UNITED STATES PATENT AND TRADEMARK OFFICE

Commissioner for Patents
United States Patent and Trademark Office
P.O. Box 1450
Alexandria, VA 22313-1450
www.uspto.gov

H. G. Bruss, Esq. - 25-LDP
Owens Illinois Inc.
One SeaGate
Toledo, OH 43666

COPY MAILED

FEB 0 6 2008

OFFICE OF PETITIONS

In re Application of
John W. SAFIAN et al.
Application No. 10/683,080
Filed: February 05, 1998
Attorney Docket No. 17295-01

DECISION ON PETITION

This is a decision on the petition under the unintentional provisions of 37 CFR 1.137(b), filed August 27, 2007, to revive the above-identified application.

The petition is **DISMISSED**.

Any request for reconsideration of this decision must be submitted within TWO (2) MONTHS from the mail date of this decision. Extensions of time under 37 CFR 1.136(a) are permitted. The reconsideration request should include a cover letter entitled "Renewed Petition under 37 CFR 1.137(b)." This is **not** a final agency action within the meaning of 5 U.S.C. § 704.

The application became abandoned for failure to reply in a timely manner to the non-final Office action, mailed September 14, 2004, which set a shortened statutory period for reply of three (3) months. No extensions of time under the provisions of 37 CFR 1.136(a) were obtained. Accordingly, the application became abandoned on December 15, 2004.

A grantable petition under 37 CFR 1.137(b) must be accompanied by: (1) the required reply, unless previously filed; (2) the petition fee as set forth in 37 CFR 1.17(m); (3) a statement that the entire delay in filing the required reply from the due date for the reply until the filing of a grantable petition pursuant to 37 CFR 1.137(b) was unintentional; and (4) any terminal disclaimer (and fee as set forth in 37 CFR 1.20(d)) required by 37 CFR 1.137(d). Where there is a question as to whether either the abandonment or the delay in filing a petition under 37 CFR 1.137 was unintentional, the Director may require additional information. *See* MPEP 711.03(c)(II)(C) and (D). The instant petition lacks item (3).

Petitioner, through the affidavit of Jodi L. Yingling (Yingling), asserts the delay was unintentional in that the patent owner had an obligation to notify the licensee if the patent owner declined to continue to prosecute the application and failed to do so. With respect to the affidavit of Yingling, it is noted Yingling does not appear to be the party having the right or authority to reply to avoid abandonment (or not reply) of the application as Yingling is neither an applicant for patent, an intervening assignee of the application, or other party in interest. While, Yingling states the patent owner had an obligation to notify the licensee if the patent owner declined to continue to prosecute the application and failed to do so, Yingling has provided no evidence of such an agreement. Moreover, there is no evidence of record that the inventors of the instant application have assigned their rights to anyone and as such they are considered to be the patent owners. In addition to statements from applicant's John W. Safian and Joseph E. Olsavsky, statements from all persons involved in the abandonment of the application including Stuart I. Smith, Howard Bruss, Robert Collins, Kavita B. Lepping, Keith G. Haddaway, James R. Burdett, James Burdett-Venable, Jeff DiPasquale, John Tobias, and John Denner and what they knew with respect to assignments, license agreements, and abandonment with respect to the application are required. Petitioner should further explain why the decision to abandon the instant application should not be binding on all parties and why the decision to abandon the instant application was not an intentional delay.

Petitioner has not shown to the satisfaction of the Director that the entire delay herein was unintentional within the meaning of 35 U.S.C. § 41(a)(7) and 37 CFR 1.137(b).

35 U.S.C. § 41(a)(7) applies to the situation of the above-identified application (i.e., to the revival of an abandoned application), however, it precludes the Director from reviving the above-identified application. The patent statute at 35 U.S.C. § 41(a)(7) authorizes the Director to revive an "unintentionally abandoned application." The legislative history of Public Law 97-247 reveals that the purpose of 35 U.S.C. § 41(a)(7) is to permit the Office to have more discretion than in 35 U.S.C. §§ 133 or 151 to revive abandoned applications in appropriate circumstances, but places a limit on this discretion, stating that "[u]nder this section a petition accompanied by either a fee of $500 or a fee of $50 would not be granted where the abandonment or the failure to pay the fee for issuing the patent was intentional as opposed to being unintentional or unavoidable."[emphasis added]. See H.R. Rep. No. 542, 97th Cong., 2d Sess. 6-7 (1982), reprinted in 1982 U.S.C.C.A.N. 770-71. The revival of an intentionally abandoned application is antithetical to the meaning and intent of the statute and regulation.

35 U.S.C. § 41(a)(7) authorizes the Commissioner to accept a petition "for the revival of an unintentionally abandoned application for a patent." As amended December 1, 1997, 37 CFR 1.137(b)(3) provides that a petition under 37 CFR 1.137(b) must be accompanied by a statement that the delay was unintentional, but provides that "[t]he Commissioner may require additional information where there is a question whether the delay was unintentional." Where there is a question whether the delay was unintentional, the petitioner must meet the burden of establishing that the delay was unintentional within the meaning of 35 U.S.C. § 41(a)(7) and 37 CFR

1.137(b). See In re Application of G, 11 USPQ2d 1378, 1380 (Comm'r Pats. 1989). Here, the showing is that applicant intentionally discontinued prosecution and permitted the application to become abandoned, due to its own conclusion that the application was similar in scope to the parent application.

The showing is further that applicant made no effort to seek revival until after becoming aware of what petitioner characterizes as an "error". The language of both 35 USC 41(a)(7) and 37 CFR 1.137(b) are clear and unambiguous, and furthermore, without qualification. That is, the delay in filing the reply during prosecution, as well as in filing the petition seeking revival, must have been, without qualification, "unintentional" for the reply to now be accepted on petition. The Office requires that the entire delay be at least unintentional as a prerequisite to revival of an abandoned application to prevent abuse and injury to the public. See H.R. Rep. No. 542, 97th Cong., 2d Sess. 7 (1982), reprinted in 1982 U.S.C.C.A.N. 771 ("[i]n order to prevent abuse and injury to the public the Commissioner . . . could require applicants to act promptly after becoming aware of the abandonment"). The December 1997 change to 37 CFR 1.137 did not create any new right to overcome an intentional delay in seeking revival, or in renewing an attempt at seeking revival, of an abandoned application. See Changes to Patent Practice and Procedure; Final Rule Notice, 62 Fed. Reg. 53131, 53160 (October 10, 1997), 1203 Off. Gaz. Pat. Office 63, 87 (October 21, 1997).

However, both the delay herein in filing the reply during prosecution, and in filing the petition after abandonment, are inconsistent with a finding that the entire delay herein was unintentional, such that revival is proper. Simply put, a course of conduct resulting in a delay that is, as here, purposefully chosen does not qualify as unintentional delay.

It is further noted that 35 U.S.C. § 41(a)(7) does not require an affirmative finding that the delay was intentional, but only an explanation as to why the petitioner has failed to carry his or her burden to establish that the delay was unintentional. Cf. Commissariat A. L'Energie Atomique v. Watson, 274 F.2d 594, 597, 124 USPQ 126, 128 (D.C. Cir. 1960)(35 U.S.C. § 133 does not require the Commissioner to affirmatively find that the delay was avoidable, but only to explain why the applicant's petition was unavailing); see also In re Application of G, supra (petition under 37 CFR 1.137(b) denied because the applicant failed to carry the burden of proof to establish that the delay was unintentional).

Here, while petitioner contends that the failure to reply during the pendency of the application was an "error", petitioner nevertheless did not even seek revival until there was a change in circumstance long after abandonment, i.e., until petitioner became aware that the licensee was not notified. However, a change in circumstances that occurred subsequent to the abandonment of an application does not render "unintentional" the delay resulting from a previous deliberate decision to permit an application to be abandoned. These matters simply confuse the question of whether there was a deliberate decision not to continue the prosecution of an application with why there was a deliberate decision not to continue the prosecution of an application. A delay

resulting from a deliberately chosen course of action on the part of the applicant does not become an "unintentional" delay within the meaning of 37 CFR 1.137(b) because the applicant does not consider the claims to be patentable over the references relied upon in an outstanding Office action.

While the entire record has been carefully reviewed, the showing of record is inconsistent with a finding that the entire delay herein was unintentional:

> Where the applicant deliberately permits an application to become abandoned (e.g., due to a conclusion that the claims are unpatentable, that a rejection in an Office action cannot be overcome, or that the invention lacks sufficient commercial value to justify continued prosecution), the abandonment of such application is considered to be a deliberately chosen course of action, and the resulting delay cannot be considered as "unintentional" within the meaning of 37 CFR 1.137(b). Likewise, where the applicant deliberately chooses not to seek or persist in seeking the revival of an abandoned application, or where the applicant deliberately chooses to delay seeking the revival of an abandoned application, the resulting delay in seeking revival of the abandoned application cannot be considered as "unintentional" within the meaning of 37 CFR 1.137(b). An intentional delay resulting from a deliberate course of action chosen by the applicant is not affected by: (1) the correctness of the applicant's (or applicant's representative's) decision to abandon the application or not to seek or persist in seeking revival of the application; (2) the correctness or propriety of a rejection, or other objection, requirement, or decision by the Office; or (3) the discovery of new information or evidence, or other change in circumstances subsequent to the abandonment or decision not to seek or persist in seeking revival. Obviously, delaying the revival of an abandoned application, by a deliberately chosen course of action, until the industry or a competitor shows an interest in the invention (a submarine application) is the antithesis of an "unavoidable" or "unintentional" delay. An intentional abandonment of an application, or an intentional delay in seeking either the withdrawal of a holding of abandonment in or the revival of an abandoned application, precludes a finding of unavoidable or unintentional delay pursuant to 37 CFR 1.137. See Changes to Patent Practice and Procedure; Final Rule Notice, 62 Fed. Reg. 53132 at 53158-59 (October 10, 1997), reprinted at 1203 Off. Gaz. Pat. Office, 65 at 86 (October 21, 1997) (citations omitted).

Where, as here, the applicant deliberately permits an application to become abandoned (e.g., due to a conclusion that the claims are unpatentable, that a rejection in an Office action cannot be overcome, or that the invention lacks sufficient commercial value to justify continued prosecution), the abandonment of such application is considered to be a deliberately chosen course of action, and the resulting delay cannot be considered as "unintentional" within the meaning of 37 CFR 1.137(b). See In re Application of G, supra. An intentional course of action is not rendered unintentional when, upon reconsideration, the applicant changes his or her mind

as to the course of action that should have been taken. See In re Maldague, 10 USPQ2d 1477, 1478 (Comm'r Pat. 1988).

Any renewed petition may be addressed as follows:

By Mail:
Mail Stop PETITION
Commissioner for Patents
P. O. Box 1450
Alexandria, VA 22313-1450

By hand:
U. S. Patent and Trademark Office
Customer Service Window, Mail Stop Petitions
Randolph Building
401 Dulany Street
Alexandria, VA 22314

The centralized facsimile number is **(571) 273-8300.**

Correspondence regarding this decision may also be filed through the electronic filing system of the USPTO.

Telephone inquiries concerning this decision should be directed to the undersigned at (571) 272-4231.

Michelle R. Eason
Paralegal Specialist
Office of Petitions

SPE RESPONSE FOR CERTIFICATE OF CORRECTION

DATE : July 6, 2006

Paper No.: _____

TO SPE OF : ART UNIT 1753

SUBJECT : Request for Certificate of Correction for Appl. No.: 10/683088 Patent No.:7,041,342 B2

Please respond to this request for a certificate of correction within 7 days.

Please review the requested changes/corrections as shown in the **COCIN** document(s) in the IFW application image. No new matter should be introduced, nor should the scope or meaning of the claims be changed.

Please complete the response (see below) and forward the completed response to scanning using document code **COCX**.

Elisha Evans
Certificates of Correction Branch

703-308-9390 ext. *110*

Thank You For Your Assistance

The request for issuing the above-identified correction(s) is hereby:
Note your decision on the appropriate box.

- ☒ **Approved** — All changes apply.
- ☐ **Approved in Part** — Specify below which changes **do not** apply.
- ☐ **Denied** — State the reasons for denial below.

Comments: _____

Nam Nguyen
SPE

1753
Art Unit

10/27/06

UNITED STATES PATENT AND TRADEMARK OFFICE

COMMISSIONER FOR PATENTS
UNITED STATES PATENT AND TRADEMARK OFFICE
P.O. BOX 1450
ALEXANDRIA, VA 22313-1450
www.uspto.gov

JORDAN AND HAMBURG, LLP
122 EAST 42ND STREET
SUITE 4000
NEW YORK, NY 10168

COPY MAILED

SEP 29 2006

OFFICE OF PETITIONS

In re Application of	:	
Dieter Sahm	:	
Application No. 10/683,089	:	DECISION GRANTING
Filed: October 10, 2003	:	PETITION
Attorney Docket No. F-7971	:	

This is a decision on the petition under 37 CFR 1.181 filed October 27, 2005, which is being treated as a petition under 37 CFR 1.10(d), requesting that the above-identified application be accorded a filing date of October 10, 2003, rather than the presently accorded date of October 9, 2003.

Petitioner alleges that the application was deposited in Express Mail Service on October 10, 2003. In support, the petition is accompanied by a copy of Express Mail receipt No. EV 331514763 US, which shows a date in of October 10, 2003, and a copy of the USPS receipt date stamp of October 10, 2003. It is also noted that the postcard receipt contained a date stamp by the USPTO on October 10, 2003. However, for some unknown reason the Office mistakenly accorded the above application a filing date of October 9, 2003.

Since it is clear that this application was in fact deposited with the Express Mail Service on October 10, 2003, the petition is **GRANTED**. A corrected filing receipt with the filing date of October 10, 2003 accompanies this decision.

This application file is being referred to the Office of Initial Patent Examination (OIPE) **for processing with a filing date of October 10, 2003**.

Telephone inquiries relating to this decision should be directed to Andrea Smith at (571) 272-3226. Telephone inquiries related to OIPE processing should be directed to their hotline at (571) 272-4000.

Frances Hicks
Petitions Examiner
Office of Petitions

Enclosure: Corrected Filing Receipt

UNITED STATES PATENT AND TRADEMARK OFFICE

UNITED STATES DEPARTMENT OF COMMERCE
United States Patent and Trademark Office
Address: COMMISSIONER FOR PATENTS
P.O. Box 1450
Alexandria, Virginia 22313-1450
www.uspto.gov

APPL NO.	FILING OR 371 (c) DATE	ART UNIT	FIL FEE REC'D	ATTY.DOCKET NO	DRAWINGS	TOT CLMS	IND CLMS
10/683,089	10/10/2003	3724	1070	F-7971	5	8	1

CONFIRMATION NO. 1472

CORRECTED FILING RECEIPT

OC000000020633469

000028107
JORDAN AND HAMBURG LLP
122 EAST 42ND STREET
SUITE 4000
NEW YORK, NY 10168

Date Mailed: 09/28/2006

Receipt is acknowledged of this regular Patent Application. It will be considered in its order and you will be notified as to the results of the examination. Be sure to provide the U.S. APPLICATION NUMBER, FILING DATE, NAME OF APPLICANT, and TITLE OF INVENTION when inquiring about this application. Fees transmitted by check or draft are subject to collection. Please verify the accuracy of the data presented on this receipt. **If an error is noted on this Filing Receipt, please mail to the Commissioner for Patents P.O. Box 1450 Alexandria Va 22313-1450. Please provide a copy of this Filing Receipt with the changes noted thereon. If you received a "Notice to File Missing Parts" for this application, please submit any corrections to this Filing Receipt with your reply to the Notice. When the USPTO processes the reply to the Notice, the USPTO will generate another Filing Receipt incorporating the requested corrections (if appropriate).**

Applicant(s)

Dieter Sahm, Ingelbach, GERMANY;

Assignment For Published Patent Application

LTS Lohmann Therapie-Systeme AG, Andernach, GERMANY

Power of Attorney:

C Hamburg--22389
Herbert Ruschmann--35341

Domestic Priority data as claimed by applicant

This application is a CON of 09/555,990 06/07/2000 PAT 6,658,973
which is a 371 of PCT/EP98/07505 11/21/1998

Foreign Applications

GERMANY 197 55 058.4 12/11/1997

If Required, Foreign Filing License Granted: 01/15/2004

The country code and number of your priority application, to be used for filing abroad under the Paris Convention, is US10/683,089

Projected Publication Date: Not Applicable

Non-Publication Request: No

Early Publication Request: No

Title

DEVICE FOR TRANSFERRING TWO-DIMENSIONAL PRODUCTS ONTO A TRANSPORTATION DEVICE

Preliminary Class

083

PROTECTING YOUR INVENTION OUTSIDE THE UNITED STATES

Since the rights granted by a U.S. patent extend only throughout the territory of the United States and have no effect in a foreign country, an inventor who wishes patent protection in another country must apply for a patent in a specific country or in regional patent offices. Applicants may wish to consider the filing of an international application under the Patent Cooperation Treaty (PCT). An international (PCT) application generally has the same effect as a regular national patent application in each PCT-member country. The PCT process **simplifies** the filing of patent applications on the same invention in member countries, but **does not result** in a grant of "an international patent" and does not eliminate the need of applicants to file additional documents and fees in countries where patent protection is desired.

Almost every country has its own patent law, and a person desiring a patent in a particular country must make an application for patent in that country in accordance with its particular laws. Since the laws of many countries differ in various respects from the patent law of the United States, applicants are advised to seek guidance from specific foreign countries to ensure that patent rights are not lost prematurely.

Applicants also are advised that in the case of inventions made in the United States, the Director of the USPTO must issue a license before applicants can apply for a patent in a foreign country. The filing of a U.S. patent application serves as a request for a foreign filing license. The application's filing receipt contains further information and guidance as to the status of applicant's license for foreign filing.

Applicants may wish to consult the USPTO booklet, "General Information Concerning Patents" (specifically, the section entitled "Treaties and Foreign Patents") for more information on timeframes and deadlines for filing foreign patent applications. The guide is available either by contacting the USPTO Contact Center at 800-786-9199, or it can be viewed on the USPTO website at http://www.uspto.gov/web/offices/pac/doc/general/index.html.

For information on preventing theft of your intellectual property (patents, trademarks and copyrights), you may wish to consult the U.S. Government website, http://www.stopfakes.gov. Part of a Department of Commerce initiative, this website includes self-help "toolkits" giving innovators guidance on how to protect intellectual property in specific countries such as China, Korea and Mexico. For questions regarding patent enforcement issues, applicants may call the U.S. Government hotline at 1-866-999-HALT (1-866-999-4158).

LICENSE FOR FOREIGN FILING UNDER
Title 35, United States Code, Section 184
Title 37, Code of Federal Regulations, 5.11 & 5.15

GRANTED

The applicant has been granted a license under 35 U.S.C. 184, if the phrase "IF REQUIRED, FOREIGN FILING LICENSE GRANTED" followed by a date appears on this form. Such licenses are issued in all applications where the conditions for issuance of a license have been met, regardless of whether or not a license may be required as set forth in 37 CFR 5.15. The scope and limitations of this license are set forth in 37 CFR 5.15(a) unless an earlier license has been issued under 37 CFR 5.15(b). The license is subject to revocation upon written notification. The date indicated is the effective date of the license, unless an earlier license of similar scope has been granted under 37 CFR 5.13 or 5.14.

This license is to be retained by the licensee and may be used at any time on or after the effective date thereof unless it is revoked. This license is automatically transferred to any related applications(s) filed under 37 CFR 1.53(d). This license is not retroactive.

The grant of a license does not in any way lessen the responsibility of a licensee for the security of the subject matter as imposed by any Government contract or the provisions of existing laws relating to espionage and the national security or the export of technical data. Licensees should apprise themselves of current regulations especially with respect to certain countries, of other agencies, particularly the Office of Defense Trade Controls, Department of State (with respect to Arms, Munitions and Implements of War (22 CFR 121-128)); the Bureau of Industry and Security, Department of Commerce (15 CFR parts 730-774); the Office of Foreign Assets Control, Department of Treasury (31 CFR Parts 500+) and the Department of Energy.

NOT GRANTED

No license under 35 U.S.C. 184 has been granted at this time, if the phrase "IF REQUIRED, FOREIGN FILING LICENSE GRANTED" DOES NOT appear on this form. Applicant may still petition for a license under 37 CFR 5.12, if a license is desired before the expiration of 6 months from the filing date of the application. If 6 months has lapsed from the filing date of this application and the licensee has not received any indication of a secrecy order under 35 U.S.C. 181, the licensee may foreign file the application pursuant to 37 CFR 5.15(b).

UNITED STATES PATENT AND TRADEMARK OFFICE

COMMISSIONER FOR PATENTS
UNITED STATES PATENT AND TRADEMARK OFFICE
P.O. BOX 1450
ALEXANDRIA, VA 22313-1450
www.uspto.gov

MAY 18 2004

MAILED

MAY 18 2004

OFFICE OF THE DIRECTOR
TC 3600

Head, Johnson & Kachigian
228 W 17th Place
Tulsa, OK 74119

In re application of
Stephan M. Crow
Application No. 10/683095
Filed: October 10, 2003
For: COMBINATION MASTER LINK AND CHAIN SHORTENER

DECISION ON PETITION TO MAKE SPECIAL (ACCELERATED EXAMINATION)

This is in response to the petition filed on October 10, 2003 to make the above-identified application special on the basis of special examining procedure for certain new applications - accelerated examination as set forth in MPEP § 708.02 VIII.

The requirements for granting special status under this section are: (A) a petition to make special accompanied by the fee set forth in 37 CFR 1.17(i); (B) all claims being directed to a single invention, or an election without traverse if the Office determines that all the claims are not directed to a single invention; (C) a statement that a pre-examination search was made listing the field of search; (D) one copy of each of the references deemed most closely related to the subject matter encompassed by the claims if said references are not already of record; and (E) a detailed discussion of how the claimed subject matter is patentable over the references in accordance with 37 CFR 1.111 (b) and (c).

The petition fails to adequately meet requirement (E) above. The petition does provide a general discussion of the cited references; however, the discussion does not make it clear how the claimed invention is patentable over the cited references in accordance with 37 CFR 1.111(b) and (c). Applicant has not specifically indicated the claim language that distinguishes the claimed invention over the cited prior art. Applicant is required to provide a more detailed discussion of how the claimed subject matter is patentable over each of these references.

For the above stated reasons, the petition is **DISMISSED**.

Petitioner is given one more opportunity to perfect the petition. Any request for reconsideration must be filed within TWO MONTHS of the date of this decision. Extensions of time under 37 CFR 1.136(a) are permitted.

SUMMARY: Petition to Make Special **DISMISSED**.

Applicant should promptly submit a renewed petition to the Commissioner of Patents and Trademarks, Washington, D.C. 20231. The envelope should indicate that the correspondence be brought to the attention of Technology Center 3600.

Until the renewed petition is submitted, the application will be returned to the examiner's docket to await treatment on the merits in the normal order of examination.

Steven N. Meyers
Special Programs Examiner
Technology Center 3600
(703) 308-3868

SNM/vdb: 5/6/04

UNITED STATES PATENT AND TRADEMARK OFFICE

COMMISSIONER FOR PATENTS
UNITED STATES PATENT AND TRADEMARK OFFICE
P.O. BOX 1450
ALEXANDRIA, VA 22313-1450
www.uspto.gov

AUG - 4 2004

MAILED

AUG 4 2004

OFFICE OF THE DIRECTOR
TC 3600

Head, Johnson & Kachigian
228 W 17th Place
Tulsa, OK 74119

In re application of : **DECISION ON PETITION**
Stephan M. Crow : **TO MAKE SPECIAL**
Application No. 10/683,095 : **(ACCELERATED**
Filed: October 10, 2003 : **EXAMINATION)**
For: COMBINATION MASTER LINK AND CHAIN :
SHORTENER

This is in response to the renewed petition filed on June 14, 2004 to make the above-identified application special on the basis of special examining procedure for certain new applications - accelerated examination as set forth in MPEP § 708.02 VIII.

The requirements for granting special status under this section are: (A) a petition to make special accompanied by the fee set forth in 37 CFR 1.17(i); (B) all claims being directed to a single invention, or an election without traverse if the Office determines that all the claims are not directed to a single invention; (C) a statement that a pre-examination search was made listing the field of search; (D) one copy of each of the references deemed most closely related to the subject matter encompassed by the claims if said references are not already of record; and (E) a detailed discussion of how the claimed subject matter is patentable over the references in accordance with 37 CFR 1.111 (b) and (c).

The renewed petition filed on June 14, 2004 included a detailed discussion of how the claimed subject matter is patentable over the references in accordance with 37 CFR 1.111 (b) and (c).

Since all of the requirements for special status under MPEP § 708.02 VIII have been met, the petition is **GRANTED**.

The examiner is directed (1) to make an interference search for possible interfering applications, (2) to promptly examine this application out of turn, and (3) if any interfering application is discovered, to examine such application simultaneously and state in the first official letter of such application that it is being taken out of turn because of a possible interference.

Petitioner is advised that this application will continue to be special, throughout its entire prosecution and pendency, including interference or appeal, if any, only if petitioner makes a prompt ***bona fide*** effort, in response to each Office action, to place the application in condition for allowance, even if it is necessary to conduct an interview with the examiner to accomplish this purpose.

Kenneth J. Dorner
Special Programs Examiner
Technology Center 3600
(703) 308-0866

KJD/vdb: 7/26/04

UNITED STATES PATENT AND TRADEMARK OFFICE

Commissioner for Patents
United States Patent and Trademark Office
P.O. Box 1450
Alexandria, VA 22313-1450
www.uspto.gov

Paper No.

FOLEY AND LARDNER LLP
SUITE 500
3000 K STREET NW
WASHINGTON DC 20007

COPY MAILED

APR 0 3 2006

OFFICE OF PETITIONS

In re Patent No. 6,906,477	:	
Kazanov et al.	:	ON REQUEST
Application No. 10/683,110	:	FOR RECONSIDERATION OF
Filed: October 14, 2003	:	PATENT TERM ADJUSTMENT
Atty Docket No. 061978-0103	:	

This is in response to the "LETTER TO PTO RE: PATENT TERM ADJUSTMENT," filed June 8, 2005. Patentees request correction of the patent term adjustment indicated on the Issue Notification (and on the patent) from zero (0) days to forty-five (45) days.

The request is **DISMISSED**.

Patentees are advised that § 1.705(d) provides the avenue before the Office for requesting reconsideration of the patent term adjustment indicated in the patent (or in the Issue Notification)[1]. See § 1.702-1.705. Moreover, § 1.705(d) states that "any request for reconsideration of the patent term adjustment indicated in the patent must be filed within two months of the date the patent issued and must comply with the requirements of paragraphs (b)(1) and (b)(2) of this section." Paragraph (b)(1) requires that the request be accompanied by:

(1) The fee set forth in § 1.18(e) ...

[1] The Issue Notification provides notice of the patent term adjustment intended to be indicated in the patent (if it issues on the projected issue date).

The instant request was filed within 2 months of the issue date of the patent. However, neither the fee under § 1.18(e) nor a general authorization to charge any required fees, accompanied the request. Accordingly, the request is dismissed for failure to comply with the requirement of paragraph (b)(1) to submit the fee under §1.18(e).

For purposes of clarification, it is noted that the patent issued with a revised patent term adjustment (PTA) of 0 days because the PTA of 45 days was reduced by 100 days pursuant to § 1.704(c)(10) for patentees filing of drawings after the mailing of the notice of allowance.

Patentees are given **TWO (2) MONTHS** from the mailing date of this decision to pay the required fee and request reconsideration on the merits (or otherwise, request reconsideration of this decision). This period is not extendable under § 1.136(a).

Telephone inquiries specific to this matter should be directed to the undersigned at (571) 272-3219.

Nancy Johnson
Senior Petitions Attorney
Office of Petitions

UNITED STATES PATENT AND TRADEMARK OFFICE

Commissioner for Patents
United States Patent and Trademark Office
P.O. Box 1450
Alexandria, VA 22313-1450
www.uspto.gov

NIXON PEABODY, LLP
401 9TH STREET, NW
SUITE 900
WASHINGTON, DC 20004-2128

COPY MAILED

NOV 13 2006

OFFICE OF PETITIONS

In re Application of Inagaki et al. :
Application No. 10/683,111 : Decision on Petition
Filing Date: October 14, 2003 :
Attorney Docket No. 740165-364 :

This is a decision on the petition under 37 CFR 1.181, filed November 24, 2004, and supplemented October 26, 2006, to withdraw the holding of abandonment.

The petition is **granted.**

A Notice to File Missing Parts of Application (Notice) was mailed January 21, 2004. The Notice set a period for reply of two (2) months from the mail date of the Notice. A Notice of Abandonment was mailed November 17, 2004. The Notice of Abandonment stated a reply was not received in response to the Notice to File Missing Parts.

Petitioner contends a reply was timely filed Monday, March 22, 2004. In support, petitioner states a copy of a postcard reply has been filed. The copy of the postcard receipt cannot be located in the file. However, the postcard receipt is unnecessary since petitioner has supplied a showing in compliance with 37 CFR 1.8(b). The Notice of Abandonment is hereby vacated and the holding of abandonment withdrawn.

The file does not indicate a change of address has been submitted, although the address given on the petition differs from the address of record. A courtesy copy of this decision is being mailed to the address given on the petition; however, absent a request to change the address of record, the Office will mail all future correspondence solely to the address of record.

The Office of Initial Patent Examination will be informed of the instant decision and will take steps to prepare the application for examination in due course.

Telephone inquiries regarding this communication should be directed to Petitions Attorney Steven Brantley at (571) 272-3203.

Charles Steven Brantley
Senior Petitions Attorney
Office of Petitions

cc: Thomas W. Cole
Roberts Miotkowski & Hobbes
PO Box 10064
McLean, VA 22102

UNITED STATES PATENT AND TRADEMARK OFFICE

Commissioner for Patents
United States Patent and Trademark Office
P.O. Box 1450
Alexandria, VA 22313-1450
www.uspto.gov

GOUDREAU GAGE DUBUC
2000 MCGILL COLLEGE
SUITE 2200
MONTREAL QC H3A 3H3 CA CANADA

MAILED

JUL 21 2009

OFFICE OF PETITIONS

In re Application of :
Vardaro, et al. :
Application No. 10/683,115 : ON PETITION
Filed: October 14, 2003 :
Attorney Docket No. 771/12836.11 :
For: DISPLAY ASSEMBLY

This is a decision on the petition under 37 CFR 1.181, filed January 2, 2009, requesting that the Office withdraw the holding of abandonment of the above-identified application.

The petition under 37 CFR 1.181 is **GRANTED**.

This application was held abandoned for failure to respond in a proper manner to the final Office action, mailed July 27, 2007, which set forth an extendable three (3) month period for reply. Applicants filed a response accompanied by a one month extension of time on November 27, 2007. A Notice of Abandonment was mailed on January 2, 2009.

Petitioners request withdrawal of the holding of abandonment based on the assertion that the November 27, 2007 was a proper, timely filed reply to the July 27, 2007 final Office action.
The Office concurs. Applicants' amendment appears to have fulfilled all of the requirements set by the final action.

The petition under 37 CFR 1.181 is **granted**, the holding of abandonment is withdrawn, and the January 2, 2009 Notice of Abandonment is **vacated**. No petition fee has been or will be charged in connection with this matter.

Accordingly, the application file will be returned to Technology Center A.U. 3632 for further examination.

Telephone inquiries pertaining to this matter may be directed to the undersigned at (571) 272-3230.

Shirene Willis Brantley

Shirene Willis Brantley
Senior Petitions Attorney
Office of Petitions

UNITED STATES PATENT AND TRADEMARK OFFICE

COMMISSIONER FOR PATENTS
UNITED STATES PATENT AND TRADEMARK OFFICE
P.O. BOX 1450
ALEXANDRIA, VA 22313-1450
WWW.USPTO.GOV

Paper No. None

KOLISCH HARTWELL, P.C.
520 S.W. YAMHILL STREET
SUITE 200
PORTLAND OR 97204

COPY MAILED

SEP 0 7 2004

OFFICE OF PETITIONS

In re Application of :
Daniel C. Evans et al. :
Application No. 10/683,140 :
Filed: October 9, 2003 :
Attorney Docket No.: LEU 302A1 :
Title: HOSE COUPLING DEVICE :

DECISION ON PETITION

This is a decision on the petition under 37 CFR § 1.137(b)[1], filed August 20, 2004, to revive the above-identified application.

The above-identified application became abandoned for failure to reply in a timely manner to the Notice of Missing Parts (notice), mailed January 7, 2004, which set a shortened statutory period for reply of two (2) months. The Notice set forth that a properly executed oath or declaration, along with the $65.00 surcharge associated with the late submission of the same would be required. No response was received, and no extensions of time under the provisions of 37 C.F.R. §1.136(a) were requested. Accordingly, the above-identified application became abandoned on April 8, 2004.

With the instant petition, Petitioner has met the requirements to revive the above-identified application, pursuant to 37 CFR 1.137(b). Petitioner submitted the required reply in the form of the filing of the petition fee, the submission of a declaration along with the associated surcharge, and has made the proper statement of unintentional delay.

The petition is **GRANTED**.

---

1 A grantable petition pursuant to 37 CFR 1.137(b) must be accompanied by:

(1) The reply required to the outstanding Office action or notice, unless previously filed;

(2) The petition fee as set forth in § 1.17(m);

(3) A statement that the entire delay in filing the required reply from the due date for the reply until the filing of a grantable petition pursuant to this paragraph was unintentional. The Commissioner may require additional information where there is a question whether the delay was unintentional, and;

(4) Any terminal disclaimer (and fee as set forth in § 1.20(d)) required pursuant to paragraph (d) of this section.

After this decision is mailed, the application will be forwarded to Technology Center 3600 for further processing.

Telephone inquiries regarding this decision should be directed to the undersigned at (703) 305-0011. Please note that on approximately September 28, 2004, the Office of Petitions will relocate to the new PTO location in Alexandria. Although the mailing address will remain the same, the general phone number for the Office of Petitions which should be used for status requests will change to 571-272-3282, and the telephone number for the undersigned will change to 571-272-3225.

Paul Shanoski
Senior Attorney
Office of Petitions
United States Patent and Trademark Office

UNITED STATES PATENT AND TRADEMARK OFFICE

Commissioner for Patents
United States Patent and Trademark Office
P.O. Box 1450
Alexandria, VA 22313-1450
www.uspto.gov

HEWLETT PACKARD COMPANY
P O BOX 272400, 3404 E. HARMONY ROAD
INTELLECTUAL PROPERTY ADMINISTRATION
FORT COLLINS CO 80527-2400

7/18/08

In re Application of:
DEVOS, JOHN A.
Serial No.: 10/683,150
Filed: October 9, 2003
Docket: 200301160-1
Title: FUEL STORAGE DEVICES AND APPARATUS INCLUDING THE SAME

DECISION ON PETITION FOR REVIEW OF ELECTION OF SPECIES REQUIREMENT

This is a decision on the petition filed on June 2, 2008 by which petitioner requests either a withdrawal of election of species requirement to examine all claims or correct the election of species requirement. This petition is considered as if pursuant to 37 CFR 1.144 and 37 CFR 1.181, and no fee is required.

The petition is **DISMISSED AS PREMATURE**.

The record shows that:

1) On May 2, 2008 the examiner issued a final Office Action presenting an election of species requirement. Claims 75-82 were alleged as independent or distinct from the invention originally claimed and examined according to the examiner. In this Office Action, the examiner identified three species: (1) a fuel storage device including a resistive heater, (2) a fuel storage device including a heat exchanger/heat pipe, and (3) a fuel storage device including a heat generating fuel cell. In addition, the examiner stated that the species were mutually exclusive of each other. As a result, claims 75-82 are withdrawn from consideration under constructive election as being directed to a non-elected invention in accordance with MPEP §821.03.

2) On June 2, 2008, the applicant responded with a petition to review the election of species requirement. Petitioner argues that the three species are not identified to correspond to the original figures or claims. In addition, no rationale is provided as to why the species are independent or distinct.

Discussion and Analysis

A review of the record reveals that on May 2, 2008, the examiner issued an election of species requirement. The three species listed above are allegedly mutually exclusive as stated in the Office Action. However, as described in the specification on pages 3 and 5, species 2 and 3 are both illustrated in Figure 4. The contents of Species 1 is found in Figure 10 but according to the specification on page 6, these "other types of fuel heating arrangements" are "way of example, but not limitation." In addition, the specification states that "such a fuel heater may be used instead of, or in combination with, the exemplary fuel heater."

It appears from the record that the species as identified by the examiner in the Office Action on May 2, 2008 is not mutually exclusive. Since the examiner did not have a chance to repeat the restriction in the Office Action on May 2, 2008, then, the petition is hereby dismissed as premature in accordance with 37 CFR 1.181(c)[1].

Conclusion

For the reasons outlined above, petitioner's request to withdraw the election of species requirement cannot be granted. The examiner is directed to reconsider the election of species requirement as stated in the May 2, 2008 Office Action in view of the timeliness of the petition prior to a final restriction by the examiner.

The application is being forwarded to Supervisory Patent Examiner of Art Unit ~~3729~~ 3742 for further processing. Any inquiry regarding this decision should be directed to Henry Yuen, Special Programs Examiner, at (571) 272-4856.

The petition is DISMISSED AS PREMATURE.

Frederick R. Schmidt, Director
Technology Center 3700

[1] 37 CFR 1.181(c) When a petition is taken from an action or requirement of an examiner in the ex parte prosecution of an application, or in the ex parte or inter partes prosecution of a reexamination proceeding, it may be required that there have been a proper request for reconsideration (§ 1.111) and a repeated action by the examiner. The examiner may be directed by the Director to furnish a written statement, within a specified time, setting forth the reasons for his or her decision upon the matters averred in the petition, supplying a copy to the petitioner.

UNITED STATES PATENT AND TRADEMARK OFFICE

Commissioner for Patents
United States Patent and Trademark Office
P.O. Box 1450
Alexandria, VA 22313-1450
www.uspto.gov

EITAN, PEARL, LATZER & COHEN ZEDEK LLP
10 ROCKEFELLER PLAZA, SUITE 1001
NEW YORK NY 10020

COPY MAILED

JUN 2 2 2004

OFFICE OF PETITIONS

In re Application of	:	
Dalton, et al.	:	
Application No. 10/683,156	:	DECISION ON
Filed: October 14, 2003	:	PETITION
Attorney Docket No. P-5235-US12	:	
For: METHOD FOR DETECTING SELECTIVE ANDROGEN RECEPTOR MODULATORS	:	

This is a decision on the petition entitled, " PETITION IN RESPONSE TO NOTICE OF INCOMPLETE NONPROVISIONAL APPLICATION"," filed April 22, 2004, requesting in effect, withdrawal of the Notice of Incomplete Nonprovisional Application, mailed February 25, 2004, and accordation of a October 14, 2003 filing date to the above-identified application.

The application was deposited on October 14, 2003. On February 25, 2004, the Office of Initial Patent Examination mailed a Notice informing petitioners, *inter alia*, that no filing date had been accorded to the application papers deposited on October 14, 2003 because no drawing was present, as is required by 35 USC 113, despite the fact that a drawing was referenced in the specification.

In response to the Notice, petitioners timely filed the present petition.

It is noted that the above-identified application contains method claims. As stated in MPEP 601.01(f), it is the practice of the USPTO to treat an application that contains at least one process or method claim as an application for which a drawing is not necessary for an understanding of the invention under 35 USC 113 (first sentence.)

MPEP 601.01(f) also states that:

> A nonprovisional application having at least one claim, or a provisional application having at least some disclosure, directed to the subject matter discussed above for which a drawing is usually not considered essential for a filing date, describing drawing figures in the specification, but filed without

drawings will be treated as an application filed without all of the drawing figures referred to in the specification as discussed in MPEP 601.01(g), so long as the application contains something that can be construed as a written description.

This application contains method claims. Therefore, the above-identified application should have been treated as an application filed without all of the drawing figures referred to in the specification as discussed in MPEP 601.01(g).

MPEP 601.01(g) states that if an application is filed without all of the drawing figures referred to in the specification, a "Notice of Omitted Items" is mailed indicating that the application has been accorded a filing date.

In view of the above, the "Notice" mailed February 25, 2004 was mailed in error and is hereby withdrawn. The petition is **granted**. Petitioners' deposit account no. 05-0649 will be credited the $130.00 petition fee submitted with the present petition.

Petitioners should file an amendment canceling the references to the omitted figure prior to the first Office action in order to avoid further delays in the examination of the application.

The application is being returned to the Office of Initial Patent Examination for further processing with a filing date of **October 14, 2003**.

Telephone inquiries specific to this matter should be directed to the undersigned at (703) 308-6712.

E. Shirene Willis
Senior Petitions Attorney
Office of Petitions
Office of the Deputy Commissioner
for Patent Examination Policy

UNITED STATES PATENT AND TRADEMARK OFFICE

COMMISSIONER FOR PATENTS
UNITED STATES PATENT AND TRADEMARK OFFICE
P.O. BOX 1450
ALEXANDRIA, VA 22313-1450
WWW.USPTO.GOV

Paper No. None

MINTZ, LEVIN, COHN, FERRIS, GLOVSKY
AND POPEO, P.C.
ONE FINANCIAL CENTER
BOSTON MA 02111

COPY MAILED

JUL 0 5 2006

OFFICE OF PETITIONS

In re Application of :
Arthur B. Pardee et al. :
Application No. 10/683,199 :
Patent No. 6,875,745 :
Filed: October 9, 2003 :
Issue Date: April 5, 2005 :
Attorney Docket No. 22596-533 CON :
Title: METHOD AND COMPOSITION FOR :
THE TREATMENT OF CANCER :

DECISION ON PETITION
UNDER 37 C.F.R. §1.28(c)

This is a notice regarding your request for acceptance of a fee deficiency submission under 37 CFR §1.28. On September 1, 1998, the Court of Appeals for the Federal Circuit held that 37 CFR §1.28(c) is the sole provision governing the time for correction of the erroneous payment of the issue fee as a small entity. See DH Technology v. Synergystex International, Inc. 154 F.3d 1333, 47 USPQ2d 1865 (Fed. Cir. Sept. 1, 1998).

The Office no longer investigates or rejects original or reissue applications under 37 CFR §1.56. 1098 Off. Gaz. Pat. Office 502 (January 3, 1989). Therefore, nothing in this notice is intended to imply that an investigation was done.

Your fee deficiency submission under 37 CFR §1.28 is hereby accepted. The petition is **GRANTED** accordingly.

Telephone inquiries regarding *this decision* should be directed to the undersigned at (571) 272-3225.

Paul Shanoski
Senior Attorney
Office of Petitions
United States Patent and Trademark Office

UNITED STATES PATENT AND TRADEMARK OFFICE

Commissioner for Patents
United States Patent and Trademark Office
P.O. Box 1450
Alexandria, VA 22313-1450
www.uspto.gov

MAY - 4 2005

In re Application of:
Mark Klein
Application No. 10/683,246
Filed: October 10, 2003
For: MODULAR SHOE SYSTEM

DECISION ON PETITION

This is a decision on the petition to make special filed October 25, 2004. The petition is submitted pursuant to the practice established in MPEP § 708.02(II) "Infringement." The $130.00 petition fee has been received.

The petition is granted.

A review of the petition shows that petitioner has satisfied all of the requirements of the above-cited MPEP section. Accordingly, the examiner will treat this application as special throughout its prosecution. Prior to the first action on the merits, the examiner will conduct a rigorous search for potentially interfering applications. The interference search will be brought up to date prior to each successive action.

The Supervisory Patent Examiner of Patent Examining Art Unit 3728 will be notified of this decision, and will inform the assigned examiner to take action not inconsistent therewith.

PETITION GRANTED.

Richard A. Bertsch, Director
Technology Center 3700

Guy Perry
Skadden, Arps, Slate, Meagher & Flom, LLP
Four Times Square
New York, NY 10036

UNITED STATES PATENT AND TRADEMARK OFFICE

Commissioner for Patents
United States Patent and Trademark Office
P.O. Box 1450
Alexandria, VA 22313-1450
www.uspto.gov

KEITH GEORGE
MCDERMOTT, WILL & EMERY
600 13TH STREET, N.W.
WASHINGTON DC 20005

COPY MAILED

SEP 26 2005

OFFICE OF PETITIONS

In re Application of :
Herman G. Skadow et al :
Application No. 10/683,254 :
Filed: October 10, 2003 :
Attorney Docket No. 63288-646 :

ON PETITION

This is a decision on the petition, filed September 19, 2005, under 37 CFR 1.313(c)(2) to withdraw the above-identified application from issue after payment of the issue fee.

The petition is **GRANTED.**

The above-identified application is withdrawn from issue for consideration of a submission under 37 CFR 1.114 (request for continued examination). See 37 CFR 1.313(c)(2).

Petitioner is advised that the issue fee paid on August 3, 2005, in the above-identified application cannot be refunded. If, however, the above-identified application is again allowed, petitioner may request that it be applied towards the issue fee required by the new Notice of Allowance.[1]

Telephone inquiries should be directed to the undersigned at (571) 272-3208.

The examiner of Technology Center AU 3653 will consider the request for continued examination under 37 CFR 1.114.

Karen Creasy

Karen Creasy
Petitions Examiner
Office of Petitions
Office of the Deputy Commissioner
for Patent Examination Policy

---

[1] The request to apply the issue fee to the new Notice may be satisfied by completing and returning the new Issue Fee Transmittal Form PTOL-85(b), which includes the following language thereon: "Commissioner for Patents is requested to apply the Issue Fee and Publication Fee (if any) or re-apply any previously paid issue fee to the application identified above." Petitioner is advised that, whether a fee is indicated as being due or not, the Issue Fee Transmittal Form **must** be completed and timely submitted to avoid abandonment. Note the language in bold text on the first page of the Notice of Allowance and Fee(s) Due (PTOL-85).

UNITED STATES PATENT AND TRADEMARK OFFICE

Commissioner for Patents
United States Patent and Trademark Office
P.O. Box 1450
Alexandria, VA 22313-1450
www.uspto.gov

Paper No.

Robert J. Walters
SUTHERLAND ASBILL
& BRENNAN LLP
999 Peachtree Street, NE
Atlanta GA 30309-3996

COPY MAILED

SEP 2 0 2006

OFFICE OF PETITIONS

In re Patent No. 7,052,089	:	
Teddy May	:	LETTER REGARDING
Issue Date: May 30, 2006	:	PATENT TERM ADJUSTMENT
Application No. 10/683,270	:	and
Filed: October 14, 2003	:	NOTICE OF INTENT TO ISSUE
Attorney Docket No. 23732.0001	:	CERTIFICATE OF CORRECTION

This is in response to the APPLICATION FOR PATENT TERM ADJUSTMENT RECONSIDERATION filed August 4, 2006. Pursuant to patentee's duty of good faith and candor, patentee discloses that the patent term adjustment indicated on the Issue Notification (and on the patent) should be corrected from fifty-five (55) days to thirty-seven (37) days.

The request for correction of the patent term adjustment indicated in the patent is **GRANTED**.

The patent term adjustment indicated in the patent is to be corrected by issuance of a certificate of correction showing a revised Patent Term Adjustment of thirty-seven **(37)** days.

On May 30, 2006, the above-identified application matured into U.S. Patent No. 7,052,089, with a revised Patent Term Adjustment of 55 days. Patentee discloses that a reduction of 18 days should have been entered for applicant delay in responding to the Notice to File Corrected Application Papers mailed January 15, 2004.

Patentee is correct. A review of the application file reveals that applicant's complete response to the Notice to File Corrected Application Papers mailed January 15, 2004, is of record in the application with a date of receipt by the Office of May 3, 2004. As the response was filed outside the three-month period under 37 CFR 1.704(b), there was a failure to engage in reasonable efforts to conclude prosecution. As acknowledged by patentee, a period of reduction of 18 days should have been entered for this applicant delay.

In view thereof, the patent should have issued with a revised patent term adjustment of 37 days.

As this letter was submitted as an advisement to the Office of errors in Patentee's favor, the Office will not assess the $200.00 fee under 37 CFR 1.18(e). The Office thanks patentee for their good faith and candor in bringing this to the attention of the Office.

The application file is being forwarded to the Certificates of Correction Branch for issuance of a certificate of correction in order to rectify this error. The Office will issue a certificate of correction indicating that the term of the above-identified patent is extended or adjusted by thirty-seven (37) days.

Telephone inquiries specific to this matter should be directed to the undersigned at (571) 272-3219.

Nancy Johnson
Senior Petitions Attorney
Office of Petitions

Enclosure: Copy of DRAFT Certificate of Correction

UNITED STATES PATENT AND TRADEMARK OFFICE

COMMISSIONER FOR PATENTS
UNITED STATES PATENT AND TRADEMARK OFFICE
P.O. BOX 1450
ALEXANDRIA, VA 22313-1450
WWW.USPTO.GOV

Paper No. None

OLIFF & BERRIDGE, PLC
P.O. BOX 19928
ALEXANDRIA VA 22320

COPY MAILED
APR 02 2004
OFFICE OF PETITIONS

In re Application of :
Taketoshi Hoshizaki et al. :
Application No. 10/683,279 : DECISION ON PETITION
Filed: October 14, 2003 :
Attorney Docket No. 117493 :
Title: IMAGE FORMING APPARATUS :
:

This is a decision on the petition filed February 4, 2004, requesting the application, including page eighty-seven (87) of the specification be accorded a filing date of October 14, 2003 as part of the original disclosure.

The application was deposited on October 14, 2003. However, on January 15, 2004, the Office of Initial Patent Examination (OIPE) mailed a "Notice of Omitted Item(s) in a Nonprovisional Application - Filing Date Granted" (Notice), stating that the application had been accorded a filing date of October 14, 2003 and advising applicant that page eighty-seven (87) of the specification appeared to have been omitted.

In response, on February 4, 2004, applicants filed the present petition. The petition is further accompanied by the petition fee, a copy of the missing page of the specification, and a copy of applicants' postcard receipt acknowledging receipt of "105 pp spec/10clms/abstract" in the United States Patent and Trademark Office (Office) on October 14, 2003. Applicants request that the application, including page eighty-seven (87) of the specification be accorded a filing date October 14, 2003.

Upon review of the record, the above-mentioned page of the specification has not been located among the application papers. However, the evidence is convincing that the application papers

deposited on October 14, 2003 included page eighty-seven (87) of the specification, and this page of the specification was subsequently misplaced in the Office.

Therefore, the application, including page eighty-seven (87) of the specification, was complete on filing and entitled to a filing date of October 14, 2003, as part of the original disclosure.

Accordingly, the petition is **GRANTED**.

The notice mailed January 15, 2004, was sent in error, and is hereby **VACATED**. Therefore, no petition fee is necessary, and the petition fee of $130 has been refunded to Petitioner's Deposit Account, as authorized in the petition.

The application file is being returned to the Office of Initial Patent Examination for further processing with a filing date of October 14, 2003, using the original application papers filed on that date, as well as page eighty-seven (87) of the specification, submitted with the instant petition.

Any inquiries related to this decision should be directed to Attorney Paul Shanoski at (703) 305-0011.

for D Wood

Jay Lucas
Interim Supervisory Petitions Examiner
Office of Petitions
United States Patent and Trademark Office

UNITED STATES PATENT AND TRADEMARK OFFICE

Commissioner for Patents
United States Patent and Trademark Office
P.O. Box 1450
Alexandria, VA 22313-1450
www.uspto.gov

COPY MAILED
MAY 12 2006
OFFICE OF PETITIONS

FITZPATRICK CELLA HARPER & SCINTO
30 ROCKEFELLER PLAZA
NEW YORK, NY 10112

In re Patent of Takehara :
Patent No. 6,967,415 :
Issue Date: November 22, 2005 :
Application No. 10/683,291 :
Filing Date: October 14, 2003 :
Attorney Docket No. 00862.023273 :

Decision on Request for Reconsideration of Patent Term Adjustment and Notice of Intent to Issue Certificate of Correction

This is a decision in response to the "Request for Reconsideration of Patent Term Adjustment Under 37 CFR 1.705(d)" filed January 23, 2006, which requests, in essence, that the Patent Term Adjustment for the above-identified patent be set at 186 days.

The request for reconsideration of the patent term adjustment indicated on the patent is **GRANTED**.

The patent term adjustment indicated in the patent is to be corrected by issuance of a certificate of correction showing a revised Patent Term Adjustment of one hundred and eighty-six (186) days.

On November 22, 2005, the above-identified application matured into U.S. Patent No. 6,967,415. The Patent issued with a revised Patent Term Adjustment of 104 days. The request contends that there were no circumstances within this case history that constitute a failure by the Patentees to engage in reasonable efforts to conclude processing or examination of the above-identified application as set forth in 37 CFR § 1.704. Patentee disputes the reduction of 82 days due to "Workflow-Drawings finished" as no drawings were filed after the mailing of the Notice of Allowance. The instant request for reconsideration filed Monday, January 23, 2006, was timely filed.

A review of the PALM calculations for this application reveals that the determination of PTA was reduced by 82 days for applicant's submission of drawings after the mailing of the notice of allowance. See 37 CFR 1.704(c)(10). However, a review of the application record supports a conclusion that no drawings (or any other paper, aside from the instant petition) were filed in this application after the mailing of the notice of allowance.

In view thereof, the patent term adjustment indicated in the patent should have been 186 days.

The Office acknowledges submission of the $200.00 fee set forth in 37 CFR 1.18(e). No additional fees are required.

The Certificates of Correction Branch will be notified of the instant decision and will issue a certificate of correction in order to rectify the error regarding the patent term information. The certificate of correction will indicate that the term of the above-identified patent is extended or adjusted by ONE HUNDRED EIGHTY-SIX (186) days subject to any disclaimers.

Telephone inquiries regarding this communication should be directed to Petitions Attorney Steven Brantley at (571) 272-3203.

Nancy Johnson
Senior Petitions Attorney
Office of Petitions

Enclosure: Copy of DRAFT Certificate of Correction

UNITED STATES PATENT AND TRADEMARK OFFICE

CERTIFICATE OF CORRECTION

PATENT : 6,967,415 B2

DATED : November 22, 2005

INVENTOR(S) : Nobuyoshi Takehara

It is certified that error appears in the above-identified patent and that said Letters Patent is hereby corrected as shown below:

On the cover page,

[*] Notice: Subject to any disclaimer, the term of this patent is extended or adjusted under 35 USC 154(b) by (104) days

Delete the phrase "by 104 days" and insert – by 186 days--

Day : Thursday
Date: 5/11/2006

PALM INTRANET

Time: 14:24:44

PTA Calculations for Application: 10/683291			
Application Filing Date:	10/14/2003	PTO Delay (PTO):	186
Issue Date of Patent:	11/22/2005	Three Years:	0
Pre-Issue Petitions:	0	Applicant Delay (APPL):	82
Post-Issue Petitions:	0	Total PTA (days):	186
PTO Delay Adjustment:	82		

File Contents History

Number	Date	Contents Description	PTO	APPL	START
45	05/11/2006	ADJUSTMENT OF PTA CALCULATION BY PTO	82		
41	11/22/2005	PATENT ISSUE DATE USED IN PTA CALCULATION	47		34
40	10/20/2005	RECEIPT INTO PUBS			
39	10/20/2005	RECEIPT INTO PUBS			
38	10/20/2005	DISPATCH TO FDC			
37	10/20/2005	DISPATCH TO FDC			
36	10/20/2005	APPLICATION IS CONSIDERED READY FOR ISSUE			
35	09/02/2005	WORKFLOW - DRAWINGS FINISHED		82	
34	06/06/2005	ISSUE FEE PAYMENT VERIFIED			
33	10/11/2005	RECEIPT INTO PUBS			
32	06/06/2005	ISSUE FEE PAYMENT RECEIVED			
31	06/03/2005	WORKFLOW - FILE SENT TO CONTRACTOR			
30	05/27/2005	MAIL EXAMINER'S AMENDMENT			
29	05/25/2005	EXAMINER'S AMENDMENT COMMUNICATION			
28	05/18/2005	RECEIPT INTO PUBS			
27	05/09/2005	EXPORT TO INITIAL DATA CAPTURE			
26	05/12/2005	MAIL EXAMINER'S AMENDMENT			
25	05/10/2005	EXAMINER'S AMENDMENT COMMUNICATION			
24	05/02/2005	MAIL NOTICE OF ALLOWANCE	139		-1
23	04/28/2005	ISSUE REVISION COMPLETED			
22	04/28/2005	NOTICE OF ALLOWANCE DATA VERIFICATION COMPLETED			
21	04/28/2005	CASE DOCKETED TO EXAMINER IN GAU			
20	04/28/2005	NOTICE OF ALLOWABILITY			
19	11/09/2004	REFERENCE CAPTURE ON IDS			

18	11/09/2004	INFORMATION DISCLOSURE STATEMENT (IDS) FILED			
17	05/14/2004	IFW TSS PROCESSING BY TECH CENTER COMPLETE			
16	05/14/2004	REFERENCE CAPTURE ON IDS			
15	04/06/2004	INFORMATION DISCLOSURE STATEMENT (IDS) FILED			
14	02/17/2004	REFERENCE CAPTURE ON IDS			
13	02/17/2004	INFORMATION DISCLOSURE STATEMENT (IDS) FILED			
12	02/19/2004	IFW TSS PROCESSING BY TECH CENTER COMPLETE			
11	02/13/2004	IFW TSS PROCESSING BY TECH CENTER COMPLETE			
10	02/13/2004	CASE DOCKETED TO EXAMINER IN GAU			
9	01/14/2004	REQUEST FOR FOREIGN PRIORITY (PRIORITY PAPERS MAY BE INCLUDED)			
8	01/14/2004	APPLICATION RETURN FROM OIPE			
7	01/14/2004	APPLICATION RETURN TO OIPE			
6	01/14/2004	APPLICATION DISPATCHED FROM OIPE			
5	01/15/2004	APPLICATION IS NOW COMPLETE			
4	01/09/2004	CLEARED BY OIPE CSR			
3	01/09/2004	CASE CLASSIFIED BY L&R			
2	12/13/2003	IFW SCAN & PACR AUTO SECURITY REVIEW			
1	10/14/2003	INITIAL EXAM TEAM NN			

Search Another: Application# [ ] Search

EXPLANATION OF PTA CALCULATION

EXPLANATION OF PTE CALCULATION

To go back use Back button on your browser toolbar.

Back to PALM | ASSIGNMENT | OASIS | Home page

SPE RESPONSE FOR CERTIFICATE OF CORRECTION

DATE : 12/3/08 Paper No.: —

TO SPE OF : ART UNIT 2618

SUBJECT : Request for Certificate of Correction for Appl. No.: 10/683303 Patent No.: 7421258 B2

Please respond to this request for a certificate of correction within 7 days.

FOR IFW FILES:

Please review the requested changes/corrections as shown in the **COCIN** document(s) in the IFW application image. No new matter should be introduced, nor should the scope or meaning of the claims be changed.

Please complete the response (see below) and forward the completed-response to scanning using document code **COCX**.

FOR PAPER FILES:

Please review the requested changes/corrections as shown in the attached certificate of correction. Please complete this form (see below) and forward it with the file to:

Certificates of Correction Branch (CofC)
South Tower - 9A22
Palm Location 7580

Virginia Tolbert
Certificates of Correction Branch
703-308-9390 ext. 113

Thank You For Your Assistance

The request for issuing the above-identified correction(s) is hereby:
Note your decision on the appropriate box.

- ☒ **Approved** — All changes apply.
- ☐ **Approved in Part** — Specify below which changes **do not** apply.
- ☐ **Denied** — State the reasons for denial below.

Comments: Approved. There is new matter.

/DUC NGUYEN/ — **SPE**

2618 — **Art Unit**

UNITED STATES PATENT AND TRADEMARK OFFICE

Commissioner for Patents
United States Patent and Trademark Office
P.O. Box 1450
Alexandria, VA 22313-1450
www.uspto.gov

Kevin R. Imes
2001 So. Mopac # 624
Austin TX 78746

COPY MAILED

JUN 22 2005

OFFICE OF PETITIONS

In re Application of
Travis Baldwin
Application No. 10/683,307
Filed: October 10, 2003
Title of Invention: Golf Training Apparatus and Method of Using the Same

DECISION ON PETITION

This is a decision on the petition under 37 CFR 1.137(b), filed April 21, 2005 to revive the above-identified application.

This petition is hereby **Dismissed**.

Any request for reconsideration must be submitted within TWO (2) MONTHS from the mail date of this decision. Extensions of time under 37 CFR 1.136(a) are permitted. The reconsideration request should include a cover letter entitled "Renewed Petition under 37 CFR 1.137(b)." This is **not** final agency action within the meaning of 5 U.S.C. §704.

This above-identified application became abandoned for failure to timely file a response to a non-final Office Action which was mailed on June 16, 2004. The non-final Office Action set a three (3) month shortened statutory period for reply. No extensions of time were obtained under the provisions of 37 CFR §1.136(a). Accordingly, this application became abandoned on September 17, 2004. A Notice of Abandonment was mailed on February 10, 2005.

A grantable petition under 37 CFR 1.137(b) must be accompanied by: (1) the required reply, unless previously filed; (2) the petition fee as set forth in 37 CFR 1.17(m); (3) a statement that "the entire delay in filing the required reply from the due date for the reply until the filing of a grantable petition pursuant to 37 CFR 1.137(b) was unintentional"; and (4) any terminal disclaimer (and fee as set forth in 37 CFR 1.20(d)) required by 37 CFR 1.137(c). Where there is a question as to whether either the abandonment or the delay in filing a petition under 37 CFR 1.137 was unintentional, the Commissioner may require additional information. See MPEP 711.03 (c)(III)(c) and (D).

The instant petition lacks item (1). Petitioner must submit a reply to the June 16, 2004 Office Action with the renewed petition. The response submitted with the instant petition

is the same reply which the examiner has determined is not a bona fide reply to the Office Action.

As to petitioner's claim that a petition fee is not due, a petition fee is a requirement to treatment under 37 CFR 1.137. Accordingly, the petition to revive fee will not be refunded.

Further Correspondence with respect to this matter should be addressed as follows:

By mail:	Mail Stop Petition Commissioner for Patents P.O. Box 1450 Alexandria, VA 22313-1450
By facsimile:	(703) 872-9306
By delivery service: (FedEx, UPS, DHL, etc.)	U.S. Patent and Trademark Office Customer Service Window, Mail Stop Petition Randolph Building 401 Dulany Street Alexandria, VA 22314

Telephone inquiries concerning this matter should be directed to the undersigned at (571) 272-3215.

Charlema R. Grant
Petitions Attorney
Office of Petitions

UNITED STATES PATENT AND TRADEMARK OFFICE

Commissioner for Patents
United States Patent and Trademark Office
P.O. Box 1450
Alexandria, VA 22313-1450
www.uspto.gov

Kevin R. Imes
2001 So. Mopac # 624
Austin TX 78746

COPY MAILED

AUG 0 3 2005

OFFICE OF PETITIONS

In re Application of :
Travis Baldwin :
Application No. 10/683,307 : ON PETITION
Filed: October 10, 2003 :
Title: Golf Training Apparatus And :
Method of Using The Same

This is a decision on the renewed petition under 37 CFR 1.137(b), filed July 12, 2005, to revive the above-identified application.

This above-identified application became abandoned for failure to timely file a response to a non-final Office Action which was mailed on June 16, 2004. The non-final Office Action set a three (3) month shortened statutory period for reply. No extensions of time were obtained under the provisions of 37 CFR §1.136(a). Accordingly, this application became abandoned on September 17, 2004. A Notice of Abandonment was mailed on February 10, 2005. A petition filed under 37 CFR 1.137(b) was dismissed on June 22, 2005.

This Petition is hereby **Granted**.

The office hereby acknowledges the receipt of the Amendment submitted with the instant petition.

This application is being forwarded to Technology Center 3700 for further processing.

Telephone inquiries concerning this matter should be directed to the undersigned at (571) 272-3215.

Charlema R. Grant
Petitions Attorney
Office of Petitions

UNITED STATES PATENT AND TRADEMARK OFFICE

Commissioner for Patents
United States Patent and Trademark Office
P.O. Box 1450
Alexandria, VA 22313-1450
www.uspto.gov

RICHARD J. MINNICH
FAY SHARPE FAGAN MINNICH & MCKEE, LLP
7TH FLOOR
1100 SUPERIOR AVENUE
CLEVELAND, OH 44114-2518

COPY MAILED

JUN 2 0 2006

OFFICE OF PETITIONS

In re Application of	:	
Miklos Gratzl et al	:	
Application No. 10/683,315	:	DECISION ON PETITION
Filed: October 10, 2003	:	TO WITHDRAW
Attorney Docket No. CWRZ 200349	:	FROM RECORD
	:	

This is a decision on the Request to Withdraw as attorney or agent of record under 37 C.F.R. § 1.36(b), filed November 10, 2005.

The request is **NOT APPROVED**.

A grantable request to withdraw as attorney/agent of record must be signed by every attorney/agent seeking to withdraw or contain a clear indication that one attorney is signing on behalf of another/others. A request to withdraw will not be approved unless at least 30 (thirty) days would remain between the date of approval and the later of the expiration date of a time to file a response or the expiration date of the maximum time period which can be extended under 37 C.F.R. § 1.136(a).

The request cannot be approved because there remains less than 30 (thirty days) between the date of this decision and the maximum extendable time period for filing a response to the Office action mailed on December 23, 2005.

All future communications from the Office will continue to be directed to the above-listed address until otherwise notified by applicant.

Telephone inquiries concerning this decision should be directed to Irvin Dingle at 571-272-3210.

Amelia Au
Petitions Examiner
Office of Petitions

cc: Miklos Gratzl
200 Chatham Way, #164
Mayfield Heights, OH 44124

UNITED STATES PATENT AND TRADEMARK OFFICE

Commissioner for Patents
United States Patent and Trademark Office
P.O. Box 1450
Alexandria, VA 22313-1450
www.uspto.gov

GRAY, CARY, WARE & FREIDENRICH LLP
2000 University Avenue
E. Palo Alto CA 94303-2248

COPY MAILED

AUG 2 0 2004

OFFICE OF PETITIONS

In re Application of
MacKinnon, Looney & White
Application No. 10/683,317
Filed: October 10, 2003
Attorney Docket No. ROCK1100-1
For: SYSTEM AND METHOD FOR PROVIDING ACCESS CONTROL

: DECISION ACCORDING STATUS
: UNDER 37 CFR 1.47(a)

This is in response to the petition under 37 CFR 1.47(a), filed May 17, 2004 (certificate of mailing date May 12, 2004).

The petition is granted.

Petitioners have shown that the non-signing inventor, Richard MacKinnon, has refused to join in the filing of the above-identified application after having been presented with the application papers. Specifically, the declaration of John L. Adair establishes that the inventor received the application papers, including the specification, claims and drawings, but refused to sign the declaration during a telephone conversation with Mr. Adair on May 10, 2004. Petitioners have submitted a declaration in compliance with 37 CFR 1.63 and 1.64.

This application and papers have been reviewed and found in compliance with 37 CFR 1.47(a). This application is hereby accorded Rule 1.47(a) status.

As provided in Rule 1.47(c), this Office will forward notice of this application's filing to the non-signing inventor at the address given in the petition. Notice of the filing of this application will also be published in the Official Gazette.

After this decision is mailed, the above-identified application will be forwarded to Technology Center 2100 for examination in due course.

Telephone inquiries should be directed to the undersigned at (703) 308-6712. After September 28, 2004, please call (571) 272-3230.

E. Shirene Willis

E. Shirene Willis
Senior Petitions Attorney
Office of Petitions

UNITED STATES PATENT AND TRADEMARK OFFICE

Commissioner for Patents
United States Patent and Trademark Office
P.O. Box 1450
Alexandria, VA 22313-1450
www.uspto.gov

RICHARD MACKINNON
4201 SPEEDWAY
AUSTIN, TX 78751

COPY MAILED

AUG 2 0 2004

LETTER OFFICE OF PETITIONS

In re Application of :
MacKinnon, Looney & White :
Application No. 10/683,317 :
Filed: October 10, 2003 :
Attorney Docket No. ROCK1100-1 :
For: SYSTEM AND METHOD FOR PROVIDING :
ACCESS CONTROL

Dear Mr. MacKinnon:

You are named as a joint inventor in the above identified United States patent application, filed under the provisions of 35 U.S.C. 116 (United States Code), and 37 CFR 1.47(a), Rules of Practice in Patent Cases. Should a patent be granted on the application you will be designated therein as a joint inventor.

As a named inventor you are entitled to inspect any paper in the file wrapper of the application, order copies of all or any part thereof (at a prepaid cost per 37 CFR 1.19) or make your position of record in the application. Alternatively, you may arrange to do any of the preceding through a registered patent attorney or agent presenting written authorization from you. If you care to join the application, counsel of record (see below) would presumably assist you. Joining in the application would entail the filing of an appropriate oath or declaration by you pursuant to 37 CFR 1.63.

Requests for information regarding your application should be directed to the File Information Unit at (703)308-2733. Information regarding how to pay for and order a copy of the application, or a specific paper in the application, should be directed to Certification Division at (703)308-9726 or 1(800)972-6382 (outside the Washington D.C. area).

Telephone inquiries regarding this communication should be directed to the undersigned at (703) 308-6712. After September 28, 2004, please call (571) 272-3230.

E. Shirene Willis

E. Shirene Willis
Senior Petitions Attorney
Office of Petitions

ATTORNEY OF RECORD: GRAY, CARY, WARE & FREIDENRICH LLP
2000 University Avenue
E. Palo Alto CA 94303-2248

UNITED STATES PATENT AND TRADEMARK OFFICE

Commissioner for Patents
United States Patent and Trademark Office
P.O. Box 1450
Alexandria, VA 22313-1450
www.uspto.gov

ESCHWEILER & ASSOCIATES, LLC
NATIONAL CITY BANK BUILDING
629 EUCLID AVE., SUITE 1210
CLEVELAND OH 44114

COPY MAILED

SEP 12 2005

OFFICE OF PETITIONS

In re Patent No. 6,888,390	:	
Issued: May 3, 2005	:	
Application No. 10/683,339	:	ON PETITION
Filed: October 10, 2003	:	
Attorney Docket No. RWBP101USA	:	

This is a notice regarding your request for acceptance of a fee deficiency submission under 37 CFR 1.28. On September 1, 1998, the Court of Appeals for the Federal Circuit held that 37 CFR 1.28(c) is the sole provision governing the time for correction of the erroneous payment of the issue fee as a small entity. **See DH Technology v. Synergystex International, Inc. 154 F.3d 1333, 47 USPQ2d 1865 (Fed. Cir. Sept. 1, 1998).**

The Office no longer investigates or rejects original or reissue applications under 37 CFR 1.56. **1098 Off. Gaz. Pat. Office 502 (January 3, 1989)**. Therefore, nothing in this Notice is intended to imply that an investigation was done.

Your fee deficiency submission under 37 CFR 1.28 is hereby **ACCEPTED**.

Inquiries related to this communication should be directed to the undersigned at (571) 272-3282.

Liana Chase
Petitions Examiner
Office of Petitions

UNITED STATES PATENT AND TRADEMARK OFFICE

Commissioner for Patents
United States Patent and Trademark Office
P.O. Box 1450
Alexandria, VA 22313-1450
www.uspto.gov

COPY MAILED

DEC 14 2007

OFFICE OF PETITIONS

BAKER BOTTS, LLP
910 LOUISIANA
HOUSTON TX 77002-4995

In re Application of	:	
Khatri et al	:	
Application No. 10/683,340	:	DECISION GRANTING PETITION
Filed: October 10, 2003	:	UNDER 37 CFR 1.313(c)(2)
Attorney Docket No. 016295.1457	:	

This is a decision on the petition under 37 CFR 1.313(c)(2), filed December 13, 2007, to withdraw the above-identified application from issue after payment of the issue fee.

The petition is **GRANTED**.

The above-identified application is withdrawn from issue for consideration of a submission under 37 CFR 1.114 (request for continued examination). *See* 37 CFR 1.313(c)(2).

Petitioner is advised that the issue fee paid on November 7, 2007 cannot be refunded. If, however, this application is again allowed, petitioner may request that it be applied towards the issue fee required by the new Notice of Allowance.[1]

Telephone inquiries should be directed to the undersigned at (571) 272-3208.

This application is being referred to Technology Center AU 2115 for processing of the request for continued examination under 37 CFR 1.114 and for consideration of the concurrently filed December 13, 2007.

Karen Creasy
Petitions Examiner
Office of Petitions

[1] *The request to apply the issue fee to the new Notice may be satisfied by completing and returning the new Part B – Fee(s) Transmittal Form (along with any balance due at the time of submission). Petitioner is advised that the Issue Fee Transmittal Form must be completed and timely submitted to avoid abandonment of the application.*

UNITED STATES PATENT AND TRADEMARK OFFICE

UNITED STATES DEPARTMENT OF COMMERCE
United States Patent and Trademark Office
Address: COMMISSIONER FOR PATENTS
P.O. Box 1450
Alexandria, Virginia 22313-1450
www.uspto.gov

TAROLLI, SUNDHEIM, COVELL & TUMMINO L.L.P.
1300 EAST NINTH STREET, SUITE 1700
CLEVELAND, OH 44114

Mail Date: 04/26/2010

Applicant	: Jose' Luis Navia	: DECISION ON REQUEST FOR
Patent Number	: 7591847	: RECALCULATION of PATENT
Issue Date	: 09/22/2009	: TERM ADJUSTMENT IN VIEW
Application No	: 10/683,341	: OF WYETH AND NOTICE OF INTENT TO
Filed	: 10/10/2003	: ISSUE CERTIFICATE OF CORRECTION
		:

The Request for Recalculation is **GRANTED** to the extent indicated.

The patent term adjustment has been determined to be **1095** days. The USPTO will *sua sponte* issue a certificate of correction reflecting the amount of PTA days determined by the recalculation.

Prior to the issuance of the certificate of correction, the USPTO will afford patentee an opportunity to be heard and request reconsideration. Accordingly, patentee has **one month or thirty (30) days**, whichever is longer, to file a request for reconsideration of this patent term adjustment calculation. See 35 U.S.C. 154(b)(3)(B)(ii) and 37 CFR 1.322(a)(4). No extensions of time will be granted under 37 CFR 1.136.

Patentee should use document code PET.OP if electronically filing a request for reconsideration of this patent term adjustment calculation. The patentee must also include the information required by 37 CFR 1.705(b)(2) and the fee required by 37 CFR 1.18(e). If patentee does not file a timely request for reconsideration of this patent term adjustment calculation including the information required by 37 CFR 1.705(b)(2) and the fee required by 37 CFR 1.18(e), the USPTO will issue a certificate of correction reflecting the PTA determination noted above.

Patentee should be aware that in order to preserve the right to review in the United States District Court for the District of Columbia of the USPTO patent term adjustment determination, patentee must ensure that he or she also take the steps required under 35 U.S.C. 154(b)(4)(A) in a timely manner. Nothing in the request for recalculation should be construed as providing an alternative time frame for commencing a civil action under 35 U.S.C. 154(b)(4)(A).

Any questions concerning this decision should be directed to the Office of Patent Legal Administration at 571-272-7702.

UNITED STATES PATENT AND TRADEMARK OFFICE

Commissioner for Patents
United States Patent and Trademark Office
P.O. Box 1450
Alexandria, VA 22313-1450
www.uspto.gov

SEYFARTH SHAW
55 EAST MONROE STREET
SUITE 4200
CHICAGO IL 60603-5803

COPY MAILED

NOV 18 2004

OFFICE OF PETITIONS

In re Application of	:	
Thomas Becker	:	
Application No. 10/683,343	:	DECISION GRANTING PETITION
Filed: October 10, 2003	:	
Attorney Docket No.: 457290	:	
Title of Invention: RATCHETING TORQUE-ANGLE WRENCH AND METHOD	:	

This is a decision on the petition filed November 1, 2004, requesting in effect, that a Notice Of Omitted Item(s) in a Nonprovisional Application("Notice") mailed October 12, 2004, be withdrawn.

The application was filed on October 10, 2003. However, on October 12, 2004, the Office of Initial Patent Examination (OIPE) mailed a Notice stating that the application had been accorded a filing date of October 10, 2003 but figures 1 and 2, described in the specification appeared to have been omitted.

In response, the present petition was filed wherein Petitioner contends two sheets of drawings which included figures 1 and 2 as described in the specification were filed on October 10, 2003. In support, the petition is accompanied by a copy of applicant's return postcard which lists " two sheets of informal patent drawings". The petition is further accompanied by a copy of figures 1 and 2.

Applicant's postcard receipt is prima facie evidence that two sheets of drawings, including figures 1 and 2 were received on October 10, 2003, but figures 1 and 2 are not present in the file. Hence, it is clear that the papers for this application were mishandled by the Office. Therefore, it is concluded that figures 1 and 2 as described in the specification were received on October 10, 2003, as shown in counsel's file, and later misplaced in the office.

The petition is **Granted**. Deposit account 19-1351 will be credited with the $130.00 petition fee.

Figures 1-2 supplied on November 1, 2004, will be used for processing and examination purposes.

The application is being returned to the Office of Initial Patent Examination for further processing with a filing date of **October 10, 2003** using the one (1) sheet of drawings containing figures 3 and 4 supplied on October 10, 2003 and the one (1) sheet of drawings containing figures 1 and 2 supplied on November 1, 2004 and for indication in Office records that two (2) sheets of drawings were present on filing.

Telephone inquiries related to this decision may be directed to the undersigned at (571) 272-3215.

Charlema R. Grant
Petitions Attorney
Office of Petitions

UNITED STATES PATENT AND TRADEMARK OFFICE

Commissioner for Patents
United States Patent and Trademark Office
P.O. Box 1450
Alexandria, VA 22313-1450
www.uspto.gov

August 1, 2005

David P. Kelley
3822 Courtyard Drive
Atlanta, GA 30339

Patent No.: **6848356 B1**
Inventor(s): **Peter Michael Mueller**
Issued: February 1, 2005
Title: **BLENDING APPARATUS FOR ICE CREAM**

Re: Request for Certificate of Correction

Consideration has been given your request for the issuance of a certificate of correction for the above-identified patent under the provisions of Rule(s) 1.322 and/or 1.323.

Assignees' names and addresses (assignment data) printed in a patent, are based *solely* on information supplied in the appropriate space for identifying the assignment data, i.e., item 3 of the Issue Fee Transmittal Form PTOL-85B. Granting of a request under 37 CFR 3.81(b) is required to correct applicant's error providing ***incorrect or erroneous*** assignment data, *before* issuance of a Certificate of Correction, under 37 CFR 1.323 *(see Manual of Patent Examining Procedures (M.P.E.P) Chp.1400, sect. 1481).* This procedure is required *at any time after the issue fee is paid*, including after issuance of the patent.

In view of the foregoing, your request, in this mater, is hereby denied.

A request to correct the Assignee under 37 CFR 3.81(b) should include:

A. **the processing fee set forth in 37 CFR 1.117(h) (currently $130);**
B. a statement that the failure to include the correct assignee name on the PTOL-85B was inadvertent; and
C. a copy of the Notice of Recordation of Assignment Document, reflecting the reel and frame number where the assignment(s) is recorded and/or reflecting proof of *the date* the assignment was submitted for recordation.

In the Request, Applicant(s) may request that the file be forwarded to Certificates of Correction Branch, for issuance of a Certificate of Correction, if the Request is granted.

Any request under 37 CFR 3.81(b) should be directed to the following address or facsimile number:

By mail:	Mail Stop PETITIONS Commissioner for Patents Post Office Box 1450 Alexandria, VA 22313-1450
By hand:	Customer Service Window Mail Stop Petitions Randolph Building 401 Dulany Street Alexandria, VA 22314
By fax:	(703) 872-9306 ATTN: Office of Petitions

If a fee (currently $100) was previously submitted for consideration of a Request for Certificate of Correction, under CFR 1.323, to correct assignment data, no additional fee is required.

Virginia Tolbert
For Cecelia Newman
Decisions & Certificates
of Correction Branch
(703) **308-9390 ext 113** or (703) 308-8309

vt

UNITED STATES PATENT AND TRADEMARK OFFICE

Commissioner for Patents
United States Patent and Trademark Office
P.O. Box 1450
Alexandria, VA 22313-1450
www.uspto.gov

OBLON, SPIVAK, MCCLELLAND MAIER
& NEUSTADT, L.L.P.
1940 DUKE STREET
ALEXANDRIA, VA 22314

COPY MAILED

DEC 2 4 2009

OFFICE OF PETITIONS

In re Patent of Kurane et al. :
Patent No. 7,429,655 :
Issue Date: September 30, 2008 :
Application No. 10/683,386 :
Filing Date: October 14, 2003 :
Attorney Docket No. 243776US0X CONT :

DECISION ON APPLICATION FOR RECONSIDERATION OF PATENT TERM ADJUSTMENT

This is in response to the "Petition Under 37 CFR §1.705(d) and Request for Reconsideration of Patent Term Adjustment" filed December 1, 2008. Patentees request the determination of patent term adjustment indicated on the issue notification (and on the patent) be corrected from two hundred thirty-eight (238) days to four hundred fifty-seven (457) days.

The request for reconsideration of the patent term adjustment indicated on the patent is **dismissed**.

The application matured into United States Patent No. 7,429,655 with a patent term adjustment of 238 days on September 30, 2008. This request for reconsideration was timely filed within two months of the issue date of the patent.[1] The record indicates a terminal disclaimer was filed during prosecution of the application.

Patentees assert the patent term adjustment should have been increased by 219 days (from 238 days to 457 days) for Office delay under 35 U.S.C. § 154(b)(1)(B) ("B Delay").

The first issue to be addressed is the number of days of B Delay.

Per 35 U.S.C. § 154(b)(1)(B)(i), B Delay does not include "any time consumed by continued examination of the application requested by the applicant under section 132(b)."[2] In other

[1] Although the request was filed on December 1, 2008, the request is timely because November 30, 2008, fell on a Sunday.

[2] *See also Changes to Implement Patent Term Adjustment Under Twenty-Year Patent Term; Final Rule*, 65 Fed. Reg. 56,366, 53,370-53,371 (September 18, 2000):

> 35 U.S.C. 154(b)(1)(B) provides that an applicant may receive a term adjustment if the application is not issued within three years of the filing date of the application, excluding (among other things) any time consumed by continued examination requested under 35 U.S.C. 132(b). Once a request for continued

words, B Delay in this case is the number of days from the date the application was filed until a Request for Continued Examination ("RCE") was filed.

The application was filed October 14, 2003. A Request for Continued Examination ("RCE") was filed May 21, 2007. B Delay in this case is the number of days beginning on the day after the date three years after the application was filed until the day *before* the date a RCE was filed.[3] In other words, B Delay in this case is 218 days which is the number of days from October 14, 2006, to May 20, 2007.

The second issue to be addressed is the extent to which the patent term adjustment should have been increased as a result of B Delay. 35 U.S.C. § 154(b)(2)(A) limits Office delay to the sum of delay under 35 U.S.C. § 154(b)(1)(A) ("A Delay") and B Delay to the extent such periods of delay are not overlapping. Specifically, 35 U.S.C. § 154(b)(2)(A) states,

> To the extent that time periods of delay attributable to grounds specified in paragraph (1) overlap, the period of any adjustment granted under this section shall not exceed the actual number of days the issuance of the patent was delayed.

Patentees do not dispute that the total period of Office delay is the sum of the period of A Delay and the period of B Delay to the extent the periods of delay do not overlap. However, patentees assert the period of overlap is 0 days. The Office does not agree with patentees' assertion. The Office contends the period of overlap is 218 days.

The Office has described its position regarding the proper interpretation of 35 U.S.C. § 154(b)(2)(A) as follows:

> If an application is entitled to an adjustment under 35 U.S.C. 154(b)(1)(B), the entire period which the application was pending before the Office (except for periods excluded under 35 U.S.C. 154(b)(1)(B)(i)-(iii)), and not just the period beginning three years after the actual filing date of the application, is the period of delay under 35 U.S.C. 154(b)(1)(B) in determining whether periods of delay overlap under 35 U.S.C. 154(b)(2)(A). Thus, any days of delay for Office issuance of the patent more than 3 years after the filing date of the application, which overlap with the days of patent term adjustment accorded prior to the issuance of the patent will not result in any additional patent term adjustment.[4]

---

examination under 35 U.S.C. 132(b) and § 1.114 is filed in an application, any further processing or examination of the application, including granting of a patent, is by virtue of the continued examination given to the application under 35 U.S.C. 132(b) and § 1.114.

[3] The instant case does not contain any time periods falling under 35 U.S.C. §§ 154(b)(1)(B)(ii)-(iii). Therefore, per 37 CFR 1.703(b)(1), B Delay is the number of days beginning on the day after the date three years after application was filed until the date of issuance reduced by "[t]he number of days, if any, in the period beginning on the date on which a request for continued examination of the application under 35 U.S.C. 132(b) was filed and ending on the date the patent was issued."

[4] *Explanation of 37 CFR 1.703(f) and of the United States Patent and Trademark Office Interpretation of 35 U.S.C. 154(b)(2)(A)*, 69 Fed. Reg. 34283 (June 21, 2004) (*quoting Revision of Patent Term Extension and Patent Term*

In this case, the relevant time period when determining if periods of delay "overlap" is the time period from the filing date of the application, October 14, 2003, to the date of issuance of the patent, September 30, 2008, excluding the time period consumed by continued examination of the application under 35 U.S.C. § 132(b). In other words, the relevant time period for determining if periods of delay "overlap" is October 14, 2003, to May 20, 2007.

All of the 454 days of A Delay were accrued under 37 C.F.R. § 1.702(a)(1) prior to the filing of the RCE. As a result, all of the 218 days of B Delay overlap with days of A Delay.

Since the 218 days of B delay overlap with 218 of the 454 days of A Delay, the Office acted properly when the Office did not enter any additional days to the patent term adjustment for B Delay when issuing the patent.

The Office recognizes patentees' arguments involving the Memorandum and Order entered in *Wyeth v. Dudas*, 580 F. Supp. 2d 138, 88 U.S.P.Q. 2d 1538 (D.D.C. 2008). However, the Office is not persuaded that the Office's current and long standing interpretation of the statute is incorrect.

The Office's interpretation of 35 U.S.C. § 154(b)(2)(A) is consistent with the purpose of the statute. The language in 35 U.S.C. § 154(b)(2)(A) is the result of the passage of the American Inventors Protection Act, Pub. L. No. 106-113, §§ 4401, 113 Stat. 1501, 1501A-552 (1999).

A section-by-section analysis of the American Inventors Protection Act, published in the Congressional Record at the request of Senator Lott, elaborated this limitation:

> [T]otal adjustments granted for restorations under (b)(1) are reduced as follows: (1) To the extent that there are multiple grounds for extending the term of a patent that may exist simultaneously (e.g., delay due to a secrecy order * * * and administrative delay under section 154(b)(1)(A)), the term should not be extended for each ground of delay but only for the actual number of days that the issuance of a patent was delayed.[5]

In view of the previous discussion, the patent term adjustment set forth on the patent remains 238 days. Therefore, the patent term adjustment on the patent will not be changed.

Adjustment Provisions; Final Rule, 69 Fed. Reg. 21704, 21706 (April 22, 2004)). The Notice also provided a discussion of an example of the application of the overlap provision:

> A two month delay in issuing a first Office action (35 U.S.C. 154(b)(1)(A)(i)) and a two-month delay in issuing the patent (35 U.S.C. 154(b)(1)(B)) [are] considered overlapping delays, even though the two-month delay in issuing the first Office action occurred prior to three years (thirty-six months) after the application's filing date. This is because if the Office does not issue the patent until three years and two months (thirty-eight months) after its filing date, the relevant period in determining the Office delay in issuing the patent is not just the period between three years (thirty-six months) after the application's filing date and the date the patent issues (thirty-eight months after the application's filing date), but is the entire period between the application's filing date and the date the application issues.

[5] 145 Cong. Rec. S14,708, S14,718 (Nov. 17, 1999).

The $200.00 fee set forth in 37 CFR 1.18(e) has been charged to Deposit Account No. 15-0030, as authorized in the request.

Telephone inquiries specific to this decision should be directed to Senior Petitions Attorney Steven Brantley at (571) 272-3203.

Nancy Johnson
Senior Petitions Attorney
Office of Petitions

UNITED STATES PATENT AND TRADEMARK OFFICE

Commissioner for Patents
United States Patent and Trademark Office
P.O. Box 1450
Alexandria, VA 22313-1450
www.uspto.gov

ABELMAN, FRAYNE & SCHWAB
666 THIRD AVENUE, 10TH FLOOR
NEW YORK, NY 10017

COPY MAILED

DEC 0 4 2006

OFFICE OF PETITIONS

In re Application of :
Paul Anthony Camilleri :
Application No. 10/683,409 : DECISION GRANTING PETITION
Filed: October 9, 2003 :
Attorney Docket No. 206,216 :

This is a decision on the petition filed November 22, 2006, under 37 CFR 1.10 requesting that the "Second Supplemental Amendment and Election" be accorded a filing date of August 23 2006, rather than the presently accorded filing date of August 24, 2006.

Petitioner alleges that the "Second Supplemental Amendment and Election" was deposited with the Express Mail Service on August 23, 2006. In support of the allegation, the petition is accompanied by a copy of the Express Mail label with a tracking number ER059676122US showing a "date-in" of August 23, 2006. The tracking number cited is the same number found on the "Statement of Filing by Express Mail 37 CFR 1.10" that accompanied the "Second Supplemental Amendment and Election." The evidence is convincing that the "Second Supplemental Amendment and Election" was deposited on August 23, 2006.

In view of the above, the petition is granted. The new filing date for the "Second Supplemental Amendment and Election" is August 23, 2006.

The application is being directed to Technology Center 3600, GAU 3635 for further processing.

Any inquiries related to this decision should be directed to the undersigned at (571)272-3222.

Kenya A. McLaughlin
Petitions Attorney
Office of Petitions

UNITED STATES PATENT AND TRADEMARK OFFICE

Commissioner for Patents
United States Patent and Trademark Office
P.O. Box 1450
Alexandria, VA 22313-1450
www.uspto.gov

ABELMAN, FRAYNE & SCHWAB
666 THIRD AVENUE, 10TH FLOOR
NEW YORK, NY 10017

COPY MAILED

AUG 17 2009

OFFICE OF PETITIONS

In re Application of :
Paul Anthony CAMILLERI :
Application No. 10/683,409 : DECISION ON PETITION
Filed: October 9, 2003 :
Attorney Docket No. 206.216 :

This is a decision on the petition under the unintentional provisions of 37 CFR 1.137(b), filed May 21, 2009, to revive the above-identified application.

The petition is **GRANTED**.

This application became abandoned as a result of petitioner's failure to file a proper reply to the Notice of Non-Compliant Amendment mailed, July 14, 2008, which set a period for reply of one (1) month. A one (1) month extension of time under the provisions of 37 CFR 1.136(a) was obtained. Accordingly, the application became abandoned on September 15, 2008.

The petition satisfies the requirements of 37 CFR 1.137(b) in that petitioner has supplied (1) a reply in the form of an amendment, (2) the petition fee of $810; and (3) the required statement of unintentional delay.

There is no indication that the person signing the petition was ever given a power of attorney to prosecute the application. If the person signing the petition desires to receive future correspondence regarding this application, the appropriate power of attorney document must be submitted.

Telephone inquiries concerning this decision should be directed to Diane Goodwyn at (571) 272-6735.

This application is being referred to Technology Center 3635 for appropriate action by the Examiner in the normal course of business on the reply received May 21, 2009.

Thurman K. Page
Petitions Examiner
Office of Petitions

UNITED STATES PATENT AND TRADEMARK OFFICE

UNITED STATES DEPARTMENT OF COMMERCE
United States Patent and Trademark Office
Address: COMMISSIONER FOR PATENTS
P.O. Box 1450
Alexandria, Virginia 22313-1450
www.uspto.gov

PERKINS COIE LLP
PATENT-SEA
P.O. BOX 1247
SEATTLE, WA 98111-1247

Mail Date: 04/20/2010

Applicant	: Allen P. Mardian	: DECISION ON REQUEST FOR
Patent Number	: 7581511	: RECALCULATION of PATENT
Issue Date	: 09/01/2009	: TERM ADJUSTMENT IN VIEW
Appliction No	: 10/683,424	: OF WYETH AND NOTICE OF INTENT TO
Filed	: 10/10/2003	: ISSUE CERTIFICATE OF CORRECTION
		:

The Request for Recalculation is **GRANTED** to the extent indicated.

The patent term adjustment has been determined to be **734** days. The USPTO will *sua sponte* issue a certificate of correction reflecting the amount of PTA days determined by the recalculation.

Prior to the issuance of the certificate of correction, the USPTO will afford patentee an opportunity to be heard and request reconsideration. Accordingly, patentee has **one month or thirty (30) days**, whichever is longer, to file a request for reconsideration of this patent term adjustment calculation. See 35 U.S.C. 154(b)(3)(B)(ii) and 37 CFR 1.322(a)(4). No extensions of time will be granted under 37 CFR 1.136.

Patentee should use document code PET.OP if electronically filing a request for reconsideration of this patent term adjustment calculation. The patentee must also include the information required by 37 CFR 1.705(b)(2) and the fee required by 37 CFR 1.18(e). If patentee does not file a timely request for reconsideration of this patent term adjustment calculation including the information required by 37 CFR 1.705(b)(2) and the fee required by 37 CFR 1.18(e), the USPTO will issue a certificate of correction reflecting the PTA determination noted above.

Patentee should be aware that in order to preserve the right to review in the United States District Court for the District of Columbia of the USPTO patent term adjustment determination, patentee must ensure that he or she also take the steps required under 35 U.S.C. 154(b)(4)(A) in a timely manner. Nothing in the request for recalculation should be construed as providing an alternative time frame for commencing a civil action under 35 U.S.C. 154(b)(4)(A).

Any questions concerning this decision should be directed to the Office of Patent Legal Administration at 571-272-7702.

SPE RESPONSE FOR CERTIFICATE OF CORRECTION

Paper No.: _____

DATE : 3/26/09

TO SPE OF : ART UNIT 1643

SUBJECT : Request for Certificate of Correction for Appl. No.: 10683480 Patent No.: 7357928 B2

Please respond to this request for a certificate of correction within 7 days.

FOR IFW FILES:

Please review the requested changes/corrections as shown in the **COCIN** document(s) in the IFW application image. No new matter should be introduced, nor should the scope or meaning of the claims be changed.

Please complete the response (see below) and forward the completed response to scanning using document code **COCX**.

FOR PAPER FILES:

Please review the requested changes/corrections as shown in the attached certificate of correction. Please complete this form (see below) and forward it with the file to:

Certificates of Correction Branch (CofC)
South Tower - 9A22
Palm Location 7580
You can fax the Directors/SPE response to 571-270-9990

LAMONTE NEWSOME
Certificates of Correction Branch
703-308-9390 ext. 112

Thank You For Your Assistance

The request for issuing the above-identified correction(s) is hereby:
Note your decision on the appropriate box.

XApproved	**All** changes apply.
❑ **Approved in Part**	Specify below which changes **do not** apply.
❑ **Denied**	State the reasons for denial below.

Comments: _____

SPE RESPONSE FOR CERTIFICATE OF CORRECTION

/Larry R. Helms/ AU 1643

SPE Art Unit

UNITED STATES PATENT AND TRADEMARK OFFICE

Commissioner for Patents
United States Patent and Trademark Office
P.O. Box 1450
Alexandria, VA 22313-1450
www.uspto.gov

LAWRENCE BERKELEY NATIONAL LABORATORY
ONE CYCLOTRON ROAD MAIL STOP 90B
UNIVERSITY OF CALIFORNIA
BERKELEY CA 94720

COPY MAILED

SEP 0 1 2006

OFFICE OF PETITIONS

In re Application of		
Schenkel, et al.	:	
Application No. 10/683,488	:	DECISION ON
Filed: October 9, 2003	:	PETITION
Attorney Docket No. IB-1886	:	

This is in response to the petition to revive under 37 CFR 1.137(b), filed April 27, 2006.

The petition under 37 CFR 1.137(b) is **GRANTED**.

The above-identified application became abandoned for failure to pay the issue fee in response to the Notice of Allowance mailed November 14, 2005. No issue fee having been received, the application became abandoned on February 15, 2006. A Notice of Abandonment was mailed on March 28, 2006.

With the instant petition, petitioner paid the petition and issue fees, and made the proper statement of unintentional delay.

The application is being forwarded to the Office of Patent Publication for processing into a patent.

Telephone inquiries related to this decision should be directed to the undersigned at (571)272-3207.

Cliff Congo
Petitions Attorney
Office of Petitions

SPE RESPONSE FOR CERTIFICATE OF CORRECTION

Paper No.:20100314

DATE : March 13, 2010

TO SPE OF : ART UNIT 1621

SUBJECT : Request for Certificate of Correction on Patent No.: 7579496

A response is requested with respect to the accompanying request for a certificate of correction.

Please complete this form and return with file, within **7** days to:
Certificates of Correction Branch - ST (South Tower) 9A22
Palm location **7590** - Tel. No. (703) 305-8309

With respect to the change(s) requested, correcting Office and/or Applicant's errors, should the patent read as shown in the certificate of correction? No new matter should be introduced, nor should the scope or meaning of the claims be changed.

Thank You For Your Assistance **Certificates of Correction Branch**

The request for issuing the above-identified correction(s) is hereby:

Note your decision on the appropriated box.

☒ **Approved** All changes apply.

☐ **Approved in Part** Specify below which changes **do not** apply.

☐ **Denied** State the reasons for denial below.

Comments:

/DANIEL M SULLIVAN/
Supervisory Patent Examiner.Art Unit 1621

SPE RESPONSE FOR CERTIFICATE OF CORRECTION

Paper No.: —

DATE : 3/17/08

TO SPE OF : ART UNIT 3662

SUBJECT : Request for Certificate of Correction for Appl. No.: 10/683507 Patent No: 7038615 B2

A response is requested with respect to a request for a certificate of correction.

With respect to the change(s) requested to correct Office and/or Applicant's errors, should the patent read as shown in the certificate of correction attached herewith or the COCIN document(s), in IFW images for the above-identified patented application? No new matter should be introduced, nor should the scope or meaning of the claims be changed.

If the response is for an IFW, within 7 days, please complete and forward the response, to the employee (named below) via scanning into application images, using document code **COCX**.

If the response is for a paper file wrapper, please complete the response and forward the response with the paper file wrapper, to the employee (named below), within 7 days, to:

Certificates of Correction Branch (CofC)
South Tower - 9A22
Palm Location 7580

VIRGINIA TOLBERT
Certificates of Correction Branch
703-308-9390 ext. 113

Thank You For Your Assistance

The request for issuing the above-identified correction(s) is hereby:
Note your decision on the appropriate box.

- ☒ **Approved** — All changes apply.
- ☐ **Approved in Part** — Specify below which changes **do not** apply.
- ☐ **Denied** — State the reasons for denial below.

Comments: _____

Thomas D Tarrage
SPE

3662
Art Unit

UNITED STATES PATENT AND TRADEMARK OFFICE

COMMISSIONER FOR PATENTS
UNITED STATES PATENT AND TRADEMARK OFFICE
P.O. BOX 1450
ALEXANDRIA, VA 22313-1450
www.uspto.gov

ROPES & GRAY LLP
ONE INTERNATIONAL PLACE
BOSTON MA 02110-2624

COPY MAILED

APR 21 2004

OFFICE OF PETITIONS

ON PETITION

In re Application of
Schultes, et al.
Application No. 10/683,510
Filed: October 10, 2003
Attorney Docket No. AREX-P03-009
For: THERAPEUTIC METHOD AND COMPOSITION UTILIZING ANTIGEN-ANTIBODY COMPLEXATION AND PRESENTATION BY DENDRITIC CELLS

This is a decision on the petition filed February 9, 2004, requesting, in effect, withdrawal of a Notice mailed February 2, 2004.

The application was filed on October 10, 2003. However, on February 2, 2004, The Office of Initial Patent Examination mailed a "Notice of Omitted Items in a Nonprovisional Application" (Notice) stating that the application had been accorded a filing date of October 10, 2003, and advising applicant that figures 2, 3A and 3B, as described in the specification, appeared to have been omitted.

In response, the present petition was filed. Petitioners argue that figures 2, 3A and 3B should be included with the papers filed on October 10, 2003, because they were originally filed in prior application No. 09/853,268, the entire disclosure of which was incorporated by reference at the time of filing.

The petition is dismissed.

The mailing of a "Notice of Omitted Items" permits the applicant to either: (1) promptly establish prior receipt in the PTO of the items at issue (generally by way of a date-stamped postcard receipt (MPEP 503)), or (2) promptly submit the omitted items in a nonprovisional application and accept the date of such submission as the application filing date. An applicant asserting that the missing items were in fact deposited in the PTO with the application papers must file a petition (and the appropriate petition fee) with evidence of such deposit. An applicant desiring to submit the omitted items in a nonprovisional application and accept the date of such submission as the application filing date must file any omitted items with an oath or declaration in compliance with 37 CFR 1.63 and 1.64 referring to such items and a petition under 37 CFR 1.182 (with the petition fee under 37 CFR 1.17(h)) requesting the later filing date within two months of the date of the "Notice of Omitted Items" (37 CFR 1.181(f)).

In this case, petitioners neither assert that the missing figures were actually deposited in the PTO on October 10, 2003, with the other application papers nor request a later filing date.

Instead, applicants seek to add the figures to the present application on the basis that the figures are not new matter. However, no petition is necessary for that purpose. Additional figures may be entered by the primary examiner without a petition so long as the figures contain no new matter. See MPEP § 608.02(a).

MPEP 201.06(c) states that:

> . . . an applicant may incorporate by reference the prior application by including, in the application-as-filed, a statement that such specifically enumerated prior application or applications are "hereby incorporated herein by reference." The statement may appear in the specification or in the application transmittal letter. The inclusion of this incorporation by reference of the prior application(s) will permit an applicant to amend the continuing application to include any subject matter in such prior application(s), without the need for a petition. (emphasis supplied)

If applicants desire that figures 2, 3A and 3B be added to the application, the appropriate procedure is by way of amendment requesting the entry of the figures. Any such amendment should be filed prior to the first action on the merits and will be considered by the primary examiner.

Accordingly, the petition is inappropriate and is subject to dismissal.

The application is being returned to the Office of Initial Patent Examination for further processing with a filing date of October 10, 2003. Figures 2, 3A and 3B, submitted with the instant petition, will **not** be processed at this time.

Telephone inquiries specific to this matter should be directed to the undersigned at (703) 308-6712.

E. Shirene Willis
Senior Petitions Attorney
Office of Petitions
Office of the Deputy Commissioner
for Patent Examination Policy

UNITED STATES PATENT AND TRADEMARK OFFICE

3-12-09

Commissioner for Patents
United States Patent and Trademark Office
P.O. Box 1450
Alexandria, VA 22313-1450
www.uspto.gov

Patent No. : 7,340,260 B2
Ser. No. : 10/683,571
Inventor(s) : Joseph C. McAlexander
Issued : March 4, 2008
Title : SYSTEM AND METHOD FOR TRACKING THE LOCATION OF MULTIPLE MOBILE RADIO TRANSCEIVER UNITS
Docket No. mdfhh01-00004

Re: Request for Certificate of Correction

Consideration has been given your request for the issuance of a certificate of correction for the above-identified patent under the provisions of Rule(s) 1.322.

Assignees' names and addresses (assignment data) printed in a patent, are based *solely* on information supplied in the appropriate space for identifying the assignment data, i.e., item 3 of the Issue Fee Transmittal Form PTOL-85B. Granting of a request under 37 CFR 3.81(b) is required to correct applicant's error providing ***incorrect or erroneous*** assignment data, *before* issuance of a Certificate of Correction, under 37 CFR 1.323 *(see Manual of Patent Examining Procedures (M.P.E.P) Chp.1400, sect. 1481).* This procedure is required *at any time after the issue fee is paid*, including after issuance of the patent.

In view of the foregoing, your request is hereby denied.

A request to correct the Assignee under 37 CFR 3.81(b) should include:

A. **the processing fee set forth in 37 CFR 1.117(h) (currently $130);**
B. a statement that the failure to include the correct assignee name on the PTOL-85B was inadvertent; and
C. a copy of the Notice of Recordation of Assignment Document, reflecting the reel and frame number where the assignment(s) is recorded and/or reflecting proof of *the date* the assignment was submitted for recordation.

In the Request, Applicant(s) may request that the file be forwarded to Certificates of Correction Branch, for issuance of a Certificate of Correction, if the Request is granted.

Any request under 37 CFR 3.81(b) should be directed to the following address or facsimile number:

By mail: Mail Stop PETITIONS
Commissioner for Patents
Post Office Box 1450
Alexandria, VA 22313-1450

By hand: Customer Service Window
Mail Stop Petitions
Randolph Building
401 Dulany Street
Alexandria, VA 22314

By fax: (703) 872-9306
ATTN: Office of Petitions

If a fee (currently $100) was previously submitted for consideration of a Request for Certificate of Correction, under CFR 1.323, to correct assignment data, , no additional fee is required.

Eva James
For Mary Diggs
Decisions & Certificates
of Correction Branch
(703) **308-9390 ext. 124** or 125

Docket Clerk
P.O. Drawer 800889
Dallas, Texas 75380

ej

UNITED STATES PATENT AND TRADEMARK OFFICE

Commissioner for Patents
United States Patent and Trademark Office
P.O. Box 1450
Alexandria, VA 22313-1450
www.uspto.gov

WK

Mailed: 1-16-07

In re application of
Mather et al.
Serial No. 10/683,558
Filed: October 10, 2003
For: Blends of Amorphous and Semicrystalline Polymers Having Shape Memory Properties

DECISION ON PETITION

This is a decision on PETITION TO EXPUNGE UNDER 37 C.F.R. 1.59(b), filed December 26, 2006, which has been accepted as a timely petition under 1.59(b) and MPEP 724.02 and is before the Group Director of Technology Center for consideration.

DECISION

Petitioner requests that the "Form 1449" matched with the application on December 11, 2006 be expunged. Each of the criteria for granting the request has been satisfied, see the MPEP 724.05.

The petition is **GRANTED.**

Section 1.59 has been amended to eliminate references to returning documents that have been expunged to recognize that, with electronic Official files, there will be nothing to return when a paper is expunged.

The Office is capturing electronic images of all documents that form the Official file. Where the image is generated from a physical source document, the originating document may be disposed of once the electronic image accuracy is verified. The paper source document will eventually be destroyed under a United States National Archives and Records Administration (NARA) approved schedule. Therefore, if a document is to be expunged from the record, the only operation that will be required will be removal of the image from the Official file.

Paragraph (a)(1) of §1.59 has been amended by deleting the phrase "and returned " from the first sentence, and deleting the second sentence. Paragraph (b) of §1.59 has been amended by deleting the phrase "and return " from each of the first and second sentences. The Office will continue to provide notice in the Official file that a paper has been expunged and the Office will send a decision to the applicant notifying the applicant that the paper has been expunged.

10/683,558

The image of the document will be removed from the Official file.

Jacqueline M. Stone

Jacqueline M. Stone, Director
Technology Center 1700
Chemical and Materials Engineering

J. Michael Buchanan
55 Griffin Road South
Bloomfield, CT 06002

UNITED STATES PATENT AND TRADEMARK OFFICE

Commissioner for Patents
United States Patent and Trademark Office
P.O. Box 1450
Alexandria, VA 22313-1450
www.uspto.gov

SALUBRIS, INC.
12 ALFRED STREET, BALDWIN PARK 1
SUITE 300
WOBURN MA 01801

COPY MAILED

MAR 0 5 2008

OFFICE OF PETITIONS

In re Application of :
Tanil Zuhtu KOCAGOZ :
Application No. 10/683,565 : ON PETITION
Filed: October 10, 2003 :
Attorney Docket No. 5873-00100 :

This is a decision on the petition under 37 CFR 1.137(b), filed December 26, 2007, to revive the above-identified application.

The petition is **DISMISSED**.

Any request for reconsideration of this decision must be submitted within TWO (2) MONTHS from the mail date of this decision. Extensions of time under 37 CFR 1.136(a) are permitted. The reconsideration request should include a cover letter entitled "Renewed Petition under 37 CFR 1.137(b)." This is not a final agency action within the meaning of 5 U.S.C. § 704.

The application became abandoned for failure to timely reply within the meaning of 37 CFR 1.113 to the final Office action, mailed November 30, 2006, which set a shortened statutory period for reply of three (3) months. No extension of time under the provisions of 37 CFR 1.136(a) was obtained. Accordingly, the application became abandoned on March 1, 2007.

A grantable petition under 37 CFR 1.137(b) must be accompanied by: (1) the required reply, unless previously filed; (2) the petition fee as set forth in 37 CFR 1.17(m); (3) a statement that the entire delay in filing the required reply from the due date for the reply until the filing of a grantable petition pursuant to 37 CFR 1.137(b) was unintentional; and (4) any terminal disclaimer (and fee as set forth in 37 CFR 1.20(d)) required by 37 CFR 1.137(d). Where there is a question as to whether either the abandonment or the delay in filing a petition under 37 CFR 1.137 was unintentional, the Commissioner may require additional information. See MPEP 711.03(c)(III)(C) and (D).

The instant petition does not satisfy requirement (2).

The rules and statutory provisions governing the operations of the U.S. Patent and Trademark Office require payment of a fee on filing each petition to revive an abandoned application for patent based on unintentional delay or to accept an unintentionally delayed payment of a fee for issuing a patent. In this instance, the fee required by law is $1,540. If applicant can qualify as a

"small entity" and does so prior to or together with the payment of the fee, the fee will be one-half of the amount indicated. See 37 CFR 1.27.

The petition in the above-identified application was not accompanied by payment of the required fee. No consideration on the merits can be given to the petition until the required fee is received.

An insufficient payment by check has been made. As of September 30, 2007, the small inventive entity fee for the Request for Continued Examination (RCE) filing was $405 and for the petition under 37 CFR 1.137(b) $770. On December 26, 2007, Petitioner submitted two checks, one in the amount of $395 for filing an RCE and the other of $250 for the petition under 37 CFR 1.137(b). Further, no authorization to charge a deposit account was given. While both submissions are short, it is noted however that the Office has processed the filing of the RCE as though it has been paid in the full amount of $405 and the petition under 37 CFR 1.137(b) in partial amount of $240. Hence, a difference of $530 for the petition fee should be paid.

Further correspondence with respect to this matter should be addressed as follows:

By mail:	Mail Stop PETITIONS Commissioner for Patents Post Office Box 1450 Alexandria, VA 22313-1450
By hand:	Customer Service Window Mail Stop Petitions Randolph Building 401 Dulany Street Alexandria, VA 22314
By fax:	(571) 273-8300 ATTN: Office of Petitions

Any questions concerning this matter may be directed to Quyen Leung at (571) 272-6051 or in her absence, the undersigned at (571) 272-7099.

David A. Bucci
Petitions Examiner
Office of Petitions

UNITED STATES PATENT AND TRADEMARK OFFICE

Commissioner for Patents
United States Patent and Trademark Office
P.O. Box 1450
Alexandria, VA 22313-1450
www.uspto.gov

SALUBRIS, INC.
12 ALFRED STREET, BALDWIN PARK 1
SUITE 300
WOBURN MA 01801

COPY MAILED

AUG 0 1 2008

In re Application of :
Tanil Zuhtu KOCAGOZ :
Application No. 10/683,565 : ON PETITION
Filed: December 10, 2003 :
Attorney Docket No. 5873-00100 :

This is a decision on the renewed petition under 37 CFR 1.137(b), filed May 5, 2008, to revive the above-identified application.

The petition is **GRANTED**.

The application became abandoned for failure to timely reply within the meaning of 37 CFR 1.113 to the final Office action mailed November 30, 2006, which set a shortened statutory period for reply of three (3) months. No extensions of time under the provisions of 37 CFR 1.136(a) was obtained. Accordingly, the application became abandoned on March 1, 2007.

The petition satisfies the requirements of 37 CFR 1.137(b) in that the petitioner has supplied (1) the reply in the form of an amendment, a Request for Continued Examination and $ 405 fee, (2) the petition fee of $ 770, and (3) a proper statement of unintentional delay.

Telephone inquiries concerning this decision should be directed to Lori Baker Amerson at (571) 272-6052 or in her absence the undersigned at (571) 272-7099.

The application file is being referred to Technology Center AU 1651 for appropriate action by the Examiner.

Christie Bottoff

for David Bucci
Petitions Examiner
Office of Petitions

SPE RESPONSE FOR CERTIFICATE OF CORRECTION

Paper No.:20080514-1

DATE : May 14, 2008

TO SPE OF : ART UNIT 2624

SUBJECT : Request for Certificate of Correction on Patent No.: 7,280,677

A response is requested with respect to the accompanying request for a certificate of correction.

Please complete this form and return with file, within **7** days to:
Certificates of Correction Branch - ST (South Tower) 9A22
Palm location **7590** - Tel. No. (703) 305-8309

With respect to the change(s) requested, correcting Office and/or Applicant's errors, should the patent read as shown in the certificate of correction? No new matter should be introduced, nor should the scope or meaning of the claims be changed.

Thank You For Your Assistance **Certificates of Correction Branch**

The request for issuing the above-identified correction(s) is hereby:

Note your decision on the appropriated box.

☒ **Approved** All changes apply.

☐ **Approved in Part** Specify below which changes **do not** apply.

☐ **Denied** State the reasons for denial below.

Comments:

It is OK to enter corrections identified in the request for Certificate of Correction filed March 10, 2008.

SPE: /Eileen Lillis/ SPE 2624 Art Unit 2624

UNITED STATES PATENT AND TRADEMARK OFFICE

Commissioner for Patents
United States Patent and Trademark Office
P.O. Box 1450
Alexandria, VA 22313-1450
www.uspto.gov

MAILED

AUG 23 2006

Director's Office
Group 3700

Joseph B. Taphorn
8 Scenic Drive
Hagan Farms
Poughkeepsie, NY 12603

In re Application of
FERNANDEZ, JOYCE
Application No.: 10/683,616
Filed: October 14, 2003

: **DECISION ON**
: **PETITION**
: **UNDER**
: **37 CFR 1.181**

This is a decision on the petition filed May 30, 2006 under 37 CFR 1.181 requesting supervisory review of the final office action mailed February 24, 2006 and the advisory actions mailed March 31, 2006 and April 26, 2006. Petitioner requested reconsideration of the finality of the February 24, 2006 office action in the amendments after final received on March 31, 2006 and April 7, 2006.

The petition is granted.

Petitioner requests that 1) the finality of the office action mailed February 24, 2006 be set aside; 2) the Examiner's refusal to enter, per the Advisory action mailed March 31, 2006, the amendments proposed in the Amendment After Final received on March 21, 2006 be overruled; and 3) the Examiner's refusal to enter, per the Advisory Action mailed April 26, 2006, the amendments proposed in the Second Amendment After Final received on April 7, 2006 be overruled.

In regard to the finality of the office action, the rejection of at least claim 7, Hathaway in view of Cordisco was not necessitated by amendment. It is noted that claim 7 was amended only in the preamble and the treatment of the claim with regard to the structure of the device did not change. As such, the February 24, 2006 final office action is premature and thus the finality of the action is hereby withdrawn. Since the finality is being withdrawn, the amendments after final received on March 21, 2006 and April 7, 2006 are entered as a matter of right. The examiner will act on the claims of the last submitted amendment of April 7, 2006.

In regard to the refusal to enter the amendments after final, since the February 24, 2006 final office action was found to be premature and the amendments are being entered as a matter

of right, petitioner's arguments to the refusal of entry of the amendments in the Advisory actions are dismissed as moot.

The application is being forwarded to the technical support staff to withdraw the finality of the office action dated February 24, 2006 and to enter the amendments after final dated March 21, 2006 and April 7, 2006. The application will then be forwarded to the examiner for an action not inconsistent with this decision.

Any questions regarding this decision should be directed to Special Program Examiner, Linda Sholl, at 571-272-4391.

Karen M. Young, Director
Technology Center 3700

SPE RESPONSE FOR CERTIFICATE OF CORRECTION

Paper No.: _____

DATE : February 09, 2007

TO SPE OF : ART UNIT 3616

10/683,603

SUBJECT : Request for Certificate of Correction on Patent No.: 7131652 B2

A response is requested with respect to the accompanying request for a certificate of correction.

Please complete this form and return with file, within 7 days to:
Palm location **7580, Certificates of Correction Branch – South Tower – 9A22**
If response is for an IFW, **return to employee (named below) via PUBSCofC Team in MADRAS.**
With respect to the change(s) requested, correcting Office and/or Applicant's errors, should the patent read as shown in the certificate of correction (COCIN)? No new matter should be introduced, nor should the scope or meaning of the claims be changed.

Thank You For Your Assistance

Elisha Evans
Certificates of Correction Branch
Tel. No. 703-308-9390 EXT 110

The request for issuing the above-identified correction(s) is hereby:
Note your decision on the appropriate box.

- ☒ **Approved** — **All** changes apply.
- ☐ **Approved in Part** — Specify below which changes **do not** apply.
- ☐ **Denied** — State the reasons for denial below.

Comments:

PAUL N. DICKSON 8/1/07
SUPERVISORY PATENT EXAMINER
TECHNOLOGY CENTER 3600
SPE

3616
Art Unit

UNITED STATES PATENT AND TRADEMARK OFFICE

UNITED STATES DEPARTMENT OF COMMERCE
United States Patent and Trademark Office
Address: COMMISSIONER FOR PATENTS
P.O. Box 1450
Alexandria, Virginia 22313-1450
www.uspto.gov

QUALCOMM INCORPORATED
5775 MOREHOUSE DR.
SAN DIEGO, CA 92121

Mail Date: 05/18/2010

Applicant	: Roland Rick	: DECISION ON REQUEST FOR
Patent Number	: 7620029	: RECALCULATION of PATENT
Issue Date	: 11/17/2009	: TERM ADJUSTMENT IN VIEW
Application No	: 10/683,640	: OF WYETH AND NOTICE OF INTENT TO
Filed	: 10/09/2003	: ISSUE CERTIFICATE OF CORRECTION
		:

The Request for Recalculation is **GRANTED** to the extent indicated.

The patent term adjustment has been determined to be **1087** days. The USPTO will *sua sponte* issue a certificate of correction reflecting the amount of PTA days determined by the recalculation.

Prior to the issuance of the certificate of correction, the USPTO will afford patentee an opportunity to be heard and request reconsideration. Accordingly, patentee has **one month or thirty (30) days**, whichever is longer, to file a request for reconsideration of this patent term adjustment calculation. See 35 U.S.C. 154(b)(3)(B)(ii) and 37 CFR 1.322(a)(4). No extensions of time will be granted under 37 CFR 1.136.

Patentee should use document code PET.OP if electronically filing a request for reconsideration of this patent term adjustment calculation. The patentee must also include the information required by 37 CFR 1.705(b)(2) and the fee required by 37 CFR 1.18(e). If patentee does not file a timely request for reconsideration of this patent term adjustment calculation including the information required by 37 CFR 1.705(b)(2) and the fee required by 37 CFR 1.18(e), the USPTO will issue a certificate of correction reflecting the PTA determination noted above.

Patentee should be aware that in order to preserve the right to review in the United States District Court for the District of Columbia of the USPTO patent term adjustment determination, patentee must ensure that he or she also take the steps required under 35 U.S.C. 154(b)(4)(A) in a timely manner. Nothing in the request for recalculation should be construed as providing an alternative time frame for commencing a civil action under 35 U.S.C. 154(b)(4)(A).

Any questions concerning this decision should be directed to the Office of Patent Legal Administration at 571-272-7702.

UNITED STATES PATENT AND TRADEMARK OFFICE

Commissioner for Patents
United States Patent and Trademark Office
P.O. Box 1450
Alexandria, VA 22313-1450
www.uspto.gov

MAILED
FROM DIRECTORS OFFICE

DEC 0 3 2004

TECHNOLOGY CENTER 3600

CRAIG W. RODDY
HALLIBURTON ENERGY SERVICES
P.O. BOX 1431
DUNCAN, OK 73536-0440

In re application of : **DECISION ON PETITION**
Jiten Chatterji, et al : **TO MAKE SPECIAL**
Application No. 10/683,644 : **(APPLICANT'S AGE)**
Filed: October 10, 2003 :
For: METHODS OF FRACTURING A SUBTERRANEAN FORMATION USING A PH DEPENDENT FOAMED FRACTURING FLUID

This is a decision on the petition submitted on October 10, 2003 under 37 CFR 1.102 (c) to make the above-identified application special under the accelerated examination procedure set forth in MPEP 708.02, Section IV: Applicant's Age.

The petition is **GRANTED**.

An application may be accorded special status upon the filing of a petition providing evidence showing that the applicant is at least 65 years old. Such a showing may be provided by evidence such as a birth certificate or a statement from the applicant.

The evidence submitted with the petition is a declaration signed by Jiten Chatterji indicating that he is at least 65 years of age.

The examiner is directed (1) to make an interference search for possible interfering applications, (2) to promptly examine this application out of turn, and (3) if any interfering application is discovered, to examine such application simultaneously and state in the first official letter of such application that it is being taken out of turn because of a possible interference.

Petitioner is advised that this application will continue to be special, throughout its entire prosecution and pendency, including interference or appeal, if any, only if petitioner makes a prompt ***bona fide*** effort, in response to each Office action, to place the application in condition for allowance, even if it is necessary to conduct an interview with the examiner to accomplish this purpose.

SUMMARY: Petition to Make Special **GRANTED**.

Randolph A. Reese
Special Programs Examiner
Technology Center 3600
(703) 308-2121

RAR/dcg: 10/20/04

UNITED STATES PATENT AND TRADEMARK OFFICE

Commissioner for Patents
United States Patent and Trademark Office
P.O. Box 1450
Alexandria, VA 22313-1450
www.uspto.gov

David W. Lynch
Chambliss, Bahner & Stophel
1000 Tallan Square-H
Two Union Square
Chattanooga, TN 37402

COPY MAILED

SEP 29 2006

OFFICE OF PETITIONS

In re Application of :
Cideciyan et al. :
Application No. 10/683,646 : DECISION ON PETITION
Filed: October 10, 2003 :
Attorney Docket No. HSJ920030151US1 :

This is a decision on the petition under 37 CFR 1.137(b), filed on March 24, 2006, to revive the above-identified application. The petition was recently forwarded to the Office of Petitions for a decision on its merits. The Office apologizes for any inconvenience.

The application became abandoned on October 28, 2005, for failure to file a timely and proper response to the final Office action mailed on July 27, 2005, which set a three (3) month shortened statutory period for reply. The present petition preceded the mailing of a Notice of Abandonment.

Petitioner has met the requirements to revive the above-identified application pursuant to 37 CFR 1.137(b). Petitioner submitted the required reply in the form of a Notice of Appeal and an authorization to charge the requisite fees, and made a proper statement of unintentional delay. Accordingly, the petition is **granted. Petitioner must file an appeal brief within two months from the mailing date of this decision.**

The Office notes that the current large entity fee for filing a Notice of Appeal is $500.00, not $330.00. Therefore, the Office charged the correct fee of $500.00 to the Deposit Account as authorized.

This matter is being referred to Technology Center Art Unit 2627.

Telephone inquiries related to this decision may be directed to the undersigned at (571) 272-3211.

C-L Donnell

Christina Tartera Donnell
Senior Petitions Attorney
Office of Petitions

UNITED STATES PATENT AND TRADEMARK OFFICE

Commissioner for Patents
United States Patent and Trademark Office
P. O. Box 1450
Alexandria, VA 22313-1450
www.uspto.gov

MILLER PATENT SERVICES
2500 DOCKERY LANE
RALEIGH, NC 27606

COPY MAILED

SEP 16 2005

OFFICE OF PETITIONS

In re Application of :
Shai A. Laronne et al :
Application No. 10/683,655 : ON PETITION
Filed: October 10, 2003 :
Attorney Docket No. SNY-T5442.01 :

This is a decision on the petition filed September 15, 2005, which is being treated as a petition under 37 CFR 1.182, to correct the spelling of Inventor Hiroyuki Shinhai to Hiroyuki Shinkai.

The petition is **GRANTED.**

Telephone inquiries concerning this matter may be directed to Irvin Dingle at (571) 272-3210.

Irvin Dingle
Petitions Examiner
Office of Petitions

Attachment: Corrected Filing Receipt

UNITED STATES PATENT AND TRADEMARK OFFICE

Commissioner for Patents
United States Patent and Trademark Office
P.O. Box 1450
Alexandria, VA 22313-1450
www.uspto.gov

LYNN A. BUCKNER
P.O. BOX 609
CHICKAMAUGA GA 30707

COPY MAILED

JUN 19 2007

OFFICE OF PETITIONS

In re Application of :
Buckner et al. :
Application No. 10/683,674 : ON PETITION
Filed: October 14, 2003 :
:

This is a decision on the petition under the unintentional provisions of 37 CFR 1.137(b), filed September 29, 2006, to revive the above-identified application.

The petition is **DISMISSED**.

Any request for reconsideration of this decision must be submitted within TWO (2) MONTHS from the mail date of this decision. Extensions of time under 37 CFR 1.136(a) are permitted. The reconsideration request should include a cover letter entitled "Renewed Petition under 37 CFR 1.137(b)." This is **not** a final agency action within the meaning of 5 U.S.C. § 704.

The application became abandoned for failure to reply in a timely manner to the non-final Office action mailed, December 1, 2005, which set a shortened statutory period for reply of three (3) months. No extensions of time under the provisions of 37 CFR 1.136(a) were obtained. Accordingly, the application became abandoned on March 2, 2005.

A grantable petition under 37 CFR 1.137(b) must be accompanied by: (1) the required reply, unless previously filed; (2) the petition fee as set forth in 37 CFR 1.17(m); (3) a statement that the entire delay in filing the required reply from the due date for the reply until the filing of a grantable petition pursuant to 37 CFR 1.137(b) was unintentional; and (4) any terminal disclaimer (and fee as set forth in 37 CFR 1.20(d)) required by 37 CFR 1.137(d). Where there is a question as to whether either the abandonment or the delay in filing a petition under 37 CFR 1.137 was unintentional, the Director may require additional information. See MPEP 711.03(c)(II)(C) and (D). The instant petition lacks item (3).

The statement of delay is not acceptable. In this regard, petitioner's attention is directed to 37 CFR 1.33(b), which states:

> (b) Amendments and other papers. Amendments and other papers, except for written assertions pursuant to § 1.27(c)(2)(ii) of this part, filed in the application must be signed by:
>
> (1) A registered patent attorney or patent agent of record appointed in compliance with § 1.32(b);
>
> (2) A registered patent attorney or patent agent not of record who acts in a representative capacity under the provisions of § 1.34;
>
> (3) An assignee as provided for under §3.71(b) of this chapter; or
>
> (4) All of the applicants (§ 1.41(b)) for patent, unless there is an assignee of the entire interest and such assignee has taken action in the application in accordance with § 3.71 of this chapter.

An unsigned amendment (or other paper) or one not properly signed by a person having authority to prosecute the application is not entered. This applies, for instance, where the amendment (or other paper) is signed by only one of two applicants and the other applicant has not given the one signing a power of attorney.

Therefore, as the petition is not signed by all the inventors and the record herein fails to disclose that petitioner herein (Lynn A. Buckner) was ever given a power of attorney to act on behalf of inventor Don M. Buckner, Sr., or that petitioner Lynn A. Buckner is an assignee of the entire interest and has complied with the provisions of 37 CFR 3.73(b), the petition is considered to not contain a proper statement of unintentional delay.

Further correspondence with respect to this matter should be addressed as follows:

By Mail:
Mail Stop PETITION
Commissioner for Patents
P. O. Box 1450
Alexandria, VA 22313-1450

By hand:
U. S. Patent and Trademark Office
Customer Service Window, Mail Stop Petitions
Randolph Building
401 Dulany Street
Alexandria, VA 22314

The centralized facsimile number is **(571) 273-8300.**

Telephone inquiries concerning this decision should be directed to Christopher Bottorff at (571) 272-6052 or in his absence, the undersigned at (571) 272-7099.

David Bucci
Petitions Examiner
Office of Petitions

UNITED STATES PATENT AND TRADEMARK OFFICE

Commissioner for Patents
United States Patent and Trademark Office
P.O. Box 1450
Alexandria, VA 22313-1450
www.uspto.gov

COPY MAILED

OCT 0 1 2007

OFFICE OF PETITIONS

LYNN A. BUCKNER
P.O. Box 609
Chickamauga GA 30707

In re Application of :
Lynn A. BUCKNER et al. :
Application No. 10/683,674 : DECISION ON PETITION
Filed: October 14, 2003 :

This is a decision on the renewed petition under 37 CFR 1.137(b), filed August 6, 2007, to revive the above-identified application.

The petition is **GRANTED**.

The above-identified application became abandoned for failure to properly reply to the non-final Office action mailed December 1, 2005, which set a shortened statutory period for reply of three (3) months. No extensions of time under the provisions of 37 CFR 1.136(a) were obtained. Accordingly, the application became abandoned on March 2, 2005.

The petition satisfies the conditions for revival pursuant to the provisions of 37 CFR 1.137(b) in that (1) the reply in the form of a response to the non-final Office action; (2) the petition fee of $750; and (3) the required statement of unintentional delay have been received. Accordingly, the reply to the non-final Office action of December 1, 2005 is accepted as having been unintentionally delayed.

Telephone inquiries concerning this decision should be directed to Brian Sines at (571) 272-6051 or in his absence, the undersigned at (571) 272-7099.

The application file is being referred to Technology Center AU 3753 for appropriate action on the filed amendment.

David Bucci
Petitions Examiner
Office of Petitions

UNITED STATES PATENT AND TRADEMARK OFFICE

Commissioner for Patents
United States Patent and Trademark Office
P.O. Box 1450
Alexandria, VA 22313-1450
www.uspto.gov

August 2005

MATTINGLY, STANGER, MALUR, & BRUNDIDGE, P.C.
1800 DIAGONAL ROAD
SUITE 370
ALEXANDRIA, VA 22314

SEP 01 2005

In re Application of:
YASUTOMO YAMAMOTO ET AL.
Serial No.: 10/683,688
Filed: 09 October 2003
Docket: 81940.0063
Title: STORAGE SYSTEM THAT IS CONNECTED TO EXTERNAL STORAGE

DECISION ON PETITION TO MAKE SPECIAL UNDER 37 C.F.R. § 1.102(d)

This is a decision on the petition filed on July 9, 2004, to make the above-identified application special under the accelerated examination procedure set forth in MPEP § 708.02(VIII) in accordance with 37 C.F.R. § 1.102(d).

The petition to make the application special is **GRANTED**.

In support of the petition, petition provides: a) the applicable petition fee; b) a statement that a pre-examination search was made, including the search areas; c) a statement that all claims are directed towards a single invention, and an intent to elect without traverse should election be required; and d) a detailed discussion of each of a number of references submitted as being pertinent to patentability, pointing out how the claimed subject matter is distinguishable over those references.

For accelerated examination under MPEP § 708.02(VIII) in accordance with 37 C.F.R. § 1.102(d), a petition with the following showing is required: a) a petition fee; b) all claims are directed to a single invention; c) a statement that a pre-examination search was made, including the search areas; d) a copy of each of the (non-US) references deemed most closely related to the claimed subject matter; and e) a detailed discussion of the references pointing out with the particularity required by 37 CFR 1.111 (b) and (c), how the claimed subject matter is distinguishable over the references.

The requirements of MPEP § 708.02(VIII)(a) – (e) are considered to have been met. The application will be advanced out of turn for examination, and will continue to be treated as special throughout the entire prosecution in the Office according to the procedure set forth in MPEP § 708.02(VIII).

The application file is being forwarded to the examiner for expedited prosecution.

If the examiner can make this application special without prejudice to any possible interfering applications, and he/she should make a rigid search for such, he/she is authorized to do so for the next action. Should the application be rejected, the application will not be considered special for the subsequent action unless the applicant promptly makes a bona fide effort to place the application in condition for allowance, even if it is necessary to have an interview with the examiner to accomplish this purpose.

If the examiner finds any interfering application for the same subject matter, he/she should consider such application simultaneously with this application and should state in the official letter of such application that he/she is taking it out of its turn because of possible interference.

Should an appeal be taken in this application or should this application becomes involved in an interference, consideration of the appeal and the interference will be expedited by all Patent and Trademark Office officials concerned, contingent likewise upon diligent prosecution by the applicant.

After allowance, this application will be given priority for printing. See M.P.E.P. § 1309.

Any inquiry regarding this decision should be directed to Hien H. Phan, Special Program Examiner, at (571) 272-1606.

Hien H. Phan, Special Program Examiner
Technology Center 2800 - Semiconductors,
Electrical & Optical Systems & Components

UNITED STATES PATENT AND TRADEMARK OFFICE

Commissioner for Patents
United States Patent and Trademark Office
P.O. Box 1450
Alexandria, VA 22313-1450
www.uspto.gov

WAGNER MURABITY & HAO LLP
THIRD FLOOR
TWO NORTH MARKET STREET
SAN JOSE, CA 95113

COPY MAILED

FEB 16 2006

OFFICE OF PETITIONS

In re Application of	:	
Mike Pelham et al	:	
Application No. 10/683,732	:	DECISION GRANTING PETITION
Filed: October 10, 2003	:	UNDER 37 CFR 1.313(c)(2)
Attorney Docket No. TRAN-P191	:	

This is a decision on the petition, filed February 14, 2006, under 37 CFR 1.313(c)(2) to withdraw the above-identified application from issue after payment of the issue fee.

The petition is **GRANTED**.

The above-identified application is withdrawn from issue for consideration of a submission under 37 CFR 1.114 (request for continued examination). See 37 CFR 1.313(c)(2).

Petitioner is advised that the issue fee paid on January 30, 2006 in the above-identified application cannot be refunded. If, however, the above-identified application is again allowed, petitioner may request that it be applied towards the issue fee required by the new Notice of Allowance.[1]

Telephone inquiries should be directed to the undersigned at (571) 272-3218.

This matter is being referred to Technology Center AU 2811 for processing of the request for continued examination under 37 CFR 1.114 and for consideration of the Information Disclosure Statement.

Frances Hicks
Petitions Examiner
Office of Petitions

C:\Documents and Settings\FHicks\My Documents\470\Feb9\683732.wpd

---

[1] *The request to apply the issue fee to the new Notice may be satisfied by completing and returning the new Issue Fee Transmittal Form PTOL-85(b) (along with any balance due at the time of payment), which includes the following language thereon: "Commissioner for Patents is requested to apply the Issue Fee and Publication Fee (if any) or re-apply any previously paid issue fee to the application identified above." Petitioner is advised that, whether a fee is indicated as being due or not, the Issue Fee Transmittal Form* ***must*** *be completed and timely submitted to avoid abandonment. Note the language in bold text on the first page of the Notice of Allowance and Fee(s) Due (PTOL-85).*

UNITED STATES PATENT AND TRADEMARK OFFICE

Commissioner for Patents
United States Patent and Trademark Office
P.O. Box 1450
Alexandria, VA 22313-1450
www.uspto.gov

MAILED

SEP 22 2004

DIRECTOR'S OFFICE
TECHNOLOGY CENTER 3600

CRAIG W. RODDY
HALLIBURTON ENERGY SERVICES
P.O. BOX 1431
DUNCAN, OK 73536-0440

In re application of : **DECISION ON PETITION**
Jiten Chatterj, et al. : **TO MAKE SPECIAL**
Application No. 10/683,736 : **(APPLICANT'S AGE)**
Filed: October 10, 2003 :
For: METHODS OF CEMENTING SUBTERRANEAN ZONES WITH CEMENT COMPOSITIONS HAVING ENHANCED COMPRESSIVE STRENGTHS

This is a decision on the petition submitted on October 10, 2003 under 37 CFR 1.102 (c) to make the above-identified application special under the accelerated examination procedure set forth in MPEP 708.02, Section IV: Applicant's Age.

The petition is **GRANTED**.

An application may be accorded special status upon the filing of a petition providing evidence showing that the applicant is at least 65 years old. Such a showing may be provided by evidence such as a birth certificate or a statement from the applicant.

The evidence submitted with the petition is a declaration signed by Jiten Chatterji indicating that he is at least 65 years of age.

The examiner is directed (1) to make an interference search for possible interfering applications, (2) to promptly examine this application out of turn, and (3) if any interfering application is discovered, to examine such application simultaneously and state in the first official letter of such application that it is being taken out of turn because of a possible interference.

Petitioner is advised that this application will continue to be special, throughout its entire prosecution and pendency, including interference or appeal, if any, only if petitioner makes a prompt ***bona fide*** effort, in response to each Office action, to place the application in condition for allowance, even if it is necessary to conduct an interview with the examiner to accomplish this purpose.

SUMMARY: Petition to Make Special **GRANTED**.

Kenneth J. Domer
Special Programs Examiner
Technology Center 3600
(703) 308-0866

KJD/dcg: 9/14/04

UNITED STATES PATENT AND TRADEMARK OFFICE

Commissioner for Patents
United States Patent and Trademark Office
P.O. Box 1450
Alexandria, VA 22313-1450
www.uspto.gov

MAILED
FROM DIRECTORS OFFICE

JUL 23 2007

TECHNOLOGY CENTER 3600

THOMTE MAZOUR AND NIEBERGALL LLC
2120 S 72ND ST STE 1111
OMAHA, NE 68124

In re patent of
Trevor Lienemann
Patent No. 6,789,505
Issued: September 14, 2004
For: HAY SAVER INSERT

LETTER OF ACKNOWLEDGEMENT AND NOTIFICATION OF IMPROPER PRIOR ART CITATION UNDER 37 CFR 1.501

The prior art citation filed by the patent owner under 37 CFR 1.501 on March 1, 2007 has been received and reviewed by the Patent and Trademark Office. The requirements for a proper prior art citation under 37 CFR 1.501 are as follows:

A) Prior art submitted must be limited to "written prior art consisting of patents and publications". Any submission that contains any issue not directed to patents and publications will not be entered into the file and will be returned unconsidered, despite the fact that it may also contain "properly considerable" prior art. MPEP 2205.

B) An explanation of how the person submitting the prior art considers it to be pertinent and applicable to the patent and believes to have a bearing on the patentability of any claim of the patent.

C) If filed by a party other than the patent owner, an indication must be present that a copy of the submission has been served on the patent owner, or includes a duplicate copy if service on the patent owner was not possible.

The prior art submission of March 1, 2007 lacks items (A) and (B) above. As to (A), the submissions refer to the sale of a product and not to publications. As to (B), the citation submitted lacks any explanation of how the patent owner considers the references to be pertinent and applicable to the patent and believes to have a bearing on the patentability of any claim of the patent. Accordingly, the submission is hereby returned to the patent owner as an attachment to this Notification as per the procedure outlined in MPEP 2206.

Telephone inquiries relative to this letter should be directed to Special Programs Examiner Kenneth J. Dorner at (571) 272-6587.

Donald Hajec, Director
Patent Technology Center 3600
(571) 272-5150

kjd: 7/16/07

Attachment: Citation of Prior Art Re: U.S. Patent No. 6,789,505 Pursuant to 37 CFR 1.501 filed March 1, 2007

UNITED STATES PATENT AND TRADEMARK OFFICE

Commissioner for Patents
United States Patent and Trademark Office
P.O. Box 1450
Alexandria, VA 22313-1450
www.uspto.gov

COPY MAILED

OCT 2 4 2007

OFFICE OF PETITIONS

NALCO COMPANY
1601 W. DIEHL ROAD
NAPERVILLE IL 60563-1198

In re Application of :
Scheimann, David W. :
Application No. 10/683,739 : ON PETITION
Filed: October 13, 2003 :
Attorney Docket No. 7751 :

This is a decision on the petition under 37 C.F.R. § 1.137(b), filed October 1, 2007, to revive the above-identified application.

The petition is **DISMISSED**.

Any request for reconsideration must be submitted within TWO (2) MONTHS from the mail date of this decision. No further petition fee is required for the request. Extensions of time under 37 CFR 1.136(a) are permitted. The reconsideration request should include a cover letter entitled "Renewed Petition under 37 CFR 1.137(b)." This is **not** a final agency action within the meaning of 5 U.S.C. § 704.

This application became abandoned for failure to timely reply to the final Office action mailed February 7, 2007. A three-month extension of time under the provisions of 37 CFR 1.136(a) was obtained. Accordingly, this application became abandoned on August 8, 2007. A Notice of Abandonment was mailed August 23, 2007.

A grantable petition under 37 CFR 1.137(b) must be accompanied by:
(1) the required reply,[1]
(2) the petition fee,
(3) a statement that the entire delay in filing the required reply from the due date for the reply until the filing of a grantable petition pursuant to 37 CFR 1.137(b) was unintentional, and
(4) a terminal disclaimer and fee if the application was filed on or before June 8, 1995 or if the application is a design application.

Where there is a question as to whether either the abandonment or the delay in filing a petition under 37 CFR 1.137 was unintentional, the Commissioner may require additional information.[2]

---

[1] In a nonprovisional application abandoned for failure to prosecute, the required reply may be met by the filing of a continuing application. In an application or patent, abandoned or lapsed for failure to pay the issue fee or any portion thereof, the required reply must be the payment of the issue fee or any outstanding balance thereof.

[2] See MPEP 711.03(c)(III)(C) and (D).

The instant petition lacks item(s) (1). The Amendment submitted to the Examiner on August 7, 2007 failed to place the above-identified application in prima facie condition for allowance. A proper reply to a final rejection under 37 CFR 1.113 may be: (1) an amendment, which places the application in condition for allowance; (2) a Notice of Appeal (with appeal fee); or (3) a Request for Continued Examination (RCE) in compliance with 37 CFR 1.114. Petitioner must submit one of the above documents in order to revive the above-identified application.

The Advisory Action issued by the Examiner and previously mailed on August 15, 2007 is enclosed.

Further correspondence with respect to this matter should be addressed as follows:

By mail: Mail Stop PETITIONS
Commissioner for Patents
Post Office Box 1450
Alexandria, VA 22313-1450

By hand: Customer Window located at:

U.S. Patent and Trademark Office
Customer Service Window Randolph Building
401 Dulany Street
Alexandria, VA 22314

By fax: (571) 273-8300
ATTN: Office of Petitions

Any questions concerning this matter may be directed to the undersigned at (571) 272-3206.

Liana Walsh
Petitions Examiner
Office of Petitions

Enclosure – Advisory Action

UNITED STATES PATENT AND TRADEMARK OFFICE

UNITED STATES DEPARTMENT OF COMMERCE
United States Patent and Trademark Office
Address: COMMISSIONER FOR PATENTS
P.O. Box 1450
Alexandria, Virginia 22313-1450
www.uspto.gov

APPLICATION NO.	FILING DATE	FIRST NAMED INVENTOR	ATTORNEY DOCKET NO.	CONFIRMATION NO.
10/683,739	10/13/2003	David W. Scheimann	7751	2797

49459 7590 08/15/2007

NALCO COMPANY
1601 W. DIEHL ROAD
NAPERVILLE, IL 60563-1198

EXAMINER	
SAYALA, CHHAYA D	
ART UNIT	**PAPER NUMBER**
1761	
MAIL DATE	**DELIVERY MODE**
08/15/2007	PAPER

Please find below and/or attached an Office communication concerning this application or proceeding.

The time period for reply, if any, is set in the attached communication.

Advisory Action Before the Filing of an Appeal Brief	Application No. 10/683,739	Applicant(s) SCHEIMANN, DAVID W.	
	Examiner C. SAYALA	Art Unit 1761	

--The MAILING DATE of this communication appears on the cover sheet with the correspondence address --

THE REPLY FILED 07 August 2007 FAILS TO PLACE THIS APPLICATION IN CONDITION FOR ALLOWANCE.

1. ☒ The reply was filed after a final rejection, but prior to or on the same day as filing a Notice of Appeal. To avoid abandonment of this application, applicant must timely file one of the following replies: (1) an amendment, affidavit, or other evidence, which places the application in condition for allowance; (2) a Notice of Appeal (with appeal fee) in compliance with 37 CFR 41.31; or (3) a Request for Continued Examination (RCE) in compliance with 37 CFR 1.114. The reply must be filed within one of the following time periods:
   a) ☒ The period for reply expires 3 months from the mailing date of the final rejection.
   b) ☐ The period for reply expires on: (1) the mailing date of this Advisory Action, or (2) the date set forth in the final rejection, whichever is later. In no event, however, will the statutory period for reply expire later than SIX MONTHS from the mailing date of the final rejection.

   Examiner Note: If box 1 is checked, check either box (a) or (b). ONLY CHECK BOX (b) WHEN THE FIRST REPLY WAS FILED WITHIN TWO MONTHS OF THE FINAL REJECTION. See MPEP 706.07(f).

Extensions of time may be obtained under 37 CFR 1.136(a). The date on which the petition under 37 CFR 1.136(a) and the appropriate extension fee have been filed is the date for purposes of determining the period of extension and the corresponding amount of the fee. The appropriate extension fee under 37 CFR 1.17(a) is calculated from: (1) the expiration date of the shortened statutory period for reply originally set in the final Office action; or (2) as set forth in (b) above, if checked. Any reply received by the Office later than three months after the mailing date of the final rejection, even if timely filed, may reduce any earned patent term adjustment. See 37 CFR 1.704(b).

NOTICE OF APPEAL

2. ☐ The Notice of Appeal was filed on _____. A brief in compliance with 37 CFR 41.37 must be filed within two months of the date of filing the Notice of Appeal (37 CFR 41.37(a)), or any extension thereof (37 CFR 41.37(e)), to avoid dismissal of the appeal. Since a Notice of Appeal has been filed, any reply must be filed within the time period set forth in 37 CFR 41.37(a).

AMENDMENTS

3. ☐ The proposed amendment(s) filed after a final rejection, but prior to the date of filing a brief, will not be entered because
   (a) ☐ They raise new issues that would require further consideration and/or search (see NOTE below);
   (b) ☐ They raise the issue of new matter (see NOTE below);
   (c) ☐ They are not deemed to place the application in better form for appeal by materially reducing or simplifying the issues for appeal; and/or
   (d) ☐ They present additional claims without canceling a corresponding number of finally rejected claims.

   NOTE: _____. (See 37 CFR 1.116 and 41.33(a)).
4. ☐ The amendments are not in compliance with 37 CFR 1.121. See attached Notice of Non-Compliant Amendment (PTOL-324).
5. ☐ Applicant's reply has overcome the following rejection(s): _____.
6. ☐ Newly proposed or amended claim(s) _____ would be allowable if submitted in a separate, timely filed amendment canceling the non-allowable claim(s).
7. ☒ For purposes of appeal, the proposed amendment(s): a) ☐ will not be entered, or b) ☒ will be entered and an explanation of how the new or amended claims would be rejected is provided below or appended.

   The status of the claim(s) is (or will be) as follows:
   Claim(s) allowed: _____.
   Claim(s) objected to: _____.
   Claim(s) rejected: 1-17.
   Claim(s) withdrawn from consideration: _____.

AFFIDAVIT OR OTHER EVIDENCE

8. ☐ The affidavit or other evidence filed after a final action, but before or on the date of filing a Notice of Appeal will not be entered because applicant failed to provide a showing of good and sufficient reasons why the affidavit or other evidence is necessary and was not earlier presented. See 37 CFR 1.116(e).
9. ☐ The affidavit or other evidence filed after the date of filing a Notice of Appeal, but prior to the date of filing a brief, will not be entered because the affidavit or other evidence failed to overcome all rejections under appeal and/or appellant fails to provide a showing a good and sufficient reasons why it is necessary and was not earlier presented. See 37 CFR 41.33(d)(1).
10. ☐ The affidavit or other evidence is entered. An explanation of the status of the claims after entry is below or attached.

REQUEST FOR RECONSIDERATION/OTHER

11. ☒ The request for reconsideration has been considered but does NOT place the application in condition for allowance because: see attached.
12. ☐ Note the attached Information Disclosure Statement(s). (PTO/SB/08) Paper No(s). _____
13. ☐ Other: _____.

C Sayala

CHHAYA D. SAYALA
PRIMARY EXAMINER

Response to Arguments

Applicant's arguments filed 8/7/2007 have been fully considered but they are not persuasive.

Even though applicant has argued that the structures of the polymers of the invention are "flexible" and that the reference polymers are "rigid" and that the claims to the invention are to "flexible" polymers, no such distinction is seen from the claim recitation. In fact, applicant admits that "While it may be true that some of the same polymer monomers or building blocks may be similar, there are significant differences in the organization of the molecules in the polymer chain. " A review of the claim vis-à-vis the reference shows that the claim does not distinguish any organization and in fact, the claims have been met by the reference to the extent described in the rejection.

Next, applicant states that "There are significant differences in the papermaking process and the grain dry milling operations both in overall scope and also from a unit operation standpoint. It would be very difficult to compare them and call them "similar processes"." This is vigorously disagreed with. First, no distinction is made in the specification, and second, whether it is papermaking or stillage solids, the polymer is added to cause flocculation in order to dewater, that is, the polymer is being relied on for its properties to agglomerate and flocculate the solids, and since the monomers claimed are the same reference and the reference shows that such coagulation and flocculation was achieved, then it can be reasonably expected to do the same when it is added to stillage solids.

Finally, applicant states that "In the papermaking process cellulosic fibers and other materials are added to the process stream and it's an overall goal to trap them and recover them in the sheet of paper that is being formed in the process.

In the corn dry grind process discussed in this patent application is not a cellulosic process."

This is also disagreed with. US Patent 5958233 to Willgohs, already made of record by the examiner in the last Office action , states "Stillage in general has a complex composition; this is true especially for corn stillage, which includes the non-fermented fibers from the hull and tipcap of the corn kernel, as well as, particles of the corn germ with high oil content, oil and other lipids, the non-fermented portions of the corn kernel such as gluten, any residual unreacted starch, solubles such as proteins and enzymes, and the byproducts and residue of fermentation including dead yeast cells."

Therefore, dewatering stillage solids is a cellulosic process since it contains non-fermented fibers.

Furthermore, the specification has been thoroughly reviewed and if indeed, applicant is claiming "flexible" polymers versus "rigid" polymers of prior art, then there is no recitation of such a limitation in the claims, and certainly no assertion of any unobvious result in this regard in the specification, either. Therefore, applicant's statement that "Testing conducted with early versions of the structurally rigid polymers showed that they did not provide the performance benefit of the more flexible types of polymer chemistries identified in this patent application. " does not aid in distinguishing the claims over art applied. In fact, the specification makes no mention of any type of polymer, flexible or otherwise, or any testing. The claims recite "one or more anionic monomers selected from acrylic acid sodium salt, 2-acrylamido-2-methyl-1-propanesulfonic acid sodium salt and methacrylic acid sodium salt and optionally one or more acrylamide monomers" and the reference teaches just that to coagulate and flocculate solids in a dewatering process.

The rejection will be maintained. Applicant is also urged to review the references made of record in the last Office action, that are found to be pertinent to the claimed subject matter.

Conclusion

Any inquiry concerning this communication or earlier communications from the examiner should be directed to C. Sayala whose telephone number is (571) 272-1405. The fax phone number for the organization where this application or proceeding is assigned is 571-273-8300.

Information regarding the status of an application may be obtained from the Patent Application Information Retrieval (PAIR) system. Status information for published applications may be obtained from either Private PAIR or Public PAIR. Status information for unpublished applications is available through Private PAIR only. For more information about the PAIR system, see http://pair-direct.uspto.gov. Should you have questions on access to the Private PAIR system, contact the Electronic Business Center (EBC) at 866-217-9197 (toll-free). If you would like assistance from a USPTO

Customer Service Representative or access to the automated information system, call 800-786-9199 (IN USA OR CANADA) or 571-272-1000.

C. SAYALA
Primary Examiner
Group 1700.

UNITED STATES PATENT AND TRADEMARK OFFICE

Commissioner for Patents
United States Patent and Trademark Office
P.O. Box 1450
Alexandria, VA 22313-1450
www.uspto.gov

NALCO COMPANY
1601 W. DIEHL ROAD
NAPERVILLE IL 60563-1198

COPY MAILED

NOV 19 2007

OFFICE OF PETITIONS

In re Application of :
Scheimann, David W. :
Application No. 10/683,739 : DECISION ON PETITION
Filed: October 13, 2003 :
Attorney Docket No. 7751 :

This is a decision on the renewed petition under the unintentional provisions of 37 CFR 1.137(b), filed October 29, 2007, to revive the above-identified application.

The petition is **GRANTED**.

The petition satisfies the requirements of 37 CFR 1.137(b) in that petitioner has supplied (1) the reply in the form of a Request for Continued Examination (RCE), (2) the petition fee, and (3) a proper statement of unintentional delay.

Telephone inquiries concerning this decision should be directed to the undersigned at (571) 272-3206.

This matter is being referred to Technology Center AU 1794 for further examination on the merits.

Liana Walsh
Petitions Examiner
Office of Petitions

UNITED STATES PATENT AND TRADEMARK OFFICE

Commissioner for Patents
United States Patent and Trademark Office
P.O. Box 1450
Alexandria, VA 22313-1450
www.uspto.gov

CARLSON GASKEY & OLDS/PRATT & WHITNEY
400 WEST MAPLE ROAD
SUITE 350
BIRMINGHAM, MI 48009

COPY MAILED
FEB 07 2008
OFFICE OF PETITIONS

In re Application of :
Shahram Farhangi :
Application No. 10/683,749 : ON PETITION
Filed: October 10, 2003 :
Attorney Docket No. 67397-040 PUS1 :

This is a decision on the petition under 37 CFR 1.137(b), filed October 17, 2007, to revive the above-identified application.

The petition is **GRANTED**.

The application became abandoned for failure to reply in a timely manner to the Restriction Requirement mailed March 26, 2007 which set a shortened statutory period for reply of one (1) month or thirty (30) days (whichever is later). No extensions of time under the provisions of 37 CFR 1.136(a) were obtained. Accordingly, the application became abandoned on April 27, 2007.

Telephone inquiries concerning this decision should be directed to Irvin Dingle at (571) 272-3210.

This matter is being referred to Technology Center AU 3746 for further processing.

Irvin Dingle
Petitions Examiner
Office of Petitions

UNITED STATES PATENT AND TRADEMARK OFFICE

Commissioner for Patents
United States Patent and Trademark Office
P.O. Box 1450
Alexandria, VA 22313-1450
www.uspto.gov

Date: 03/03/09

Patent No. : 7469544 B2
Ser. No. : 10/683,749
Inventor(s) : FARHANGI, SHAHRAM
Issued : 12/30/08
Title : **METHOD AND APPARATUS FOR INJECTING A FUEL INTO A COMBUSTOR ASSEMBLY**
Docket No. : **67397-040 PUS1**

Re: Request for Certificate of Correction

Consideration has been given your request for the issuance of a certificate of correction for the above-identified patent under the provisions of Rule(s) 1.322 and/or 1.323.

Assignees' names and addresses (assignment data) printed in a patent, are based *solely* on information supplied in the appropriate space for identifying the assignment data, i.e., item 3 of the Issue Fee Transmittal Form PTOL-85B. Granting of a request under 37 CFR 3.81(b) is required to correct applicant's error providing ***incorrect or erroneous*** assignment data, *before* issuance of a Certificate of Correction, under 37 CFR 1.323 *(see Manual of Patent Examining Procedures (M.P.E.P) Chp.1400, sect. 1481).* This procedure is required *at any time after the issue fee is paid*, including after issuance of the patent.

In view of the foregoing, your request, in this mater, is hereby denied.

A request to correct the Assignee under 37 CFR 3.81(b) should include:

A. **the processing fee set forth in 37 CFR 1.117(h) (currently $130);**
B. a statement that the failure to include the correct assignee name on the PTOL-85B was inadvertent; and
C. a copy of the Notice of Recordation of Assignment Document, reflecting the reel and frame number where the assignment(s) is recorded and/or reflecting proof of *the date* the assignment was submitted for recordation.

In the Request, Applicant(s) may request that the file be forwarded to Certificates of Correction Branch, for issuance of a Certificate of Correction, if the Request is granted.

Any request under 37 CFR 3.81(b) should be directed to the following address or facsimile number:

By mail: Mail Stop PETITIONS

Commissioner for Patents
Post Office Box 1450
Alexandria, VA 22313-1450

By hand: Customer Service Window
Mail Stop Petitions
Randolph Building
401 Dulany Street
Alexandria, VA 22314

By fax: (571) 273-0025
ATTN: Office of Petitions

If a fee (currently $100) was previously submitted for consideration of a Request for Certificate of Correction, under CFR 1.323, to correct assignment data, no additional fee is required.

A certificate of correction will be issued to correct the remaining errors noted in your request.

Lamonte M. Newsome

Lamonte M. Newsome
For Mary Diggs, Supervisor
Decisions & Certificates
Of Correction Branch
(703) 305-8309 or (703) 308-9390 #112

CARLSON, GASKEY & OLDS/PRATT & WHITNEY
400 WEST MAPLE ROAD
SUITE 350
BIRMINGHAM MI 48009

LMN

UNITED STATES PATENT AND TRADEMARK OFFICE

Commissioner for Patents
United States Patent and Trademark Office
P.O. Box 1450
Alexandria, VA 22313-1450
www.uspto.gov

CARLSON GASKEY & OLDS/PRATT & WHITNEY
400 WEST MAPLE ROAD
SUITE 350
BIRMINGHAM, MI 48009

COPY MAILED

MAR 23 2009

OFFICE OF PETITIONS

In re Patent No. 7,469,544 :
Issue Date: December 30, 2008 :
Application No. 10/683,749 : ON PETITION
Filed: October 10, 2003 :
Attorney Docket No. 67397-040 PUS1 :

This is a decision on the petition filed February 19, 2009, under 37 CFR 3.81(b)[1] to correct the assignee's name on the front page of the above-identified patent by way of a Certificate of Correction.

The petition is **granted.**

Telephone inquiries concerning this matter may be directed to the undersigned at (571) 272-3210. Any questions concerning the issuance of the Certificate of Correction should be directed to the Certificates of Correction Branch at (703) 305-8309.

This application is being forwarded to the Certificates of Correction Branch for issuance of the requested Certificate of Correction.

Irvin Dingle
Petitions Examiner
Office of Petitions

[1] See Official Gazette of June 22, 2004

Docket No. 67397-040PUS1

UNITED STATES PATENT AND TRADEMARK OFFICE

PATENT NO.: 7,469,544 B2

APPLICATION NO.: 10/683,749

GRANT DATE: December 30, 2008

INVENTOR(S): Shahram Farhangi

FOR: METHOD AND APPARATUS FOR INJECTING A FUEL INTO A COMBUSTOR ASSEMBLY

PETITION TO CORRECT ASSIGNEE UNDER 37 CFR 3.81(b)

Mail Stop: PETITIONS
Commissioner for Patents
P. O. Box 1450
Alexandria, VA 22313-1450

Dear Sir:

Applicant hereby requests that Patent No. 7,469,544 be corrected to reflect the correct assignee, Pratt & Whitney Rocketdyne, Inc. The name and address of the assignee is: Pratt & Whitney Rocketdyne, Inc., 6633 Canoga Avenue, Canoga Park, California 91309. The assignment was submitted for recordation as set forth in §3.11 on June 19, 2007, Reel/Frame: 019458/0247.

Applicant hereby requests that the file be forwarded to the Certificates of Correction Branch, for issuance of a Certificate of Correction, if this Petition is granted. A Certificate of Correction is also included with this Petition.

Adjustment Date: 03/23/2009 CKHLOK
[illegible] of 10683749
01 FC:1811 100.00 CR
02 FC:1808 130.00 CR

03/23/2009 CKHLOK 00000001 501482 7469544
01 FC:1811 100.00 DA
02 FC:1464 130.00 DA

The Commissioner is authorized to charge Deposit Account No. 50-1482, in the name of Carlson, Gaskey & Olds, P.C., for the $130 Petition fee and the $100 Certificate of Correction fee and any additional fees or credit the account for any overpayment.

Favorable consideration of this Petition is requested.

Respectfully submitted,

CARLSON, GASKEY & OLDS, P.C.

/David L. Wisz/

David L. Wisz
Registration No. 46,350
400 West Maple Rd., Ste. 350
Birmingham, MI 48009
Telephone: (248) 988-8630

Dated: February 19, 2009

UNITED STATES PATENT AND TRADEMARK OFFICE

Commissioner for Patents
United States Patent and Trademark Office
P.O. Box 1450
Alexandria, VA 22313-1450
www.uspto.gov

MOTOROLA INC
600 NORTH US HIGHWAY 45
W4 - 39Q
LIBERTYVILLE IL 60048-5343

COPY MAILED

MAR 13 2009

OFFICE OF PETITIONS

In re Application of :
Hao Bi et al. :
Application No. 10/683,761 : DECISION ON PETITION
Filed: October 10, 2003 :
Attorney Docket No. CS23796RA :

This is a decision on the petition under the unintentional provisions of 37 CFR 1.137(b), filed October 21, 2008, to revive the above-identified application.

The petition is **GRANTED**.

The application became abandoned for failure to reply in a timely manner to the non-final Office action mailed, March 10, 2008, which set a shortened statutory period for reply of three (3) months. No extensions of time under the provisions of 37 CFR 1.136(a) were obtained. Accordingly, the application became abandoned on June 11, 2008.

The petition satisfies the requirements of 37 CFR 1.137(b) in that petitioner has supplied (1) the reply in the form of an amendment, (2) the petition fee of $1,620, and (3) a proper statement of unintentional delay.

The application file does not indicate a change of address has been filed in this case, although the address given on the petition differs from the address of record. A change of address should be filed in this case in accordance with MPEP 601.03. A courtesy copy of this decision is being mailed to the address noted on the petition. However, until otherwise instructed, all future correspondence regarding this application will be mailed solely to the address of record.

Telephone inquiries concerning this decision should be directed to JoAnne Burke at (571) 272-4584.

This application is being referred to Technology Center AU 2617 for appropriate action by the Examiner in the normal course of business on the reply received.

Ramesh Krishnamurthy
Petitions Examiner
Office of Petitions

cc: Philip H. Burrus, IV
460 Grant Street SE
Atlanta, GA 30312

SPE RESPONSE FOR CERTIFICATE OF CORRECTION

Paper No.:08312005

DATE : August 31, 2005

TO SPE OF : ART UNIT 3612

SUBJECT : Request for Certificate of Correction on Patent No.: 6857692

A response is requested with respect to the accompanying request for a certificate of correction.

Please complete this form and return with file, within **7** days to:
Certificates of Correction Branch - PK 3-910
Palm location **7590** - Tel. No. 305-8201

With respect to the change(s) requested, correcting Office and/or Applicant's errors, should the patent read as shown in the certificate of correction? No new matter should be introduced, nor should the scope or meaning of the claims be changed.

Thank You For Your Assistance **Certificates of Correction Branch**

The request for issuing the above-identified correction(s) is hereby:
Note your decision on the appropriate box.

☐ **Approved** **All** changes apply.

☒ **Approved in Part** Specify below which changes **do not** apply.

☐ **Denied** State the reasons for denial below.

Comments:

Changes to Section [56] References Cited are not approved since these references have not been cited on either a PTO-892 or a PTO-1449.

SPE: Glenn Dayoan **Art Unit** 3612

SPE RESPONSE FOR CERTIFICATE OF CORRECTION

DATE : 4/21/08

Paper No.: ___

TO SPE OF : ART UNIT 2111

SUBJECT : Request for Certificate of Correction for Appl. No.: 10/683778 Patent No: 7047350 B2

A response is requested with respect to a request for a certificate of correction.

With respect to the change(s) requested to correct Office and/or Applicant's errors, should the patent read as shown in the certificate of correction attached herewith or the COCIN document(s), in IFW images for the above-identified patented application? No new matter should be introduced, nor should the scope or meaning of the claims be changed.

If the response is for an IFW, within **7** days, please complete and forward the response, to the employee (named below) via scanning into application images, using document code **COCX**.

If the response is for a paper file wrapper, please complete the response and forward the response with the paper file wrapper, to the employee (named below), within **7** days, to:

Certificates of Correction Branch (CofC)
South Tower - 9A22
Palm Location 7580

VIRGINIA TOLBERT
Certificates of Correction Branch
703-308-9390 ext. 113

Thank You For Your Assistance

The request for issuing the above-identified correction(s) is hereby:
Note your decision on the appropriate box.

- ☒ **Approved** /C.K./ — **All** changes apply.
- ☐ **Approved in Part** — Specify below which changes **do not** apply.
- ☐ **Denied** — State the reasons for denial below.

Comments: _____

_____

_____

_____

_____

_____ _____
SPE **Art Unit**

SPE RESPONSE FOR CERTIFICATE OF CORRECTION

DATE : 4/21/08

Paper No.: ___

TO SPE OF : ART UNIT 2111

SUBJECT : Request for Certificate of Correction for Appl. No.: 10/683778 Patent No: 7,134,350 B2

A response is requested with respect to a request for a certificate of correction.

With respect to the change(s) requested to correct Office and/or Applicant's errors, should the patent read as shown in the certificate of correction attached herewith or the COCIN document(s), in IFW images for the above-identified patented application? No new matter should be introduced, nor should the scope or meaning of the claims be changed.

If the response is for an IFW, within **7** days, please complete and forward the response, to the employee (named below) via scanning into application images, using document code **COCX**.

If the response is for a paper file wrapper, please complete the response and forward the response with the paper file wrapper, to the employee (named below), within **7** days, to:

Certificates of Correction Branch (CofC)
South Tower - 9A22
Palm Location 7580

VIRGINIA TOLBERT
Certificates of Correction Branch
703-308-9390 ext. 113

Thank You For Your Assistance

The request for issuing the above-identified correction(s) is hereby:
Note your decision on the appropriate box.

- ☒ **Approved** /C.K./ — **All** changes apply.
- ☐ **Approved in Part** — Specify below which changes **do not** apply.
- ☐ **Denied** — State the reasons for denial below.

Comments: _____

/Mark Rinehart/
Supervisory Patent Examiner
Art Unit 2111

SPE **Art Unit**

UNITED STATES PATENT AND TRADEMARK OFFICE

Commissioner for Patents
United States Patent and Trademark Office
P.O. Box 1450
Alexandria, VA 22313-1450
www.uspto.gov

MORRISON & FOERSTER LLP
755 PAGE MILL ROAD
PALO ALTO, CA 94304-1018

COPY MAILED

AUG 0 2 2007

OFFICE OF PETITIONS

In re Application of :
ROSENTHAL, et al. :
Application No. 10/683,815 : DECISION ON PETITION
Filed: October 9, 2003 : TO WITHDRAW
Attorney Docket No. PC19490A : FROM RECORD
:

This is a decision on the Request to Withdraw as attorney or agent of record under 37 C.F.R. § 1.36(b), filed March 16, 2007.

The request is **NOT APPROVED** as moot.

A review of the file record indicates that the power of attorney to **MORRISON & FOERSTER LLP** has been revoked by the assignee of the patent application on April 23, 2007. Accordingly, the request to withdraw under 37 C.F.R. § 1.36(b) is moot.

All future communications from the Office will continue to be directed to the below-listed address until otherwise notified by applicant.

Telephone inquires concerning this decision should be directed to the undersigned at 571-272-7253.

Monica A. Graves
Petitions Examiner
Office of Petitions

cc: **PFIZER INC.**
150 EAST 42ND STREET, 5TH FLOOR
STOP - 49
NEW YORK, NY 10017-5612

UNITED STATES PATENT AND TRADEMARK OFFICE

Commissioner for Patents
United States Patent and Trademark Office
P.O. Box 1450
Alexandria, VA 22313-1450
www.uspto.gov

DREIER LLP
499 PARK AVE
NEW YORK NY 10022

COPY MAILED

DEC 0 5 2007

OFFICE OF PETITIONS

In re Application of :
James D. BURCHETTA et al. :
Application No. 10/683,821 : DECISION DISMISSING PETITION
Filed: October 10, 2003 : UNDER 37 CFR 1.78(a)(3)
Attorney Docket No. 27110.012300 :

This is a decision on the petition under 37 CFR §§ 1.78(a)(3), filed October 16, 2006, to accept an unintentionally delayed claim under 35 U.S.C. § 120 for the benefit of the prior-filed nonprovisional applications set forth in the concurrently filed amendment.

The petition is **DISMISSED.**

A petition for acceptance of a claim for late priority under 37 CFR § 1.78(a)(3) is only applicable to those applications filed on or after November 29, 2000 and after the expiration of the period specified in 37 CFR §§ 1.78(a)(2)(ii). In addition, the petition under 37 CFR §§ 1.78(a)(3) must be accompanied by:

(1) the reference required by 35 U.S.C. § 120 and 37 CFR § 1.78(a)(2)(i) of the prior-filed application, unless previously submitted;
(2) the surcharge set forth in § 1.17(t); and
(3) a statement that the entire delay between the date the claim was due under 37 CFR §§ 1.78(a)(2)(ii) and the date the claim was filed was unintentional. The Commissioner may require additional where there is a question whether the delay was unintentional.

The petition does not comply with item (1).

37 CFR 1.78(a)(2)(i) requires that any nonprovisional application claiming the benefit of one or more prior-filed copending nonprovisional applications must contain or be amended to contain a reference to each such prior-filed application, identifying it by application number (consisting of the series code and serial number) and indicating the relationship of the applications. The

relationship between the applications is whether the subject application is a continuation, divisional, or continuation-in-part of a prior-filed nonprovisional application. An example of a proper benefit claim is: "This application is a continuation of Application No. 10/---, filed---." A benefit claim that merely states: "This application claims the benefit of Application No. 10/---, filed---," does not comply with 37 CFR 1.78(a)(2)(i) since the proper relationship, which includes the type of continuing application, is not stated. Also, the status of each nonprovisional parent application (if it is patented or abandoned) should also be indicated, following the filing date of the parent nonprovisional application. See MPEP Section 201.11, Rev. 2, May 2004, Reference to Prior Application. The amendment filed October 16, 2006 states that the present application is a continuation-in-part of U.S. Application No. 10/683,819 filed October 10, 2003; however U.S. Application No. 10/683,619 and the present application were both filed on October 10, 2003, therefore U.S. Application No. 10/683,619 cannot by definition be a continuation-in-part of this application.

For the above-stated reasons, the petition is **DISMISSED**

Before the petition under 37 CFR § 1.78(a)(3) can be granted, a renewed petition and a substitute amendment or an Application Data Sheet (complying with the provisions of 37 CFR 1.121 and 37 CFR 1.76(b)(5) and (6)) to correct the above matters are required.

Further correspondence with respect to this matter should be addressed as follows:

By mail:	Mail Stop PETITIONS Commissioner for Patents Post Office Box 1450 Alexandria, VA 22313-1450
By hand:	Customer Service Window Mail Stop Petitions Randolph Building 401 Dulany Street Alexandria, VA 22314
By fax:	(571) 273-8300 ATTN: Office of Petitions

Any questions concerning this matter may be directed to David Bucci at (571) 272-7099.

David Bucci
Petitions Examiner
Office of Petitions

UNITED STATES PATENT AND TRADEMARK OFFICE

Commissioner for Patents
United States Patent and Trademark Office
P.O. Box 1450
Alexandria, VA 22313-1450
www.uspto.gov

DREIER LLP
499 PARK AVE
NEW YORK NY 10022

COPY MAILED

APR 0 4 2008

OFFICE OF PETITIONS

In re Application of :
James D. BURCHETTA et al. :
Application No. 10/683,821 : DECISION DISMISSING PETITION
Filed: October 10, 2003 : UNDER 37 CFR 1.78(a)(3)
Attorney Docket No. 27110.012300 :

This is a decision on the renewed petition under 37 CFR § 1.78(a)(3), filed December 13, 2007, to accept an unintentionally delayed claim under 35 U.S.C. §120 for the benefit of prior-filed nonprovisional applications set forth in the concurrently filed amendment.

A petition for acceptance of a claim for late priority under 37 CFR § 1.78(a)(3) is only applicable to those applications filed on or after November 29, 2000 and after the expiration of the period specified in 37 CFR § 1.78(a)(2)(ii). In addition, the petition under 37 CFR § 1.78(a)(3) must be accompanied by:

(1) the reference required by 35 U.S.C. § 120 and 37 CFR 1.78(a)(2)(i) of the prior-filed application, unless previously submitted;

(2) the surcharge set forth in § 1.17(t); and

(3) a statement that the entire delay between the date the claim was due under 37 CFR § 1.78(a)(2)(ii) and the date the claim was filed was unintentional. The Commissioner may require additional where there is a question whether the delay was unintentional.

The petition does not comply with item (1).

The amendment is not acceptable as drafted since it improperly incorporates by reference the prior-filed applications. Petitioner's attention is directed to Dart Industries v. Banner, 636 F.2d 684, 207 USPQ 273 (C.A.D.C. 1980), where the court drew a distinction between a permissible 35 U.S.C. § 120 statement and the impermissible introduction of new matter by way of incorporation by reference in a 35 U.S.C. § 120 statement. The court specifically stated:

> Section 120 merely provides a mechanism whereby an application becomes entitled to benefit of the filing date of an earlier application disclosing the

same subject matter. Common subject matter must be disclosed, in both applications, either specifically or by an express incorporation-by-reference of prior disclosed subject matter. Nothing in section 120 itself operates to carry forward any disclosure from an earlier application. In re deSeversky, supra at 674, 177 USPQ at 146-147. Section 120 contains no magical disclosure-augmenting powers able to pierce new matter barriers. It cannot, therefore, "limit" the absolute and express prohibition against new matter contained in section 251.

In order for the incorporation by reference statement to be effective as a proper safeguard against the omission of a portion of a prior application, the incorporation by reference statement must be included in the specification-as-filed, or in an amendment specifically referred to in an oath or declaration executing the application. *See* In re deSeversky, *supra*. *Note also* MPEP 201.06(c).

For the above-stated reasons, the petition is **DISMISSED**

Before the petition under 37 CFR § 1.78(a)(3) can be granted, a renewed petition and a substitute amendment or an Application Data Sheet (complying with the provisions of 37 CFR 1.121 and 37 CFR 1.76(b)(5) and (6)) to correct the above matters are required.

Since the $1410 petition fee submitted with the response on December 13, 2007 was previously submitted with the petition filed October 16, 2006, this fee is unnecessary and will be credited to petitioner's deposit account no. 50-4026.

Further correspondence with respect to this matter should be addressed as follows:

By mail:	Mail Stop PETITIONS Commissioner for Patents Post Office Box 1450 Alexandria, VA 22313-1450
By hand:	Customer Service Window Mail Stop Petitions Randolph Building 401 Dulany Street Alexandria, VA 22314
By fax:	(571) 273-8300 ATTN: Office of Petitions

Any questions concerning this matter may be directed to David Bucci at (571) 272-7099.

David Bucci
Petitions Examiner
Office of Petitions

UNITED STATES PATENT AND TRADEMARK OFFICE

Commissioner for Patents
United States Patent and Trademark Office
P.O. Box 1450
Alexandria, VA 22313-1450
www.uspto.gov

Ostrow Kaufman & Frankl LLP
Susan Formicola
The Chrysler Building
405 Lexington Avenue, 62nd Floor
NEW YORK NY 10174

MAILED

APR 13 2009

OFFICE OF PETITIONS

In re Application of :
James D. BURCHETTA et al. :
Application No. 10/683,821 : DECISION ON PETITION
Filed: October 10, 2003 : UNDER 37 CFR 1.78(a)(3)
Attorney Docket No. 602097-009 :

This is a decision on the renewed petition under 37 CFR 1.78(a)(3), filed May 2, 2008, to accept an unintentionally delayed claim under 35 U.S.C. § 120 for the benefit of priority to the prior-filed nonprovisional applications set forth in the amendment filed with the petition.

The petition is **GRANTED**.

A petition for acceptance of a claim for late priority under 37 CFR 1.78(a)(3) is only applicable to those applications filed on or after November 29, 2000. Further, the petition is appropriate only after the expiration of the period specified in 37 CFR 1.78(a)(2)(ii). In addition, the petition under 37 CFR 1.78(a)(3) must be accompanied by:

(1) the reference required by 35 U.S.C. § 120 and 37 CFR 1.78(a)(2)(i) of the prior-filed application, unless previously submitted;
(2) the surcharge set forth in § 1.17(t); and
(3) a statement that the entire delay between the date the claim was due under 37 CFR 1.78(a)(2)(ii) and the date the claim was filed was unintentional. The Commissioner may require additional information where there is a question whether the delay was unintentional.

All the above requirements having been satisfied, the late claim for priority under 35 U.S.C. § 120 is accepted as being unintentionally delayed.

The granting of the petition to accept the delayed benefit claim to the prior-filed applications under 37 CFR 1.78(a)(3) should not be construed as meaning that this application is entitled to the benefit of the prior-filed applications. In order for this application to be entitled to the

benefit of the prior-filed applications, all other requirements under 35 U.S.C. § 120 and 37 CFR 1.78(a)(1) and (a)(2) must be met. Similarly, the fact that the corrected Filing Receipt accompanying this decision on petition includes the prior-filed applications should not be construed as meaning that applicant is entitled to the claim for benefit of priority to the prior-filed applications noted thereon. Accordingly, the examiner will, in due course, consider this benefit claim and determine whether the application is entitled to the benefit of the earlier filing date.

A corrected Filing Receipt, which includes the priority claim to the prior-filed nonprovisional applications, accompanies this decision on petition.

Any inquiries concerning this decision may be directed to the undersigned at (571) 272-7099. All other inquiries concerning either the examination procedures or status of the application should be directed to the Technology Center.

This application is being forwarded to Technology Center Art Unit 3691 for appropriate action on the amendment filed May 2, 2008, including consideration by the examiner of applicant's entitlement to claim benefit of priority under 35 U.S.C. § 120 to the prior-filed applications

David Bucci
Petitions Examiner
Office of Petitions

ATTACHMENT: Corrected Filing Receipt

UNITED STATES PATENT AND TRADEMARK OFFICE

UNITED STATES DEPARTMENT OF COMMERCE
United States Patent and Trademark Office
Address: COMMISSIONER FOR PATENTS
P.O. Box 1450
Alexandria, Virginia 22313-1450
www.uspto.gov

APPLICATION NUMBER	FILING or 371(c) DATE	GRP ART UNIT	FIL FEE REC'D	ATTY.DOCKET.NO	TOT CLAIMS	IND CLAIMS
10/683,821	10/10/2003	3691	2784	602097-009	154	25

CONFIRMATION NO. 2990

CORRECTED FILING RECEIPT

61834
Ostrow Kaufman & Frankl LLP
Susan Formicola
The Chrysler Building
405 Lexington Avenue, 62nd Floor
NEW YORK, NY 10174

OC000000035440425

Date Mailed: 04/10/2009

Receipt is acknowledged of this non-provisional patent application. The application will be taken up for examination in due course. Applicant will be notified as to the results of the examination. Any correspondence concerning the application must include the following identification information: the U.S. APPLICATION NUMBER, FILING DATE, NAME OF APPLICANT, and TITLE OF INVENTION. Fees transmitted by check or draft are subject to collection. Please verify the accuracy of the data presented on this receipt. **If an error is noted on this Filing Receipt, please submit a written request for a Filing Receipt Correction. Please provide a copy of this Filing Receipt with the changes noted thereon. If you received a "Notice to File Missing Parts" for this application, please submit any corrections to this Filing Receipt with your reply to the Notice. When the USPTO processes the reply to the Notice, the USPTO will generate another Filing Receipt incorporating the requested corrections**

Applicant(s)

James D. Burchetta, New York, NY;
Charles S. Brofman, Waccabuc, NY;

Power of Attorney: The patent practitioners associated with Customer Number 61834

Domestic Priority data as claimed by applicant

This application is a CIP of 09/370,394 08/06/1999 PAT 6,954,741
which is a CIP of 09/130,154 08/06/1998 PAT 6,330,551

Foreign Applications

If Required, Foreign Filing License Granted: 01/12/2004

The country code and number of your priority application, to be used for filing abroad under the Paris Convention, is **US 10/683,821**

Projected Publication Date: Not Applicable

Non-Publication Request: No

Early Publication Request: No
**** SMALL ENTITY ****

Title

Computerized bargaining system and method

Preliminary Class

705

PROTECTING YOUR INVENTION OUTSIDE THE UNITED STATES

Since the rights granted by a U.S. patent extend only throughout the territory of the United States and have no effect in a foreign country, an inventor who wishes patent protection in another country must apply for a patent in a specific country or in regional patent offices. Applicants may wish to consider the filing of an international application under the Patent Cooperation Treaty (PCT). An international (PCT) application generally has the same effect as a regular national patent application in each PCT-member country. The PCT process **simplifies** the filing of patent applications on the same invention in member countries, but **does not result** in a grant of "an international patent" and does not eliminate the need of applicants to file additional documents and fees in countries where patent protection is desired.

Almost every country has its own patent law, and a person desiring a patent in a particular country must make an application for patent in that country in accordance with its particular laws. Since the laws of many countries differ in various respects from the patent law of the United States, applicants are advised to seek guidance from specific foreign countries to ensure that patent rights are not lost prematurely.

Applicants also are advised that in the case of inventions made in the United States, the Director of the USPTO must issue a license before applicants can apply for a patent in a foreign country. The filing of a U.S. patent application serves as a request for a foreign filing license. The application's filing receipt contains further information and guidance as to the status of applicant's license for foreign filing.

Applicants may wish to consult the USPTO booklet, "General Information Concerning Patents" (specifically, the section entitled "Treaties and Foreign Patents") for more information on timeframes and deadlines for filing foreign patent applications. The guide is available either by contacting the USPTO Contact Center at 800-786-9199, or it can be viewed on the USPTO website at http://www.uspto.gov/web/offices/pac/doc/general/index.html.

For information on preventing theft of your intellectual property (patents, trademarks and copyrights), you may wish to consult the U.S. Government website, http://www.stopfakes.gov. Part of a Department of Commerce initiative, this website includes self-help "toolkits" giving innovators guidance on how to protect intellectual property in specific countries such as China, Korea and Mexico. For questions regarding patent enforcement issues, applicants may call the U.S. Government hotline at 1-866-999-HALT (1-866-999-4158).

LICENSE FOR FOREIGN FILING UNDER

Title 35, United States Code, Section 184

Title 37, Code of Federal Regulations, 5.11 & 5.15

GRANTED

The applicant has been granted a license under 35 U.S.C. 184, if the phrase "IF REQUIRED, FOREIGN FILING LICENSE GRANTED" followed by a date appears on this form. Such licenses are issued in all applications where the conditions for issuance of a license have been met, regardless of whether or not a license may be required as

set forth in 37 CFR 5.15. The scope and limitations of this license are set forth in 37 CFR 5.15(a) unless an earlier license has been issued under 37 CFR 5.15(b). The license is subject to revocation upon written notification. The date indicated is the effective date of the license, unless an earlier license of similar scope has been granted under 37 CFR 5.13 or 5.14.

This license is to be retained by the licensee and may be used at any time on or after the effective date thereof unless it is revoked. This license is automatically transferred to any related applications(s) filed under 37 CFR 1.53(d). This license is not retroactive.

The grant of a license does not in any way lessen the responsibility of a licensee for the security of the subject matter as imposed by any Government contract or the provisions of existing laws relating to espionage and the national security or the export of technical data. Licensees should apprise themselves of current regulations especially with respect to certain countries, of other agencies, particularly the Office of Defense Trade Controls, Department of State (with respect to Arms, Munitions and Implements of War (22 CFR 121-128)); the Bureau of Industry and Security, Department of Commerce (15 CFR parts 730-774); the Office of Foreign AssetsControl, Department of Treasury (31 CFR Parts 500+) and the Department of Energy.

NOT GRANTED

No license under 35 U.S.C. 184 has been granted at this time, if the phrase "IF REQUIRED, FOREIGN FILING LICENSE GRANTED" DOES NOT appear on this form. Applicant may still petition for a license under 37 CFR 5.12, if a license is desired before the expiration of 6 months from the filing date of the application. If 6 months has lapsed from the filing date of this application and the licensee has not received any indication of a secrecy order under 35 U.S.C. 181, the licensee may foreign file the application pursuant to 37 CFR 5.15(b).

UNITED STATES PATENT AND TRADEMARK OFFICE

COMMISSIONER FOR PATENTS
UNITED STATES PATENT AND TRADEMARK OFFICE
P.O. BOX 1450
ALEXANDRIA, VA 22313-1450
www.uspto.gov

E I DU PONT DE NEMOURS AND COMPANY
LEGAL PATENT RECORDS CENTER
BARLEY MILL PLAZA 25/1128
4417 LANCASTER PIKE
WILMINGTON, DE 19805

COPY MAILED

SEP 20 2005

OFFICE OF PETITIONS

In re Application of :
Yu Gang, et al. :
Application No. 10/683,829 : ON PETITION
Filed: October 10, 2003 :
Attorney Docket No. UC0343 US CIP :

This is a decision in response to the petition under 37 CFR 1.137(b), filed July 27, 2005, to revive the above-identified application.

The petition is **GRANTED**.

The application became abandoned for failure to timely reply to the final Office action mailed January 11, 2005. The application is being revived for consideration of a submission under 37 CFR 1.114 (request for continued examination).

It is noted that petitioner submitted an extension of time with the present petition. Extensions of time under 37 CFR 1.136 are available only if asked for prior to or with the response. In no case, however, may an applicant respond later than the maximum time period set by statute. Accordingly, if the question of abandonment arises when the provisions of 37 CFR 1.136 can no longer be used, then the application is abandoned when the unextended time for response has expired. Since, no extension of time fees are due on a petition for revival, the extension fees submitted with the present petition are being credited to counsel's deposit account.

Telephone inquiries concerning this decision should be directed to the undersigned at (571) 272-3204.

The application file is being forwarded to Technology Center AU 2891, for further processing of the request for continued examination under 37 CFR 1.114.

Sherry D. Brinkley
Petitions Examiner
Office of Petitions
Office of the Deputy Commissioner
for Patent Examination Policy

UNITED STATES PATENT AND TRADEMARK OFFICE

COMMISSIONER FOR PATENTS
UNITED STATES PATENT AND TRADEMARK OFFICE
P.O. BOX 1450
ALEXANDRIA, VA 22313-1450
www.uspto.gov

Robert M. Asher
BROMBERG & SUNSTEIN LLP
125 Summer street
Boston, MA 02110-1618

MAIL

SEP 0 9 2005

DIRECTOR OFFICE
TECHNOLOGY CENTER 2100

In re Application of:
J. Ian PERCIVAL
Appl. No.: 10/683,853
Filed: October 10, 2003
For: A METHOD AND SYSTEM FOR COHERENTLY CACHING I/O DEVICES ACROSS A NETWORK

DECISION ON PETITION
UNDER 37 CFR § 1.59

This is a decision on the petition under 37 CFR § 1.59(b), filed August 18, 2005 to expunge the Information filed on the same date.

The petition is **DIMISSED**. The petition was not accompanied by the required fee under 37 C.F.R. § 1.17(h). Further, petitioner failed to clearly identify the document which petitioner requests to expunge; for example, refer to the author and title of the document.

It is noted that the examiner has not determined whether or not the information submitted on August 18, 2005 is considered to be "material", with "materiality" being defined as any information which the examiner considers as being important to a determination of patentability of the claims.

Any inquiry concerning this decision should be directed to the undersigned whose telephone number is (571) 272-3613.

Vincent N. Trans
Special Program Examiner
Technology Center 2100
Computer Architecture, Software, and
Information Security

UNITED STATES PATENT AND TRADEMARK OFFICE

COMMISSIONER FOR PATENTS
UNITED STATES PATENT AND TRADEMARK OFFICE
P.O. BOX 1450
ALEXANDRIA, VA 22313-1450
www.uspto.gov

Robert M. ASHER
BROMBERG & SUNSTEIN LLP
125 Summer street
Boston, MA 02110-1618

MAILED

DEC 16 2005

TECHNOLOGY CENTER 2100

In re Application of:
J. Ian PERCIVAL
Appl. No.: 10/683,853
Filed: October 10, 2003
For: A METHOD AND SYSTEM FOR COHERENTLY CACHING I/O DEVICES ACROSS A NETWORK

DECISION ON PETITION
UNDER 37 CFR § 1.59

This is a decision on the petition under 37 CFR § 1.59(b), filed on August 18, 2005 to expunge the Information Disclosure Statement (IDS) submitted on August 18, 2005.

The petition is **GRANTED**.

Petitioner requests that the IDS submitted on August 18, 2005 be expunged from the record. Petitioner states that the IDS submitted on August 18, 2005 is subject to a protective order and the information has not been otherwise made public. The petition fee set forth in 37 CFR § 1.17(g) has been paid.

Applicant is required to retain the expunged material(s) for the life of any patent, which issues on the above-identified application.

The expunged material is returned herewith.

Any inquiry concerning this decision should be directed to the undersigned whose telephone number is (571) 272-3613.

Vincent N. Trans
Special Program Examiner
Technology Center 2100
Computer Architecture, Software, and
Information Security

UNITED STATES PATENT AND TRADEMARK OFFICE

COMMISSIONER FOR PATENTS
UNITED STATES PATENT AND TRADEMARK OFFICE
P.O. BOX 1450
ALEXANDRIA, VA 22313-1450
www.uspto.gov

COPY MAILED

JAN 0 9 2004

OFFICE OF PETITIONS

MICHAEL E. TAKEN
ANDRUS SCEALES STARKE & SAWALL LLP
100 EAST WISCONSIN AVENUE, SUITE 1100
MILWAUKEE, WI 53202

In re Application of :
Noel R. Johnson et al :
Application No. 10/683,854 : NOTICE
Filed: October 10, 2003 :
Attorney Docket No. 4767-00046

This is a notice regarding your request for acceptance of a fee deficiency submission under 37 CFR 1.28. On September 1, 1998, the Court of Appeals for the Federal Circuit held that 37 CFR 1.28(c) is the sole provision governing the time for correction of the erroneous payment of the issue fee as a small entity. **See DH Technology v. Synergystex International, Inc. 154 F.3d 1333, 47 USPQ2d 1865 (Fed. Cir. Sept. 1, 1998).**

The Office no longer investigates or rejects original or reissue applications under 37 CFR 1.56. **1098 Off. Gaz. Pat. Office 502 (January 3, 1989)**. Therefore, nothing in this Notice is intended to imply that an investigation was done.

Your fee deficiency submission under 37 CFR 1.28 is hereby **ACCEPTED**.

Inquiries related to this communication should be directed to the Office of Petitions Staff at (703) 305-9285.

Further correspondence with respect to this matter should be addressed as follows:

By mail: Mail Stop PETITION
Commissioner for Patents
Post Office Box 1450
Alexandria, VA 22313-1450

Effective December 1, 2003, the Office of Petitions can no longer receive hand-carried correspondence, or facsimile transmissions of correspondence. The centralized location for hand-carried correspondence is the Customer Window located at:

2011 South Clark Place
Crystal Plaza Two, Lobby
Arlington, VA 22202

The centralized facsimile number is **(703) 872-9306.**

This file is being forwarded to Technology Center AU 3643.

Irvin Dingle
Petitions Examiner
Office of Petitions
Office of the Deputy Commissioner
for Patent Examination Policy

UNITED STATES PATENT AND TRADEMARK OFFICE

COMMISSIONER FOR PATENTS
UNITED STATES PATENT AND TRADEMARK OFFICE
P.O. BOX 1450
ALEXANDRIA, VA 22313-1450
www.uspto.gov

MAILED

APR 05 2010

OFFICE OF PETITIONS

FOLEY & LARDNER LLP
975 PAGE MILL ROAD
PALO ALTO CA 94304

In re Patent No. 7,507,229	:	DECISION ON REQUEST FOR
Hewitt et al.	:	RECONSIDERATION OF
Issue Date: March 24, 2009	:	PATENT TERM ADJUSTMENT AND
Application No. 10/683,877	:	NOTICE OF INTENT TO ISSUE
Filed: October 10, 2003	:	CERTIFICATE OF CORRECTION
Atty Docket No. 355492-2950	:	

This is a decision on the petition filed on May 7, 2009, which is being treated as a petition under 37 CFR 1.705(d) requesting that the patent term adjustment indicated on the above-identified patent be corrected to indicate that the term of the above-identified patent is extended or adjusted by six hundred sixty-nine (669) days.

The petition to correct the patent term adjustment indicated on the above-identified patent is **GRANTED to the extent indicated herein.** The term of the above-identified patent is extended or adjusted by **four hundred eighty-seven (487) days.**

As the period from the filing date of the request for continued examination (RCE) to the issue date of the patent is not included in the "B" delay period, the over three year period begins on October 11, 2006, and ends on November 27, 2007, the day before the RCE was filed, and is 413 (not 414) days. See 35 U.S.C. 154(b)(1)(B)(i).

Further, the Office notes that patentee failed to account for the filing of the notice of appeal on May 31, 2007. The Office reminds patentee that the period consumed by appellate review, whether successful or not, is excluded from the calculation of B

delay. See 35 U.S.C. 154(b)(1)(B)(ii). In this instance, the period consumed by appellate review is 181 days, beginning on the date on which the notice of appeal to the Board of Patent Appeals and Interferences was filed, May 31, 2007, and ending on the day before the filing of the RCE, November 27, 2007. Thus, the B delay is 232 days (413 - 181).

Accordingly, the patent term adjustment is 487 days (510 days of A delay + 232 days of B delay - 255 days of applicant delay).

The Office will *sua sponte* issue a certificate of correction. Pursuant to 37 CFR 1.322, the Office will not issue a certificate of correction without first providing assignee or patentee an opportunity to be heard. Accordingly, patentee is given **one (1) month or thirty (30) days**, whichever is longer, from the mail date of this decision to respond. No extensions of time will be granted under 37 CFR 1.136.

The Office acknowledges the submission of the $200.00 fee set forth in 37 CFR 1.18(e). No additional fee is required.

This matter is being referred to the Certificates of Correction Branch for issuance of a certificate of correction. The Office will issue a certificate of correction indicating that the term of the above-identified patent is extended or adjusted by **four hundred eighty-seven (487) days.**

Telephone inquiries specific to this matter should be directed to the undersigned at (571) 272-3211.

Christina Tartera Donnell

Christina Tartera Donnell
Senior Petitions Attorney
Office of Petitions

Enclosure: Copy of DRAFT Certificate of Correction

UNITED STATES PATENT AND TRADEMARK OFFICE

CERTIFICATE OF CORRECTION

PATENT: 7,507,229 B2

DATED: Mar. 24, 2009 **DRAFT**

INVENTOR(S): Hewitt et al.

It is certified that error appears in the above-identified patent and that said Letters Patent is hereby corrected as shown below:

On the cover page,

[*] Notice: Subject to any disclaimer, the term of this patent is extended or adjusted under 35 USC 154(b) by 255 days

Delete the phrase "by 255 days" and insert – by 487 days--

UNITED STATES PATENT AND TRADEMARK OFFICE

Commissioner for Patents
United States Patent and Trademark Office
P.O. Box 1450
Alexandria, VA 22313-1450
www.uspto.gov
DIW Mar-08

LAHIVE & COCKFIELD, LLP
ONE POST OFFICE SQUARE
BOSTON MA 02109-2127

COPY MAILED

MAR 04 2008

In re Application of	:	
Lu et al.	:	DECISION ON PETITION TO
Application Number: 10/683880	:	WITHDRAW HOLDING OF
Filing Date: 10/09/2003	:	ABANDONMENT
Attorney Docket Number: BIZ-045CPCN	:	

This is a decision on the "PETITION FOR WITHDRAWAL OF HOLDING OF ABANDONMENT UNDER 37 C.F.R. 1.181(a)," filed on January 28, 2008.

A Notice of Abandonment was mailed on January 3, 2008, stating that the application was abandoned for failure to timely file a proper reply to the final Office action mailed on June 20, 2007.

Petitioners aver that the Office issued the Notice of Abandonment in error because applicant filed a timely and proper reply to the final Office action of June 20, 2007. Specifically, petitioners assert that they timely filed a Notice of Appeal and a three (3) month extension of time on December 20, 2007.

A review of the record reveals that a Notice of Appeal and three (3) month extension of time filed on December 20, 2007, are located therein.

Accordingly, petitioners have established that they submitted a timely reply to the final Office action in the form of a Notice of Appeal and a three (3)-month extension of time on December 20, 2007. **Therefore, the Office reminds applicant that the two (2)-month extendable period to file an appeal brief in compliance with 37 CFR 41.37, accompanied by the fee required by law, began to run on December 20, 2007, the date of filing the Notice of Appeal.** The Office notes that "37 CFR 41.37(a) does not permit the brief to be filed within the time allowed for reply to the action from which the appeal was taken even if such time is later." *MPEP 1205*. "Once appellant timely files a notice of appeal in compliance with 37 CFR 41.31, the time period for reply set forth in the last Office action is tolled and is no longer relevant for the time period for filing an appeal brief." *Id.*

Therefore, applicant is required to submit an appeal brief on or before July 20, 2008, accompanied by a request for an extension of time for response within the fifth month and fee to avoid abandonment of this application. In other words, applicant, himself, started the running of the two-month extendable period to file an appeal brief based upon the date applicant originally submitted the Notice of Appeal with the USPTO.

The petition is **granted** to the extent indicate above.

The holding of abandonment is withdrawn and the application is restored to pending status.

This matter is being referred to Technology Center Art Unit 1643 to await the filing of an appeal brief within the period noted above.

Telephone inquiries concerning this matter may be directed to the undersigned at (571) 272-3231.

DWood

Douglas I. Wood
Senior Petitions Attorney
Office of Petitions

UNITED STATES PATENT AND TRADEMARK OFFICE

COMMISSIONER FOR PATENTS
UNITED STATES PATENT AND TRADEMARK OFFICE
P.O. BOX 1450
ALEXANDRIA, VA 22313-1450
www.uspto.gov

CHOATE, HALL & STEWART / CITRIX SYSTEMS, INC.
TWO INTERNATIONAL PLACE
BOSTON MA 02110

COPY MAILED

SEP 23 2008

OFFICE OF PETITIONS

In re Application of :
Panasyuk et al. :
Application Number: 10/683881 :
Filing Date: 10/10/2003 :
Attorney Docket Number: :
2006579-0432 (CTX-084) :

ON PETITION

This is a decision on the petition requesting withdrawal of the holding of abandonment, filed on July 9, 2008.

The petition is **GRANTED**.

The application was held abandoned for failure to timely a reply to the non-final Office action mailed on December 11, 2007, which set a three (3) month statutory period for reply. A Notice of Abandonment was mailed on June 18, 2008. The subject petition was filed on July 9, 2008.

Petitioners assert that a timely response, including an amendment and a one (1) month extension of time, was filed by facsimile on April 11, 2008.

In support, petitioners have provided a copy of the amendment and extension of time asserted to have been timely filed. Additionally, a copy of the sending unit's transmission report and the USPTO Auto-Reply Facsimile Transmission report, showing that 14 pages, including the first page of the reply, which contains a certificate of transmission signed by Adele E. Kalogeris, have been filed.

37 CFR 1.8(b) states:

> In the event that correspondence is considered timely filed by being mailed or transmitted in accordance with paragraph (a) of this section, but not received in the U.S. Patent and Trademark Office after a reasonable amount of time has elapsed from the time of mailing or transmitting of the correspondence, or after the

> application is held to be abandoned, or after the proceeding is dismissed, terminated, or decided with prejudice, the correspondence will be considered timely if the party who forwarded such correspondence:
> (1) Informs the Office of the previous mailing or transmission of the correspondence promptly after becoming aware that the Office has no evidence of receipt of the correspondence;
> (2) Supplies an additional copy of the previously mailed or transmitted correspondence and certificate; and
> (3) Includes a statement which attests on a personal knowledge basis or to the satisfaction of the Director to the previous timely mailing or transmission. If the correspondence was sent by facsimile transmission, a copy of the sending unit's report confirming transmission may be used to support this statement.

As petitioners have provided convincing evidence that a response to the non-final Office action mailed on December 11, 2007, was transmitted to the USPTO on April 11, 2008, the showing of record is that a response was timely filed, and there is no abandonment in fact. Any inconvenience caused to applicant is regretted.

The holding of abandonment is withdrawn, and the notice of abandonment is vacated.

The one (1) month extension of time fee will be charged to counsel's deposit account, as authorized in the petition for extension of time.

The application is referred to Technology Center Art Unit 2154 for further processing.

Telephone inquiries concerning this matter may be directed to the undersigned at (571)272-3231.

D Wood

Douglas I. Wood
Senior Petitions Attorney
Office of Petitions

UNITED STATES PATENT AND TRADEMARK OFFICE

Commissioner for Patents
United States Patent and Trademark Office
P.O. Box 1450
Alexandria, VA 22313-1450
www.uspto.gov

GATES & COOPER LLP
HOWARD HUGHES CENTER
6701 CENTER DRIVE WEST, SUITE 1050
LOS ANGELES CA 90045

MAILED

APR 12 2010

OFFICE OF PETITIONS

In re Patent No. 7,077,979 :
Issued: July 18, 2006 :
Application No. 10/683,899 : NOTICE
Filed: October 10, 2003 :
Attorney Docket No. G&C 30794.349-US-01 :

This is a notice regarding your request for acceptance of a fee deficiency submission under 37 CFR 1.28.

The Office no longer investigates or rejects original or reissue patent under 37 CFR 1.56. **1098 Off. Gaz. Pat. Office 502 (January 3, 1989)**. Therefore, nothing in this Notice is intended to imply that an investigation was done.

Your fee deficiency submission under 37 CFR 1.28 is hereby **ACCEPTED**.

This patent is no longer entitled to small entity status. Accordingly, all future fees paid in this patent must be paid at the large entity rate.

Inquiries related to this communication should be directed to the undersigned at (571) 272-3206.

Liana Walsh
Petitions Examiner
Office of Petitions

UNITED STATES PATENT AND TRADEMARK OFFICE

Commissioner for Patents
United States Patent and Trademark Office
P.O. Box 1450
Alexandria, VA 22313-1450
www.uspto.gov

HAIGHT BROWN & BONESTEEL
ATTN: DENNIS S. MORRIS
SUITE 800
6080 CENTER DRIVE
LOS ANGELES, CA 90045

COPY MAILED

MAY 17 2006

OFFICE OF PETITIONS

In re Application of	:	
Christina Corral	:	
Application No. 10/683,912	:	DECISION ON PETITION
Filed: October 10, 2003	:	TO WITHDRAW
Attorney Docket No. CO55-001	:	FROM RECORD
	:	

This is a decision on the Request to Withdraw as attorney or agent of record under 37 C.F.R. § 1.36(b), filed January 13, 2006.

The request is **NOT APPROVED** as moot.

A review of the file record indicates that the previously appointed power of attorney has been revoked by the applicant. Accordingly, the request to withdraw under 37 C.F.R. § 1.36(b) is moot.

All future communications from the Office will continue to be directed to the below-listed address until otherwise notified by applicant.

This application is being referred to Technology Center AU 3671 to await a reply to the final Office action mailed December 5, 2005.

Telephone inquires concerning this decision should be directed to Wan Laymon at 571-272-3220.

Amelia Au
Petitions Examiner
Office of Petitions

cc: LINER YANKEVITZ SUNSHINE & REGENSTRIEF
ATTN: STEFAN J. KIRCHANSKI
1100 GLENDON AVENUE, 14TH FLOOR
LOS ANGELES, CA 90024-3503

UNITED STATES PATENT AND TRADEMARK OFFICE

Commissioner for Patents
United States Patent and Trademark Office
P.O. Box 1450
Alexandria, VA 22313-1450
www.uspto.gov

KENYON & KENYON
SUITE 700
1500 K. STREET, N.W.
WASHINGTON, DC 20005

COPY MAILED

NOV 0 6 2007

OFFICE OF PETITIONS

In re Application of
NiraJ Mahadev, et al.
Application No. 10/683,927
Filed: October 10, 2003
Attorney Docket No. 2855/98

ON PETITION

This is a decision on the petition, filed May 29, 2007, to revive the above-identified application under 37 CFR 1.137(b).

The petition is **GRANTED**.

This application became abandoned on February 17, 2007 for failure to timely file a reply within the meaning of 37 CFR 1.113 to the final Office action of November 16, 2006. On May 29, 2007, the present petition was filed. A Notice of Abandonment was subsequently, mailed on May 31, 2007. Thereafter on June 18, 2007, a Notice of Appeal (and fee) was filled, including a one-month extension of time, followed by an Appeal Brief, the requisite fee and a one-month extension of time on September 18, 2007.

The proposed reply required for consideration of a petition to revive must be a Notice of Appeal (and appeal fee required by 37 CFR 41.20(b)(2)), an amendment that *prima facie* places the application in condition for allowance, a Request for Continued Examination (RCE) and submission (37 CFR 1.114), or the filing of a continuing application under 37 CFR 1.53(b). See MPEP 711.03(c)(II)(A)(2).

The petition satisfies the requirements of 37 CFR 1.137(b) in that petitioner has supplied (1) the reply in the form of a Notice of Appeal and fee of $500; (2) the petition fee of $1,500; and (3) an adequate statement of unintentional delay1.

1 37 CFR 1.137(b)(3) requires a statement that the entire delay in filing the required reply from the due date for the reply until the filing of a grantable petition pursuant to 37 CFR 1.137(b) was unintentional. Although the statement contained in the petition varies from the language required by 37 CFR 1.137(b)(3), the statement will be construed as the statement required by 37 CFR 1.137(b)(3). Petitioner must notify the Office if this is **not** a correct interpretation of the statement contained in the instant petition.

Extensions of time under 37 CFR 1.136 must be filed prior to the expiration of the maximum extendable period for reply. *See* In re Application of S., 8 USPQ2d 1630, 1631 (Comm'r Pats. 1988). Since the $120 extension of time fees submitted on June 18, 2007 and September 18, 2007 were subsequent to the maximum extendable period for reply, these fees are unnecessary and will be credited to petitioner's deposit account.

The application file does not indicate a change of address has been filed in this case, although the address given on the petition differs from the address of record. If appropriate, a change of address should be filed in this case in accordance with MPEP 601.03. A courtesy copy of this decision is being mailed to the address noted on the petition. However, until otherwise instructed, all future correspondence regarding this application will be mailed solely to the address of record.

The application is being referred to Technology Center AU 1763 for appropriate action by the Examiner in the normal course of business.

Telephone inquiries concerning this decision may be directed to the undersigned at (571) 272-3204. Inquiries relating to the prosecution of the application should be referred to the Technology Center.

Sherry D. Brinkley
Petitions Examiner
Office of Petitions

cc: KENYON & KENYON LLP
333 WEST SAN CARLOS STREET
SUITE 600
SAN JOSE, CA 95110

UNITED STATES PATENT AND TRADEMARK OFFICE

Commissioner for Patents
United States Patent and Trademark Office
P.O. Box 1450
Alexandria, VA 22313-1450
www.uspto.gov

Paper No. 062705

DECHERT LLP
P.O. BOX 10004
PALO ALTO CA 94303

JUL 7 2005

In re Application of:	:	
Robert Hunter	:	
Serial No.: 10/683,928	:	DECISION ON REQUEST TO WITHDRAW
Filed: October 10, 2003	:	FROM RECORD
Attorney Docket No.:	:	

This is a decision on the request to withdraw as attorney/agent of record under 37 C.F.R. § 1.36, filed May 19, 2005 and May 25, 2005.

A grantable request to withdraw as attorney of record must be signed by every attorney seeking to withdraw or contain a clear indication that one attorney is signing on behalf of others. A request to withdraw will not be approved unless at least thirty (30) days would remain between the date of approval and the later of the expiration date of a time to file a response or the expiration date of the maximum time period, which can be extended under 37 C.F.R. § 1.136(a).

The request meets all the above stated requirements. The request was signed by Justin Boyce, on behalf of himself and all the attorneys/agents of record. There is no outstanding Office action at this time.

The request is **APPROVED**.

There are no attorneys/agents of record at this time.

All future communications from the Office will be directed Robert Hunter, at the below address, until otherwise notified by applicant.

Inquiries related to this decision should be directed to Clayton E. LaBalle at (571) 272-1594.

Clayton E. LaBalle, Special Programs Examiner
Technology Center 2800
Semiconductors, Electrical and Optical
Systems and Components

cc: Robert Hunter
TRENDPOINT SYSTEMS, INC.
111 Deerwood Road, Suite 200
San Ramon, CA 94583

UNITED STATES PATENT AND TRADEMARK OFFICE

Commissioner for Patents
United States Patent and Trademark Office
P.O. Box 1450
Alexandria, VA 22313-1450
www.uspto.gov

HICKMAN PALERMO TRUONG & BECKER, LLP
2055 GATEWAY PLACE
SUITE 550
SANJOSE CA 95110

COPY MAILED

JUN 02 2008

OFFICE OF PETITIONS

In re Application of
Madhusudhana et al
Application No. 10/683,954
Filed: October 9, 2003
Attorney Docket No. 50325-0798

DECISION ON PETITION

This is a decision on the petition under 37 CFR 1.314, filed May 23, 2008, to defer issuance of the patent.

The petition is **GRANTED**.

Issuance will be deferred for a period of one month from the date of this decision. At the end of this period, the application will be referred to the Office of Data Management to be processed into a patent.

If an additional deferral period is required, another petition and fee should be promptly submitted. The petition must include a showing of extraordinary circumstances. See MPEP 1306.01.

Further correspondence with respect to this matter should be addressed as follows:

By mail: Mail Stop PETITION
Commissioner for Patents
Post Office Box 1450
Alexandria, VA 22313-1450

By hand: Customer Service Window
Mail Stop Petitions
Randolph Building
401 Dulany Street
Alexandria, VA 22314

By Fax: (571) 273-8300
ATTN: Office of Petitions

Telephone inquiries should be directed to the undersigned at (571) 272-3208.

Karen Creasy
Petitions Examiner
Office of Petitions

UNITED STATES PATENT AND TRADEMARK OFFICE

Commissioner for Patents
United States Patent and Trademark Office
P.O. Box 1450
Alexandria, VA 22313-1450
www.uspto.gov

TEXAS INSTRUMENTS INCORPORATED
P O BOX 655474, M/S 3999
DALLAS TX 75265

COPY MAILED
JAN 22 2009

In re Application of :
Jaroslav HYNECEK :
Application No. 10/683,966 : DECISION ON PETITION
Filed: October 10, 2003 :
Attorney Docket No. :

This is a decision on the petition under the unintentional provisions of 37 CFR 1.137(b), filed October 24, 2008, to revive the above-identified application.

The petition is **GRANTED**.

This application became abandoned for failure to timely file a reply within the meaning of 37 CFR 1.113 to the final Office action of October 22, 2007. The proposed reply required for consideration of a petition to revive must be a Notice of Appeal (and appeal fee required by 37 CFR 41.20(b)(2)), an amendment that *prima facie* places the application in condition for allowance, a Request for Continued Examination (RCE) and submission (37 CFR 1.114), or the filing of a continuing application under 37 CFR 1.53(b). See MPEP 711.03(c)(III)(A)(2). No extensions of time pursuant to the provisions of 37 CFR 1.136(a) were obtained. Accordingly, the date of abandonment of this application is April 23, 2008.

The petition satisfies the requirements of 37 CFR 1.137(b) in that petitioner has supplied (1) the reply in the form of a Notice of Appeal; (2) the petition fee of $1620; and (3) a proper statement of unintentional delay.

Telephone inquiries concerning this decision should be directed to Tredelle Jackson at (571) 272-2783.

This application is being referred to Technology Center AU 2622 to await the filing of an appeal brief or for such other appropriate reply as may be submitted to continue prosecution of the application.

Ramesh Krishnamurthy
Petitions Examiner
Office of Petitions

UNITED STATES PATENT AND TRADEMARK OFFICE

Commissioner for Patents
United States Patent and Trademark Office
P.O. Box 1450
Alexandria, VA 22313-1450
www.uspto.gov

BROUSE MCDOWELL
388 SOUTH MAIN STREET
SUITE 500
AKRON, OH 44311-4407

COPY MAILED

OCT 0 3 2005

OFFICE OF PETITIONS

In re Application of :
Hongfen Li :
Application No. 10/683,984 : DECISION ON PETITION
Filed: October 2, 2003 : UNDER 37 CFR 1.78(a)(3)
Attorney Docket No. 31427.24034 :

This is a decision on the petition under 37 CFR 1.78(a)(3), filed January 31, 2005, to accept an unintentionally delayed claim under 35 U.S.C. §§ 120 and 365(c) for the benefit of a prior-filed International Application No. PCT/CN01/01522, filed November 1, 2001, as set forth in the instant petition.

The petition is **DISMISSED.**

A petition for acceptance of a claim for late priority under 37 CFR 1.78(a)(3) is only applicable to those applications filed on or after November 29, 2000. Further, the petition is appropriate only after the expiration of the period specified in 37 CFR 1.78(a)(2)(ii). In addition, the petition under 37 CFR 1.78(a)(3) must be accompanied by:

(1) the reference required by 35 U.S.C. § 120 and 37 CFR 1.78(a)(2)(i) of the prior-filed application, unless previously submitted;
(2) the surcharge set forth in § 1.17(t); and
(3) a statement that the entire delay between the date the claim was due under 37 CFR 1.78(a)(2)(ii) and the date the claim was filed was unintentional. The commissioner may require additional information where there is a question whether the delay was unintentional.

The petition does not comply with item **(1)**.

37 CFR 1.78(a)(2)(i) requires that any nonprovisional application claiming the benefit of one or more prior-filed copending nonprovisional applications must contain or be amended to contain a reference to each such prior-filed application, identifying it by application number (consisting of the series code and serial number) and indicating the relationship of the applications. The relationship between the applications is whether the subject application is a continuation, divisional, or continuation-in-part of a prior-filed nonprovisional application. An example of a proper benefit claim is: "This application is a continuation of Application No. 10/---, filed---." A benefit claim that merely states: "This application claims the benefit of Application No. 10/---, filed---," does not comply with 37 CFR 1.72(a)(2)(i) since

the proper relationship, which includes the type of continuing application, is not stated. Also, the status of each nonprovisional parent application (if it is patented or abandoned) should also be indicated, following the filing date of the parent nonprovisional application. See MPEP Section 201.11, Rev. 2, May 2004, Reference to Prior Application. The amendment filed March 15, 2005 fails to state the relationship of PCT Application No. PCT/CN01/01522, filed November 1, 2001, to this application.

Since the claim for priority is physically part of the petition and does not comply with 37 CFR 1.121, 1.52, or 1.4(c), it is not acceptable. Note that 37 CFR 1.121 states that amendments are made by filing a paper, in compliance with § 1.52, directing that specified amendments be made. The pertinent section of 37 CFR 1.52 states that the claim (in this case, the claim for priority), must commence on a separate physical sheet. 37 CFR 1.4(c) states that each distinct subject must be contained in a separate paper since different matters may be considered by different branches of the United States Patent and Trademark Office.

In view of the above, the priority claim to the first line of the specification, which is physically embedded in the instant petition, is not acceptable. Accordingly, a substitute amendment in compliance with the aforementioned rules, along with a renewed petition under 37 CFR 1.78(a)(3), must be submitted. Also, the substitute amendment or Application Data Sheet must comply with 37 CFR 1.121 and 37 CFR 1.76(b)(5), and state the relationship of the prior-filed application to this application.

Further correspondence with respect to this matter should be addressed as follows:

By mail:	Mail Stop PETITIONS Commissioner for Patents Post Office Box 1450 Alexandria, VA 22313-1450
By hand:	Customer Service Window Mail Stop Petitions Randolph Building 401 Dulany Street Alexandria, VA 22314
By fax:	(571) 273-8300 ATTN: Office of Petitions

Any questions concerning this matter may be directed to Andrea Smith at (571) 272-3226.

Frances Hicks
Petitions Examiner
Office of Petitions

UNITED STATES PATENT AND TRADEMARK OFFICE

COMMISSIONER FOR PATENTS
UNITED STATES PATENT AND TRADEMARK OFFICE
P.O. BOX 1450
ALEXANDRIA, VA 22313-1450
www.uspto.gov

BROUSE MCDOWELL, LPA
388 SOUTH MAIN STREET
SUITE 500
AKRON, OH 44311

COPY MAILED

MAY 0 9 2006

OFFICE OF PETITIONS

In re Application of :
Hongfen Li :
Application No. 10/683,984 : DECISION ON PETITION
Filed: October 2, 2003 : UNDER 37 CFR 1.78(a)(3)
Attorney Docket No. 31427.24034 :

This is a decision on the renewed petition under 37 CFR 1.78(a)(3), filed October 19, 2005, to accept an unintentionally delayed claim under 35 U.S.C. §120 for the benefit of the prior-filed nonprovisional application set forth in the concurrently filed amendment.

The petition is **DISMISSED.**

A petition for acceptance of a claim for late priority under 37 CFR 1.78(a)(3) is only applicable to those applications filed on or after November 29, 2000. Further, the petition is appropriate only after the expiration of the period specified in 37 CFR 1.78(a)(2)(ii). In addition, the petition under 37 CFR 1.78(a)(3) must be accompanied by:

(1) the reference required by 35 U.S.C. § 120 and 37 CFR 1.78(a)(2)(i) of the prior-filed application, unless previously submitted;
(2) the surcharge set forth in § 1.17(t); and
(3) a statement that the entire delay between the date the claim was due under 37 CFR 1.78(a)(2)(ii) and the date the claim was filed was unintentional. The Commissioner may require additional information where there is a question whether the delay was unintentional.

The petition does not comply with item (1)

37 CFR 1.78(a)(2)(i) requires that any nonprovisional application claiming the benefit of one or more prior-filed copending nonprovisional applications must contain or be amended to contain a reference to each such prior-filed application, identifying it by application number (consisting of the series code and serial number) and indicating the relationship of the applications. The relationship between the applications is whether the subject application is a continuation,

divisional, or continuation-in-part of a prior-filed nonprovisional application. An example of a proper benefit claim is: "This application is a continuation of Application No. 10/---, filed---." A benefit claim that merely states: "This application claims the benefit of Application No. 10/---, filed---," does not comply with 37 CFR 1.72(a)(2)(i) since the proper relationship, which includes the type of continuing application, is not stated. Also, the status of each nonprovisional parent application (if it is patented or abandoned) should also be indicated, following the filing date of the parent nonprovisional application. See MPEP Section 201.11, Rev. 2, May 2004, Reference to Prior Application. The amendment filed October 19, 2005 fails to state the relationship of Application No. PCT/CN01/01522, filed November 1, 2001, to this application.

Before the petition under 37 CFR § 1.78(a)(3) can be granted, a renewed petition under 37 CFR § 1.78(a)(3) and a substitute amendment or an Application Data Sheet (complying with 37 CFR 1.121 and 37 CFR 1.76(b)(5)) which state the relationship of the prior-filed application to this application are required.

Further correspondence with respect to this matter should be addressed as follows:

By mail: Mail Stop PETITIONS
Commissioner for Patents
Post Office Box 1450
Alexandria, VA 22313-1450

By hand: Customer Service Window
Mail Stop Petitions
Randolph Building
401 Dulany Street
Alexandria, VA 22314

By fax: (571) 273-8300
ATTN: Office of Petitions

Any questions concerning this matter may be directed to Andrea Smith at (571) 272-3226.

Frances Hicks
Petitions Examiner
Office of Petitions

UNITED STATES PATENT AND TRADEMARK OFFICE

Commissioner for Patents
United States Patent and Trademark Office
P.O. Box 1450
Alexandria, VA 22313-1450
www.uspto.gov

BROUSE MCDOWELL LPA
388 SOUTH MAIN STREET
SUITE 500
AKRON, OH 44311

COPY MAILED

DEC 29 2006

OFFICE OF PETITIONS

In re Application of :
Hongfen Li :
Application No. 10/683,984 : DECISION ON PETITION
Filed: October 2, 2003 : UNDER 37 CFR 1.78(a)(3)
Attorney Docket No. 31427.24034 :

This is a decision on the renewed petition under 37 CFR 1.78(a)(3), filed June 19, 2006, to accept an unintentionally delayed claim under 35 U.S.C. §§ 120 and 365(c) for the benefit of priority to prior-filed international Application No. PCT/CN01/01522, filed November 1, 2001, as set forth in the accompanying amendment.

The petition is **GRANTED.**

A petition for acceptance of a claim for late priority under 37 CFR 1.78(a)(3) is only applicable to those applications filed on or after November 29, 2000. Further, the petition is appropriate only after the expiration of the period specified in 37 CFR 1.78(a)(2)(ii). In addition, the petition under 37 CFR 1.78(a)(3) must be accompanied by:

(1) the reference required by 35 U.S.C. § 120 and 37 CFR 1.78(a)(2)(i) of the prior-filed application, unless previously submitted;
(2) the surcharge set forth in § 1.17(t); and
(3) a statement that the entire delay between the date the claim was due under 37 CFR 1.78(a)(2)(ii) and the date the claim was filed was unintentional. The Director may require additional information where there is a question whether the delay was unintentional.

All of the above requirements having been satisfied, the late claim for priority under 35 U.S.C. §§ 120 and 365(c) is accepted as being unintentionally delayed.

The granting of the petition to accept the delayed benefit claim to the prior-filed application under 37 CFR 1.78(a)(3) should not be construed as meaning that the application is entitled to the benefit of the prior-filed application. In order for the application to be entitled to the benefit of the prior-filed application, all other requirements under 35 U.S.C. §§ 120 and 365(c) and 37 CFR 1.78(a)(1) and (a)(2) must be met. Similarly, the fact that the corrected Filing Receipt accompanying this decision on petition includes the prior-filed application should not be construed as meaning that applicant is entitled to the claim for benefit of priority to the prior-filed application noted thereon. Accordingly, the examiner will, in due course, consider this benefit claim and determine whether the application is entitled to the benefit of the earlier filing date.

A corrected Filing Receipt, which includes the priority claim to the prior-filed application, accompanies this decision on petition.

Any inquiries concerning this decision may be directed to Andrea Smith at (571) 272-3226. All other inquiries concerning either the examination procedures or status of the application should be directed to the Technology Center.

This application is being forwarded to the examiner of Technology Center Art Unit 1655, for consideration of applicant's entitlement to claim benefit of priority under 35 U.S.C. §§ 120 and 365(c) to the above-noted, prior-filed PCT application.

Frances Hicks
Petitions Examiner
Office of Petitions

ATTACHMENT: Corrected Filing Receipt

UNITED STATES PATENT AND TRADEMARK OFFICE

UNITED STATES DEPARTMENT OF COMMERCE
United States Patent and Trademark Office
Address: COMMISSIONER FOR PATENTS
P.O. Box 1450
Alexandria, Virginia 22313-1450
www.uspto.gov

APPL NO.	FILING OR 371 (c) DATE	ART UNIT	FIL FEE REC'D	ATTY.DOCKET NO	DRAWINGS	TOT CLMS	IND CLMS
10/683,984	10/02/2003	1655	385	31427.24034		19	1

CONFIRMATION NO. 3450

26781
BROUSE MCDOWELL LPA
388 SOUTH MAIN STREET
SUITE 500
AKRON, OH 44311

CORRECTED FILING RECEIPT

OC000000021690410

Date Mailed: 12/21/2006

Receipt is acknowledged of this regular Patent Application. It will be considered in its order and you will be notified as to the results of the examination. Be sure to provide the U.S. APPLICATION NUMBER, FILING DATE, NAME OF APPLICANT, and TITLE OF INVENTION when inquiring about this application. Fees transmitted by check or draft are subject to collection. Please verify the accuracy of the data presented on this receipt. **If an error is noted on this Filing Receipt, please mail to the Commissioner for Patents P.O. Box 1450 Alexandria Va 22313-1450. Please provide a copy of this Filing Receipt with the changes noted thereon. If you received a "Notice to File Missing Parts" for this application, please submit any corrections to this Filing Receipt with your reply to the Notice. When the USPTO processes the reply to the Notice, the USPTO will generate another Filing Receipt incorporating the requested corrections (if appropriate).**

Applicant(s)

Hongfen Li, Tel-Aviv, ISRAEL;

Power of Attorney:

Daniel Thomson--43189

Domestic Priority data as claimed by applicant

This application is a CON of PCT/CN01/01522 11/01/2001

Foreign Applications

ISRAEL 135447 04/02/2001

If Required, Foreign Filing License Granted: 01/05/2004

The country code and number of your priority application, to be used for filing abroad under the Paris Convention, is US10/683,984

Projected Publication Date: Not Applicable

Non-Publication Request: No

Early Publication Request: No

**** SMALL ENTITY ****

Title

Composition for treatment of asthma

Preliminary Class

424

PROTECTING YOUR INVENTION OUTSIDE THE UNITED STATES

Since the rights granted by a U.S. patent extend only throughout the territory of the United States and have no effect in a foreign country, an inventor who wishes patent protection in another country must apply for a patent in a specific country or in regional patent offices. Applicants may wish to consider the filing of an international application under the Patent Cooperation Treaty (PCT). An international (PCT) application generally has the same effect as a regular national patent application in each PCT-member country. The PCT process **simplifies** the filing of patent applications on the same invention in member countries, but **does not result** in a grant of "an international patent" and does not eliminate the need of applicants to file additional documents and fees in countries where patent protection is desired.

Almost every country has its own patent law, and a person desiring a patent in a particular country must make an application for patent in that country in accordance with its particular laws. Since the laws of many countries differ in various respects from the patent law of the United States, applicants are advised to seek guidance from specific foreign countries to ensure that patent rights are not lost prematurely.

Applicants also are advised that in the case of inventions made in the United States, the Director of the USPTO must issue a license before applicants can apply for a patent in a foreign country. The filing of a U.S. patent application serves as a request for a foreign filing license. The application's filing receipt contains further information and guidance as to the status of applicant's license for foreign filing.

Applicants may wish to consult the USPTO booklet, "General Information Concerning Patents" (specifically, the section entitled "Treaties and Foreign Patents") for more information on timeframes and deadlines for filing foreign patent applications. The guide is available either by contacting the USPTO Contact Center at 800-786-9199, or it can be viewed on the USPTO website at http://www.uspto.gov/web/offices/pac/doc/general/index.html.

For information on preventing theft of your intellectual property (patents, trademarks and copyrights), you may wish to consult the U.S. Government website, http://www.stopfakes.gov. Part of a Department of Commerce initiative, this website includes self-help "toolkits" giving innovators guidance on how to protect intellectual property in specific countries such as China, Korea and Mexico. For questions regarding patent enforcement issues, applicants may call the U.S. Government hotline at 1-866-999-HALT (1-866-999-4158).

LICENSE FOR FOREIGN FILING UNDER
Title 35, United States Code, Section 184
Title 37, Code of Federal Regulations, 5.11 & 5.15

GRANTED

The applicant has been granted a license under 35 U.S.C. 184, if the phrase "IF REQUIRED, FOREIGN FILING LICENSE GRANTED" followed by a date appears on this form. Such licenses are issued in all applications where the conditions for issuance of a license have been met, regardless of whether or not a license may be required as set forth in 37 CFR 5.15. The scope and limitations of this license are set forth in 37 CFR 5.15(a) unless an earlier license has been issued under 37 CFR 5.15(b). The license is subject to revocation upon written notification. The date indicated is the effective date of the license, unless an earlier license of similar scope has been granted under 37 CFR 5.13 or 5.14.

This license is to be retained by the licensee and may be used at any time on or after the effective date thereof unless it is revoked. This license is automatically transferred to any related applications(s) filed under 37 CFR 1.53(d). This license is not retroactive.

The grant of a license does not in any way lessen the responsibility of a licensee for the security of the subject matter as imposed by any Government contract or the provisions of existing laws relating to espionage and the national security or

the export of technical data. Licensees should apprise themselves of current regulations especially with respect to certain countries, of other agencies, particularly the Office of Defense Trade Controls, Department of State (with respect to Arms, Munitions and Implements of War (22 CFR 121-128)); the Bureau of Industry and Security, Department of Commerce (15 CFR parts 730-774); the Office of Foreign Assets Control, Department of Treasury (31 CFR Parts 500+) and the Department of Energy.

NOT GRANTED

No license under 35 U.S.C. 184 has been granted at this time, if the phrase "IF REQUIRED, FOREIGN FILING LICENSE GRANTED" DOES NOT appear on this form. Applicant may still petition for a license under 37 CFR 5.12, if a license is desired before the expiration of 6 months from the filing date of the application. If 6 months has lapsed from the filing date of this application and the licensee has not received any indication of a secrecy order under 35 U.S.C. 181, the licensee may foreign file the application pursuant to 37 CFR 5.15(b).

UNITED STATES PATENT AND TRADEMARK OFFICE

Commissioner for Patents
United States Patent and Trademark Office
P.O. Box 1450
Alexandria, VA 22313-1450
www.uspto.gov

HARMAN - BRINKS HOFER CHICAGO
BRINKS HOFER GILSON & LIONE
P.O. BOX 10395
CHICAGO, IL 60610

MAILED

SEP 28 2009

OFFICE OF PETITIONS

In re Application of :
Allan O. DEVANTIER, et *al.* :
Application No. 10/684,043 : DECISION ON PETITION TO
Filed: October 10, 2003 : WITHDRAW FROM RECORD
Attorney Docket No. **11336-435 (P03061US)** :

This is a decision on the Request to Withdraw as attorney or agent of record under 37 C.F.R. § 1.36(b), filed August 28, 2009.

The request is **APPROVED**.

A grantable request to withdraw as attorney/agent of record must be signed by every attorney/agent seeking to withdraw or contain a clear indication that one attorney is signing on behalf of another/others.

The request was signed by Sanders N. Hillis on behalf of all attorneys of record. All attorneys/agents associated have been withdrawn. Applicant is reminded that there is no attorney of record at this time.

All future communications from the Office will be directed to the assignee of the entire interest at the address below until otherwise properly notified by the applicant.

Telephone inquiries concerning this decision should be directed to the undersigned at 571-272-7253.

/Monica A. Graves/
Petitions Examiner, Office of Petitions

cc: **HARMAN INTERNATIONAL INDUSTIRIES, INC.**
C/O ROBERT HART
8500 BALBOA BOULEVARD
NORTHRIDGE, CA 91329

UNITED STATES PATENT AND TRADEMARK OFFICE

UNITED STATES DEPARTMENT OF COMMERCE
United States Patent and Trademark Office
Address: COMMISSIONER FOR PATENTS
P.O. Box 1450
Alexandria, Virginia 22313-1450
www.uspto.gov

TOWNSEND AND TOWNSEND AND CREW LLP/ORACLE
TWO EMBARCADERO CENTER
8TH FLOOR
SAN FRANCISCO, CA 94111-3834

Mail Date: 04/21/2010

Applicant	: David Thompson	: DECISION ON REQUEST FOR
Patent Number	: 7599948	: RECALCULATION of PATENT
Issue Date	: 10/06/2009	: TERM ADJUSTMENT IN VIEW
Appliction No	: 10/684,055	: OF WYETH AND NOTICE OF INTENT TO
Filed	: 10/10/2003	: ISSUE CERTIFICATE OF CORRECTION
		:

The Request for Recalculation is **GRANTED** to the extent indicated.

The patent term adjustment has been determined to be **647** days. The USPTO will *sua sponte* issue a certificate of correction reflecting the amount of PTA days determined by the recalculation.

Prior to the issuance of the certificate of correction, the USPTO will afford patentee an opportunity to be heard and request reconsideration. Accordingly, patentee has **one month or thirty (30) days**, whichever is longer, to file a request for reconsideration of this patent term adjustment calculation. See 35 U.S.C. 154(b)(3)(B)(ii) and 37 CFR 1.322(a)(4). No extensions of time will be granted under 37 CFR 1.136.

Patentee should use document code PET.OP if electronically filing a request for reconsideration of this patent term adjustment calculation. The patentee must also include the information required by 37 CFR 1.705(b)(2) and the fee required by 37 CFR 1.18(e). If patentee does not file a timely request for reconsideration of this patent term adjustment calculation including the information required by 37 CFR 1.705(b)(2) and the fee required by 37 CFR 1.18(e), the USPTO will issue a certificate of correction reflecting the PTA determination noted above.

Patentee should be aware that in order to preserve the right to review in the United States District Court for the District of Columbia of the USPTO patent term adjustment determination, patentee must ensure that he or she also take the steps required under 35 U.S.C. 154(b)(4)(A) in a timely manner. Nothing in the request for recalculation should be construed as providing an alternative time frame for commencing a civil action under 35 U.S.C. 154(b)(4)(A).

Any questions concerning this decision should be directed to the Office of Patent Legal Administration at 571-272-7702.

UNITED STATES PATENT AND TRADEMARK OFFICE

Commissioner for Patents
United States Patent and Trademark Office
P.O. Box 1450
Alexandria, VA 22313-1450
www.uspto.gov

Mr. Mark Wurm, Intellectual Property Law Dept.
Lockheed Martin Maritime Systems & Sensors
Manassas, Bldg. 400, Mail Drop 043
9500 Godwin Drive
Manassas VA 20110

MAILED

SEP 23 2009

OFFICE OF PETITIONS

In re Patent No. 7,373,432 :
Issue Date: May 13, 2008 :
Application No. 10/684,057 : DECISION ON PETITION
Filed: October 9, 2003 :
Attorney Docket No. 1934-14-3 :

This is a decision on the petition, filed February 6, 2009, which is being treated as a request under 37 CFR 3.81(b)[1] to correct the assignee's name on the Fee(s) Transmittal form PTOL-85(b) by way of a certificate of correction in the patent to be issued from the above-identified application.

The request is **GRANTED**.

Petitioner states that the correct assignee's name is "Lockheed Martin Corporation"- address in Bethesda, MD - and that the incorrect assignee's name and address was included on the Fee(s) Transmittal form PTOL-85(b) at the time of payment of the issue fee. Accordingly, petitioner requests that a certificate of correction be issued to reflect the correct assignee name and address on the front page of the Letters Patent in the patent.

37 CFR 3.81(b), effective June 25, 2004, reads:

> *After payment of the issue fee:* Any request for issuance of an application in the name of the assignee submitted after the date of payment of the issue fee, and any request for a patent to be corrected to state the name of the assignee, must state that the assignment was submitted for recordation as set forth in § 3.11 before issuance of the patent, and must include a request for a certificate of correction under § 1.323 of this chapter (accompanied by the fee set forth in § 1.20(a) and the processing fee set forth in § 1.17(i) of this chapter

[1] *See* MPEP 1309, subsection II; and Official Gazette of June 22, 2004.

The request was accompanied by a certificate of correction (and fee) as required by 3.81(b). Further, Office assignment records reflect that "Lockheed Martin Corporation" – address in Bethesda, MD - is the assignee of record. Accordingly, as the request complies with the provisions of 37 CFR 3.81(b), it is granted.

The file does not indicate a change of address has been submitted, although the address given on the petition differs from the address of record. If appropriate, a change of address should be filed in accordance with MPEP 601.03. A courtesy copy of this decision is being mailed to the address given on the petition; however, the Office will mail all future correspondence solely to the address of record.

Inquiries concerning this decision should be directed to the undersigned at (571) 272-3230. Any questions concerning the issuance of a certificate of correction should be directed to the Certificates of Correction Branch at (571) 272-4200.

This matter is being referred to the Certificates of Correction Branch for processing of a certificate of correction after issuance of this application into a patent.

Shirene Willis Brantley
Senior Petitions Attorney
Office of Petitions

CC: PAUL F. RUSYN
GRAYBEAL JACKSON LLP
115-108TH AVENUE NE, SUITE 350
BELLEVUE WA 98004-5973

UNITED STATES PATENT AND TRADEMARK OFFICE

Commissioner for Patents
United States Patent and Trademark Office
P.O. Box 1450
Alexandria, VA 22313-1450
www.uspto.gov

TOWNSEND, TOWNSEND and CREW, LLP
TWO EMBARCADERO CENTER
8TH FLOOR
SAN FRANCISCO, CALIFORNIA 94111-3834

MAILED

APR 0 4 2005

Technology Center 2100

In re Application of: HIREZAKI ET AL.
Application No. 10/684,060
Filed: October 10, 2003
For: CONTROL METHOD OF STORAGE SYSTEM, STORAGE SYSTEM AND STORAGE APPARATUS

DECISION ON PETITION FOR ACCELERATED EXAMINATION UNDER M.P.E.P.§708.02(VIII) & 37 C.F.R. 102(d)

This is a decision on the petition filed **November 15, 2004** under 37 C.F.R. 102(d) and M.P.E.P. § 708.02(VIII): Accelerated Examination, to make the above-identified application special.

The Petition is **DISMISSED**.

M.P.E.P. § 708.02, Section VIII which sets out the prerequisites for a grantable petition for Accelerated Examination under 37 C.F.R. § 102(d) states in relevant part:

A new application (one which has not received any examination by the examiner) may be granted special status provided that applicant (and this term includes applicant's attorney or agent) complies with each of the following items:

(a) Submits a petition to make special accompanied by the fee set forth in 37 CFR 1.17(h);

(b) Presents all claims directed to a single invention, or if the Office determines that all the claims presented are not obviously directed to a single invention, will make an election without traverse as a prerequisite to the grant of special status;

(c) Submits a statement(s) that a pre-examination search was made, listing the field of search by class and subclass, publication, Chemical Abstracts, foreign patents, etc. The pre-examination search must be directed to the invention as claimed in the application for which special status is requested. A search made by a foreign patent office satisfies this requirement;

(d) Submits one copy each of the references deemed most closely related to the subject matter encompassed by the claims if said references are not already of record; and

(e) Submits a detailed discussion of the references, which discussion points out, with the particularity required by 37 CFR 1.111 (b) and (c), how the claimed subject matter is patentable over the references.

The petition filed November 15, 2004 fails to adequately meet requirements (e) of the criteria set forth above. With respect to requirement (e), applicant must point out how the claimed subject matter is patentable over the references. The application has independent claims 1, 2, 4, and 6-11. The statement of the features missing from the cited references appears to be present in claim 6 only; all of the features are not present in claims 1, 2, 4, or 7-11. For example, claims 1-2, 7, 8, and 10 do not clearly set forth the "power-off" feature; while, claims 4, 9, and 11 do not clearly set forth the "power-on" feature.

The submission does not satisfy the requirement, as it does not provide a **detailed discussion** of the references and it does not point out how the **claimed subject matter is patentable over the references.** Petitioner should ensure that the above discussion is directed to how the language of **each** of the independent claims is specifically distinguishable and patentable from the references provided in requirement (d) above.

Petition to Make Special **DISMISSED;** since, all of the requirements for special status under MPEP § 708.02(VIII) have not been met.

Petitioner is given one month to perfect the petition. Any request for reconsideration must be filed within TWO MONTHS of the mail date of this decision.

Until the renewed petition is submitted, the application will be returned to the examiner's docket to await treatment on the merits in the normal order of examination.

Brian L. Johnson
Special Program Examiner
Technology Center 2100
Computer Architecture, Software and Information Security
571-272-3595

4/1/05

JC

UNITED STATES PATENT AND TRADEMARK OFFICE

Commissioner for Patents
United States Patent and Trademark Office
P.O. Box 1450
Alexandria, VA 22313-1450
www.uspto.gov

TOWNSEND, TOWNSEND AND CREW, LLP.
TWO EMBARCADERO CENTER
8TH FLOOR
SAN FRANCISCO, CALIFORNIA 94111-3834

MAILED
JUL 12 2005
Technology Center 2100

In re Application of: HIREZAKI ET AL.
Application No. 10/684,060
Filed: October 10, 2003
For: CONTROL METHOD OF STORAGE SYSTEM, STORAGE SYSTEM, AND STORAGE APPARATUS

DECISION ON PETITION FOR ACCELERATED EXAMINATION UNDER M.P.E.P.§708.02(VIII)

This is a response to the renewed petition filed April 25, 2005, on Applicant's petition to make special under 37 C.F.R. 102(d) and M.P.E.P. § 708.02(VIII): Accelerated Examination, originally filed on November 15, 2004 and dismissed in the decision mailed on April 4, 2005.

The Petition is **GRANTED**.

M.P.E.P. § 708.02, Section VIII which sets out the prerequisites for a grantable petition for Accelerated Examination under 37 C.F.R. § 102(d) states in relevant part:

A new application (one which has not received any examination by the examiner) may be granted special status provided that applicant (and this term includes applicant's attorney or agent) complies with each of the following items:

(a) Submits a petition to make special accompanied by the fee set forth in 37 CFR 1.17(h);

(b) Presents all claims directed to a single invention, or if the Office determines that all the claims presented are not obviously directed to a single invention, will make an election without traverse as a prerequisite to the grant of special status;

(c) Submits a statement(s) that a pre-examination search was made, listing the field of search by class and subclass, publication, Chemical Abstracts, foreign patents, etc. The pre-examination search must be directed to the invention as claimed in the application for which special status is requested. A search made by a foreign patent office satisfies this requirement;

(d) Submits one copy each of the references deemed most closely related to the subject matter encompassed by the claims if said references are not already of record; and

(e) Submits a detailed discussion of the references, which discussion points out, with the particularity required by 37 CFR 1.111 (b) and (c), how the claimed subject matter is patentable over the references.

Petition to Make Special **GRANTED** since all of the requirements for special status under MPEP § 708.02(VIII) have been met.

The application file is being forwarded to the Examiner for accelerated examination in accordance with the procedures set forth in M.P.E.P. §708.02, Section VIII. If the application is subsequently allowed, it will be given priority for printing. See M.P.E.P. §1309.

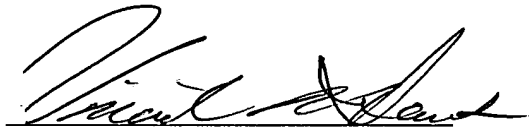

Brian L. Johnson
Special Program Examiner
Technology Center 2100
Computer Architecture, Software and Information Security
571-272-3595

AWK

SPE RESPONSE FOR CERTIFICATE OF CORRECTION

Paper No.: _____

DATE : 3-29-06

TO SPE OF : ART UNIT 3662

SUBJECT : Request for Certificate of Correction for Appl. No.: 10/684081 Patent No.: 6977610

Please respond to this request for a certificate of correction within 7 days.

Please review the requested changes/corrections as shown in the **COCIN** document(s) in the IFW application image. No new matter should be introduced, nor should the scope or meaning of the claims be changed.

Please complete the response (see below) and forward the completed response to scanning using document code **COCX**.

Check Abstract / Figs.

E Young
Certificates of Correction Branch
703-308-9390 ext. 117

Thank You For Your Assistance

The request for issuing the above-identified correction(s) is hereby:

Note your decision on the appropriate box.

☒ **Approved**	All changes apply.
☐ **Approved in Part**	Specify below which changes **do not** apply.
☐ **Denied**	State the reasons for denial below.

Comments: _____

Thomas M Dalbo
SPE

3662
Art Unit

UNITED STATES PATENT AND TRADEMARK OFFICE

Commissioner for Patents
United States Patent and Trademark Office
P.O. Box 1450
Alexandria, VA 22313-1450
www.uspto.gov

HITACHI GLOBAL STORAGE TECHNOLOGIES, INC.
5600 COTTLE ROAD, NHGB/0142
IP DEPARTMENT
SAN JOSE, CA 95193

COPY MAILED

OCT 2 1 2008

OFFICE OF PETITIONS

In re Application of	:	
Baugh et al.	:	
Application No. 10/684,097	:	DECISION ON PETITION
Filed: October 10, 2003	:	
Attorney Docket No. HSJ9200330193US1	:	

This is a decision on the petition filed in the above-identified application.

The petition is **DISMISSED**.

The rules and statutory provisions governing the operations of the U.S. Patent and Trademark Office require payment of a fee on filing each petition to revive an abandoned application for patent based on unintentional delay or to accept an unintentionally delayed payment of a fee for issuing a patent. In this instance, the fee required by law is $1,540. If applicant can qualify as a "small entity" and does so prior to or together with the payment of the fee, the fee will be one-half of the amount indicated. *See* 37 CFR 1.27.

The petition in the above-identified application was not accompanied by payment of the required fee. No consideration on the merits can be given to the petition until the required fee is received.

However, if petitioner contends the reason of the abandonment in the above application and believes that no fee should be assessed, a petition under 37 CFR 1.181 to withdraw the holding of abandonment may be more appropriate. *See* MPEP 711.03(c)(I)(A) "Petition To Withdraw Holding of Abandonment Based on Failure To Receive Office Action". Petitioner should note that filing a petition under 37 CFR 1.181 does not necessarily guarantee that it will be granted.

The Power of Attorney filed September 22, 2008 is hereby accepted and made of record. The Notice of Acceptance of Power of Attorney is enclosed

Further correspondence with respect to this matter should be addressed as follows:

By mail:	Mail Stop PETITIONS Commissioner for Patents Post Office Box 1450 Alexandria, VA 22313-1450
By hand:	Customer Service Window Mail Stop Petitions Randolph Building 401 Dulany Street Alexandria, VA 22314
By fax:	(571) 273-8300 ATTN: Office of Petitions

Any questions concerning this matter may be directed to Alicia Kelley at (571) 272-6059.

/SDB/

Sherry D. Brinkley
Petitions Examiner
Office of Petitions

UNITED STATES PATENT AND TRADEMARK OFFICE

Commissioner for Patents
United States Patent and Trademark Office
P.O. Box 1450
Alexandria, VA 22313-1450
www.uspto.gov

HITACHI GLOBAL STORAGE TECHNOLOGIES, INC.
5600 COTTLE ROAD, NHGB/0142
IP DEPARTMENT
SAN JOSE, CA 95193

COPY MAILED

JAN 2 6 2009

OFFICE OF PETITIONS

In re Application of	:	
Baugh et al.	:	
Application No. 10/684,097	:	DECISION ON PETITION
Filed: October 10, 2003	:	
Attorney Docket No. HSJ920030193US1	:	

This is a decision on the petition, filed December 12, 2008, which is being treated as a petition under 37 CFR 1.181 (no fee) requesting withdrawal of the holding of abandonment in the above-identified application.

The petition is **GRANTED**.

This application became abandoned by operation of law for a failure to reply to the non-final Office action mailed January 24, 2008.

Petitioner asserts that the Office action dated January 24, 2008 was not received, since the Office mailed the communication to wrong correspondence address. Petitioner alleges that a proper Revocation of Power of Attorney with New Power of Attorney and Change of Correspondence Address form was filed on December 9, 2004; however the form was incorrectly processed. Petitioner explains that the Office used 38023 as the customer number, rather than the correct number of 36023 when changing the correspondence address for this application. Accordingly, petitioner request that the abandonment be withdrawn.

A review of the written record does indicate an irregularity in the mailing of the Office action of January 24, 2008. In this regard, the Office received the revocation and power of attorney, including the change of correspondence address on December 9, 2004, which was prior to the mailing of the Office action of January 24, 2008. It is noted that the December 9, 2004 revocation and power of attorney was not acceptable, as it was filed on behalf of the assignee, without the statement required under 37 CFR 3.73(b). Nonetheless, Office records were not updated to correctly reflect the change of correspondence address, per an attorney of record. Consequently, the Office action was mailed to an incorrect address.

In view of the above, the holding of abandonment is hereby withdrawn.

This application is being referred to the Technology Center Art Unit 2614 for appropriate action by the Examiner in the normal course of business on the amendment filed December 12, 2008.

Telephone inquiries concerning this decision should be directed to Alicia Kelley at (571) 272-6059.

/SDB/

Sherry D. Brinkley
Petitions Examiner
Office of Petitions

UNITED STATES PATENT AND TRADEMARK OFFICE

Commissioner for Patents
United States Patent and Trademark Office
P.O. Box 1450
Alexandria, VA 22313-1450
www.uspto.gov

Bryan A. Santarelli
GRAYBEAL JACKSON HALEY LLP
Suite 350
155 - 108th Avenue NE
Bellevue WA 98004-5901

COPY MAILED

JUN 23 2008

OFFICE OF PETITIONS

In re Application of :
Mathur, et al. :
Application No. 10/684,102 : ON PETITION
Filed: October 9, 2003 :
Attorney Docket No. 1934-11-3 :

This is a decision on the petition under 37 CFR 1.137(b), filed February 11, 2008 (certificate of mailing date February 7, 2008), to revive the above-identified application.

This application became abandoned for failure to timely pay the issue fee and publication fee within three (3) months of the mailing of the Notice of Allowance and Fee(s) Due, mailed November 2, 2007. Accordingly, this application became abandoned on February 3, 2008. A Notice of Abandonment was mailed on February 15, 2008.

Applicants have submitted a proper reply in the form of the issue fee, the publication fee and a completed PTOL-85, an acceptable statement of the unintentional nature of the delay in responding to the November 2, 2007 Notice of Allowance and Fee(s) Due, and the petition fee.

The petition is **granted**.

This application is being forwarded to Technology Center AU 2181 for consideration of the 312 amendment, filed February 11, 2008 (certificate of mailing date February 7, 2008).

Telephone inquiries concerning this matter may be directed to the undersigned at (571) 272-3230.

Shirene Willis Brantley

Shirene Willis Brantley
Senior Petitions Attorney
Office of Petitions

SPE RESPONSE FOR CERTIFICATE OF CORRECTION

Paper No.: _____

DATE : 06/16/10

TO SPE OF : ART UNIT 1646

7396913

SUBJECT : Request for Certificate of Correction for Appl. No.: 10684109 Patent No.: ~~7765628~~

Please respond to this request for a certificate of correction within 7 days.

FOR IFW FILES:

Please review the requested changes/corrections as shown in the **COCIN** document(s) in the IFW application image. No new matter should be introduced, nor should the scope or meaning of the claims be changed.

Please complete the response (see below) and forward the completed response to scanning using document code **COCX**.

FOR PAPER FILES:

Please review the requested changes/corrections as shown in the attached certificate of correction. Please complete this form (see below) and forward it with the file to:

Certificates of Correction Branch (C of C)
Randolph Square 9D40-D
Palm Location 7580
You can fax the Directors/SPE response to 571-270-9990

Lamonte Newsome
Certificates of Correction Branch
703-756-1574

Thank You For Your Assistance

The request for issuing the above-identified correction(s) is hereby:
Note your decision on the appropriate box.

- ☑ **Approved** — All changes apply.
- ☐ **Approved in Part** — Specify below which changes **do not** apply.
- ☐ **Denied** — State the reasons for denial below.

Comments: _____

[signature]
SPE

1646
Art Unit

nd Trademark Office

UNITED STATES PATENT AND TRADEMARK OFFICE

Commissioner for Patents
United States Patent and Trademark Office
P.O. Box 1450
Alexandria, VA 22313-1450
www.uspto.gov

COPY MAILED

MAY 26 2009

OFFICE OF PETITIONS

LSI CORPORATION
1621 BARBER LANE
MS: D-105
MILPITAS CA 95035

In re Application of :
Chaitanya PALUSA :
Application No. 10/684,119 : NOTICE UNDER 37 CFR. 1.29(c)
Filed: October 10, 2003 :
Attorney Docket No. **00-513/1D (B700885D)** :

This is a notice regarding your request for acceptance of a fee deficiency submission under 37 CFR 1.28.

The Office no longer investigates or rejects original or reissue patent under 37 CFR 1.56. **1098 Off. Gaz. Pat. Office 502 (January 3, 1989)**. Therefore, nothing in this Notice is intended to imply that an investigation was done.

Your fee deficiency submission under 37 CFR 1.28 is hereby **ACCEPTED**.

This patent is no longer entitled to small entity status. Accordingly, all future fees paid in this patent must be paid at the large entity rate.

Inquiries related to this communication should be directed to Tredelle Jackson at (571) 272-2783.

Ramesh Krishnamurthy
Petitions Examiner
Office of Petitions

DAC $
IFW (5)
128C

OIPE IAP30 AUG 04 2008 PATENT & TRADEMARK OFFICE

2008 AUG -7 PM 2:09

IN THE UNITED STATES PATENT AND TRADEMARK OFFICE

I hereby certify that this correspondence is being deposited with the United States Postal Service as first class mail in an envelope addressed to: Commissioner for Patents, Alexandria, VA 22313-1450
on: 7/31/08
Date of Deposit
Signature

Applicant: Chaitanya Palusa
Patent No.: 6,842,032
Issued: January 11, 2005
Serial No.: 10/684,119
Filed: October 10, 2003
Title: IDDQ Test Methodology Based On The Sensitivity Of Fault Current To Power Supply Variations
Grp./A.U.: 2829
Examiner: Vinh P. Nguyen

RECEIVED
AUG 11 2008
OFFICE OF PETITIONS

Correction Of Small Entity Status
Under 37 C.F.R.§ 1.28(c)

08/07/2008 DALLEN 00000029 122252 10684119
01 FC:1461 715.00 DA

Commissioner for Patents
P.O. Box 1450
Alexandria, VA 22313-1450

Sir:

Applicant's seek correction of small entity status under 37 C.F.R.§ 1.28(c) in the above-identified application, which was recently discovered to have been originally established in error.

Application serial number 10/684,119 (our docket number 00-513/1D) is a divisional application that issued on January 11, 2005, as U.S. Patent 6,842,032. The itemization of the deficiency below includes the parent application serial number 09/862,045 (our docket number 00-513) which issued on December 16, 2003, as U.S. Patent 6,664,801.

In accordance with 37 C.F.R.§ 1.28(c)(2), an itemization of the deficiency owed to the USPTO, resulting from previous erroneous payments of small entity fees, is

determined as follows:

00-513	09/862,045	6,664,801	Deficiency Amount Owed
Filing fee	Paid 5/24/2001	$710.00	0
Recordation fee	Paid 6/11/2001	$40	0
Issue fee	Paid 10/17/2003	$1330 large entity	0
Patent copies	Paid 11/14/2003	$30	0
Maintenance fee	Paid 5/22/2007	$900	0
00-513/1D	**10/684,119**	**6,842,038**	
Filing fee	Paid 10/20/2003	$385	$425.00
Claims in excess of 20	Paid 10/20/2003	$27	$ 123.00
Independent claims in excess of 3	Paid 10/20/2003	$43	$167.00
Issue fee	Paid 10/01/2004	$1330 large entity	0
Publication fee	Paid 10/01/2004	$300	0
Total Deficiency Amount Owed			$715.00

Please charge LSI Deposit Account No. 12-2252 the total amount of $715.00 to cover the deficiency owed. In the event of non-payment or improper payment of a required fee, the Commissioner is authorized to charge or to credit Deposit Account No. 12-2252 as required to correct the error.

Respectfully,

David L. Smith, Reg. No. 30592
Attorney for Applicant(s)

Date: July 31, 2008

PART B - FEE(S) TRANSMITTAL

Complete and send this form, together with applicable fee(s), to: Mail Mail Stop ISSUE FEE
Commissioner for Patents
P.O. Box 1450
Alexandria, Virginia 22313-1450
or Fax (703) 746-4000

INSTRUCTIONS: This form should be used for transmitting the ISSUE FEE and PUBLICATION FEE (if required). Blocks 1 through 5 should be completed wh appropriate. All further correspondence including the Patent, advance orders and notification of maintenance fees will be mailed to the current correspondence address indicated unless corrected below or directed otherwise in Block 1, by (a) specifying a new correspondence address; and/or (b) indicating a separate "FEE ADDRESS" maintenance fee notifications.

CURRENT CORRESPONDENCE ADDRESS (Note: Use Block 1 for any change of address)

24319 7590 09/24/2004

LSI LOGIC CORPORATION
1621 BARBER LANE
MS: D-106 LEGAL
MILPITAS, CA 95035

10/01/2004 TBESHAH2 00000127 122252 10684119

01 FC:1501 1330.00 DA
02 FC:1504 300.00 DA

OIPE SEP 30 2004 PATENT & TRADEMARK OFFICE

Note: A certificate of mailing can only be used for domestic mailings of Fee(s) Transmittal. This certificate cannot be used for any other accompany papers. Each additional paper, such as an assignment or formal drawing, m have its own certificate of mailing or transmission.

Certificate of Mailing or Transmission

I hereby certify that this Fee(s) Transmittal is being deposited with the Un States Postal Service with sufficient postage for first class mail in an envel addressed to the Mail Stop ISSUE FEE address above, or being facsim transmitted to the USPTO (703) 746-4000, on the date indicated below.

Connie del Castillo	(Depositor's na
Connie del Castillo	(Signat
9/30/04	D

APPLICATION NO.	FILING DATE	FIRST NAMED INVENTOR	ATTORNEY DOCKET NO.	CONFIRMATION NO.
10/684,119	10/10/2003	Chaitanya Palusa	00-513/ID (B700885D)	2731

TITLE OF INVENTION: IDDQ TEST METHODOLOGY BASED ON THE SENSITIVITY OF FAULT CURRENT TO POWER SUPPLY VARIATIONS

APPLN. TYPE	SMALL ENTITY	ISSUE FEE	PUBLICATION FEE	TOTAL FEE(S) DUE	DATE DUE
nonprovisional	NO ~~YES~~	~~$669~~ $1330	$300	~~$969~~ $1630	12/27/2004

EXAMINER	ART UNIT	CLASS-SUBCLASS
NGUYEN, VINH P	2829	324-765000

1. Change of correspondence address or indication of "Fee Address" (37 CFR 1.363).
- ☐ Change of correspondence address (or Change of Correspondence Address form PTO/SB/122) attached.
- ☐ "Fee Address" indication (or "Fee Address" Indication form PTO/SB/47; Rev 03-02 or more recent) attached. Use of a Customer Number is required.

2. For printing on the patent front page, list
(1) the names of up to 3 registered patent attorneys or agents OR, alternatively,
(2) the name of a single firm (having as a member a registered attorney or agent) and the names of up to 2 registered patent attorneys or agents. If no name is listed, no name will be printed.

1 Akin Gump Strauss Hauer & Feld, LLP
2
3

3. ASSIGNEE NAME AND RESIDENCE DATA TO BE PRINTED ON THE PATENT (print or type)

PLEASE NOTE: Unless an assignee is identified below, no assignee data will appear on the patent. If an assignee is identified below, the document has been filed recordation as set forth in 37 CFR 3.11. Completion of this form is NOT a substitute for filing an assignment.

(A) NAME OF ASSIGNEE: LSI Logic Corporation

(B) RESIDENCE: (CITY and STATE OR COUNTRY): Milpitas, CA

Please check the appropriate assignee category or categories (will not be printed on the patent): ☐ Individual ☒ Corporation or other private group entity ☐ Governm

4a. The following fee(s) are enclosed:
- ☐ Issue Fee
- ☐ Publication Fee (No small entity discount permitted)
- ☐ Advance Order - # of Copies _____

4b. Payment of Fee(s):
- ☐ A check in the amount of the fee(s) is enclosed.
- ☐ Payment by credit card. Form PTO-2038 is attached.
- ☒ The Director is hereby authorized by charge the required fee(s), or credit any overpayment Deposit Account Number 12-2252 (enclose an extra copy of this form).

5. Change in Entity Status (from status indicated above)
- ☐ a. Applicant claims SMALL ENTITY status. See 37 CFR 1.27.
- ☒ b. Applicant is no longer claiming SMALL ENTITY status. See 37 CFR 1.27(g)(2).

The Director of the USPTO is requested to apply the Issue Fee and Publication Fee (if any) or to re-apply any previously paid issue fee to the application identified above. NOTE: The Issue Fee and Publication Fee (if required) will not be accepted from anyone other than the applicant; a registered attorney or agent; or the assignee or other part interest as shown by the records of the United States Patent and Trademark Office.

Authorized Signature _____ Date 30 Sept 04

Typed or printed name Timothy Croll Registration No. 36,771

This collection of information is required by 37 CFR 1.311. The information is required to obtain or retain a benefit by the public which is to file (and by the USPTO to proc an application. Confidentiality is governed by 35 U.S.C. 122 and 37 CFR 1.14. This collection is estimated to take 12 minutes to complete, including gathering, preparing, submitting the completed application form to the USPTO. Time will vary depending upon the individual case. Any comments on the amount of time you require to comp this form and/or suggestions for reducing this burden, should be sent to the Chief Information Officer, U.S. Patent and Trademark Office, U.S. Department of Commerce, P Box 1450, Alexandria, Virginia 22313-1450. DO NOT SEND FEES OR COMPLETED FORMS TO THIS ADDRESS. SEND TO: Commissioner for Patents, P.O. Box 14 Alexandria, Virginia 22313-1450.

Under the Paperwork Reduction Act of 1995, no persons are required to respond to a collection of information unless it displays a valid OMB control number.

BEST AVAILABLE COPY

UNITED STATES PATENT AND TRADEMARK OFFICE

COMMISSIONER FOR PATENTS
UNITED STATES PATENT AND TRADEMARK OFFICE
P.O. BOX 1450
ALEXANDRIA, VA 22313-1450
www.uspto.gov

AUG 23 2004

STINSON MORRISON HECKER LLP
ATTN: PATENT GROUP
1201 WALNUT STREET, SUITE 2800
KANSAS CITY MO 64106-2150

In re Application of	:
Margaret Ancira et al	:
Serial No.: 10/684,136	: SUSPENSION OF ACTION
Filed: October 9, 2003	:
Attorney Docket No.: 766632-0034	:

This is in response to the petition under 37 CFR 1.103, filed May 25, 2004, to suspend prosecution of the above identified application for six months.

The petition fee of $130.00 will be charged to applicants' Deposit Account No. 19-4409, as directed.

Applicants seek suspension of the prosecution on this application for a period of six months because of a pending civil suit relating to the question of inventorship of this application.

BACKGROUND

This application was filed October 9, 2003, and has been assigned to an examiner for examination. The examiner has not yet mailed an Office action to applicants.

DISCUSSION

37 CFR 1.103. Suspension of action.

(a) Suspension of action by the Office will be granted for good and sufficient cause and for a reasonable time specified upon petition by the applicant and, if such cause is not the fault of the Office, the payment of the fee set forth in §1.17(I). Action will not be suspended when a reply by applicant to an Office action is required.

M.P.E.P. 709 relates to suspension of action in an application. 37 CFR 1.103 permits the Office to suspend action upon petition by applicants for **good and sufficient cause** (emphasis added). Applicants state that they are involved in a civil suit the purpose of which is to determine inventorship.

The question of inventorship and/or ownership of an invention is not a matter which relates to patentability of an invention. While inventorship of an application is presumed to be correct upon filing of an application, discovery of an error therein is correctable at any time during

prosecution of the application or subsequent to issuance of the application as a patent. Thus determination of inventorship is not considered to be a good and sufficient reason for suspension of action in a patent application.

DECISION

The petition to suspend action is DENIED. Applicant has not presented a "good and sufficient cause" warranting suspension of action by the examiner.

The application will be forwarded to the examiner of record for examination in turn.

Should there be any questions with respect to this decision, please contact William R. Dixon, Jr., by mail addressed to: Director, Technology Center 1600, P.O. Box 1450, Alexandria, VA 22313-1450, or by telephone at 571-272-0519 or by facsimile transmission at the general Offic facsimile number 703-872-9306.

Bruce Kisliuk
Director, Technology Center 1600

UNITED STATES PATENT AND TRADEMARK OFFICE

Commissioner for Patents
United States Patent and Trademark Office
P.O. Box 1450
Alexandria, VA 22313-1450
www.uspto.gov

FEB . 7 2005

STINSON MORRISON HECKER LLP
ATTN: PATENT GROUP
1201 WALNUT STREET, SUITE 2800
KANSAS CITY MO 64106-2150

In re Application of	:	
Margaret Ancira et al	:	
Serial No.: 10/684,136	:	SUSPENSION OF ACTION
Filed: October 9, 2003	:	
Attorney Docket No.: 766632-0034	:	

This is in response to the petition under 37 CFR 1.103, filed January 20, 2005, to suspend prosecution of the above identified application for six months.

The petition fee will be charged to applicants' Deposit Account No. 19-4409, as directed.

Applicants seek suspension of the prosecution on this application for a period of six months because of a pending civil suit relating to the question of inventorship of this application.

BACKGROUND

This application was filed October 9, 2003, and has been examined. The examiner has mailed a Notice of Allowance and Issue Fee Due to applicants.

DISCUSSION

37 CFR 1.103. Suspension of action.

(a) Suspension of action by the Office will be granted for good and sufficient cause and for a reasonable time specified upon petition by the applicant and, if such cause is not the fault of the Office, the payment of the fee set forth in 1.17(I). Action will not be suspended when a reply by applicant to an Office action is required.

M.P.E.P. 709 relates to suspension of action in an application. 37 CFR 1.103 permits the Office to suspend action upon petition by applicants for **good and sufficient cause** (emphasis added). Applicants state that they are involved in a civil suit the purpose of which is to determine inventorship.

The question of inventorship and/or ownership of an invention is not a matter which relates to patentability of an invention. While inventorship of an application is presumed to be correct upon filing of an application, discovery of an error therein is correctable at any time during prosecution of the application or subsequent to issuance of the application as a patent. Thus

determination of inventorship is not considered to be a good and sufficient reason for suspension of action in a patent application.

Further, the mailing of a Notice of Allowance and Issue Fee Due requires a reply to the Office which prohibits suspension of prosecution.

DECISION

The petition to suspend action is DENIED. Applicant has not presented a "A good and sufficient cause" warranting suspension of action by the examiner.

Should there be any questions with respect to this decision, please contact William R. Dixon, Jr., by mail addressed to: Director, Technology Center 1600, P.O. Box 1450, Alexandria, VA 22313-1450, or by telephone at 571-272-0519 or by facsimile transmission at the general Offic facsimile number 571-273-8300.

Bruce Kisliuk
Director, Technology Center 1600

UNITED STATES PATENT AND TRADEMARK OFFICE

Commissioner for Patents
United States Patent and Trademark Office
P.O. Box 1450
Alexandria, VA 22313-1450
www.uspto.gov

ROSENBAUM & ASSOCIATES, P.C.
650 DUNDEE ROAD
SUITE #380
NORTHBROOK, IL 60022-2757

COPY MAILED

JUN 15 2007

OFFICE OF PETITIONS

In re Application of :
Margaret ANCIRA, et al :
Application No. 10/684,136 : DECISION ON PETITION
Filed: October 9, 2003 : TO WITHDRAW
Attorney Docket No. 766632-0034 : FROM RECORD
:

This is a decision on the Request to Withdraw as attorney or agent under 37 C.F.R. § 1.36(b) filed December 21, 2006.

The request is **NOT APPROVED**.

A review of the file record indicates that David G. Rosenbaum does not have power of attorney in this patent application. See 37 C.F.R. § 10.40. Accordingly, the request to withdraw under 37 C.F.R. § 1.36(b) is not applicable.

All future communications from the Office will continue to be directed to the below-listed address until otherwise properly notified by the applicant.

There are no pending Office actions at the present time.

Telephone inquires concerning this decision should be directed to Diane Goodwyn at 571-272-6735

April Wise
Petitions Examiner
Office of Petitions

cc: STINSON MORRISON HECKER LLP
ATTN: PATENT GROUP
1201 WALNUT STREET, SUITE 2800
KANSAS CITY MO 64106-2150

UNITED STATES PATENT AND TRADEMARK OFFICE

Commissioner for Patents
United States Patent and Trademark Office
P.O. Box 1450
Alexandria, VA 22313-1450
www.uspto.gov

MICKEY MILLER
5855 EAST MOCKINGBIRD LANE
PARADISE VALLEY,
PHOENI, AZ 85253-2296

COPY MAILED

JUN 15 2007

OFFICE OF PETITIONS

In re Application of :
Margaret ANCIRA, et al :
Application No. 10/684,136 : DECISION ON REQUEST FOR
Filed: October 9, 2003 : REVOCATION OF POWER
Attorney Docket No. 766632-0034 : OF ATTORNEY
:

This is a decision on the Request to Revoke the attorney or agent of record under 37 C.F.R. § 1.36(a), filed April 16, 2007.

The request is **NOT APPROVED**.

A power of attorney, pursuant to § 1.32(b), may be revoked at any stage in the proceeding of a case by an applicant for patent (§ 1.41(b)) or an assignee of the entire interest of the applicant under § 3.71(b). Fewer than all of the applicants (or by fewer than the assignee of the entire interest of the applicant) may only revoke the power of attorney upon a showing of sufficient cause, and payment of the petition fee set forth § 1.17(h). For the assignee to take action a proper statement under § 3.73(b) is required.

In order to request or take action in a patent matter, the assignee must establish its ownership of the patent to the satisfaction of the Director. In this regard, a Statement under 37 CFR 3.73(b) must have either: (i) documentary evidence of a chain of title from the original owner to the assignee (*e.g.*, copy of an executed assignment), and a statement affirming that the documentary evidence of the chain of title from the original owner to the assignee was or concurrently is being submitted for recordation pursuant to § 3.11; or (ii) a statement specifying where documentary evidence of a chain of title from the original owner to the assignee is recorded in the assignment records of the Office (*e.g.*, reel and frame number). The power of attorney filed on April 16, 2007, does not include a proper chain of title.

All future communications from the Office will continue to be directed to the above-listed address until otherwise notified by applicant.

Telephone inquiries concerning this decision should be directed to Diane Goodwyn at 571-272-6735.

April Wise
Petitions Examiner
Office of Petitions

cc: RICHARD E. ONEY
TIFFANY & BOSCO, P.A.
CAMELBACK ESPLANADE II
THIRD FLOOR
2525 EAST CAMELBACK ROAD
PHOENIX, AZ 85016

UNITED STATES PATENT AND TRADEMARK OFFICE

Commissioner for Patents
United States Patent and Trademark Office
P.O. Box 1450
Alexandria, VA 22313-1450
www.uspto.gov

KIRKPATRICK & LOCKHART PRESTON GATES ELLIS LLP
55 SMITHFIELD STREET
PITTSBURGH PA 15222

COPY MAILED

NOV 29 2007

OFFICE OF PETITIONS

In re Application of :
Matyjaszewski et al. :
Application No. 10/684,137 : DECISION GRANTING PETITION
Filed: October 10, 2003 : UNDER 37 CFR 1.78(a)(6)
Attorney Docket No. 00798DIVCIP :

This is a decision on the petition under 37 CFR 1.78(a)(6), filed October 15, 2007, to accept an unintentionally delayed claim under 35 U.S.C. § 119(e) for the benefit of prior-filed provisional Application No. 60/238,809, filed October 6, 2000, as set forth in the concurrently filed amendment.

The petition is **GRANTED**.

A petition under 37 CFR 1.78(a)(6) is only applicable to those applications filed on or after November 29, 2000. Further, the petition is appropriate only after expiration of the period specified in 37 CFR 1.78(a)(5)(ii) and must be filed during the pendency of the nonprovisional application. In addition, the petition must be accompanied by:

(1) the reference required by 35 U.S.C. § 119(e) and 37 CFR 1.78(a)(5)(i) to the prior-filed application, unless previously submitted;
(2) the surcharge set forth in § 1.17(t); and
(3) a statement that the entire delay between the date the claim was due under 37 CFR 1.78(a)(5)(ii) and the date the claim was filed was unintentional. The Commissioner may require additional information where there is a question whether the delay was unintentional.

The instant nonprovisional application was filed after November 29, 2000, and the claim herein for the benefit of priority to the prior-filed provisional application is submitted after expiration of the period specified by 37 CFR 1.78(a)(5)(ii). Therefore, this is a proper petition under 37 CFR 1.78(a)(6).

The instant nonprovisional application was pending at the time of filing of the reference to the prior-filed provisional application as required by 37 1.78(a)(5)(iii). Additionally, the intermediate nonprovisional application was filed within twelve months of the filing date of the prior-filed provisional application, Application No. 60/238,809, which was filed on October 6, 2000, for which priority is claimed.

The petition complies with the requirements for a grantable petition under 37 CFR 1.78(a)(6) in that (1) a reference to the above-noted, prior-filed provisional application has been included in an amendment to the first sentence of the specification following the title, as provided by 37 CFR

1.78(a)(5)(iii); (2) the surcharge fee required by 37 CFR 1.17(t) has been submitted; and (3) the petition contains a proper statement of unintentional delay. Accordingly, having found that the instant petition for acceptance of an unintentionally delayed claim for the benefit of priority under 35 U.S.C. § 119(e) to the above-noted, prior-filed provisional application satisfies the conditions of 37 CFR 1.78(a)(6), the petition is granted.

The granting of the petition to accept the delayed benefit claim to the prior-filed application under 37 CFR 1.78(a)(6) should not be construed as meaning that the instant application is entitled to the benefit of the filing date of the prior-filed application. In order for the instant application to be entitled to the benefit of the prior-filed application, all other requirements under 35 U.S.C. §119(e) and 37 CFR 1.78(a)(4) and (a)(5) must be met. Similarly, the fact that the corrected Filing Receipt accompanying this decision on petition includes the prior-filed application should not be construed as meaning that applicant is entitled to the claim for benefit of priority to the prior-filed application noted thereon. Accordingly, the examiner will, in due course, consider this benefit claim and determine whether the instant application is entitled to the benefit of the earlier filing date.

A corrected Filing Receipt, which includes the priority claim to the prior-filed provisional application, accompanies this decision on petition.

Any inquiries concerning this decision may be directed to the undersigned at (571) 272-3206. Any other inquiries concerning either the examination procedures or status of the application should be directed to the Technology Center.

This matter is being referred to Technology Center AU 1713 for appropriate action on the amendment submitted October 15, 2007, including consideration by the examiner of the claim under 35 U.S.C. §119(e) for the benefit of priority to prior-filed provisional Application No. 60/238,809.

Liana Walsh
Petitions Examiner
Office of Petitions

ATTACHMENT: Corrected Filing Receipt

UNITED STATES PATENT AND TRADEMARK OFFICE

UNITED STATES DEPARTMENT OF COMMERCE
United States Patent and Trademark Office
Address: COMMISSIONER FOR PATENTS
P.O. Box 1450
Alexandria, Virginia 22313-1450
www.uspto.gov

APPLICATION NUMBER	FILING or 371(c) DATE	GRP ART UNIT	FIL FEE REC'D	ATTY.DOCKET.NO	TOT CLAIMS	IND CLAIMS
10/684,137	10/10/2003	1713	1472	00798DIVCIP	47	4

CONFIRMATION NO. 1296

26285
KIRKPATRICK & LOCKHART PRESTON GATES ELLIS LLP
535 SMITHFIELD STREET
PITTSBURGH, PA 15222

CORRECTED FILING RECEIPT

Date Mailed: 11/29/2007

Receipt is acknowledged of this non-provisional patent application. The application will be taken up for examination in due course. Applicant will be notified as to the results of the examination. Any correspondence concerning the application must include the following identification information: the U.S. APPLICATION NUMBER, FILING DATE, NAME OF APPLICANT, and TITLE OF INVENTION. Fees transmitted by check or draft are subject to collection. Please verify the accuracy of the data presented on this receipt. **If an error is noted on this Filing Receipt, please write to the Office of Initial Patent Examination's Filing Receipt Corrections. Please provide a copy of this Filing Receipt with the changes noted thereon. If you received a "Notice to File Missing Parts" for this application, please submit any corrections to this Filing Receipt with your reply to the Notice. When the USPTO processes the reply to the Notice, the USPTO will generate another Filing Receipt incorporating the requested corrections**

Applicant(s)

Krzysztof Matyjaszewski, Pittsburgh, PA;
Nicolay Tsarevsky, Pittsburgh, PA;

Power of Attorney:
Bernard Pike--46993

Domestic Priority data as claimed by applicant

This application is a CIP of 10/625,890 07/23/2003 ABN
which is a DIV of 09/972,260 10/05/2001 PAT 6,624,262
which claims benefit of 60/238,809 10/06/2000
This application 10/684,137
claims benefit of 60/417,591 10/10/2002

Foreign Applications

If Required, Foreign Filing License Granted: 01/09/2004

The country code and number of your priority application, to be used for filing abroad under the Paris Convention, is **US 10/684,137**

Projected Publication Date: Not Applicable

Non-Publication Request: No

Early Publication Request: No

Title

STABILIZATION OF TRANSITION METAL COMPLEXES FOR CATALYSIS IN DIVERSE ENVIRONMENTS

Preliminary Class

526

PROTECTING YOUR INVENTION OUTSIDE THE UNITED STATES

Since the rights granted by a U.S. patent extend only throughout the territory of the United States and have no effect in a foreign country, an inventor who wishes patent protection in another country must apply for a patent in a specific country or in regional patent offices. Applicants may wish to consider the filing of an international application under the Patent Cooperation Treaty (PCT). An international (PCT) application generally has the same effect as a regular national patent application in each PCT-member country. The PCT process **simplifies** the filing of patent applications on the same invention in member countries, but **does not result** in a grant of "an international patent" and does not eliminate the need of applicants to file additional documents and fees in countries where patent protection is desired.

Almost every country has its own patent law, and a person desiring a patent in a particular country must make an application for patent in that country in accordance with its particular laws. Since the laws of many countries differ in various respects from the patent law of the United States, applicants are advised to seek guidance from specific foreign countries to ensure that patent rights are not lost prematurely.

Applicants also are advised that in the case of inventions made in the United States, the Director of the USPTO must issue a license before applicants can apply for a patent in a foreign country. The filing of a U.S. patent application serves as a request for a foreign filing license. The application's filing receipt contains further information and guidance as to the status of applicant's license for foreign filing.

Applicants may wish to consult the USPTO booklet, "General Information Concerning Patents" (specifically, the section entitled "Treaties and Foreign Patents") for more information on timeframes and deadlines for filing foreign patent applications. The guide is available either by contacting the USPTO Contact Center at 800-786-9199, or it can be viewed on the USPTO website at http://www.uspto.gov/web/offices/pac/doc/general/index.html.

For information on preventing theft of your intellectual property (patents, trademarks and copyrights), you may wish to consult the U.S. Government website, http://www.stopfakes.gov. Part of a Department of Commerce initiative, this website includes self-help "toolkits" giving innovators guidance on how to protect intellectual property in specific countries such as China, Korea and Mexico. For questions regarding patent enforcement issues, applicants may call the U.S. Government hotline at 1-866-999-HALT (1-866-999-4158).

LICENSE FOR FOREIGN FILING UNDER

Title 35, United States Code, Section 184

Title 37, Code of Federal Regulations, 5.11 & 5.15

GRANTED

The applicant has been granted a license under 35 U.S.C. 184, if the phrase "IF REQUIRED, FOREIGN FILING LICENSE GRANTED" followed by a date appears on this form. Such licenses are issued in all applications where

the conditions for issuance of a license have been met, regardless of whether or not a license may be required as set forth in 37 CFR 5.15. The scope and limitations of this license are set forth in 37 CFR 5.15(a) unless an earlier license has been issued under 37 CFR 5.15(b). The license is subject to revocation upon written notification. The date indicated is the effective date of the license, unless an earlier license of similar scope has been granted under 37 CFR 5.13 or 5.14.

This license is to be retained by the licensee and may be used at any time on or after the effective date thereof unless it is revoked. This license is automatically transferred to any related applications(s) filed under 37 CFR 1.53(d). This license is not retroactive.

The grant of a license does not in any way lessen the responsibility of a licensee for the security of the subject matter as imposed by any Government contract or the provisions of existing laws relating to espionage and the national security or the export of technical data. Licensees should apprise themselves of current regulations especially with respect to certain countries, of other agencies, particularly the Office of Defense Trade Controls, Department of State (with respect to Arms, Munitions and Implements of War (22 CFR 121-128)); the Bureau of Industry and Security, Department of Commerce (15 CFR parts 730-774); the Office of Foreign AssetsControl, Department of Treasury (31 CFR Parts 500+) and the Department of Energy.

NOT GRANTED

No license under 35 U.S.C. 184 has been granted at this time, if the phrase "IF REQUIRED, FOREIGN FILING LICENSE GRANTED" DOES NOT appear on this form. Applicant may still petition for a license under 37 CFR 5.12, if a license is desired before the expiration of 6 months from the filing date of the application. If 6 months has lapsed from the filing date of this application and the licensee has not received any indication of a secrecy order under 35 U.S.C. 181, the licensee may foreign file the application pursuant to 37 CFR 5.15(b).

UNITED STATES PATENT AND TRADEMARK OFFICE

Commissioner for Patents
United States Patent and Trademark Office
P.O. Box 1450
Alexandria, VA 22313-1450
www.uspto.gov

YI ZHENG
1605 Grizzly Lane
Sartell MN 56377

COPY MAILED

DEC 10 2007

OFFICE OF PETITIONS

In re Application of
Yeng et al.
Application No. 10/684,150
Filed: October 9, 2003
Title: Asynchronous Modulation and Demodulation for Spread Spectrum and Code-division Multiple Access Communication

ON PETITION

This is a decision on the petition under 37 CFR 1.181 to withdraw the holding of abandonment, filed October 25, 2007.

The petition to withdraw the holding of abandonment is **Dismissed**.

Any request for reconsideration should be filed within **TWO MONTHS** of the mailing date of this decision in order to be considered timely. 37 CFR 1.181(f). This time period may not be extended pursuant to 37 CFR 1.136.

This application became abandoned for failure to timely submit the issue and publication fee(s), as required by the Notice of Allowance and Fee (s) Due which was mailed June 19, 2007. The Notice of Allowance and Fee (s) Due set a three (3) month statutory period for reply. Extensions of time were not available under the provisions of 37 CFR 1.136(a). Accordingly, this application became abandoned on September 20, 2007. A Notice of Abandonment was mailed on October 17, 2007.

The petition has **not** been reviewed on the merits because the petition provided has not been properly signed.

Pursuant to 37 CFR 1.33, amendments and other papers, except for written assertions pursuant to § 1.27(c)(2)(ii) of this part, filed in the application must be signed by:

(1) A registered attorney or agent of record appointed in compliance with § 1.34(b);

(2) A registered attorney or agent not of record who acts in a representative capacity under the provisions of § 1.34(a);

(3) An assignee as provided for under § 3.71(b) of this chapter; or

(4) All of the applicants (§ 1.41(b)) for patent, unless there is an assignee of the entire interest and such assignee has taken action in the application in accordance with § 3.71 of this chapter.

The petition has not been signed by all of the applicants for patent. The petition has only been executed by inventor Zheng. Inventor Yao must execute the petition on renewed petition.

Further correspondence with respect to this matter should be addressed as follows:

By mail:
Mail Stop Petition
Commissioner for Patents
P.O. Box 1450
Alexandria, VA 22313-1450

By facsimile: (571) 273-8300

By delivery service:
(FedEx, UPS, DHL, etc.)
U.S. Patent and Trademark Office
Customer Window, Mail Stop Petition
Randolph Building
401 Dulany Street
Alexandria, VA 22314

Telephone inquiries concerning this matter should be directed to the undersigned at (571) 272-3215.

Charlema R. Grant

Charlema R. Grant
Petitions Attorney
Office of Petitions

enclosure: Notice of Allowance and Allowability

Notice of Allowability	Application No.	Applicant(s)	
	10/684,150	ZHENG ET AL.	
	Examiner	Art Unit	
	John Pezzlo	2616	

-- The MAILING DATE of this communication appears on the cover sheet with the correspondence address--

All claims being allowable, PROSECUTION ON THE MERITS IS (OR REMAINS) CLOSED in this application. If not included herewith (or previously mailed), a Notice of Allowance (PTOL-85) or other appropriate communication will be mailed in due course. **THIS NOTICE OF ALLOWABILITY IS NOT A GRANT OF PATENT RIGHTS.** This application is subject to withdrawal from issue at the initiative of the Office or upon petition by the applicant. See 37 CFR 1.313 and MPEP 1308.

1. ☒ This communication is responsive to *claims filed 3/4/04*.

2. ☒ The allowed claim(s) is/are *1-15*.

3. ☐ Acknowledgment is made of a claim for foreign priority under 35 U.S.C. § 119(a)-(d) or (f).
   a) ☐ All b) ☐ Some* c) ☐ None of the:
      1. ☐ Certified copies of the priority documents have been received.
      2. ☐ Certified copies of the priority documents have been received in Application No. _____ .
      3. ☐ Copies of the certified copies of the priority documents have been received in this national stage application from the International Bureau (PCT Rule 17.2(a)).

   * Certified copies not received: _____.

Applicant has THREE MONTHS FROM THE "MAILING DATE" of this communication to file a reply complying with the requirements noted below. Failure to timely comply will result in ABANDONMENT of this application.
THIS THREE-MONTH PERIOD IS NOT EXTENDABLE.

4. ☐ A SUBSTITUTE OATH OR DECLARATION must be submitted. Note the attached EXAMINER'S AMENDMENT or NOTICE OF INFORMAL PATENT APPLICATION (PTO-152) which gives reason(s) why the oath or declaration is deficient.

5. ☐ CORRECTED DRAWINGS (as "replacement sheets") must be submitted.
   (a) ☐ including changes required by the Notice of Draftsperson's Patent Drawing Review (PTO-948) attached
      1) ☐ hereto or 2) ☐ to Paper No./Mail Date _____.
   (b) ☐ including changes required by the attached Examiner's Amendment / Comment or in the Office action of Paper No./Mail Date _____.

   Identifying indicia such as the application number (see 37 CFR 1.84(c)) should be written on the drawings in the front (not the back) of each sheet. Replacement sheet(s) should be labeled as such in the header according to 37 CFR 1.121(d).

6. ☐ DEPOSIT OF and/or INFORMATION about the deposit of BIOLOGICAL MATERIAL must be submitted. Note the attached Examiner's comment regarding REQUIREMENT FOR THE DEPOSIT OF BIOLOGICAL MATERIAL.

Attachment(s)

1. ☒ Notice of References Cited (PTO-892)
2. ☐ Notice of Draftperson's Patent Drawing Review (PTO-948)
3. ☐ Information Disclosure Statements (PTO/SB/08), Paper No./Mail Date _____
4. ☐ Examiner's Comment Regarding Requirement for Deposit of Biological Material
5. ☐ Notice of Informal Patent Application
6. ☐ Interview Summary (PTO-413), Paper No./Mail Date _____ .
7. ☒ Examiner's Amendment/Comment
8. ☒ Examiner's Statement of Reasons for Allowance
9. ☒ Other *See Continuation Sheet*.

JOHN PEZZLO
PRIMARY EXAMINER

Continuation of Attachment(s) 9. Other: Drawings filed 10/9/03 are accepted by the examiner.

DETAILED ACTION

Examiner's Amendment

An examiner's amendment to the record appears below. Should the changes and/or additions be unacceptable to applicant, an amendment may be filed as provided by 37 CFR 1.312. To ensure consideration of such an amendment, it MUST be submitted no later than the payment of the issue fee.

Authorization for this examiner's amendment was given in a telephone interview with Yi Zheng on 4 May 2007.

The claims have been amended as follows:

1. Claim 1, line 4, changed the period "." to a comma --,--.
2. Claim 1, line 11, changed "dispreading" to -- despreading --.
3. Claim 2, line 4, changed the period "." to a comma --,--.
4. Claim 2, line 5, changed the period "." to a comma --,--.
5. Claim 3, line 2, line 4, changed ". Said" to --, said --.
6. Claim 3, line 3, changed "can comprise" to -- comprises --.
7. Claim 4, line 2, changed ". Said" to --, said --.
8. Claim 4, line 3, changed "can comprise" to -- comprises --.
9. Claim 5, line 2, changed the period "." to a comma --,--.
10. Claim 5, line 3, changed "can comprise" to -- comprises --.

11. Claim 5, line 4, changed the period "." to a comma --,--.

12. Claim 6, line 1, changed "said mean remover" to -- a mean remover --.

13. Claim 6, line 2, changed "it" to -- said mean remover --.

14. Claim 7, line 1, changed "can further include" to -- includes --.

15. Claim 8, line 12, changed "dispreading" to -- despreading --.

16. Claim 9, line 2, changed "it multiplys" to -- said special PN code is multiplied --.

17. Claim 10, line 2, changed ". It can comprise" to -- , said asynchronous demodulator comprises --.

18. Claim 11, line 3, changed ". It can comprise" to -- , said asynchronous demodulator comprises --.

19. Claim 12, line 2, changed the period "." to a comma --,--.

20. Claim 12, line 2, changed "It can comprise" to -- said asynchronous demodulator comprises --.

21. Claim 13, line 1, changed "said mean remover" to -- a mean remover --.

22. Claim 13, line 2, changed "it" to -- said mean remover --.

23. Claim 14, line 1, deleted "can further".

24. Claim 15, line 2, changed ". Said method construct" to --, construct --.

25. Claim 15, line 3, changed "dispreading" to -- despreading --.

26. Claim 15, line 3, changed ". Said method" to -- , method --.

27. Claim 15, line 7, changed the period "." to a comma --,--.

28. Claim 15, line 8, changed "dispreading" to -- despreading --.

29. Claim 15, line 9, inserted between "between" and "one" -- the number --.

Allowable Subject Matter

Claims 1-15 are allowable over the prior art of record.

Reasons for Allowance

The following is an examiner's statement of reasons for allowance: Applicants have claimed uniquely distinct features in the instant invention, which are not found in the prior art, either singularly or in combination. The independent claim identifies the following uniquely distinct features:

1. Regarding claim 1 - A method to asynchronously demodulate CDMA signal for multiple access applications comprising: a. Coding transmitting signal by selecting special PN codes from all available PN codes, b. Coding CDMA signal by bipolar code in a transmitter, c. Transmitting carry modulated CDMA bipolar signals at a carry radio frequency that does not have to be exactly the same as different transmitters, d. Asynchronous demodulation to remove the carry frequency and convert the bipolar CDMA to on-off CDMA signals in a receiver, e. Converting the on-off CDMA signals to polar CDMA signals in the receiver, f. Detecting signal from a desired transmitter by despreading the CDMA signals in the receiver and minimizing MAI in a receiver.

2. Regarding claim 8 - An apparatus to asynchronously demodulate CDMA for multiple access applications, comprising: a. A CDMA coder to code transmitting signal by a special PN code in a transmitter, b. A bipolar (pseudoternary) coder to code the polar CDMA signal in said transmitter of a CDMA multiple access communication system, c. Multiple transmitters transmit CDMA modulated signals at a carry radio frequency that does not have to be exactly the same as different transmitters, d. An asynchronous demodulator removes the carry frequency and convert the bipolar CDMA to on-off CDMA signals, e. A mean remover to converts the on-off CDMA signals to polar CDMA signals in the receiver, f. A detector to detect signal from a desired transmitter by despreading the CDMA signals in the receiver.

3. Regarding claim 15 - A method to cancel the multi-access interference (MAI) when the number of transmitters is limited, construct a new despreading code for the CDMA dispreading for a desired transmitter, method comprises: a. Forming all possible products of PN codes of transmitters except the desire transmitter, b. Obtained a summed code by summing said products having odd number of said PN codes and subtracting said products having even number of said PN codes, c. Obtained said new dispreading code by multiplying the PN code of said desired transmitter with the difference between one and said summed code.

The closest prior art, either singularly or in combination, fail to anticipate or render the above limitations obvious.

Any comments considered necessary by applicant must be submitted no later than the payment of the issue fee and, to avoid processing delays, should preferably accompany the issue fee. Such submissions should be clearly labeled "Comments on Statement of Reasons for Allowance."

Conclusion

Claims 1-15 being allowable, **Prosecution On The Merits Is Closed** in this application.

The prior art made of record and not relied upon is considered pertinent to applicant's disclosure.

1. Ross (US 5,692,006) discloses an adaptive despreasder.

Any inquiry concerning this communication or earlier communications from the examiner should be directed to John Pezzlo whose telephone number is (571) 272-3090. The examiner can normally be reached on Monday to Friday from 8:30 AM to 4:30 PM.

If attempts to reach the examiner by telephone are unsuccessful, the examiner's supervisor, Wellington Chin, can be reached on (571) 272-3134. The fax phone number for the organization where this application or proceeding is assigned is (571) 273-8300.

Any inquiry of a general nature or relating to the status of this application or proceeding should be directed to the receptionist whose telephone number is (571) 272-2600.

Any response to this action should be mailed to:

Commissioner of Patents and Trademarks

Washington, D.C.

or faxed to:

(571) 273-8300

For informal or draft communications, please label "PROPOSED" or "DRAFT"

Hand delivered responses should be brought to:

Jefferson Building

2A15

500 Dulany Street

Alexandria, VA, 22313.

John Pezzlo

6 May 2007

JOHN PEZZLO
PRIMARY EXAMINER

UNITED STATES PATENT AND TRADEMARK OFFICE

UNITED STATES DEPARTMENT OF COMMERCE
United States Patent and Trademark Office
Address: COMMISSIONER FOR PATENTS
P.O. Box 1450
Alexandria, Virginia 22313-1450
www.uspto.gov

NOTICE OF ALLOWANCE AND FEE(S) DUE

7590 06/19/2007

YI ZHENG
1605 Grizzly Lane
Sartell, MN 56377

EXAMINER	
PEZZLO, JOHN	
ART UNIT	PAPER NUMBER
2616	

DATE MAILED: 06/19/2007

APPLICATION NO.	FILING DATE	FIRST NAMED INVENTOR	ATTORNEY DOCKET NO.	CONFIRMATION NO.
10/684,150	10/09/2003	Yi Zheng		2309

TITLE OF INVENTION: ASYNCHRONOUS MODULATION AND DEMODULATION FOR SPREAD SPECTRUM AND CODE-DIVISION MULTIPLE ACCESS COMMUNICATION

APPLN. TYPE	SMALL ENTITY	ISSUE FEE DUE	PUBLICATION FEE DUE	PREV. PAID ISSUE FEE	TOTAL FEE(S) DUE	DATE DUE
nonprovisional	YES	$700	$300	$0	$1000	09/19/2007

THE APPLICATION IDENTIFIED ABOVE HAS BEEN EXAMINED AND IS ALLOWED FOR ISSUANCE AS A PATENT. PROSECUTION ON THE MERITS IS CLOSED. THIS NOTICE OF ALLOWANCE IS NOT A GRANT OF PATENT RIGHTS. THIS APPLICATION IS SUBJECT TO WITHDRAWAL FROM ISSUE AT THE INITIATIVE OF THE OFFICE OR UPON PETITION BY THE APPLICANT. SEE 37 CFR 1.313 AND MPEP 1308.

THE ISSUE FEE AND PUBLICATION FEE (IF REQUIRED) MUST BE PAID WITHIN THREE MONTHS FROM THE MAILING DATE OF THIS NOTICE OR THIS APPLICATION SHALL BE REGARDED AS ABANDONED. THIS STATUTORY PERIOD CANNOT BE EXTENDED. SEE 35 U.S.C. 151. THE ISSUE FEE DUE INDICATED ABOVE DOES NOT REFLECT A CREDIT FOR ANY PREVIOUSLY PAID ISSUE FEE IN THIS APPLICATION. IF AN ISSUE FEE HAS PREVIOUSLY BEEN PAID IN THIS APPLICATION (AS SHOWN ABOVE), THE RETURN OF PART B OF THIS FORM WILL BE CONSIDERED A REQUEST TO REAPPLY THE PREVIOUSLY PAID ISSUE FEE TOWARD THE ISSUE FEE NOW DUE.

HOW TO REPLY TO THIS NOTICE:

I. Review the SMALL ENTITY status shown above.

If the SMALL ENTITY is shown as YES, verify your current SMALL ENTITY status:

A. If the status is the same, pay the TOTAL FEE(S) DUE shown above.

B. If the status above is to be removed, check box 5b on Part B - Fee(s) Transmittal and pay the PUBLICATION FEE (if required) and twice the amount of the ISSUE FEE shown above, or

If the SMALL ENTITY is shown as NO:

A. Pay TOTAL FEE(S) DUE shown above, or

B. If applicant claimed SMALL ENTITY status before, or is now claiming SMALL ENTITY status, check box 5a on Part B - Fee(s) Transmittal and pay the PUBLICATION FEE (if required) and 1/2 the ISSUE FEE shown above.

II. PART B - FEE(S) TRANSMITTAL, or its equivalent, must be completed and returned to the United States Patent and Trademark Office (USPTO) with your ISSUE FEE and PUBLICATION FEE (if required). If you are charging the fee(s) to your deposit account, section "4b" of Part B - Fee(s) Transmittal should be completed and an extra copy of the form should be submitted. If an equivalent of Part B is filed, a request to reapply a previously paid issue fee must be clearly made, and delays in processing may occur due to the difficulty in recognizing the paper as an equivalent of Part B.

III. All communications regarding this application must give the application number. Please direct all communications prior to issuance to Mail Stop ISSUE FEE unless advised to the contrary.

IMPORTANT REMINDER: Utility patents issuing on applications filed on or after Dec. 12, 1980 may require payment of maintenance fees. It is patentee's responsibility to ensure timely payment of maintenance fees when due.

PTOL-85 (Rev. 07/06) Approved for use through 06/30/2007.

PART B - FEE(S) TRANSMITTAL

Complete and send this form, together with applicable fee(s), to: Mail Mail Stop ISSUE FEE
Commissioner for Patents
P.O. Box 1450
Alexandria, Virginia 22313-1450
or Fax (571)-273-2885

INSTRUCTIONS: This form should be used for transmitting the ISSUE FEE and PUBLICATION FEE (if required). Blocks 1 through 5 should be completed where appropriate. All further correspondence including the Patent, advance orders and notification of maintenance fees will be mailed to the current correspondence address as indicated unless corrected below or directed otherwise in Block 1, by (a) specifying a new correspondence address; and/or (b) indicating a separate "FEE ADDRESS" for maintenance fee notifications.

CURRENT CORRESPONDENCE ADDRESS (Note: Use Block 1 for any change of address)

7590 06/19/2007

YI ZHENG
1605 Grizzly Lane
Sartell, MN 56377

Note: A certificate of mailing can only be used for domestic mailings of the Fee(s) Transmittal. This certificate cannot be used for any other accompanying papers. Each additional paper, such as an assignment or formal drawing, must have its own certificate of mailing or transmission.

Certificate of Mailing or Transmission
I hereby certify that this Fee(s) Transmittal is being deposited with the United States Postal Service with sufficient postage for first class mail in an envelope addressed to the Mail Stop ISSUE FEE address above, or being facsimile transmitted to the USPTO (571) 273-2885, on the date indicated below.

(Depositor's name)
(Signature)
(Date)

APPLICATION NO.	FILING DATE	FIRST NAMED INVENTOR	ATTORNEY DOCKET NO.	CONFIRMATION NO.
10/684,150	10/09/2003	Yi Zheng		2309

TITLE OF INVENTION: ASYNCHRONOUS MODULATION AND DEMODULATION FOR SPREAD SPECTRUM AND CODE-DIVISION MULTIPLE ACCESS COMMUNICATION

APPLN. TYPE	SMALL ENTITY	ISSUE FEE DUE	PUBLICATION FEE DUE	PREV. PAID ISSUE FEE	TOTAL FEE(S) DUE	DATE DUE
nonprovisional	YES	$700	$300	$0	$1000	09/19/2007

EXAMINER	ART UNIT	CLASS-SUBCLASS
PEZZLO, JOHN	2616	370-335000

1. Change of correspondence address or indication of "Fee Address" (37 CFR 1.363).
☐ Change of correspondence address (or Change of Correspondence Address form PTO/SB/122) attached.
☐ "Fee Address" indication (or "Fee Address" Indication form PTO/SB/47; Rev 03-02 or more recent) attached. **Use of a Customer Number is required.**

2. For printing on the patent front page, list
(1) the names of up to 3 registered patent attorneys or agents OR, alternatively, 1 _____
(2) the name of a single firm (having as a member a registered attorney or agent) and the names of up to 2 registered patent attorneys or agents. If no name is listed, no name will be printed. 2 _____ 3 _____

3. ASSIGNEE NAME AND RESIDENCE DATA TO BE PRINTED ON THE PATENT (print or type)

PLEASE NOTE: Unless an assignee is identified below, no assignee data will appear on the patent. If an assignee is identified below, the document has been filed for recordation as set forth in 37 CFR 3.11. Completion of this form is NOT a substitute for filing an assignment.

(A) NAME OF ASSIGNEE (B) RESIDENCE: (CITY and STATE OR COUNTRY)

Please check the appropriate assignee category or categories (will not be printed on the patent) : ☐ Individual ☐ Corporation or other private group entity ☐ Government

4a. The following fee(s) are submitted:
☐ Issue Fee
☐ Publication Fee (No small entity discount permitted)
☐ Advance Order - # of Copies _____

4b. Payment of Fee(s): **(Please first reapply any previously paid issue fee shown above)**
☐ A check is enclosed.
☐ Payment by credit card. Form PTO-2038 is attached.
☐ The Director is hereby authorized to charge the required fee(s), any deficiency, or credit any overpayment, to Deposit Account Number _____ (enclose an extra copy of this form).

5. **Change in Entity Status** (from status indicated above)
☐ a. Applicant claims SMALL ENTITY status. See 37 CFR 1.27. ☐ b. Applicant is no longer claiming SMALL ENTITY status. See 37 CFR 1.27(g)(2).

NOTE: The Issue Fee and Publication Fee (if required) will not be accepted from anyone other than the applicant; a registered attorney or agent; or the assignee or other party in interest as shown by the records of the United States Patent and Trademark Office.

Authorized Signature _____ Date _____

Typed or printed name _____ Registration No. _____

This collection of information is required by 37 CFR 1.311. The information is required to obtain or retain a benefit by the public which is to file (and by the USPTO to process) an application. Confidentiality is governed by 35 U.S.C. 122 and 37 CFR 1.14. This collection is estimated to take 12 minutes to complete, including gathering, preparing, and submitting the completed application form to the USPTO. Time will vary depending upon the individual case. Any comments on the amount of time you require to complete this form and/or suggestions for reducing this burden, should be sent to the Chief Information Officer, U.S. Patent and Trademark Office, U.S. Department of Commerce, P.O. Box 1450, Alexandria, Virginia 22313-1450. DO NOT SEND FEES OR COMPLETED FORMS TO THIS ADDRESS. SEND TO: Commissioner for Patents, P.O. Box 1450 Alexandria, Virginia 22313-1450.

Under the Paperwork Reduction Act of 1995, no persons are required to respond to a collection of information unless it displays a valid OMB control number.

UNITED STATES PATENT AND TRADEMARK OFFICE

UNITED STATES DEPARTMENT OF COMMERCE
United States Patent and Trademark Office
Address: COMMISSIONER FOR PATENTS
P.O. Box 1450
Alexandria, Virginia 22313-1450
www.uspto.gov

APPLICATION NO.	FILING DATE	FIRST NAMED INVENTOR	ATTORNEY DOCKET NO.	CONFIRMATION NO.
10/684,150	10/09/2003	Yi Zheng		2309

7590 06/19/2007

YI ZHENG
1605 Grizzly Lane
Sartell, MN 56377

EXAMINER	
PEZZLO, JOHN	
ART UNIT	PAPER NUMBER
2616	

DATE MAILED: 06/19/2007

Determination of Patent Term Adjustment under 35 U.S.C. 154 (b)

(application filed on or after May 29, 2000)

The Patent Term Adjustment to date is 922 day(s). If the issue fee is paid on the date that is three months after the mailing date of this notice and the patent issues on the Tuesday before the date that is 28 weeks (six and a half months) after the mailing date of this notice, the Patent Term Adjustment will be 922 day(s).

If a Continued Prosecution Application (CPA) was filed in the above-identified application, the filing date that determines Patent Term Adjustment is the filing date of the most recent CPA.

Applicant will be able to obtain more detailed information by accessing the Patent Application Information Retrieval (PAIR) WEB site (http://pair.uspto.gov).

Any questions regarding the Patent Term Extension or Adjustment determination should be directed to the Office of Patent Legal Administration at (571)-272-7702. Questions relating to issue and publication fee payments should be directed to the Customer Service Center of the Office of Patent Publication at 1-(888)-786-0101 or (571)-272-4200.

PTOL-85 (Rev. 07/06) Approved for use through 06/30/2007.

UNITED STATES PATENT AND TRADEMARK OFFICE

Commissioner for Patents
United States Patent and Trademark Office
P.O. Box 1450
Alexandria, VA 22313-1450
www.uspto.gov

YI ZHENG
13905 Hummingbird Lane
Cold Spring MN 56320

COPY MAILED

MAR 0 4 2008

In re Application of :
Zheng et al. :
Application No. 10/684,150 : ON PETITION
Filed: October 9, 2003 :
Title: ASYNCHRONOUS MODULATION :
AND DEMODULATION FOR SPREAD :
SPECTRUM AND CODE-DIVISION :
MULTIPLE ACCESS COMMUNICATION :

This is in response to the petition, filed December 26, 2007, to revive the above-identified application, which is being treated as a petition to withdraw the holding of abandonment.

The petition is **DISMISSED**.

Any request for reconsideration of this decision should be submitted within two (2) months from the mail date of this decision and be entitled "Renewed Petition to Withdraw the Holding of Abandonment under 37 CFR 1.181." *See* 37 CFR 1.181(f).

On June 19, 2007, the Office mailed a Notice of Allowance and Notice of Allowability, which set a three month statutory period to reply. The application became abandoned on September 20, 2007, for failure to submit a timely response to the Notice of Allowance. On October 17, 2007, the Office mailed a Notice of Abandonment.

In the present petition, petitioner requests that the Office withdraw the holding of abandonment due to nonreceipt of the Notice of Allowance. Specifically, petitioner states that the Notice of Allowance was not received prior to the mailing of the Notice of Abandonment. Petitioners state if the Notice of Allowance had been received they would have paid the issue fee.

DISCUSSION OF PETITION TO WITHDRAW THE HOLDING OF ABANDONMENT

A review of the record indicates no irregularity in the mailing of the Notice of Allowance, and in the absence of any irregularity in the mailing, there is a strong presumption that the Notice of Allowance was properly mailed to the address of record.

As petitioner is a pro-se applicant, the Office understands that petitioner may not keep a formal docket record system for his correspondence. Nevertheless, petitioner must provide some sort of

showing explaining the manner in which petitioner receives mail from the USPTO, maintains files for patent matters, and treats mail received for such matter. Specifically, petitioner must explain the system for keeping track of patent matters - where petitioner keeps the correspondence; where he writes down due dates; how he knows replies are due, etc. In essence, petitioner must explain how he reminds himself of response due dates and show that the due date for the Notice of Allowance of September 19, 2007, was not entered into that system. Petitioner should include any available documentary evidence of the mail received, covering a reasonable period after June 19, 2007, to demonstrate nonreceipt of the June 19, 2007 Office action. Petitioner should also provide the USPTO with copies of any records or other methods, which could serve as a reminder of the due date for a response to an Office action, and where petitioner would have entered the receipt date of the Office action had petitioner received it (for example, a copy of the outside of a file or a calendar maintained by petitioner), if these documents are available. Furthermore, petitioner must include a statement from himself, or any other person at the address who may have handled the Office action, indicating that a search was conducted of the location where the correspondence from the USPTO would have been kept; however, the June 19, 2007 Notice of Allowance was not found. Lastly, petitioner must state that he was, in fact, residing at the correspondence address of record for a reasonable time after June 19, 2007; the period when he would have received the June 19, 2007 Notice of Allowance.

In the present petition, petitioner did not submit any statements, documentary evidence, or an explanation of his method for tracking due dates for filing responses to communications from the USPTO to show he did not receive the June 19, 2007 Notice of Allowance. Therefore, the petition to withdraw the holding of abandonment is **dismissed**.

On renewed petition, it is noted petitioner submitted the $300.00 publication fee and $700.00 towards the issue fee. However, effective September 30, 2007 the issue fee was increased to $720.00. As such, petitioner will need to provide an additional $20.00.

ALTERNATIVE VENUE

Petitioner is strongly encouraged to consider filing a petition under 37 CFR 1.137(b) to revive an unintentionally abandoned application instead of filing a renewed petition under 37 CFR 1.181 or a petition under 37 CFR 1.137(a).

A grantable petition pursuant to 37 CFR 1.137(b) must be accompanied by:

(1) The reply required to the outstanding Office action or notice, unless previously filed.

(2) The petition fee as set forth in 37 CFR 1.17(m), **$770.00 for a small entity**;

(3) A statement that the entire delay in filing the required reply from the due date for the reply until the filing of a grantable petition was unintentional. The Director may require additional information where there is a question whether the delay was unintentional.

A form for filing a petition to revive an unintentionally abandoned application accompanies this decision for petitioner's convenience. If petitioner desires to file a petition under 37 CFR 1.137(b) instead of filing a request for reconsideration, petitioner must complete the enclosed petition form (PTO/SB/64) and pay the $770.00 petition fee.

Petitioner may wish to consider hiring a registered patent attorney or agent to assist in the prosecution of this application. Additionally, petitioner is encouraged to contact the Inventors Assistance Center (IAC) by telephone at 800-786-9199 or 571-272-1000, Monday through Friday from 8:30 AM to 5:30 PM (EST). The IAC provides patent information and services to the public and is staffed by former Supervisory Patent Examiners and experienced Primary Examiners who answer general questions concerning patent examining policy and procedure.

Further correspondence with respect to this matter should be addressed as follows:

By mail: Mail Stop Petition
Commissioner for Patents
P.O. Box 1450
Alexandria, VA 22313-1450

By FAX: (571) 273-8300
Attn: Office of Petitions

By hand: Customer Service Window
Randolph Building
401 Dulany Street
Alexandria, VA 22314

Telephone inquiries related to this decision may be directed to the undersigned at (571) 272-3215.

Charlema Grant
Petitions Attorney
Office of Petitions

Enclosures: Petition For Revival Of An Application For Patent Abandoned Unintentionally Under 37 CFR 1.137(b) and Form PTO/SB/64, Privacy Act Statement.

PTO/SB/64 (01-08)
Approved for use through 03/31/2008. OMB 0651-0031
U.S. Patent and Trademark Office; U.S. DEPARTMENT OF COMMERCE
Under the Paperwork Reduction Act of 1995, no persons are required to respond to a collection of information unless it displays a valid OMB control number.

PETITION FOR REVIVAL OF AN APPLICATION FOR PATENT ABANDONED UNINTENTIONALLY UNDER 37 CFR 1.137(b)

Docket Number (Optional)

First named inventor:

Application No.: Art Unit:

Filed: Examiner:

Title:

Attention: Office of Petitions
Mail Stop Petition
Commissioner for Patents
P.O. Box 1450
Alexandria, VA 22313-1450
FAX (571) 273-8300

NOTE: If information or assistance is needed in completing this form, please contact Petitions Information at (571) 272-3282.

The above-identified application became abandoned for failure to file a timely and proper reply to a notice or action by the United States Patent and Trademark Office. The date of abandonment is the day after the expiration date of the period set for reply in the office notice or action plus an extensions of time actually obtained.

APPLICANT HEREBY PETITIONS FOR REVIVAL OF THIS APPLICATION

NOTE: A grantable petition requires the following items:
(1) Petition fee;
(2) Reply and/or issue fee;
(3) Terminal disclaimer with disclaimer fee - required for all utility and plant applications filed before June 8, 1995; and for all design applications; and
(4) Statement that the entire delay was unintentional.

1.Petition fee

☐ Small entity-fee $ _____ (37 CFR 1.17(m)). Applicant claims small entity status. See 37 CFR 1.27.

☐ Other than small entity – fee $ _____ (37 CFR 1.17(m))

2. Reply and/or fee

A. The reply and/or fee to the above-noted Office action in the form of _____(identify type of reply):

☐ has been filed previously on _____.
☐ is enclosed herewith.

B. The issue fee and publication fee (if applicable) of $ _____.

☐ has been paid previously on _____.
☐ is enclosed herewith.

This collection of information is required by 37 CFR 1.137(b). The information is required to obtain or retain a benefit by the public which is to file (and by the USPTO to process) an application. Confidentiality is governed by 35 U.S.C. 122 and 37 CFR 1.11 and 1.14. This collection is estimated to take 1.0 hour to complete, including gathering, preparing, and submitting the completed application form to the USPTO. Time will vary depending upon the individual case. Any comments on the amount of time you require to complete this form and/or suggestions for reducing this burden, should be sent to the Chief Information Officer, U.S. Patent and Trademark Office, U.S. Department of Commerce, P.O. Box 1450, Alexandria, VA 22313-1450. DO NOT SEND FEES OR COMPLETED FORMS TO THIS ADDRESS. **SEND TO: Mail Stop Petition, Commissioner for Patents, P.O. Box 1450, Alexandria, VA 22313-1450.**

If you need assistance in completing the form, call 1-800-PTO-9199 and select option 2.

3. Terminal disclaimer with disclaimer fee

☐ Since this utility/plant application was filed on or after June 8, 1995, no terminal disclaimer is required.

☐ A terminal disclaimer (and disclaimer fee (37 CFR 1.20(d)) of $ _____ for a small entity or $ _____ for other than a small entity) disclaiming the required period of time is enclosed herewith (see PTO/SB/63).

4. STATEMENT: The entire delay in filing the required reply from the due date for the required reply until the filing of a grantable petition under 37 CFR 1.137(b) was unintentional. [NOTE: The United States Patent and Trademark Office may require additional information if there is a question as to whether either the abandonment or the delay in filing a petition under 37 CFR 1.137(b) was unintentional (MPEP 711.03(c), subsections (III)(C) and (D)).]

WARNING:

Petitioner/applicant is cautioned to avoid submitting personal information in documents filed in a patent application that may contribute to identity theft. Personal information such as social security numbers, bank account numbers, or credit card numbers (other than a check or credit card authorization form PTO-2038 submitted for payment purposes) is never required by the USPTO to support a petition or an application. If this type of personal information is included in documents submitted to the USPTO, petitioners/applicants should consider redacting such personal information from the documents before submitting them to the USPTO. Petitioner/applicant is advised that the record of a patent application is available to the public after publication of the application (unless a non-publication request in compliance with 37 CFR 1.213(a) is made in the application) or issuance of a patent. Furthermore, the record from an abandoned application may also be available to the public if the application is referenced in a published application or an issued patent (see 37 CFR 1.14). Checks and credit card authorization forms PTO-2038 submitted for payment purposes are not retained in the application file and therefore are not publicly available.

_____ Signature

_____ Date

_____ Typed or printed name

_____ Registration Number, if applicable

_____ Address

_____ Telephone Number

_____ Address

Enclosures:
☐ Fee Payment
☐ Reply
☐ Terminal Disclaimer Form
☐ Additional sheets containing statements establishing unintentional delay
☐ Other: _____

CERTIFICATE OF MAILING OR TRANSMISSION [37 CFR 1.8(a)]

I hereby certify that this correspondence is being:

☐ Deposited with the United States Postal Service on the date shown below with sufficient postage as first class mail in an envelope addressed to: Mail Stop Petition, Commissioner for Patents, P. O. Box 1450, Alexandria, VA 22313-1450.

☐ Transmitted by facsimile on the date shown below to the United States Patent and Trademark Office at (571) 273-8300.

_____ Date

_____ Signature

_____ Typed or printed name of person signing certificate

Privacy Act Statement

The **Privacy Act of 1974 (P.L. 93-579)** requires that you be given certain information in connection with your submission of the attached form related to a patent application or patent. Accordingly, pursuant to the requirements of the Act, please be advised that: (1) the general authority for the collection of this information is 35 U.S.C. 2(b)(2); (2) furnishing of the information solicited is voluntary; and (3) the principal purpose for which the information is used by the U.S. Patent and Trademark Office is to process and/or examine your submission related to a patent application or patent. If you do not furnish the requested information, the U.S. Patent and Trademark Office may not be able to process and/or examine your submission, which may result in termination of proceedings or abandonment of the application or expiration of the patent.

The information provided by you in this form will be subject to the following routine uses:

1. The information on this form will be treated confidentially to the extent allowed under the Freedom of Information Act (5 U.S.C. 552) and the Privacy Act (5 U.S.C 552a). Records from this system of records may be disclosed to the Department of Justice to determine whether disclosure of these records is required by the Freedom of Information Act.
2. A record from this system of records may be disclosed, as a routine use, in the course of presenting evidence to a court, magistrate, or administrative tribunal, including disclosures to opposing counsel in the course of settlement negotiations.
3. A record in this system of records may be disclosed, as a routine use, to a Member of Congress submitting a request involving an individual, to whom the record pertains, when the individual has requested assistance from the Member with respect to the subject matter of the record.
4. A record in this system of records may be disclosed, as a routine use, to a contractor of the Agency having need for the information in order to perform a contract. Recipients of information shall be required to comply with the requirements of the Privacy Act of 1974, as amended, pursuant to 5 U.S.C. 552a(m).
5. A record related to an International Application filed under the Patent Cooperation Treaty in this system of records may be disclosed, as a routine use, to the International Bureau of the World Intellectual Property Organization, pursuant to the Patent Cooperation Treaty.
6. A record in this system of records may be disclosed, as a routine use, to another federal agency for purposes of National Security review (35 U.S.C. 181) and for review pursuant to the Atomic Energy Act (42 U.S.C. 218(c)).
7. A record from this system of records may be disclosed, as a routine use, to the Administrator, General Services, or his/her designee, during an inspection of records conducted by GSA as part of that agency's responsibility to recommend improvements in records management practices and programs, under authority of 44 U.S.C. 2904 and 2906. Such disclosure shall be made in accordance with the GSA regulations governing inspection of records for this purpose, and any other relevant (*i.e.*, GSA or Commerce) directive. Such disclosure shall not be used to make determinations about individuals.
8. A record from this system of records may be disclosed, as a routine use, to the public after either publication of the application pursuant to 35 U.S.C. 122(b) or issuance of a patent pursuant to 35 U.S.C. 151. Further, a record may be disclosed, subject to the limitations of 37 CFR 1.14, as a routine use, to the public if the record was filed in an application which became abandoned or in which the proceedings were terminated and which application is referenced by either a published application, an application open to public inspection or an issued patent.
9. A record from this system of records may be disclosed, as a routine use, to a Federal, State, or local law enforcement agency, if the USPTO becomes aware of a violation or potential violation of law or regulation.

UNITED STATES PATENT AND TRADEMARK OFFICE

Commissioner for Patents
United States Patent and Trademark Office
P.O. Box 1450
Alexandria, VA 22313-1450
www.uspto.gov

YI ZHENG
13905 Hummingbird Lane
Cold Spring MN 56320

COPY MAILED

JUN 12 2008

OFFICE OF PETITIONS

In re Application of :
Zheng et al. :
Application No. 10/684,150 : DECISION ON PETITION
Filed: October 9, 2003 :
Title: ASYNCHRONOUS MODULATION :
AND DEMODULATION FOR SPREAD :
SPECTRUM AND CODE-DIVISION :
MULTIPLE ACCESS COMMUNICATION :

This is a decision on the petition under the unintentional provisions of 37 CFR 1.137(b), filed April 7, 2008, to revive the above-identified application.

The petition is **GRANTED**.

This application became abandoned for failure to timely pay the issue and publication fees on or before September 19, 2007, as required by the Notice of Allowance and Fee(s) Due, mailed June 19, 2007. Accordingly, the date of abandonment of this application is September 20, 2007.

The petition satisfies the requirements of 37 CFR 1.137(b) in that petitioner has supplied (1) the reply in the form of payment of the issue fee of $720 and the publication fee of $300, (2) the petition fee of $770; and (3) a proper statement of unintentional delay.

Petitioner has also submitted a statement from Ms. Hu and telephone and cable bills to establish that mail continued to be received at the former address of record through the periods in question. However, the evidence provided is still insufficient to warrant the withdrawal of the holding of abandonment where there was no system in place to track incoming mail. Nonetheless, petitioner has provided sufficient information to warrant the revival of the application.

Telephone inquiries concerning this decision should be directed to undersigned at (571) 272-3215.

This application is being referred to the Office of Data Management for processing into a patent.

Charlema Grant
Petitions Attorney
Office of Petitions

UNITED STATES PATENT AND TRADEMARK OFFICE

Commissioner for Patents
United States Patent and Trademark Office
P.O. Box 1450
Alexandria, VA 22313-1450
www.uspto.gov

HARMAN – BRINKS HOFER CHICAGO
BRINKS HOFER GILSON & LIONE
PO BOX 10395
CHICAGO, IL 60610

MAILED

NOV 13 2009

OFFICE OF PETITIONS

In re Application of
Allan O. Devantier, et al.
Application No. 10/684,152
Filed: October 10, 2003
Attorney Docket No. 11336-434 (P03060US)

DECISION ON PETITION
TO WITHDRAW
FROM RECORD

This is a decision on the Request to Withdraw as attorney or agent of record under 37 C.F.R. § 1.36(b), filed August 25, 2009.

The request is **APPROVED**.

A grantable request to withdraw as attorney/agent of record must be signed by every attorney/agent seeking to withdraw or contain a clear indication that one attorney is signing on behalf of another/others.

The request was signed by Sanders N. Hills on behalf of all attorneys of record who are associated with customer No. 81166. All attorneys/agents associated with the Customer Number 81166 have been withdrawn. Applicant is reminded that there is no attorney of record at this time.

The correspondence address of record has been changed and the new correspondence address is the address indicated below.

There are no pending Office actions at the present time.

Telephone inquiries concerning this decision should be directed to undersigned at 571-272-1642. All other inquiries concerning the examination or status of this application should be directed to the Technology Center.

/AMW/
April M. Wise
Petitions Examiner
Office of Petitions

cc: HARMAN INTERNATIONAL INDUSTRIES, INCORPORATED
C/O ROBERT HALL
8500 BALBOA BOULEVARD
NORTHRIDGE, CA 91329

UNITED STATES PATENT AND TRADEMARK OFFICE

UNITED STATES DEPARTMENT OF COMMERCE
United States Patent and Trademark Office
Address: COMMISSIONER FOR PATENTS
P.O. Box 1450
Alexandria, Virginia 22313-1450
www.uspto.gov

APPLICATION NUMBER	FILING OR 371(C) DATE	FIRST NAMED APPLICANT	ATTY. DOCKET NO./TITLE
10/684,152	10/10/2003	Allan O. Devantier	11336-434 (P03060US)

CONFIRMATION NO. 2307

POWER OF ATTORNEY NOTICE

81166
HARMAN - BRINKS HOFER CHICAGO
Brinks Hofer Gilson & Lione
P.O. Box 10395
Chicago, IL 60610

OC000000038599642

Date Mailed: 11/03/2009

NOTICE REGARDING CHANGE OF POWER OF ATTORNEY

This is in response to the Power of Attorney filed 08/25/2009.

- The withdrawal as attorney in this application has been accepted. Future correspondence will be mailed to the new address of record. 37 CFR 1.33.

/amwise/

Office of Data Management, Application Assistance Unit (571) 272-4000, or (571) 272-4200, or 1-888-786-0101

UNITED STATES PATENT AND TRADEMARK OFFICE

Commissioner for Patents
United States Patent and Trademark Office
P.O. Box 1450
Alexandria, VA 22313-1450
www.uspto.gov

CHIH-CHING HSIEN
235 CHUNG-HO
BOX 8-24
TAIPEI TW TAIWAN

COPY MAILED

FEB 09 2007

OFFICE OF PETITIONS

In re Application of :
Chih-Ching Hsien :
Application No. 10/684,153 : ON PETITION
Filed: October 9, 2003 :
Attorney Docket No. PUSA030933 :

This is a decision on the petition under 37 CFR 1.137(b), filed September 1, 2006, to revive the above-identified application.

The petition is **GRANTED**.

The above-identified application became abandoned for failure to reply in a timely manner to the non-final Office action mailed October 15, 2004, which set a shortened statutory period for reply of three (3) months. No extension of time under the provisions of 37 CFR 1.136(a) were obtained. Accordingly, the above-identified application became abandoned on January 16, 2005.

Telephone inquiries concerning this decision should be directed to Irvin Dingle at (571) 272-3210.

This matter is being referred to Technology Center AU 3723 for further processing.

Irvin Dingle
Petitions Examiner
Office of Petitions

UNITED STATES PATENT AND TRADEMARK OFFICE

Commissioner for Patents
United States Patent and Trademark Office
P.O. Box 1450
Alexandria, VA 22313-1450
www.uspto.gov
DIW 04-05

NIKOLAI & MERSEREAU, P.A.
900 SECOND AVENUE SOUTH
SUITE 820
MINNEAPOLIS MN 55402

COPY MAILED

APR 12 2005

OFFICE OF PETITIONS

In re Application of :
Wen-Cheng Houg :
Application No. 10/684,158 : ON PETITION
Filed: 9 October, 2003 :
Att'y Docket No. PUSA030830 :

This is a decision on the petition under 1.137(b),[1] filed on 10 December, 2004, to revive the above-identified application.

The petition is **GRANTED**.

This application became abandoned on 10 July, 2004, for failure to timely submit the issue and publication fees as required by the Notice of Allowance and Issue Fee Due mailed on 9 April,

---

[1]Effective December 1, 1997, the provisions of 37 CFR 1.137(b) now provide that where the delay in reply was unintentional, a petition may be filed to revive an abandoned application or a lapsed patent pursuant to 37 CFR 1.137(b). A grantable petition filed under the provisions of 37 CFR 1.137(b) must be accompanied by:

(1) the required reply, unless previously filed. In a nonprovisional application abandoned for failure to prosecute, the required reply may be met by the filing of a continuing application. In a nonprovisional application filed on or after June 8, 1995, and abandoned for failure to prosecute, the required reply may also be met by the filing of a request for continued examination in compliance with § 1.114. In an application or patent, abandoned or lapsed for failure to pay the issue fee or any portion thereof, the required reply must be the payment of the issue fee or any outstanding balance thereof. In an application abandoned for failure to pay the publication fee, the required reply must include payment of the publication fee.

(2) the petition fee as set forth in 37 CFR 1.17(m);

(3) a statement that the entire delay in filing the required reply from the due date for the reply until the filing of a grantable petition pursuant to 37 CFR 1.137(b) was unintentional. The Commissioner may required additional information where there is a question whether the delay was unintentional; and

(4) any terminal disclaimer (and fee as set forth in 37 CFR 1.20(d)) required pursuant to 37 CFR 1.137(c)).

2004, which set a three (3) month statutory period for reply. Notice of Abandonment was mailed on 13 August, 2004.

It is not apparent whether the person signing the statement of unintentional delay was in a position to have firsthand or direct knowledge of the facts and circumstances of the delay at issue. Nevertheless, such statement is being treated as having been made as the result of a reasonable inquiry into the facts and circumstances of such delay.[2] In the event that such an inquiry has not been made, petitioner must make such an inquiry. If such inquiry results in the discovery that it is not correct that the entire delay in filing the required reply from the due date for the reply until the filing of a grantable petition pursuant to 37 CFR 1.137(b) was unintentional, petitioner must notify the Office.

The application file is being forwarded to Publishing Division for processing into a patent.

Telephone inquiries concerning this matter may be directed to the undersigned at (571)272-3231.

DWood

Douglas I. Wood
Senior Petitions Attorney
Office of Petitions

[2]See 37 CFR 10.18(b) and Changes to Patent Practice and Procedure; Final Rule Notice, 62 Fed. Reg. 53131, 53178 (October 10, 1997), 1208 Off. Gaz. Pat. Office 63, 103 (October 21, 1997).

UNITED STATES PATENT AND TRADEMARK OFFICE

Commissioner for Patents
United States Patent and Trademark Office
P.O. Box 1450
Alexandria, VA 22313-1450
www.uspto.gov

Alan D. Kamrath
Nikolai & Mersereau, P.A.
Suite 820 International Centre
900 Second Avenue South
Minneapolis MN 55402

COPY MAILED

APR 15 2005

OFFICE OF PETITIONS

In re Patent No. 6,796,871
Issue Date: September 28, 2004
Application No. 10/684,159
Filed: October 9, 2003
Attorney Docket No. 20050054.ORI
For: SWINGABLE TOY

ON PETITION

This is a decision on the petition under 37 CFR 1.182, filed January 17, 2005, requesting issuance of duplicate Letters Patent for the above-identified application due to loss of the original Letters Patent.

The petition is **dismissed**.

Any request for reconsideration must be submitted within TWO (2) MONTHS from the mail date of this decision. The reconsideration request should include a cover letter entitled "Renewed Petition under 37 CFR 1.182." This is **not** final agency action within the meaning of 5 U.S.C. § 704.

President Bush signed the Consolidated Appropriations Act on December 8, 2004. This Act changed many patent fees. The 37 CFR 1.182 petition fee became $400.00. Petitioner only authorized the Office to charge a $130.00 petition fee to deposit account no. 08-1265. The Office will refrain from charging a partial petition fee.

Once the $400.00 petition fee is submitted, the petition will be addressed.

Further correspondence with respect to this matter should be addressed as follows:

By mail: Mail Stop PETITION
Commissioner for Patents
Post Office Box 1450
Alexandria, VA 22313-1450

By hand: U.S. Patent and Trademark Office
Customer Service Window, Mail Stop Petition
Randolph Building
401 Dulany Street
Alexandria, VA 22314

By FAX: (703) 872-9306 – ATTN: Office of Petitions

E. Shirene Willis

E. Shirene Willis
Senior Petitions Attorney
Office of Petitions
Office of the Deputy Commissioner
for Patent Examination Policy

UNITED STATES PATENT AND TRADEMARK OFFICE

Commissioner for Patents
United States Patent and Trademark Office
P.O. Box 1450
Alexandria, VA 22313-1450
www.uspto.gov

Alan D. Kamrath
Nikolai & Mersereau, P.A.
Suite 820 International Centre
900 Second Avenue South
Minneapolis MN 55402

COPY MAILED

AUG 0 2 2005

OFFICE OF PETITIONS

In re Patent No. 6,796,871
Issue Date: September 28, 2004
Application No. 10/684,159
Filed: October 9, 2003
Attorney Docket No. 20050054.ORI
For: SWINGABLE TOY

ON PETITION

This is a decision on the reconsideration petition under 37 CFR 1.182, filed April 29, 2005, requesting issuance of duplicate Letters Patent for the above-identified application due to loss of the original Letters Patent.

The petition is **granted**.

The Publishing Division is directed to issue duplicate Letters Patent.

Any questions concerning this matter may be directed to the undersigned at (571) 272-3230.

A copy of this decision is being forwarded to Publishing Division for issuance of a duplicate Letters Patent. The file is being forwarded to the Files Repository since it is not necessary for issuance of a duplicate Letters Patent.

E. Shirene Willis
Senior Petitions Attorney
Office of Petitions

cc: **Krystal Paige, South Tower, 8th Floor**
Room C-32

UNITED STATES PATENT AND TRADEMARK OFFICE

Commissioner for Patents
United States Patent and Trademark Office
P.O. Box 1450
Alexandria, VA 22313-1450
www.uspto.gov

MAILED

APR 21 2010

OFFICE OF PETITIONS

MARGER JOHNSON & MCCOLLOM, P.C. – INTEL
210 SW MORRISON STREET, SUITE 400
PORTLAND OR 97204

In re Application of
Andrew T. Wilson
Application No. 10/684,167
Filed: October 10, 2003
Attorney Docket No. 5038-293

DECISION ON PETITION

This is a decision on the petition, filed December 28, 2009, which is being treated as a petition under 37 CFR 1.181(a) to Withdraw Holding of Abandonment.

The petition under 37 CFR 1.181(a) is **GRANTED**.

The application was held abandoned for failure to timely reply to the decision by the Board of Patent Appeals and Interference rendered on September 22, 2009.

The petitioner states that a request for rehearing within two months of the date of the original decision of the board (September 22, 2009), was timely submitted on November 23, 2009 (November 22, 2009 being a Sunday). To support this assertion, the petitioner has submitted a copy of the reply, along with a copy of the Electronic Acknowledged Receipt with a date of November 23, 2009. A review of the Office records indicates receipt of the above.

In view of the above, the holding of abandonment is hereby withdrawn and the application restored to pending status.

Telephone inquiries concerning this decision should be directed to the undersigned at (571) 272-3208.

This matter is being referred to Technology Center AU 2832 for appropriate action by the Examiner in the normal course of business on the reply received November 23, 2009.

/KOC/
Karen Creasy
Petitions Examiner
Office of Petitions

UNITED STATES PATENT AND TRADEMARK OFFICE

OFFICE

COPY MAILED

JUL 3 1 2006

Director's Office
Office of Patent Publication

ALEXANDER GERASIMOW
ALLEN-BRADLEY COMPANY
PATENT DEPT., 704P FLOOR 8 T29
1201 SOUTH SECOND STREET
MILWAUKEE, WI 53204

In re Application of :
WILLIAMS, DONALD H, et al. :
Application No. 10/684,180 : **DECISION ON PETITION**
Filed: October 10, 2003 :
Attorney Docket No. REEL:0019--1/YOD 00RE068A:

This is a decision on the Petition To Withdraw Holding Of Abandonment Under 37 CFR 1.181(a), received in the United States Patent & Trademark Office (USPTO) on June 6, 2006.

The petition is **DISMISSED**. Any request for reconsideration of this decision, or as explained below, filing a petition seeking revival under 37 CFR § 1.137, must be filed within TWO MONTHS (2) from the mail date of this decision.

The above-identified application was held abandoned for applicant's failure to timely pay the issue fee and publication fee, as required in the Notice of Allowance and Fee(s) Due, mailed January 6, 2006. The Notice of Abandonment mailed May 11, 2006 indicates that the submitted fee of $0 is insufficient. A balance of $1,700 is due.

The Office acknowledges receipt of Part B – Fee(s) Transmittal on February 27, 2006, authorizing that the Issue Fee and Publication Fee be charged to Deposit Account No.01-0857. Unfortunately, on February 28, 2006, when an attempt was made by the Office of Finance to charge the fee, there was an insufficient fund in the Deposit Account.

37 CFR 1.25 (a) and (b), which states in part:

> 1.25(a) ...An amount sufficient to cover all fee, services, copies, etc., requested must always be on deposit. Charges to accounts with insufficient funds will not be accepted."
>
> 1.25 (b) ...An authorization to charge a fee to a deposit account will not be considered payment of the fee on the date the authorization to charge the fee is effective as to the particular fee to be charged unless sufficient funds are present in the account to cover the fee.

In light of the non-compliance with 37 CFR 1.25, the holding of abandonment cannot be withdrawn.

Applicant may seek relief by filing a petition for Revival of Abandoned Application under CFR § 1.137 (a) or (b). (Forms are available at USPTO website http://www.uspto.gov)

- Under 37 CFR 1.137(a), a petition for the revival of an ***unavoidable*** abandoned application
- Under 37 CFR 1.137(b), a petition for the revival of an ***unintentionally*** abandoned application

Further inquires with respect to filing a petition under 37 CFR § 1.137 may be directed to the Office of Petitions at 571-272-3282 or addressed as follows:

By mail:
Mail Stop Petitions
Commissioner for Patents
Office of Petitions
P O Box 1450
Alexandria, VA 22313-1450

Telephone inquires concerning this decision matter may be directed to the undersigned at 703 308-9250 Ext. 137.

Thomas E. Hawkins
Paralegal Specialist
Office of the Director
Office of Patent Publications

UNITED STATES PATENT AND TRADEMARK OFFICE

OFFICE

COPY MAILED

OCT 16 2006

Director's Office
Office of Patent Publication

ALEXABDER M. GERASIMOW
ALLEN-BRADLEY COMPANY, LLC
1201 SOUTH SECOND STREET
MILWAUKEE, WI 53204-2496

In re Application of :
WILLIAMS, DONALD H. :
Application No. 10/684,180 : **DECISION ON PETITION**
Filed: October 10, 2003 :
Attorney Docket No. REEL:0019--1/YOD 00RE068A :

This is a response to the Request For Reconsideration Of Petition Decision, received in the United States Patent & Trademark Office (USPTO) on October 2, 2006.

Petitioner is requesting reconsideration of the Decision On Petition mailed on July 31, 2006, which DISMISSED the Petition To Withdraw Holding Of Abandonment, received in the USPTO on June 5, 2006 (incorrectly indicated by the undersigned as June 6, 2006).

The decision of July 31, 2006 acknowledges receipt of Part B – Fee(s) Transmittal on February 27, 2006, authorizing that the Issue Fee and Publication Fee be charged to Deposit Account No. 01-0857. Also, that the decision was based on insufficient funds in the Deposit Account to charge the required fees and non-compliance with 37 CFR 1.25 (a) and (b).

Further investigation reveals that the replenishment check from Rockwell Automation did in fact have the attached check stub listing the Deposit Account No. 01-0857. The account number was overlooked by the accounting technician and inadvertently credited to another Deposit Account. After the Deposit Account Branch was notified of this on February 28, 2006 the funds were transferred to the correct account.

Since, the replenishment check was received on February 22, 2006, prior to the date (February 28, 2006) the Office of Finance attempted to charge the fees and if proper processed, the Deposit Account would have had sufficient funds to charge the required fees, the Decision On Petition mailed July 31, 2006 is hereby **VACATED.**

The Petition To Withdraw Holding Of Abandonment Under 37 CFR 1.181(a) is **GRANTED**.

The USPTO apologizes for any inconvenience to the applicant.

A copy of Part B – Fee(s) Transmittal accompanied the Petition received on June 5, 2006. The Issue Fee in the amount of $1,400 and $300 for the Publication Fee were then charged to Deposit Account. No. 01-0857 on June 7, 2006. The fees will be accepted as if timely received on February 27, 2006.

The application will be processed into a patent.

Telephone inquires concerning this decision matter may be directed to the undersigned at 703 308-9250 Ext. 137.

Thomas E. Hawkins
Paralegal Specialist
Office of the Director
Office of Patent Publications

SPE RESPONSE FOR CERTIFICATE OF CORRECTION

Paper No.: X

DATE : November 26,2007

TO SPE OF : ART UNIT 3616

SUBJECT : Request for Certificate of Correction for Appl. No.: 10/684,188 Patent No.: 7178825 B2

A response is requested with respect to a request for a certificate of correction.

With respect to the change(s) requested to correct Office and/or Applicant's errors, should the patent read as shown in the certificate of correction attached herewith or the COCIN document(s), in IFW images for the above-identified patented application? No new matter should be introduced, nor should the scope or meaning of the claims be changed.

If the response is for an IFW, within 7 days, please complete and forward the response, to the employee (named below) via scanning into application images, using document code **COCX**.

DO NOT SENT TO ATTORNEY

If the response is for a paper file wrapper, please complete the response and forward the response with the paper file wrapper, to the employee (named below), within 7 days, to:

Certificates of Correction Branch (CofC)
South Tower - 9A22
Palm Location 7580

You can fax the Directors/SPE response to 571-270-9990

LAMONTE NEWSOME

Certificates of Correction Branch

703-308-9390 ext. 112

Thank You For Your Assistance

The request for issuing the above-identified correction(s) is hereby:

Note your decision on the appropriate box.

☒ **Approved**	**All** changes apply.
☐ **Approved in Part**	Specify below which changes **do not** apply.
☐ **Denied**	State the reasons for denial below.

Comments: _____

PAUL N. DICKSON
SUPERVISORY PATENT EXAMINER
TECHNOLOGY CENTER 3600

3616

UNITED STATES PATENT AND TRADEMARK OFFICE

COMMISSIONER FOR PATENTS
UNITED STATES PATENT AND TRADEMARK OFFICE
P.O. BOX 1450
ALEXANDRIA, VA 22313-1450
www.uspto.gov

COPY MAILED

FEB 01 2005

OFFICE OF PETITIONS

NIXON PEABODY, LLP
401 9TH STREET, NW
SUITE 900
WASHINGTON DC 20004-2128

Applicant: Liu et al.
Application No. 10/684,190
Filed: October 10, 2003
For: ORGANISMS AND METHODOLOGIES EMPLOYING A NOVEL HUMAN PROTEIN KINASE
Attorney Docket No: 031896-008000
Pub. No.: US 2004/0096889 A1
Pub. Date: May 20, 2004

This is a decision on the request for corrected patent application publication under 37 CFR 1.221(b), filed on December 14, 2004, for the above-identified application.

The request is DISMISSED.

The instant request is that the application be republished because the patent application publication includes an error in the Notice of Publication as the title of the invention "Compositions, Organisms and Methodologies Employing a Novel Human Kinase" is misprinted as "Organisms and Methodologies Employing a Novel Human Protein Kinase."

37 CFR 1.221(b) states "Any request for a corrected publication or revised patent application publication other than provided as provided in paragraph (a) of this section must be filed within two months from the date of the patent application publication. This period is not extendable." .[1]

The request for corrected publication received on December 14, 2004, was not timely filed under 37 CFR 1.221(b), and has not been considered because it was not timely filed.

On February 9, 2004, a Filing Receipt was mailed by the USPTO listing the title as "Compositions, Organisms and Methodologies Employing a Novel Human Kinase."

On February 18, 2004, a first request for a Corrected Filing Receipt was submitted requesting that the title be changed to "Organisms and Methodologies Employing a Novel Human Protein Kinase."

---

[1] Changes to Implement Eighteen-Month Publication of Patent Applications, 65 FR 57023, 57038 (Sept. 20, 2000), 1239 Off. Gaz. Pat. Office Notices 63, 75 (Oct. 10, 2000) (final rule).

On March 3, 2004, a second request for a Corrected Filing Receipt was submitted requesting that the title be changed to "Compositions, Organisms and Methodologies Employing a Novel Human Protein Kinase."

On May 4, 2004, a Corrected Filing Receipt was mailed listing the title as, "Organisms and Methodologies Employing a Novel Human Protein Kinase," in response to the first request for a Corrected Filing Receipt.

The title was correctly listed on the first filing receipt mailed by the USPTO. If applicant wants to amend the title, applicant should submit an amendment to the title. It is improper to request a Corrected Filing Receipt, when the title is correctly listed.

With respect to the "Request for Corrected Notice of Publication of Application," the Patent Application Publication US 2004/0096889 was correctly printed with the title (Compositions, Organisms and Methodologies Employing a Novel Human Kinase), as originally filed by applicant and as now requested by applicant's representative. The Notice of Publication of Application was printed with the title submitted in the first request for a Corrected Filing Receipt because it was mailed after the request was processed. The title of the invention was correctly published in the patent application publication because the application was exported to the publisher before applicants request for Corrected Filing Receipt was processed.

Applicant is reminded of his duty to conduct a reasonable inquiry before filing a paper before the Office. See MPEP 410. Responding to multiple requests for Corrected Filing Receipts and meritless request for corrected Notices of Publication of Application is a waste of Office resources.

Applicant's request for a corrected patent application publication on December 14, 2004, may constitute a "failure to engage in reasonable efforts to conclude processing or examination of the application." See 1.704(c). This determination will be made on or after a mailing of a Notice of Allowance.

Any request for reconsideration of this decision, should be addressed as follows:

By mail to: Mail Stop PGPUB
Commissioner for Patents
P.O. Box 1450
Alexandria, VA 22313-1450

By facsimile: (703) 872-9306

Inquires concerning this communication should be directed to Mark Polutta at (571) 272-7709.

Mark O. Polutta
Office of Patent Legal Administration
Office of the Deputy Commissioner
for Patent Examination Policy

Enclosure: Corrected Filing Receipt

UNITED STATES PATENT AND TRADEMARK OFFICE

COMMISSIONER FOR PATENTS
UNITED STATES PATENT AND TRADEMARK OFFICE
P.O. BOX 1450
ALEXANDRIA, VA 22313-1450
www.uspto.gov

DECHERT LLP
P.O. BOX 10004
PALO ALTO, CA 94303

COPY MAILED

NOV 18 2005

OFFICE OF PETITIONS

In re Application of :
Ford : DECISION ON PETITION
Application No. 10/684,203 :
Filed: October 10, 2003 :
Docket No.: MS-788-A :

This is a decision on the petition under 37 CFR 1.137(b), filed October 31, 2005, to revive the above-identified application.

The petition is **GRANTED**.

This application became abandoned June 18, 2005 for failure to timely submit the issue fee in response to the Notice of Allowance and Issue Fee(s) Due ("Notice") mailed March 17, 2005. The Notice set a three month statutory period for reply. Notice of Abandonment was mailed October 2, 2005.

A grantable petition pursuant to 37 C.F.R. § 1.137(b) must be accompanied by: (1) the required reply to the outstanding Office action or notice, unless previously filed; (2) the petition fee as set forth in 37 C.F.R. § 1.17(m); (3) a statement that the entire delay in filing the required reply from the due date for the reply until the filing of a grantable petition pursuant to 37 C.F.R. § 1.137(b) was unintentional; and (4)any terminal disclaimer (and fee set forth in 37 C.F.R. § 1.20(d)) required pursuant to 37 C.F.R. § 1.137(c).

The instant petition has been reviewed and found in compliance with the provisions of 37 CFR 1.137(b). Accordingly, the failure to timely submit a proper reply to the Notice is accepted as having been unintentionally delayed.

This application will be forwarded to the Publications Division for further processing.

Telephone inquiries concerning this matter may be directed to the undersigned at (571) 272-3205.

Alesia M. Brown
Petitions Attorney
Office of Petitions

UNITED STATES PATENT AND TRADEMARK OFFICE

Commissioner for Patents
United States Patent and Trademark Office
P.O. Box 1450
Alexandria, VA 22313-1450
www.uspto.gov

TOWNSEND, TOWNSEND AND CREW, LLP
TWO EMBARCADERO CENTER
8TH FLOOR
SAN FRANCISCO, CALIFORNIA 94111-3834

MAILED

JUL 21 2005

Technology Center 2100

In re Application of: Suzuki et al.
Application No. 10/684, 210
Filed: October 10, 2003
For: METHOD FOR CONTROLLING STORAGE DEVICE CONTROLLER, STORAGE DEVICE CONTROLLER AND PROGRAM

DECISION ON PETITION FOR ACCELERATED EXAMINATION UNDER M.P.E.P.§708.02(VIII)

This is a response to the petition filed May 16, 2005 under 37 C.F.R. 102(d) and M.P.E.P. § 708.02(VIII): Accelerated Examination, to make the above-identified application special.

The Petition is **GRANTED**.

M.P.E.P. § 708.02, Section VIII which sets out the prerequisites for a grantable petition for Accelerated Examination under 37 C.F.R. § 102(d) states in relevant part:

A new application (one which has not received any examination by the examiner) may be granted special status provided that applicant (and this term includes applicant's attorney or agent) complies with each of the following items:

(a) Submits a petition to make special accompanied by the fee set forth in 37 CFR 1.17(h);

(b) Presents all claims directed to a single invention, or if the Office determines that all the claims presented are not obviously directed to a single invention, will make an election without traverse as a prerequisite to the grant of special status;

(c) Submits a statement(s) that a pre-examination search was made, listing the field of search by class and subclass, publication, Chemical Abstracts, foreign patents, etc. The pre-examination search must be directed to the invention as claimed in the application for which special status is requested. A search made by a foreign patent office satisfies this requirement;

(d) Submits one copy each of the references deemed most closely related to the subject matter encompassed by the claims if said references are not already of record; and

(e) Submits a detailed discussion of the references, which discussion points out, with the particularity required by 37 CFR 1.111 (b) and (c), how the claimed subject matter is patentable over the references.

Petition to Make Special **GRANTED** since all of the requirements for special status under MPEP § 708.02(VIII) have been met.

The application file is being forwarded to the Examiner for accelerated examination in accordance with the procedures set forth in M.P.E.P. §708.02, Section VIII. If the application is subsequently allowed, it will be given priority for printing. See M.P.E.P. §1309.

Brian L. Johnson 7/15/05
Special Program Examiner
Technology Center 2100
Computer Architecture, Software and Information Security
571-272-3595

AWK

UNITED STATES PATENT AND TRADEMARK OFFICE

Commissioner for Patents
United States Patent and Trademark Office
P.O. Box 1450
Alexandria, VA 22313-1450
www.uspto.gov

HARMAN – BRINKS HOFER CHICAGO
BRINKS HOFER GILSON & LIONE
PO BOX 10395
CHICAGO, IL 60610

MAILED

NOV 1 3 2009

OFFICE OF PETITIONS

In re Application of :
Allan O. Devantier, et al. :
Application No. 10/684,222 : DECISION ON PETITION
Filed: October 10, 2003 : TO WITHDRAW
Attorney Docket No. 11336-433 (P03059US) : FROM RECORD
:

This is a decision on the Request to Withdraw as attorney or agent of record under 37 C.F.R. § 1.36(b), filed August 28, 2009.

The request is **APPROVED**.

A grantable request to withdraw as attorney/agent of record must be signed by every attorney/agent seeking to withdraw or contain a clear indication that one attorney is signing on behalf of another/others.

The request was signed by Sanders N. Hills on behalf of all attorneys of record who are associated with customer No. 81166. All attorneys/agents associated with the Customer Number 81166 have been withdrawn. Applicant is reminded that there is no attorney of record at this time.

The correspondence address of record has been changed and the new correspondence address is the address indicated below.

There are no pending Office actions at the present time.

Telephone inquiries concerning this decision should be directed to undersigned at 571-272-1642. All other inquiries concerning the examination or status of this application should be directed to the Technology Center.

/AMW/
April M. Wise
Petitions Examiner
Office of Petitions

cc: HARMAN INTERNATIONAL INDUSTRIES, INCORPORATED
C/O ROBERT HALL
8500 BALBOA BOULEVARD
NORTHRIDGE, CA 91329

UNITED STATES PATENT AND TRADEMARK OFFICE

UNITED STATES DEPARTMENT OF COMMERCE
United States Patent and Trademark Office
Address: COMMISSIONER FOR PATENTS
P.O. Box 1450
Alexandria, Virginia 22313-1450
www.uspto.gov

APPLICATION NUMBER	FILING OR 371(C) DATE	FIRST NAMED APPLICANT	ATTY. DOCKET NO./TITLE
10/684,222	10/10/2003	Allan O. Devantier	11336-433 (P03059US)

CONFIRMATION NO. 8660

POWER OF ATTORNEY NOTICE

81166
HARMAN - BRINKS HOFER CHICAGO
Brinks Hofer Gilson & Lione
P.O. Box 10395
Chicago, IL 60610

Date Mailed: 11/04/2009

NOTICE REGARDING CHANGE OF POWER OF ATTORNEY

This is in response to the Power of Attorney filed 08/28/2009.

- The withdrawal as attorney in this application has been accepted. Future correspondence will be mailed to the new address of record. 37 CFR 1.33.

/amwise/

Office of Data Management, Application Assistance Unit (571) 272-4000, or (571) 272-4200, or 1-888-786-0101

UNITED STATES PATENT AND TRADEMARK OFFICE

Commissioner for Patents
United States Patent and Trademark Office
P.O. Box 1450
Alexandria, VA 22313-1450
www.uspto.gov

DORSEY & WHITNEY LLP
INTELLECTUAL PROPERTY DEPARTMENT
SUITE 3400
1420 FIFTH AVENUE
SEATTLE, WA 98101

COPY MAILED

JAN 1 1 2006

OFFICE OF PETITIONS

In re Application of :
Bruce Rutherford et al :
Application No. 10/684,226 : DECISION ON PETITION
Filed: October 10, 2003 : TO WITHDRAW
Attorney Docket No. 32087/1010 : FROM RECORD
:

This is a decision on the Request to Withdraw as attorney or agent of record under 37 C.F.R. § 1.36(b), filed January 9, 2004.

The request is **APPROVED**.

A grantable request to withdraw as attorney/agent of record must be signed by every attorney/agent seeking to withdraw or contain a clear indication that one attorney is signing on behalf of another/others. A request to withdraw will not be approved unless at least 30 (thirty) days would remain between the date of approval and the later of the expiration date of a time to file a response or the expiration date of the maximum time period which can be extended under 37 C.F.R. § 1.136(a).

The request was signed by Mark W. Roberts on behalf of all attorneys of record who are associated with customer No. 27076. Applicant is reminded that there is no attorney of record at this time.

All future correspondence will be directed to the first named inventor Bruce Rutherford at the address indicated below.

There is an outstanding Office action mailed September 8, 2005 that requires a reply from the applicant.

Telephone inquiries concerning this decision should be directed to Irvin Dingle at (571) 272-3210.

Amelia Au
Petitions Examiner
Office of Petitions

cc: Bruce Rutherford
901 1st Avenue N
Seattle, WA 98109

UNITED STATES PATENT AND TRADEMARK OFFICE

Commissioner for Patents
United States Patent and Trademark Office
P.O. Box 1450
Alexandria, VA 22313-1450
www.uspto.gov

MAILED
FROM DIRECTORS OFFICE

MAY 17 2005

TECHNOLOGY CENTER 3600

ROBERT J. JACOBSON PA
650 Brimhall Street South
St Paul, MN 55116-1511

In re application of : **DECISION ON PETITION**
Christ G. Ellis : **TO MAKE SPECIAL**
Application No. 10/684,283 : **(APPLICANT'S AGE)**
Filed: October 11, 2003 :
For: APPARATUS AND METHOD FOR AUTOMATIC VISION ENHANCEMENT IN A TRAFFIC COMPLEX

This is a decision on the petition submitted on October 11, 2003, under 37 CFR 1.102 (c) to make the above-identified application special under the accelerated examination procedure set forth in MPEP 708.02, Section IV: Applicant's Age.

The petition is **GRANTED**.

An application may be accorded special status upon the filing of a petition providing evidence showing that the applicant is at least 65 years old. Such a showing may be provided by evidence such as a birth certificate or a statement from the applicant.

The evidence submitted with the petition is a copy of a birth certificate for Mr. Ellis indicating that he is at least 65 years of age.

The examiner is directed (1) to make an interference search for possible interfering applications, (2) to promptly examine this application out of turn, and (3) if any interfering application is discovered, to examine such application simultaneously and state in the first official letter of such application that it is being taken out of turn because of a possible interference.

Petitioner is advised that this application will continue to be special, throughout its entire prosecution and pendency, including interference or appeal, if any, only if petitioner makes a prompt ***bona fide*** effort, in response to each Office action, to place the application in condition for allowance, even if it is necessary to conduct an interview with the examiner to accomplish this purpose.

SUMMARY: Petition to Make Special **GRANTED**.

Steven N. Meyers
Special Programs Examiner
Patent Technology Center 3600
(571) 272-6611

SNM/pav: 05/09/05

UNITED STATES PATENT AND TRADEMARK OFFICE

UNITED STATES DEPARTMENT OF COMMERCE
United States Patent and Trademark Office
Address: COMMISSIONER FOR PATENTS
P.O. Box 1450
Alexandria, Virginia 22313-1450
www.uspto.gov

APPL NO.	FILING OR 371 (c) DATE	ART UNIT	FIL FEE REC'D	ATTY.DOCKET NO	DRAWINGS	TOT CLMS	IND CLMS
10/684,291	10/09/2003	3712	385	19997-095377	5	8	1

CONFIRMATION NO. 3093

CORRECTED FILING RECEIPT

OC000000011774369

Jay S. Paranjpe
Clark Hill PLC
Suite 3500
500 Woodward Avenue
Detroit, MI 48226-3435

Date Mailed: 02/11/2004

Receipt is acknowledged of this regular Patent Application. It will be considered in its order and you will be notified as to the results of the examination. Be sure to provide the U.S. APPLICATION NUMBER, FILING DATE, NAME OF APPLICANT, and TITLE OF INVENTION when inquiring about this application. Fees transmitted by check or draft are subject to collection. Please verify the accuracy of the data presented on this receipt. **If an error is noted on this Filing Receipt, please write to the Office of Initial Patent Examination's Filing Receipt Corrections, facsimile number 703-746-9195. Please provide a copy of this Filing Receipt with the changes noted thereon. If you received a "Notice to File Missing Parts" for this application, please submit any corrections to this Filing Receipt with your reply to the Notice. When the USPTO processes the reply to the Notice, the USPTO will generate another Filing Receipt incorporating the requested corrections (if appropriate).**

Applicant(s)

Albert A. Andrews, Cleveland, TN;

Domestic Priority data as claimed by applicant

This appln claims benefit of 60/417,315 10/09/2002

Foreign Applications

If Required, Foreign Filing License Granted: 01/06/2004

Projected Publication Date: 05/06/2004

Non-Publication Request: No

Early Publication Request: No

**** SMALL ENTITY ****

Title

Archery bow braided spars

Preliminary Class

LICENSE FOR FOREIGN FILING UNDER
Title 35, United States Code, Section 184
Title 37, Code of Federal Regulations, 5.11 & 5.15

GRANTED

The applicant has been granted a license under 35 U.S.C. 184, if the phrase "IF REQUIRED, FOREIGN FILING LICENSE GRANTED" followed by a date appears on this form. Such licenses are issued in all applications where the conditions for issuance of a license have been met, regardless of whether or not a license may be required as set forth in 37 CFR 5.15. The scope and limitations of this license are set forth in 37 CFR 5.15(a) unless an earlier license has been issued under 37 CFR 5.15(b). The license is subject to revocation upon written notification. The date indicated is the effective date of the license, unless an earlier license of similar scope has been granted under 37 CFR 5.13 or 5.14.

This license is to be retained by the licensee and may be used at any time on or after the effective date thereof unless it is revoked. This license is automatically transferred to any related applications(s) filed under 37 CFR 1.53(d). This license is not retroactive.

The grant of a license does not in any way lessen the responsibility of a licensee for the security of the subject matter as imposed by any Government contract or the provisions of existing laws relating to espionage and the national security or the export of technical data. Licensees should apprise themselves of current regulations especially with respect to certain countries, of other agencies, particularly the Office of Defense Trade Controls, Department of State (with respect to Arms, Munitions and Implements of War (22 CFR 121-128)); the Office of Export Administration, Department of Commerce (15 CFR 370.10 (j)); the Office of Foreign Assets Control, Department of Treasury (31 CFR Parts 500+) and the Department of Energy.

NOT GRANTED

No license under 35 U.S.C. 184 has been granted at this time, if the phrase "IF REQUIRED, FOREIGN FILING LICENSE GRANTED" DOES NOT appear on this form. Applicant may still petition for a license under 37 CFR 5.12, if a license is desired before the expiration of 6 months from the filing date of the application. If 6 months has lapsed from the filing date of this application and the licensee has not received any indication of a secrecy order under 35 U.S.C. 181, the licensee may foreign file the application pursuant to 37 CFR 5.15(b).

UNITED STATES PATENT AND TRADEMARK OFFICE

Commissioner for Patents
United States Patent and Trademark Office
P.O. Box 1450
Alexandria, VA 22313-1450
www.uspto.gov

MORGAN & FINNEGAN LLP
345 PARK AVENUE
NEW YORK, NY 10154-0053

COPY MAILED

APR 3 0 2004

OFFICE OF PETITIONS

In re Application of
Yasuyuki Unno et al.
Application No. 10/684,294
Filed: October 10, 2003
Attorney Docket No. 1232-4756US1

: DECISION GRANTING
: PETITION

This is a decision on the petition filed March 15, 2004 in response to a Notice to File Corrected Application Papers mailed January 12, 2004.

The instant application was filed October 10, 2003 and a filing date was accorded. However, the Notice mailed January 12, 2004, indicated that amongst the application papers submitted, Figure 18 appeared to have been omitted.

Petitioner asserts that the paper containing Figure 18 was amongst the papers filed on October 10, 2003, and submits a "legible" postcard receipt in evidence thereof. While the postcard receipt itemizes the number of drawing sheets versus the number of figures filed, the postcard is identified by the application and acknowledges, inter alia, the number of drawing sheets to be 18 and bears a United States Patent and Trademark Office date-stamp of October 10, 2003. Further, the postcard receipt lacks any notation of non-receipt of any item listed.

In view of the foregoing, the petition is **Granted.**

Notice is also given to the fact that in compliance with 37 CFR 1.84 and 37 CFR 1.121 and the Notice to File Corrected Application Papers, replacement drawings of Figures 5, 7,13 and 14 have also been submitted with the instant petition.

Given the basis for granting the petition, no petition fee is due none will be charged.

This application is being forwarded to the Office of Initial Patent Examination (OIPE) for further processing, using the application papers received in the Office on October 10, 2003 and the one sheet of drawing containing Figure 18 submitted on petition March 15, 2004.

Telephone inquiries regarding this decision should be directed to the undersigned Petitions Attorney at (703) 305-4497.

Patricia Faison-Ball
Senior Petitions Attorney
Office of Petitions

UNITED STATES PATENT AND TRADEMARK OFFICE

COMMISSIONER FOR PATENTS
UNITED STATES PATENT AND TRADEMARK OFFICE
P.O. BOX 1450
ALEXANDRIA, VA 22313-1450
www.uspto.gov

MAY 12 2004

VP
PAPER NO. ___

In re Application of
William Paynter Hanson
Serial Number: 10/684,301
Filed: October 11, 2003
For: INTEGRATED BIOLOGICAL AND CHEMICAL SENSORS

PETITION UNDER
M.P.E.P.708.02 XI

This is in response to the petition filed October 11, 2003, requesting that the above-identified application be granted Special Status under Section 708.02 XI of the MPEP and 37 CFR 1.102(d). The petition fee set forth under 37 CFR 1.17(h) has been paid.

The request for Special Status considered under Section 708.02 XI is granted because criteria under 37 CFR 1.102(d) has been met.

Accordingly the petition is **GRANTED.**

Marian C Knode

Marian C. Knode, Special Programs Examiner
Technology Center 1700
Chemical and Materials Engineering

MARY J. GASKIN
ANNELIN & GASKIN
2170 BUCKTHORNE PL.
SUITE 220
THE WOODLANDS TX 77380

UNITED STATES PATENT AND TRADEMARK OFFICE

COMMISSIONER FOR PATENTS
UNITED STATES PATENT AND TRADEMARK OFFICE
P.O. BOX 1450
ALEXANDRIA, VA 22313-1450
www.uspto.gov

MAILED

APR 06 2004

Office of the Director
Group 3600

Thomas E. Coverstone
Townsend & Townsend & Crew
12730 High Bluff Drive, Suite 400
San Diego, CA 92030

In re application of : **DECISION ON PETITION**
Douglas G. Nelson : **TO MAKE SPECIAL**
Application No. 10/684,316 : **(COUNTER TERRORISM)**
Filed: October 11, 2003
For: ANTI-HIJACKING SYSTEM OPERABLE IN EMERGENCIES TO DEACTIVATE ON-BOARD FLIGHT CONTROLS AND REMOTELY PILOT AIRCRAFT UTILIZING AUTOPILOT

This is in response to the petition filed on October 11, 2003 to make the above-identified application special on the basis of inventions for countering terrorism as set forth in MPEP § 708.02 XI. The delay in deciding this petition is regretted.

The petition is **GRANTED**.

The requirements for granting special status under this section are: (A) a petition to make special accompanied by the fee set forth in 37 CFR 1.17(i); and (B) a statement explaining how the invention contributes to countering terrorism.

Applicant's petition explains that "in response to the on-board activation of a panic button by a flight crew in case of a commercial airline hijacking, on-board flight control by persons on the aircraft is deactivated. Instead, the aircraft is remotely piloted to a secure landing strip, or the aircraft automatically lands itself in accordance with pre-programmed criteria." This is an acceptable explanation of how the invention would act to counter terrorism, in particular the hijacking of an aircraft.

Since all of the requirements for special status under MPEP § 708.02 XI have been met, the petition is **GRANTED**.

The examiner is directed (1) to make an interference search for possible interfering applications, (2) to promptly examine this application out of turn, and (3) if any interfering application is discovered, to examine such application simultaneously and state in the first official letter of such application that it is being taken out of turn because of a possible interference.

Petitioner is advised that this application will continue to be special, throughout its entire prosecution and pendency, including interference or appeal, if any, only if petitioner makes a prompt ***bona fide*** effort, in response to each Office action, to place the application in condition for allowance, even if it is necessary to conduct an interview with the examiner to accomplish this purpose.

SUMMARY: Petition to Make Special **GRANTED**.

Kenneth J. Dorner
Special Programs Examiner
Technology Center 3600
(703) 308-0866

KJD/mjz: 3/30/04

UNITED STATES PATENT AND TRADEMARK OFFICE

UNITED STATES DEPARTMENT OF COMMERCE
United States Patent and Trademark Office
Address: COMMISSIONER FOR PATENTS
P.O. Box 1450
Alexandria, Virginia 22313-1450
www.uspto.gov

APPL NO.	FILING OR 371 (c) DATE	ART UNIT	FIL FEE REC'D	ATTY.DOCKET NO	DRAWINGS	TOT CLMS	IND CLMS
10/684,351	10/09/2003	3736	1890	8932-796-999	4	75	3

CONFIRMATION NO. 3338

20583
JONES DAY
222 EAST 41ST ST
NEW YORK, NY 10017

UPDATED FILING RECEIPT

OC000000012319419

Date Mailed: 04/09/2004

Receipt is acknowledged of this regular Patent Application. It will be considered in its order and you will be notified as to the results of the examination. Be sure to provide the U.S. APPLICATION NUMBER, FILING DATE, NAME OF APPLICANT, and TITLE OF INVENTION when inquiring about this application. Fees transmitted by check or draft are subject to collection. Please verify the accuracy of the data presented on this receipt. **If an error is noted on this Filing Receipt, please write to the Office of Initial Patent Examination's Filing Receipt Corrections, facsimile number 703-746-9195. Please provide a copy of this Filing Receipt with the changes noted thereon. If you received a "Notice to File Missing Parts" for this application, please submit any corrections to this Filing Receipt with your reply to the Notice. When the USPTO processes the reply to the Notice, the USPTO will generate another Filing Receipt incorporating the requested corrections (if appropriate).**

Applicant(s)

Christopher J. Ryan, West Chester, PA;
Thomas R. Keyer, Aston, PA;
Martin Walther, West Chester, PA;

Domestic Priority data as claimed by applicant

Foreign Applications

If Required, Foreign Filing License Granted: 01/12/2004

Projected Publication Date: 04/14/2005

Non-Publication Request: No

Early Publication Request: No

Title

Linking transconnector for coupling spinal rods

Preliminary Class

LICENSE FOR FOREIGN FILING UNDER
Title 35, United States Code, Section 184
Title 37, Code of Federal Regulations, 5.11 & 5.15

GRANTED

The applicant has been granted a license under 35 U.S.C. 184, if the phrase "IF REQUIRED, FOREIGN FILING LICENSE GRANTED" followed by a date appears on this form. Such licenses are issued in all applications where the conditions for issuance of a license have been met, regardless of whether or not a license may be required as set forth in 37 CFR 5.15. The scope and limitations of this license are set forth in 37 CFR 5.15(a) unless an earlier license has been issued under 37 CFR 5.15(b). The license is subject to revocation upon written notification. The date indicated is the effective date of the license, unless an earlier license of similar scope has been granted under 37 CFR 5.13 or 5.14.

This license is to be retained by the licensee and may be used at any time on or after the effective date thereof unless it is revoked. This license is automatically transferred to any related applications(s) filed under 37 CFR 1.53(d). This license is not retroactive.

The grant of a license does not in any way lessen the responsibility of a licensee for the security of the subject matter as imposed by any Government contract or the provisions of existing laws relating to espionage and the national security or the export of technical data. Licensees should apprise themselves of current regulations especially with respect to certain countries, of other agencies, particularly the Office of Defense Trade Controls, Department of State (with respect to Arms, Munitions and Implements of War (22 CFR 121-128)); the Office of Export Administration, Department of Commerce (15 CFR 370.10 (j)); the Office of Foreign Assets Control, Department of Treasury (31 CFR Parts 500+) and the Department of Energy.

NOT GRANTED

No license under 35 U.S.C. 184 has been granted at this time, if the phrase "IF REQUIRED, FOREIGN FILING LICENSE GRANTED" DOES NOT appear on this form. Applicant may still petition for a license under 37 CFR 5.12, if a license is desired before the expiration of 6 months from the filing date of the application. If 6 months has lapsed from the filing date of this application and the licensee has not received any indication of a secrecy order under 35 U.S.C. 181, the licensee may foreign file the application pursuant to 37 CFR 5.15(b).

UNITED STATES PATENT AND TRADEMARK OFFICE

Commissioner for Patents
United States Patent and Trademark Office
P.O. Box 1450
Alexandria, VA 22313-1450
www.uspto.gov

J. NICHOLAS GROSS, ATTORNEY
2030 ADDISON ST.
SUITE 610
BERKELEY CA 94704

COPY MAILED

MAR 3 1 2008

OFFICE OF PETITIONS

In re Application of	:	
Bennett et al.	:	
Application No. 10/684357	:	DECISION ON PETITION
Filed: 10/10/2003	:	UNDER 37 CFR 1.78(a)(3)
Attorney Docket No. PHO 99001C	:	

This is a decision on the petition under 37 CFR 1.78(a)(3), filed on December 31, 2007, to accept an unintentionally delayed claim under 35 U.S.C. § 120 for the benefit of priority to the prior-filed nonprovisional application set forth in the amendment filed with the petition.

The petition is **DISMISSED**.

A petition for acceptance of a claim for late priority under 37 CFR 1.78(a)(3) is only applicable to those applications filed on or after November 29, 2000. Further, the petition is appropriate only after the expiration of the period specified in 37 CFR 1.78(a)(2)(ii). In addition, the petition under 37 CFR 1.78(a)(3) must be accompanied by:

(1) the reference required by 35 U.S.C. § 120 and 37 CFR 1.78(a)(2)(i) of the prior-filed application, unless previously submitted;
(2) the surcharge set forth in § 1.17(t); and
(3) a statement that the entire delay between the date the claim was due under 37 CFR 1.78(a)(2)(ii) and the date the claim was filed was unintentional. The Director may require additional information where there is a question whether the delay was unintentional.

The petition does not satisfy item (1) above.

The proposed amendment to claim priority to the prior-filed applications cannot be entered because the examiner has determined that the proposed amendment raises new issues that would require further consideration and/or search. Accordingly, submission of a Request for

Continued Examination (RCE) is required as a condition for acceptance of the late claim for priority under 37 CFR 1.78(a)(3).

An Advisory Action will be mailed to applicants under separate cover.

Additionally, the reference to add the above-noted, prior-filed application in the first sentence of the specification on page one following the title is not acceptable as drafted since it improperly incorporates by reference the prior-filed application. An incorporation by reference statement added after an application's filing date is not effective because no new matter can be added to an application after its filing date (*see* 35 U.S.C. § 132(a)). If an incorporation by reference statement is included in an amendment to the specification to add a benefit claim under 35 U.S.C. § 120 after the filing date of the application, the amendment would not be proper. When a benefit claim under 35 U.S.C. § 120 is submitted after the filing of an application, the reference to the prior application cannot include an incorporation by reference statement of the prior application. *See* Dart Industries v. Banner, 636 F.2d 684, 207 USPQ 273 (C.A.D.C. 1980). *Note* MPEP §§ 201.06(c) and 608.04(b).

Lastly, it is noted that prior-filed Application No. 09/435,145, the benefit of which petitioners attempt to claim, does not have at least one inventor in common with the subject application, as required by 37 CFR 1.78(a)(1). Petitioners should verify that the proper application number has been specified in the claim for benefit.

If reconsideration of this decision is desired, a renewed petition under 37 CFR § 1.78(a)(3) and a supplemental Application Data Sheet or an amendment (complying with the provisions of 37 CFR 1.121 and 37 CFR 1.76(b)(5)) to correct the above matters are required. Additionally, an RCE must be filed, as stated above.

Further correspondence with respect to this matter should be addressed as follows:

By mail:
Mail Stop PETITIONS
Commissioner for Patents
Post Office Box 1450
Alexandria, VA 22313-1450

By hand:
Customer Service Window
Mail Stop Petitions
Randolph Building
401 Dulany Street
Alexandria, VA 22314

By fax:
(571) 273-8300
ATTN: Office of Petitions

Any questions concerning this matter may be directed to Senior Petitions Attorney Douglas I. Wood at (571) 272-3231.

Anthony Knight
Supervisor
Office of Petitions

UNITED STATES PATENT AND TRADEMARK OFFICE

Commissioner for Patents
United States Patent and Trademark Office
P.O. Box 1450
Alexandria, VA 22313-1450
www.uspto.gov

J. NICHOLAS GROSS, ATTORNEY
2030 ADDISON ST.
SUITE 610
BERKELEY CA 94704

COPY MAILED

JUL 03 2008

In re Application of	:	
Bennett et al.	:	
Application No. 10/684357	:	DECISION ON PETITION
Filed: 10/10/2003	:	UNDER 37 CFR 1.78(a)(3)
Attorney Docket No. PHO 99001C	:	

This is a decision on the renewed petition under 37 CFR 1.78(a)(3), filed May 12, 2008, to accept an unintentionally delayed claim under 35 U.S.C. § 120 for the benefit of priority to prior-filed nonprovisional Application No. 09/439,145, as set forth in the amendment filed with the petition.

The petition is **GRANTED**.

A petition for acceptance of a claim for late priority under 37 CFR 1.78(a)(3) is only applicable to those applications filed on or after November 29, 2000. Further, the petition is appropriate only after the expiration of the period specified in 37 CFR 1.78(a)(2)(ii). In addition, the petition under 37 CFR 1.78(a)(3) must be accompanied by:

(1) the reference required by 35 U.S.C. § 120 and 37 CFR 1.78(a)(2)(i) of the prior-filed application, unless previously submitted;

(2) the surcharge set forth in § 1.17(t); and

(3) a statement that the entire delay between the date the claim was due under 37 CFR 1.78(a)(2)(ii) and the date the claim was filed was unintentional. The Director may require additional information where there is a question whether the delay was unintentional.

All of the above requirements having been satisfied, the late claim for priority under 35 U.S.C. § 120 is accepted as being unintentionally delayed.

The granting of the petition to accept the delayed benefit claim to the prior-filed application under 37 CFR 1.78(a)(3) should not be construed as meaning that this application is entitled

to the benefit of the prior-filed application. In order for this application to be entitled to the benefit of the prior-filed application, all other requirements under 35 U.S.C. § 120 and 37 CFR 1.78(a)(1) and (a)(2) must be met. Similarly, the fact that the corrected Filing Receipt accompanying this decision on petition includes the prior-filed application should not be construed as meaning that applicant is entitled to the claim for benefit of priority to the prior-filed application noted thereon. Accordingly, the examiner will, in due course, consider this benefit claim and determine whether the application is entitled to the benefit of the earlier filing date.

A corrected Filing Receipt, which includes the priority claim to the prior-filed nonprovisional application, accompanies this decision on petition.

Receipt of the Request for Continued Examination (RCE) filed on May 2, 2008, is acknowledged.

Any inquiries concerning this decision may be directed to Senior Petitions Attorney Douglas I. Wood at (571) 272-3231. All other inquiries concerning either the examination procedures or status of the application should be directed to the Technology Center.

This application is being forwarded to Technology Center Art Unit 2626 for consideration by the examiner of applicant's entitlement to claim benefit of priority under 35 U.S.C. § 120 to the prior-filed application.

Anthony Knight
Supervisor
Office of Petitions

ATTACHMENT: Corrected Filing Receipt

UNITED STATES PATENT AND TRADEMARK OFFICE

UNITED STATES DEPARTMENT OF COMMERCE
United States Patent and Trademark Office
Address: COMMISSIONER FOR PATENTS
P.O. Box 1450
Alexandria, Virginia 22313-1450
www.uspto.gov

APPLICATION NUMBER	FILING or 371(c) DATE	GRP ART UNIT	FIL FEE REC'D	ATTY.DOCKET.NO	TOT CLAIMS	IND CLAIMS
10/684,357	10/10/2003	2626	665	PHO 99001C	32	7

CONFIRMATION NO. 3197

CORRECTED FILING RECEIPT

23694
J. NICHOLAS GROSS, ATTORNEY
2030 ADDISON ST.
SUITE 610
BERKELEY, CA 94704

Date Mailed: 07/03/2008

Receipt is acknowledged of this non-provisional patent application. The application will be taken up for examination in due course. Applicant will be notified as to the results of the examination. Any correspondence concerning the application must include the following identification information: the U.S. APPLICATION NUMBER, FILING DATE, NAME OF APPLICANT, and TITLE OF INVENTION. Fees transmitted by check or draft are subject to collection. Please verify the accuracy of the data presented on this receipt. **If an error is noted on this Filing Receipt, please submit a written request for a Filing Receipt Correction. Please provide a copy of this Filing Receipt with the changes noted thereon. If you received a "Notice to File Missing Parts" for this application, please submit any corrections to this Filing Receipt with your reply to the Notice. When the USPTO processes the reply to the Notice, the USPTO will generate another Filing Receipt incorporating the requested corrections**

Applicant(s)

Ian M. Bennett, Palo Alto, CA;
Bandi Ramesh Babu, Anantapur, INDIA;
Kishor Morkhandikar, Gulbarga, INDIA;
Pallaki Gururaj, Bangalore, INDIA;

Power of Attorney:
J Gross--34175

Domestic Priority data as claimed by applicant

This application is a CON of 09/439,145 11/12/1999 PAT 6,633,846

Foreign Applications

If Required, Foreign Filing License Granted: 01/02/2004

The country code and number of your priority application, to be used for filing abroad under the Paris Convention, is **US 10/684,357**

Projected Publication Date: Not Applicable

Non-Publication Request: No

Early Publication Request: No
**** SMALL ENTITY ****

Title

Distributed real time speech recognition system

Preliminary Class

704

PROTECTING YOUR INVENTION OUTSIDE THE UNITED STATES

Since the rights granted by a U.S. patent extend only throughout the territory of the United States and have no effect in a foreign country, an inventor who wishes patent protection in another country must apply for a patent in a specific country or in regional patent offices. Applicants may wish to consider the filing of an international application under the Patent Cooperation Treaty (PCT). An international (PCT) application generally has the same effect as a regular national patent application in each PCT-member country. The PCT process **simplifies** the filing of patent applications on the same invention in member countries, but **does not result** in a grant of "an international patent" and does not eliminate the need of applicants to file additional documents and fees in countries where patent protection is desired.

Almost every country has its own patent law, and a person desiring a patent in a particular country must make an application for patent in that country in accordance with its particular laws. Since the laws of many countries differ in various respects from the patent law of the United States, applicants are advised to seek guidance from specific foreign countries to ensure that patent rights are not lost prematurely.

Applicants also are advised that in the case of inventions made in the United States, the Director of the USPTO must issue a license before applicants can apply for a patent in a foreign country. The filing of a U.S. patent application serves as a request for a foreign filing license. The application's filing receipt contains further information and guidance as to the status of applicant's license for foreign filing.

Applicants may wish to consult the USPTO booklet, "General Information Concerning Patents" (specifically, the section entitled "Treaties and Foreign Patents") for more information on timeframes and deadlines for filing foreign patent applications. The guide is available either by contacting the USPTO Contact Center at 800-786-9199, or it can be viewed on the USPTO website at http://www.uspto.gov/web/offices/pac/doc/general/index.html.

For information on preventing theft of your intellectual property (patents, trademarks and copyrights), you may wish to consult the U.S. Government website, http://www.stopfakes.gov. Part of a Department of Commerce initiative, this website includes self-help "toolkits" giving innovators guidance on how to protect intellectual property in specific countries such as China, Korea and Mexico. For questions regarding patent enforcement issues, applicants may call the U.S. Government hotline at 1-866-999-HALT (1-866-999-4158).

LICENSE FOR FOREIGN FILING UNDER

Title 35, United States Code, Section 184

Title 37, Code of Federal Regulations, 5.11 & 5.15

GRANTED

The applicant has been granted a license under 35 U.S.C. 184, if the phrase "IF REQUIRED, FOREIGN FILING LICENSE GRANTED" followed by a date appears on this form. Such licenses are issued in all applications where the conditions for issuance of a license have been met, regardless of whether or not a license may be required as

set forth in 37 CFR 5.15. The scope and limitations of this license are set forth in 37 CFR 5.15(a) unless an earlier license has been issued under 37 CFR 5.15(b). The license is subject to revocation upon written notification. The date indicated is the effective date of the license, unless an earlier license of similar scope has been granted under 37 CFR 5.13 or 5.14.

This license is to be retained by the licensee and may be used at any time on or after the effective date thereof unless it is revoked. This license is automatically transferred to any related applications(s) filed under 37 CFR 1.53(d). This license is not retroactive.

The grant of a license does not in any way lessen the responsibility of a licensee for the security of the subject matter as imposed by any Government contract or the provisions of existing laws relating to espionage and the national security or the export of technical data. Licensees should apprise themselves of current regulations especially with respect to certain countries, of other agencies, particularly the Office of Defense Trade Controls, Department of State (with respect to Arms, Munitions and Implements of War (22 CFR 121-128)); the Bureau of Industry and Security, Department of Commerce (15 CFR parts 730-774); the Office of Foreign AssetsControl, Department of Treasury (31 CFR Parts 500+) and the Department of Energy.

NOT GRANTED

No license under 35 U.S.C. 184 has been granted at this time, if the phrase "IF REQUIRED, FOREIGN FILING LICENSE GRANTED" DOES NOT appear on this form. Applicant may still petition for a license under 37 CFR 5.12, if a license is desired before the expiration of 6 months from the filing date of the application. If 6 months has lapsed from the filing date of this application and the licensee has not received any indication of a secrecy order under 35 U.S.C. 181, the licensee may foreign file the application pursuant to 37 CFR 5.15(b).

UNITED STATES PATENT AND TRADEMARK OFFICE

Commissioner for Patents
United States Patent and Trademark Office
P.O. Box 1450
Alexandria, VA 22313-1450
www.uspto.gov

COPY MAILED

NOV 1 0 2008

OFFICE OF PETITIONS

J. NICHOLAS GROSS, ATTORNEY
2030 ADDISON ST., SUITE 610
BERKELEY, CA 94704

In re Application of :
Ian M. BENNETT, et al :
Application No. 10/684,357 : ON PETITION
Filed: October 10, 2003 :
Attorney Docket No. PHO 99001C :

This is a decision on the petition under the unintentional provisions of 37 CFR 1.137(b), filed September 11, 2008, to revive the above-identified application.

The petition is **GRANTED**.

The application became abandoned for failure to timely file a reply within the meaning of 37 CFR 1.113 to the final Office action of September 4, 2007. The proposed reply required for consideration of a petition to revive must be a Notice of Appeal (and appeal fee required by 37 CFR 41.20(b)(2), an amendment that *prima facie* places the application in condition for allowance, a Request for Continued Examination and submission (37 CFR 1.114), or the filing of a continuing application under 37 CFR 1.53(b). See MPEP 711.03(c)(II)(A)(2). A two (2) month and a three (3) month extension of time pursuant to the provisions of 37 CFR 1.136(a) were obtained. Accordingly, the date of abandonment of this application is February 15, 2008.

The petition satisfies the requirements of 37 CFR 1.137(b) in that petitioner has supplied (1) the reply in the form of a Request for Continued Examination (RCE) and fee of $405, and the submission required by 37 CFR 1.114; (2) the petition fee of $770; and (3) the required statement of unintentional delay have been received.

Telephone inquiries concerning this decision should be directed to Diane Goodwyn at (571) 272-6735.

This application is being referred to Technology Center AU 2626 for processing of the RCE and for appropriate action by the Examiner in the normal course of business on the amendment submitted in accordance with 37 CFR 1.114.

Thurman Page
Petitions Examiner
Office of Petitions

UNITED STATES PATENT AND TRADEMARK OFFICE

Commissioner for Patents
United States Patent and Trademark Office
P.O. Box 1450
Alexandria, VA 22313-1450
www.uspto.gov

MODIANO & ASSOCIATI
Via Meravigli, 16
20123 MILANO - ITALY

COPY MAILED

JAN 1 4 2005

OFFICE OF PETITIONS

In re Application of: Luca Zenaboni	:	
Application No. 10/684,381	:	NOTICE
Filed: October 15, 2003	:	
Attorney Docket No. 38144/GM/IP	:	

This is a notice regarding your request for acceptance of a fee deficiency submission under 37 CFR 1.28. On September 1, 1998, the Court of Appeals for the Federal Circuit held that 37 CFR 1.28(c) is the sole provision governing the time for correction of the erroneous payment of the issue fee as a small entity. **See DH Technology v. Synergystex International, Inc. 154 F.3d 1333, 47 USPQ2d 1865 (Fed. Cir. Sept. 1, 1998).**

The Office no longer investigates or rejects original or reissue applications under 37 CFR 1.56. **1098 Off. Gaz. Pat. Office 502 (January 3, 1989)**. Therefore, nothing in this Notice is intended to imply that an investigation was done.

Your fee deficiency submission under 37 CFR 1.28 is hereby **ACCEPTED**.

This file is being referred to the Office of Publications for processing into a patent.

Inquiries related to this communication should be directed to the undersigned at (571) 272-3226.

Andrea Smith
Petitions Examiner
Office of Petitions
Office of the Deputy Commissioner
for Patent Examination Policy

UNITED STATES PATENT AND TRADEMARK OFFICE

Commissioner for Patents
United States Patent and Trademark Office
P.O. Box 1450
Alexandria, VA 22313-1450
www.uspto.gov

MILES & STOCKBRIDGE, PC
1751 PINNACLE DRIVE
SUITE 500
MCLEAN, VA 22102-3833

COPY MAILED
JUN 30 2006
OFFICE OF PETITIONS

In re Patent No. 6,893,785 :
Issue Date : May 17, 2005 :
Application No. 10/684,391 : DECISION ON PETITION
Filed: October 15, 2003 :
Patentee(s): ToshihikoTanaka, et. al. :

This is a decision on the petition, filed on September 13, 2005, which is being treated as a request under 37 CFR 3.81(b)[1] to correct the assignee's name on the front page of the above-identified patent by way of a certificate of correction.

The petition is **dismissed**.

Petitioner requests issuance of a certificate of correction in the name of "Renesas Technology Corporation, Tokyo, Japan." 37 CFR 3.81(a) permits the patent to issue to the assignee, provided that, at the time the issue fee is paid, the name of an assignee is provided. 37 CFR 3.81(b) permits the patent to issue in the name of an assignee if the assignment was submitted after payment of the issue fee but ***prior to issuance of a patent***. Patent and Trademark Office assignment records disclose that an assignment from Hitachi, Ltd. to Renesas Technology Corporation was recorded on December 11, 2003, after the date of issuance of this patent. Accordingly, since the assignment was not submitted for recordation until after issuance of this patent, issuance of a certificate of correction would not be proper. *See* MPEP Section 307.

Since a processing fee of $130 is needed for treatment of the instant petition, that fee is being charged to petitioner's deposit account, as authorized.

This application file is being referred to Files Repository.

Inquiries concerning this decision should be directed to the undersigned at (571) 272-3226.

Andrea Smith
Petitions Examiner
Office of Petitions

[1] *See* Official Gazette of June 22, 2004

UNITED STATES PATENT AND TRADEMARK OFFICE

Commissioner for Patents
United States Patent and Trademark Office
P.O. Box 1450
Alexandria, VA 22313-1450
www.uspto.gov

In re Patent No. 6896380
Issue Date: May 24,2005
Application No. 10684393
Filed: October 15,2003
Attorney Docket No.

:
:DECISION GRANTING PETITION
:UNDER 37 CFR 1.378(c)
:

This is a decision on the electronic petition, filed September 9,2009 ,under 37 CFR 1.378(c) to accept the unintentionally delayed payment of the 3.5 year maintenance fee for the above-identified patent.

The petition is **GRANTED**.

The maintenance fee is accepted, and the above-identified patent reinstated as of September 9,2009 . This decision also constitutes notice that the fee has been accepted. An electronic copy of the petition and this decision has been created as an entry in the Image File Wrapper. Nevertheless, petitioner should print and retain an independent copy.

Telephone inquiries related to this electronic decision should be directed to the Electronic Business Center at 1-866-217-9197.

PTO/SB/66 (03-09)
Approved for use through 03/31/2012. OMB 0651-0016
U.S. Patent and Trademark Office: U.S. DEPARTMENT OF COMMERCE
Under the Paperwork Reduction Act of 1995, no persons are required to respond to a collection of information unless it displays valid OMB control number.

PETITION TO ACCEPT UNINTENTIONALLY DELAYED PAYMENT OF MAINTENANCE FEE IN AN EXPIRED PATENT (37 CFR 1.378(c))

Patent Number	Issue Date (YYYY-MM-DD)	Application Number	Filing Date (YYYY-MM-DD)	Docket Number (if applicable)
6896380	2005-05-24	10/684,393	2003-10-15	

CAUTION: Maintenance fee (and surcharge, if any) payment must correctly identify: (1) the patent number and (2) the application number of the actual U.S. application leading to issuance of that patent to ensure the fee(s) is/are associated with the correct patent. 37 CFR 1.366(c) and (d).

SMALL ENTITY

☐ Patentee claims, or has previously claimed, small entity status. See 37 CFR 1.27.

LOSS OF ENTITLEMENT TO SMALL ENTITY STATUS

☐ Patentee is no longer entitled to small entity status. See 37 CFR 1.27(g)

NOT Small Entity

	Fee	Code
◉	3 ½ year	(1551)
○	7 ½ year	(1552)
○	11 ½ year	(1553)

Small Entity

	Fee	Code
○	3 ½ year	(2551)
○	7 ½ year	(2552)
○	11 ½ year	(2553)

SURCHARGE

The surcharge required by 37 CFR 1.20(i)(2) (Fee Code 1558) must be paid as a condition of accepting unintentionally delayed payment of the maintenance fee.

MAINTENANCE FEE (37 CFR 1.20(e)-(g))

The appropriate maintenance fee must be submitted with this petition.

STATEMENT

THE UNDERSIGNED CERTIFIES THAT THE DELAY IN PAYMENT OF THE MAINTENANCE FEE TO THIS PATENT WAS UNINTENTIONAL

PETITIONER(S) REQUEST THAT THE DELAYED PAYMENT OF THE MAINTENANCE FEE BE ACCEPTED AND THE PATENT REINSTATED

THIS PORTION MUST BE COMPLETED BY THE SIGNATORY OR SIGNATORIES

37 CFR 1.378(d) states: "Any petition under this section must be signed by an attorney or agent registered to practice before the Patent and Trademark Office, or by the patentee, the assignee, or other party in interest."

I certify, in accordance with 37 CFR 1.4(d)(4) that I am

◉ An attorney or agent registered to practice before the Patent and Trademark Office

○ A sole patentee

○ A joint patentee; I certify that I am authorized to sign this submission on behalf of all the other patentees.

○ A joint patentee; all of whom are signing this e-petition

○ The assignee of record of the entire interest

Patent Practitioner			
A signature of the applicant or representative is required in accordance with 37 CFR 1.33 and 10.18. Please see 37 CFR 1.4(d) for the form of the signature			
Signature	/Gregory J. Gore/	Date (YYYY-MM-DD)	2009-09-09
Name	Gregory J. Gore	Registration Number	30057

This collection of information is required by 37 CFR 1.378(c). The information is required to obtain or retain a benefit by the public which is to file (and by the USPTO to process) an application. Confidentiality is governed by 35 U.S.C. 122 and 37 CFR 1.11 and 1.14. This collection is estimated to take 1 hour to complete, including gathering, preparing, and submitting the completed application form to the USPTO. Time will vary depending upon the individual case. Any comments on the amount of time you require to complete this form and/ or suggestions for reducing this burden, should be sent to the Chief Information Officer, U.S. Patent and Trademark Office, U.S. Department of Commerce, P.O. Box 1450, Alexandria, VA 22313-1450. DO NOT SEND FEES OR COMPLETED FORMS TO THIS ADDRESS. **This form can only be used when in conjunction with EFS-Web. If this form is mailed to the USPTO, it may cause delays in reinstating the patent.**

Privacy Act Statement

The Privacy Act of 1974 (P.L. 93-579) requires that you be given certain information in connection with your submission of the attached form related to a patent application or patent. Accordingly, pursuant to the requirements of the Act, please be advised that: (1) the general authority for the collection of this information is 35 U.S.C. 2(b)(2); (2) furnishing of the information solicited is voluntary; and (3) the principal purpose for which the information is used by the U.S. Patent and Trademark Office is to process and/or examine your submission related to a patent application or patent. If you do not furnish the requested information, the U.S. Patent and Trademark Office may not be able to process and/or examine your submission, which may result in termination of proceedings or abandonment of the application or expiration of the patent.

The information provided by you in this form will be subject to the following routine uses:

1. The information on this form will be treated confidentially to the extent allowed under the Freedom of Information Act (5 U.S.C. 552) and the Privacy Act (5 U.S.C. 552a). Records from this system of records may be disclosed to the Department of Justice to determine whether the Freedom of Information Act requires disclosure of these records.

2. A record from this system of records may be disclosed, as a routine use, in the course of presenting evidence to a court, magistrate, or administrative tribunal, including disclosures to opposing counsel in the course of settlement negotiations.

3. A record in this system of records may be disclosed, as a routine use, to a Member of Congress submitting a request involving an individual, to whom the record pertains, when the individual has requested assistance from the Member with respect to the subject matter of the record.

4. A record in this system of records may be disclosed, as a routine use, to a contractor of the Agency having need for the information in order to perform a contract. Recipients of information shall be required to comply with the requirements of the Privacy Act of 1974, as amended, pursuant to 5 U.S.C. 552a(m).

5. A record related to an International Application filed under the Patent Cooperation Treaty in this system of records may be disclosed, as a routine use, to the International Bureau of the World Intellectual Property Organization, pursuant to the Patent Cooperation Treaty.

6. A record in this system of records may be disclosed, as a routine use, to another federal agency for purposes of National Security review (35 U.S.C. 181) and for review pursuant to the Atomic Energy Act (42 U.S.C. 218(c)).

7. A record from this system of records may be disclosed, as a routine use, to the Administrator, General Services, or his/her designee, during an inspection of records conducted by GSA as part of that agency's responsibility to recommend improvements in records management practices and programs, under authority of 44 U.S.C. 2904 and 2906. Such disclosure shall be made in accordance with the GSA regulations governing inspection of records for this purpose, and any other relevant (i.e., GSA or Commerce) directive. Such disclosure shall not be used to make determinations about individuals.

8. A record from this system of records may be disclosed, as a routine use, to the public after either publication of the application pursuant to 35 U.S.C. 122(b) or issuance of a patent pursuant to 35 U.S.C. 151. Further, a record may be disclosed, subject to the limitations of 37 CFR 1.14, as a routine use, to the public if the record was filed in an application which became abandoned or in which the proceedings were terminated and which application is referenced by either a published application, an application open to public inspections or an issued patent.

9. A record from this system of records may be disclosed, as a routine use, to a Federal, State, or local law enforcement agency, if the USPTO becomes aware of a violation or potential violation of law or regulation.

UNITED STATES PATENT AND TRADEMARK OFFICE

Commissioner for Patents
United States Patent and Trademark Office
P.O. Box 1450
Alexandria, VA 22313-1450
www.uspto.gov

COPY MAILED

SEP 19 2006

OFFICE OF PETITIONS

Oliff & Berridge
P.O. Box 19928
Alexandria, VA 22314

In re Application of :
Hiroyuki Aburatani et al. :
Application No. 10/684,422 : DECISION ON PETITION
Filed: October 15, 2003 : TO WITHDRAW
Attorney Docket No. 113991 : FROM RECORD
:

This is a decision on the Request to Withdraw as attorney or agent of record under 37 C.F.R. § 1.36(b), filed July 11, 2006.

The request is **NOT APPROVED**.

A grantable request to withdraw as attorney/agent of record must be signed by every attorney/agent seeking to withdraw or contain a clear indication that one attorney is signing on behalf of another/others. A request to withdraw will not be approved unless at least 30 (thirty) days would remain between the date of approval and the later of the expiration date of a time to file a response or the expiration date of the maximum time period which can be extended under 37 C.F.R. § 1.136(a).

The request cannot be approved because there remains less than 30 (thirty days) between the date of this decision and the maximum extendable time period for filing a response to the Office action mailed on March 24, 2006.

All future communications from the Office will continue to be directed to the above-listed address until otherwise notified by applicant.

Telephone inquiries concerning this decision should be directed to Terri Williams at 571-272-2991.

David Bucci
Petitions Examiner
Office of Petitions

SPE RESPONSE FOR CERTIFICATE OF CORRECTION

Paper No.: X

DATE : **September 25,2007**

TO SPE OF : ART UNIT **2816**

SUBJECT : Request for Certificate of Correction for Appl. No.: **10/684,441** Patent No.: **7005912 B2**

A response is requested with respect to a request for a certificate of correction.

With respect to the change(s) requested to correct Office and/or Applicant's errors, should the patent read as shown in the certificate of correction attached herewith or the COCIN document(s), in IFW images for the above-identified patented application? No new matter should be introduced, nor should the scope or meaning of the claims be changed.

If the response is for an IFW, within **7** days, please complete and forward the response, to the employee (named below) via scanning into application images, using document code **COCX**.

DO NOT SENT TO ATTORNEY

If the response is for a paper file wrapper, please complete the response and forward the response with the paper file wrapper, to the employee (named below), within **7** days, to:

Certificates of Correction Branch (CofC)
South Tower - 9A22
Palm Location 7580

LAMONTE NEWSOME
Certificates of Correction Branch
703-308-9390 ext. 112

Thank You For Your Assistance

The request for issuing the above-identified correction(s) is hereby:

Note your decision on the appropriate box.

☒ **Approved**	**All** changes apply.
☐ **Approved in Part**	Specify below which changes **do not** apply.
☐ **Denied**	State the reasons for denial below.

Comments: _____

_____

_____

_____

_____

N. DREW RICHARDS
SUPERVISORY PATENT EXAMINER

SPE 2816 **Art Unit**

SPE RESPONSE FOR CERTIFICATE OF CORRECTION

Paper No.: X

DATE : **September 25,2007**

TO SPE OF : ART UNIT **2816**

SUBJECT : Request for Certificate of Correction for Appl. No.: **10/684,441** Patent No.: **7005912 B2**

A response is requested with respect to a request for a certificate of correction.

With respect to the change(s) requested to correct Office and/or Applicant's errors, should the patent read as shown in the certificate of correction attached herewith or the COCIN document(s), in IFW images for the above-identified patented application? No new matter should be introduced, nor should the scope or meaning of the claims be changed.

If the response is for an IFW, within **7** days, please complete and forward the response, to the employee (named below) via scanning into application images, using document code **COCX**.

DO NOT SENT TO ATTORNEY

If the response is for a paper file wrapper, please complete the response and forward the response with the paper file wrapper, to the employee (named below), within **7** days, to:

Certificates of Correction Branch (CofC)
South Tower - 9A22
Palm Location 7580

LAMONTE NEWSOME
Certificates of Correction Branch
703-308-9390 ext. 112

Thank You For Your Assistance

The request for issuing the above-identified correction(s) is hereby:

Note your decision on the appropriate box.

☒ **Approved**	**All** changes apply.
☐ **Approved in Part**	Specify below which changes **do not** apply.
☐ **Denied**	State the reasons for denial below.

Comments: _____

_____

_____

_____

_____

_____ 2816

SPE **Art Unit**

UNITED STATES PATENT AND TRADEMARK OFFICE

Commissioner for Patents
United States Patent and Trademark Office
P.O. Box 1450
Alexandria, VA 22313-1450
www.uspto.gov

FEB 17 2005

Peter O'D. Gibson
6320 Greenspring Avenue, #304
Baltimore MD 21209

In re Application of
Matthew McMullen
Serial No.: 10/684,485
Filed: October 15, 2003
For: Full Size Fully Articulated Doll With Selectively Displayed Alternative Faces

DECISION ON PETITION

This is in response to the petition applicant filed on June 21, 2004 to make the above-identified application special under the provisions of 37 CFR 1.102(d).

Applicant has satisfied the provisions set forth in M.P.E.P. 708.02, VIII, thus the petition is **GRANTED**.

The application will be forwarded to the examiner for action on the merits commensurate with this decision.

Should there be any questions with regard to this letter please contact Esther M. Kepplinger by letter addressed to the Director, Technology Center 3700, P.O. Box 1450 Alexandria, VA 22313-1450, or by telephone at (571) 272-2975 or by facsimile transmission at (571) 273-0275.

Esther M. Kepplinger

Esther M. Kepplinger, Director
Technology Center 3700

UNITED STATES PATENT AND TRADEMARK OFFICE

COMMISSIONER FOR PATENTS
UNITED STATES PATENT AND TRADEMARK OFFICE
P.O. BOX 1450
ALEXANDRIA, VA 22313-1450
www.uspto.gov

GIBSON, PETER O'DONOVAN
VIA DEL MUSCHIO 12, INT. 2
CASTIGLIONE D. PESCAIA 58043 IT **ITALY**

COPY MAILED
NOV 16 2006
OFFICE OF PETITIONS

In re Application of	:	
Matthew McMullen	:	
Application No. 10/684,485	:	ON PETITION
Filed: October 15, 2003	:	
Attorney Docket No. N/A	:	

This is a decision on the petition under 37 CFR 1.137(b), filed on July 10, 2006, to revive the above-identified application.

The application became abandoned for failure to respond to the non-final Office action mailed on June 23, 2005.

37 CFR 1.137(b)(3) requires a statement that the entire delay in filing the required reply from the due date for the reply until the filing of a grantable petition pursuant to 37 CFR 1.137(b) was unintentional. Since the statement contained in the instant petition varies from the language required by 37 CFR 1.137(b)(3), the statement is being construed as the statement required by 37 CFR 1.137(b)(3) and petitioner must notify the Office if this is **not** a correct interpretation of the statement.

The petition satisfies the requirements of 37 CFR 1.137(b) in that petitioner has supplied (1) the reply in the form of an amendment; (2) the petition fee of $750; and (3) an adequate statement of unintentional delay. Therefore, the petition is **GRANTED**.

This application file is being referred to Technology Center Art Unit 3735, for review of the amendment filed with the instant petition.

Telephone inquiries concerning this decision should be directed to the undersigned at (571) 272-3226.

Andrea Smith
Petitions Examiner
Office of Petitions

UNITED STATES PATENT AND TRADEMARK OFFICE

COMMISSIONER FOR PATENTS
UNITED STATES PATENT AND TRADEMARK OFFICE
P.O. BOX 1450
ALEXANDRIA, VA 22313-1450
www.uspto.gov

HUMAN GENOME SCIENCES INC
INTELLECTUAL PROPERTY DEPT.
14200 SHADY GROVE ROAD
ROCKVILLE MD 20850

COPY MAILED

NOV 24 2004

OFFICE OF PETITIONS

In re Application of
Ruben et al.
Application No. 10/684,496
Filed: October 15, 2003
For: 64 HUMAN SECRETED PROTEINS
Attorney Docket No: PZ011P2C1
Pub. No.: US 2004/0146893 A1
Pub. Date: July 29, 2004

This is a decision on the request for corrected patent application publication under 37 CFR 1.221(b), filed on August 17, 2004 for the above-identified application.

The request is DISMISSED.

Applicant request that the application be republished because the patent application publication contains a material error, as the sequence listing filed with the application is not in the publication itself or in the PSIPS database.

37 CFR 1.221(b) is applicable "only when the Office makes a material mistake which is apparent from Office records." A material mistake must affect the public's ability to appreciate the technical disclosure of the patent application publication, to determine the scope of the patent application publication, or to determine the scope of the provisional rights that an applicant may seek to enforce upon issuance of a patent.[1] The instant request does not identify a material mistake in the publication made by the Office:

The errors are not material mistakes because the application is a Continuation of U.S. Application 09/776,724 filed February 6, 2001, now U.S. Patent Application Publication No. 2003/0050455 A1. Since, the parent application is published and contains the information printed correctly, the errors do not affect the public's ability to appreciate the technical disclosure of the patent application publication, to determine the scope of the patent application publication or to determine the scope of the provisional rights that an applicant may seek to enforce upon issuance

[1] Changes to Implement Eighteen-Month Publication of Patent Applications, 65 FR 57023, 57038 (Sept. 20, 2000), 1239 Off. Gaz. Pat. Office Notices 63, 75 (Oct. 10, 2000) (final rule).

of a patent. The error also does not affect the use of the patent application publication as a prior art reference, because the continuity data is correctly published and the patent has the best date as a reference. Furthermore, this is not a material error since the Image File Wrapper (IFW) for this application is available to the public, as of July 31, 2004.

The applicant is advised that a "request for republication of an application previously published" may be filed under 37 CFR 1.221(a). Such a request for republication "must include a copy of the application in compliance with the Office's electronic filing system requirements and be accompanied by the publication fee set forth in § 1.18(d) and the processing fee set forth in § 1.17(i)." If the request for republication does not comply with the electronic filing system requirements, the republication will not take place and the publication fee set forth in § 1.18(d) will be refunded. The processing fee will be retained.

Any request for republication under 37 CFR 1.221(a), must be submitted via the EFS system and questions or request for reconsideration of this decision, should be addressed as follows:

By mail to: Mail Stop PGPUB
Commissioner for Patents
P.O. Box 1450
Alexandria, VA 22313-1450

By facsimile: 703-872-9306

Inquiries relating to this matter may be directed to Mark Polutta at (571) 272-7709.

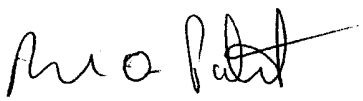

Mark O. Polutta
Office of Patent Legal Administration
Office of the Deputy Commissioner
for Patent Examination Policy

SPE RESPONSE FOR CERTIFICATE OF CORRECTION

Paper No.: _____

DATE : 09-04-09

TO SPE OF : ART UNIT 1626

SUBJECT : Request for Certificate of Correction for Appl. No.: 10/684502 Patent No.: 7256208

Please respond to this request for a certificate of correction within 7 days.

FOR IFW FILES:

Please review the requested changes/corrections as shown in the **COCIN** document(s) in the IFW application image. No new matter should be introduced, nor should the scope or meaning of the claims be changed.

Please complete the response (see below) and forward the completed response to scanning using document code **COCX**.

FOR PAPER FILES:

Please review the requested changes/corrections as shown in the attached certificate of correction. Please complete this form (see below) and forward it with the file to:

Certificates of Correction Branch (CofC)
South Tower - 9A22
Palm Location 7580

Angela Green
Certificates of Correction Branch
703-756-1541

Thank You For Your Assistance

The request for issuing the above-identified correction(s) is hereby:
Note your decision on the appropriate box.

☑ **Approved**	**All** changes apply.
☐ **Approved in Part**	Specify below which changes **do not** apply.
☐ **Denied**	State the reasons for denial below.

Comments: _____

_____

_____

_____

_____

SPE 1623 Art Unit

SPE RESPONSE FOR CERTIFICATE OF CORRECTION

DATE : 2/11/09

Paper No.: —

TO SPE OF : ART UNIT 2624

SUBJECT : Request for Certificate of Correction for Appl. No.: 10/684504 Patent No.: 7397958 B2

Please respond to this request for a certificate of correction within 7 days.

FOR IFW FILES:

Please review the requested changes/corrections as shown in the **COCIN** document(s) in the IFW application image. No new matter should be introduced, nor should the scope or meaning of the claims be changed.

Please complete the response (see below) and forward the completed response to scanning using document code **COCX**.

FOR PAPER FILES:

Please review the requested changes/corrections as shown in the attached certificate of correction. Please complete this form (see below) and forward it with the file to:

Certificates of Correction Branch (CofC)
South Tower - 9A22
Palm Location 7580

Virginia Tolbert
Certificates of Correction Branch
703-308-9390 ext. 113

Thank You For Your Assistance

The request for issuing the above-identified correction(s) is hereby:
Note your decision on the appropriate box.

- [X] **Approved** — All changes apply.
- [ ] **Approved in Part** — Specify below which changes **do not** apply.
- [ ] **Denied** — State the reasons for denial below.

Comments: _____

/Bhavesh Mehta/ SPE, TC 2600 — **SPE**

2624 — **Art Unit**

UNITED STATES PATENT AND TRADEMARK OFFICE

Commissioner for Patents
United States Patent and Trademark Office
P.O. Box 1450
Alexandria, VA 22313-1450
www.uspto.gov

OBLON SPIVAK McCLELLAND
MAIER & NEUSTADT PC
1940 DUKE STREET
ALEXANDRIA, VA 22314

COPY MAILED

AUG 0 4 2005

OFFICE OF PETITIONS

In re Application of :
Toshiyuki Enomoto et al :
Application No. 10/684,506 : DECISION GRANTING PETITION
Filed: October 15, 2003 : UNDER 37 CFR 1.313(c)(2)
Attorney Docket No. 243654US-3 DIV :

This is a decision on the petition, filed August 2, 2005, under 37 CFR 1.313(c)(2) to withdraw the above-identified application from issue after payment of the issue fee.

The petition is **GRANTED**.

The above-identified application is withdrawn from issue for consideration of a submission under 37 CFR 1.114 (request for continued examination). See 37 CFR 1.313(c)(2).

Petitioner is advised that the issue fee paid on June 2, 2005 in the above-identified application cannot be refunded. If, however, the above-identified application is again allowed, petitioner may request that it be applied towards the issue fee required by the new Notice of Allowance.[1]

Telephone inquiries should be directed to the undersigned at (571) 272-3218.

This matter is being referred to Technology Center AU 3723 for processing of the request for continued examination under 37 CFR 1.114 and for consideration of the Information Disclosure Statement.

Frances Hicks
Petitions Examiner
Office of Petitions

---

[1] *The request to apply the issue fee to the new Notice may be satisfied by completing and returning the new Issue Fee Transmittal Form PTOL-85(b), which includes the following language thereon: "Commissioner for Patents is requested to apply the Issue Fee and Publication Fee (if any) or re-apply any previously paid issue fee to the application identified above." Petitioner is advised that, whether a fee is indicated as being due or not, the Issue Fee Transmittal Form* **must** *be completed and timely submitted to avoid abandonment. Note the language in bold text on the first page of the Notice of Allowance and Fee(s) Due (PTOL-85).*

UNITED STATES PATENT AND TRADEMARK OFFICE

Commissioner for Patents
United States Patent and Trademark Office
P.O. Box 1450
Alexandria, VA 22313-1450
www.uspto.gov

SPECKMAN LAW GROUP
1501 WESTERN AVE
SEATTLE, WA 98101

COPY MAILED

JUN 18 2004

OFFICE OF PETITIONS

In re Application of :
Janet A. Warrington et al :
Application No. 10/684,539 : NOTICE
Filed: October 14, 2003 :
Attorney Docket No. 9900.1005 :

This is a notice regarding your request for acceptance of a fee deficiency submission under 37 CFR 1.28. On September 1, 1998, the Court of Appeals for the Federal Circuit held that 37 CFR 1.28(c) is the sole provision governing the time for correction of the erroneous payment of the issue fee as a small entity. **See DH Technology v. Synergystex International, Inc. 154 F.3d 1333, 47 USPQ2d 1865 (Fed. Cir. Sept. 1, 1998).**

The Office no longer investigates or rejects original or reissue applications under 37 CFR 1.56. **1098 Off. Gaz. Pat. Office 502 (January 3, 1989).** Therefore, nothing in this Notice is intended to imply that an investigation was done.

Your fee deficiency submission under 37 CFR 1.28 is hereby **ACCEPTED.**

Inquiries related to this communication should be directed to the Office of Petitions Staff at (703) 305-9285.

This matter is being referred to Technology Center AU 1634.

Wan Laymon
Petitions Examiner
Office of Petitions
Office of the Deputy Commissioner
for Patent Examination Policy

UNITED STATES PATENT AND TRADEMARK OFFICE

Commissioner for Patents
United States Patent and Trademark Office
P.O. Box 1450
Alexandria, VA 22313-1450

Date Mailed : February 2, 2009
Serial No. :10/684548
Patent No. 6,627,198 B2
Patent Issued :September 30, 2003
Title :FUSION PROTEINS OF MYCOBACTERIUM TUBERCULOSIS ANTIGENS AND THEIR USES

Re: Request for Reconsideration for a Certificate of Correction

Consideration has been given your request for the issuance of a certificate of correction for the above-identified patent.

Respecting the alleged errors noted in your request, the examiner has considered applicants' arguments, but does not find them persuasive for the reasoning. Please see attached Detailed Action.

In view of the foregoing your request is again hereby denied.

Magdalene Talley
For Mary Diggs Supervisor
Decisions and Certificate of Correction Branch
(703)308-9390 ext.116

Townsend & Townsend and Crew LLP
Two Embarcadero Center, 8Th Floor.
San Francisco, CA 94111-3834

MD/mt

DETAILED ACTION

1. Applicants' Second Request for Certificate of Correction under 37 CFR 1.323, received 25 January 2008, is acknowledged.

Response to Argument

2. Applicants argue that the denial of the first Certificate of Correction is improper. there is a common basis for the sequences in the Figures and Sequence Listings: the informal drawings filed in the parent application. Thus, a Certificate of Correction for correcting errors in the Sequence Listings does not introduce new matter and is equally grantable as a Certificate of Correction for correcting errors in the Figures.

The examiner has considered applicants' arguments, but does not find them persuasive for the reasoning put forth in the response to the first request. The basis of that response was the Computer Readable File and paper Sequence Listing submitted at the time of filing. The correction of the figures was approved based upon the originally filed CRF and paper Sequence Listing. However, the request for correction of SEQ ID NO:1 and SEQ ID NO:2 was not approved because the originally filed CRF and paper copy lists the sequences, as printed in the Patent.

Thus, this request for Correction is denied.

UNITED STATES PATENT AND TRADEMARK OFFICE

Commissioner for Patents
United States Patent and Trademark Office
P.O. Box 1450
Alexandria, VA 22313-1450

Date Mailed : February 2, 2009
Serial No. :10/684548
Patent No. 6,627,198 B2
Patent Issued :September 30, 2003
Title :FUSION PROTEINS OF MYCOBACTERIUM TUBERCULOSIS ANTIGENS AND THEIR USES

Re: Request for Reconsideration for a Certificate of Correction

Consideration has been given your request for the issuance of a certificate of correction for the above-identified patent.

Respecting the alleged errors noted in your request, the examiner has considered applicants' arguments, but does not find them persuasive for the reasoning. Please see attached Detailed Action.

In view of the foregoing your request is again hereby denied.

Magdalene Talley
For Mary Diggs Supervisor
Decisions and Certificate of Correction Branch
(703)308-9390 ext.116

Townsend & Townsend and Crew LLP
Two Embarcadero Center, 8Th Floor.
San Francisco, CA 94111-3834

MD/mt

UNITED STATES PATENT AND TRADEMARK OFFICE

Commissioner for Patents
United States Patent and Trademark Office
P.O. Box 1450
Alexandria, VA 22313-1450
www.uspto.gov

LATHROP & GAGE LC
2345 GRAND AVENUE
SUITE 2800
KANSAS CITY, MO 64108

COPY MAILED
JUL 13 2006
OFFICE OF PETITIONS

In re Application of

Richard B. Mindlin

Application No. 10/684,609

Filed: October 14, 2003

Attorney Docket No. 413333

DECISION ON PETITION

This is a decision on the petition under 37 CFR §1.137(b), June 27, 2006, to revive the above-identified application.

The petition is **granted**.

This application became abandoned for failure to timely remit the issue fee of $700.00 and the publication fee of $300.00 as required by the Notice of Allowance and Issue Fee Due (the "Notice") mailed December 16, 2005. The Notice set forth a three (3) month statutory period for reply. No response was received within the allowable period. Accordingly, this application became abandoned on March 17, 2006.

The issue fee and publication fee were received on June 27, 2006.

Form PTOL-85B, filed June 27, 2006, is noted and made of record.

The application is being directed to the Office of Patent Publications for further processing.

Telephone inquiries concerning this decision may be directed to the undersigned at (571) 272-3222.

Kenya A. McLaughlin
Petitions Attorney
Office of Petitions

UNITED STATES PATENT AND TRADEMARK OFFICE

UNITED STATES DEPARTMENT OF COMMERCE
United States Patent and Trademark Office
Address: COMMISSIONER FOR PATENTS
P.O. Box 1450
Alexandria, Virginia 22313-1450
www.uspto.gov

FRASER CLEMENS MARTIN & MILLER LLC
28366 KENSINGTON LANE
PERRYSBURG, OH 43551

Mail Date: 04/20/2010

Applicant	: Frank E. Semersky	: DECISION ON REQUEST FOR
Patent Number	: 7588810	: RECALCULATION of PATENT
Issue Date	: 09/15/2009	: TERM ADJUSTMENT IN VIEW
Appliction No	: 10/684,611	: OF WYETH AND NOTICE OF INTENT TO
Filed	: 10/14/2003	: ISSUE CERTIFICATE OF CORRECTION
		:

The Request for Recalculation is **GRANTED** to the extent indicated.

The patent term adjustment has been determined to be **0** days. The USPTO will *sua sponte* issue a certificate of correction reflecting the amount of PTA days determined by the recalculation.

Prior to the issuance of the certificate of correction, the USPTO will afford patentee an opportunity to be heard and request reconsideration. Accordingly, patentee has **one month or thirty (30) days**, whichever is longer, to file a request for reconsideration of this patent term adjustment calculation. See 35 U.S.C. 154(b)(3)(B)(ii) and 37 CFR 1.322(a)(4). No extensions of time will be granted under 37 CFR 1.136.

Patentee should use document code PET.OP if electronically filing a request for reconsideration of this patent term adjustment calculation. The patentee must also include the information required by 37 CFR 1.705(b)(2) and the fee required by 37 CFR 1.18(e). If patentee does not file a timely request for reconsideration of this patent term adjustment calculation including the information required by 37 CFR 1.705(b)(2) and the fee required by 37 CFR 1.18(e), the USPTO will issue a certificate of correction reflecting the PTA determination noted above.

Patentee should be aware that in order to preserve the right to review in the United States District Court for the District of Columbia of the USPTO patent term adjustment determination, patentee must ensure that he or she also take the steps required under 35 U.S.C. 154(b)(4)(A) in a timely manner. Nothing in the request for recalculation should be construed as providing an alternative time frame for commencing a civil action under 35 U.S.C. 154(b)(4)(A).

Any questions concerning this decision should be directed to the Office of Patent Legal Administration at 571-272-7702.

UNITED STATES PATENT AND TRADEMARK OFFICE

Commissioner for Patents
United States Patent and Trademark Office
P.O. Box 1450
Alexandria, VA 22313-1450
www.uspto.gov
DIW Jun-05

RALPH CORSINI
5 MACKAY RD.
BAY SHORE NY 11706

COPY MAILED

JUN 2 8 2005

OFFICE OF PETITIONS

In re Application of	:	
Ralph Corsini	:	
Application No. 10/684,613	:	DECISION ON PETITION
Filed: 14 October, 2003	:	
For: INTEGRATED FACEMASK	:	
FIREFIGHTING HOOD PACKING	:	
SYSTEM	:	

This is a decision on the petition filed on 7 June, 2005, under 37 CFR 1.137(b),[1] to revive the above-identified application.

The petition is **GRANTED**.

---

[1] Effective December 1, 1997, the provisions of 37 CFR 1.137(b) now provide that where the delay in reply was unintentional, a petition may be filed to revive an abandoned application or a lapsed patent pursuant to 37 CFR 1.137(b). A grantable petition filed under the provisions of 37 CFR 1.137(b) must be accompanied by:

(1) the required reply, unless previously filed. In a nonprovisional application abandoned for failure to prosecute, the required reply may be met by the filing of a continuing application. In a nonprovisional application filed on or after June 8, 1995, and abandoned for failure to prosecute, the required reply may also be met by the filing of a request for continued examination in compliance with § 1.114. In an application or patent, abandoned or lapsed for failure to pay the issue fee or any portion thereof, the required reply must be the payment of the issue fee or any outstanding balance thereof. In an application abandoned for failure to pay the publication fee, the required reply must include payment of the publication fee.

(2) the petition fee as set forth in 37 CFR 1.17(m);

(3) a statement that the entire delay in filing the required reply from the due date for the reply until the filing of a grantable petition pursuant to 37 CFR 1.137(b) was unintentional. The Commissioner may required additional information where there is a question whether the delay was unintentional; and

(4) any terminal disclaimer (and fee as set forth in 37 CFR 1.20(d)) required pursuant to 37 CFR 1.137(c)).

The application became abandoned on 31 December, 2004, for failure to submit a reply to the non-final Office action mailed on 30 September, 2004, which set a three (3) month statutory period for reply. Petitioner attempted to file an amendment and a three (3) month extension of time on 31 March, 2005, however, that reply was untimely. Notice of Abandonment was mailed on 3 June, 2005.

Petitioner requests that the fee for the untimely extension of time on 31 March, 2005, be applied towards the petition fee. In this regard, an extension of time under 37 CFR 1.136 must be filed prior to the expiration of the maximum extendable period for reply.[2] As the extension of time filed on 31 March, 2005, was filed after the maximum extendable period for reply to the Notice mailed on 30 September, 2004, the fee is unnecessary and it is appropriate to apply it towards the petition fee. As such, the $510.00 paid on 31 March, 2005, will be applies towards the petition fee of $750.00.

This application is being referred to Technology Center 3765 for further processing.

Telephone inquiries concerning this matter may be directed to the undersigned at (571) 272-3231.

D Wood

Douglas I. Wood
Senior Petitions Attorney
Office of Petitions

[2] See In re Application of S., 8 USPQ2d 1630, 1631 (Comm'r Pats. 1988).

UNITED STATES PATENT AND TRADEMARK OFFICE

Commissioner for Patents
United States Patent and Trademark Office
P.O. Box 1450
Alexandria, VA 22313-1450
www.uspto.gov
DIW Mar-06

RALPH CORSINI
5 MACKAY RD.
BAY SHORE NY 11706

COPY MAILED

MAR 1 4 2006

OFFICE OF PETITIONS

In re Application of	:	
Ralph Corsini	:	
Application No. 10/684,613	:	DECISION ON PETITION
Filed: 14 October, 2003	:	
For: INTEGRATED FACEMASK	:	
FIREFIGHTING HOOD PACKING	:	
SYSTEM	:	

This is a decision on the petition filed on 14 February, 2006, under 37 CFR 1.137(b),[1] to revive the above-identified application.

The petition is **GRANTED**.

The application became abandoned on 3 February, 2006, for failure to timely submit the issue and publication fees in response to the Notice of Allowance and Fee(s) Due mailed on 2 November, 2005, which set a three (3) month statutory period for reply.

---

[1] Effective December 1, 1997, the provisions of 37 CFR 1.137(b) now provide that where the delay in reply was unintentional, a petition may be filed to revive an abandoned application or a lapsed patent pursuant to 37 CFR 1.137(b). A grantable petition filed under the provisions of 37 CFR 1.137(b) must be accompanied by:

(1) the required reply, unless previously filed. In a nonprovisional application abandoned for failure to prosecute, the required reply may be met by the filing of a continuing application. In a nonprovisional utility or plant application filed on or after June 8, 1995, and abandoned for failure to prosecute, the required reply may also be met by the filing of a request for continuing examination in compliance with § 1.114. In an application or patent, abandoned or lapsed for failure to pay the issue fee or any portion thereof, the required reply must be the payment of the issue fee or any outstanding balance thereof. In an application abandoned for failure to pay the publication fee, the required reply must include payment of the publication fee.

(2) the petition fee as set forth in 37 CFR 1.17(m);

(3) a statement that the entire delay in filing the required reply from the due date for the reply until the filing of a grantable petition pursuant to 37 CFR 1.137(b) was unintentional. The Commissioner may required additional information where there is a question whether the delay was unintentional; and

(4) any terminal disclaimer (and fee as set forth in 37 CFR 1.20(d)) required pursuant to 37 CFR 1.137(c)).

The filing of the present petition precedes the mailing of Notice of Abandonment.

The application is being forwarded to Technology Center Art Unit 3765 for consideration of the amendment filed under 37 CFR 1.312.

Telephone inquiries concerning this matter may be directed to the undersigned at (571)272-3231.

D Wood

Douglas I. Wood
Senior Petitions Attorney
Office of Petitions

UNITED STATES PATENT AND TRADEMARK OFFICE

COMMISSIONER FOR PATENTS
UNITED STATES PATENT AND TRADEMARK OFFICE
WASHINGTON, DC 20231
www.uspto.gov

Ralph Corsini
5 Mackay Rd.
Bay Shore, NY 11706

OCT 20 2006

Art Unit 3765

In re Application of	:	
CORSINI	:	
Serial No. 10/684,613	:	DECISION ON PETITION
Filed: October 14, 2003	:	
For: Integrated Facemask Firefighting Hood Packing System	:	

This is a decision to petitioner's request to permit color photographs filed October 14, 2003.

Under 37 CFR 1.84(a)(2), the petitioner must file (i) the fee set forth in 37 CFR 1.17(h), (ii) three (3) sets of color photographs and (iii) an amendment to the specification, if necessary. Petitioner has satisfied the requirements of (i) and (iii) above but did not provide three (3) sets of color photographs.

The use of color photographs is provided in MPEP 608.02 with reference to color drawings as part of 37 CFR 1.84(a)(2), the rule states "on rare occasions, color drawings may be necessary as the **only** practical medium by which to disclose the subject matter to be sought to be patented in a utility ...application."

If petitioner had complied with the requirements of 37 CFR 1.84(a)(2)(ii) as noted above, the Office believes that color photographs are not the only medium by which the subject matter to be patented can be disclosed.

The petition is denied.

Gary L. Welch
Supervisory Patent Examiner
Art Unit 3765
(571) 272-4996
(571) 273-4996 fax

UNITED STATES PATENT AND TRADEMARK OFFICE

COMMISSIONER FOR PATENTS
UNITED STATES PATENT AND TRADEMARK OFFICE
P.O. BOX 1450
ALEXANDRIA, VA 22313-1450
www.uspto.gov

Richard T. Lyon
Lyon & Harr, LLP
300 Esplanade Drive
Suite 800
Oxnard, CA 93036

MAILED

DEC 21 2004

Technology Center 2100

In re Application of: Gemmell, et al.
Application No. 10/684,620
Filed: October 14, 2003
For: SYSTEM AND PROCESS FOR PRESENTING SEARCH RESULTS IN A HISTOGRAM/CLUSTER FORMAT

DECISION ON PETITION UNDER 37 C.F.R. § 1.84(a)(2) TO ACCEPT COLOR DRAWINGS

This is a decision on the petition under 37 C.F.R. § 1.84(a)(2), filed March 18, 2004, requesting acceptance of color drawings.

The petition requests that the color drawings, although not specifically identified but noted as figures 3-6, be accepted in lieu of black and white drawings.

A grantable petition under 37 C.F.R. § 1.84(a)(2) must be accompanied by a fee set forth under 37 C.F.R. § 1.17(h), 3 (three) sets of the color drawings in question, and the specification must contain, or be amended to contain, the following language as the first paragraph in that portion of the specification relating to the brief description of the drawings:

*"The patent or application file contains at least one drawing executed in color. Copies of this patent **or patent application publication** with color drawing(s) will be provided by the Patent and Trademark Office upon request and payment of the necessary fee."*

The petition was filed without the required (complete) specification statement, as noted above. In addition, at the time of this decision, the indicated sets of color drawings, have not reached the file.

The petition is **DENIED**.

Petitioner is given one opportunity to perfect the petition. Any request for reconsideration must be filed within TWO MONTHS of the mail date of this decision.

Brian L. Johnson
Special Program Examiner
Technology Center 2100
Computer Architecture, Software and Information Security
703-308-0885

BLJ/12/20/04

UNITED STATES PATENT AND TRADEMARK OFFICE

COMMISSIONER FOR PATENTS
UNITED STATES PATENT AND TRADEMARK OFFICE
P.O. BOX 1450
ALEXANDRIA, VA 22313-1450
www.uspto.gov

MICROSOFT CORPORATION
C/O LYON & HARR, LLP
300 ESPLANADE DRIVE
Suite 800
Oxnard, CA 93036

MAILED

DEC 03 2007

Technology Center 2100

In re Application of: Gemmell, et al.
Application No. 10/684,620
Filed: October 14, 2003
For: SYSTEM AND PROCESS FOR PRESENTING SEARCH RESULTS IN A HISTOGRAM/CLUSTER FORMAT

DECISION ON PETITION UNDER 37 C.F.R. § 1.84(a)(2) TO ACCEPT COLOR DRAWINGS

This is a decision on the renewed petition under 37 C.F.R. § 1.84(a)(2), filed January 5, 2005, requesting acceptance of color drawings. The original petition was filed on March 18, 2004 and dismissed in a decision mailed on December 21, 2004. The delay in decision on the instant petition is regretted.

The petition requests that the color drawings be accepted in lieu of black and white drawings.

A grantable petition under 37 C.F.R. § 1.84(a)(2) must be accompanied by a fee set forth under 37 C.F.R. § 1.17(h), three (3) sets of the color drawings in question, a black and white photocopy of said drawings, and the specification must contain, or be amended to contain, the following language as the first paragraph in that portion of the specification relating to the brief description of the drawings:

*"The patent or application file contains at least one drawing executed in color. Copies of this patent **or patent application publication** with color drawing(s) will be provided by the Patent and Trademark Office upon request and payment of the necessary fee."*

The original petition was filed with the required fee. The sets of color drawings have been located and the specification at page 7, line 16, has been amended to contain the notification described above.

Accordingly, the renewed petition is **GRANTED**.

Brian L. Johnson, (571) 272-3595
Quality Assurance Specialist, Technology Center 2100
Computer Architecture, Software and Information Security

UNITED STATES PATENT AND TRADEMARK OFFICE

Commissioner for Patents
United States Patent and Trademark Office
P.O. Box 1450
Alexandria, VA 22313-1450
www.uspto.gov

PEARNE & GORDON LLP
1801 EAST 9TH STREET, SUITE 1200
CLEVELAND, OH 44114-3108

COPY MAILED

JAN 11 2006

OFFICE OF PETITIONS

In re Application of	:	
Seiya Yamaguchi et al	:	
Application No. 10/684,631	:	DECISION GRANTING PETITION
Filed: October 14, 2003	:	UNDER 37 CFR 1.313(c)(2)
Attorney Docket No. 36193	:	

This is a decision on the petition, filed January 10, 2006, under 37 CFR 1.313(c)(2) to withdraw the above-identified application from issue after payment of the issue fee.

The petition is **GRANTED**.

The above-identified application is withdrawn from issue for consideration of a submission under 37 CFR 1.114 (request for continued examination). See 37 CFR 1.313(c)(2).

Petitioner is advised that the issue fee paid on November 21, 2005 in the above-identified application cannot be refunded. If, however, the above-identified application is again allowed, petitioner may request that it be applied towards the issue fee required by the new Notice of Allowance.[1]

Telephone inquiries should be directed to the undersigned at (571) 272-3218.

This matter is being referred to Technology Center AU 2643 for processing of the request for continued examination under 37 CFR 1.114 and for consideration of the Information Disclosure Statement.

Frances Hicks
Petitions Examiner
Office of Petitions

---

[1] *The request to apply the issue fee to the new Notice may be satisfied by completing and returning the new Issue Fee Transmittal Form PTOL-85(b) (along with any balance due at the time of payment), which includes the following language thereon: "Commissioner for Patents is requested to apply the Issue Fee and Publication Fee (if any) or re-apply any previously paid issue fee to the application identified above." Petitioner is advised that, whether a fee is indicated as being due or not, the Issue Fee Transmittal Form* ***must*** *be completed and timely submitted to avoid abandonment. Note the language in bold text on the first page of the Notice of Allowance and Fee(s) Due (PTOL-85).*

UNITED STATES PATENT AND TRADEMARK OFFICE

Commissioner for Patents
United States Patent and Trademark Office
P.O. Box 1450
Alexandria, VA 22313-1450
www.uspto.gov

KNOBBE MARTENS OLSON & BEAR LLP
2040 MAIN STREET
FOURTEENTH FLOOR
IRVINE, CA 92614

COPY MAILED

NOV 03 2004

OFFICE OF PETITIONS

In re Application of :
Kawahara, Mikio :
Application No. 10/684,638 : ON PETITION
Filed: October 14, 2003 :
Attorney Docket No. KOD43A.002AUS :

This is a notice regarding your request for acceptance of a fee deficiency submission under 37 CFR 1.28. On September 1, 1998, the Court of Appeals for the Federal Circuit held that 37 CFR 1.28(c) is the sole provision governing the time for correction of the erroneous payment of the issue fee as a small entity. **See DH Technology v. Synergystex International, Inc. 154 F.3d 1333, 47 USPQ2d 1865 (Fed. Cir. Sept. 1, 1998).**

The Office no longer investigates or rejects original or reissue applications under 37 CFR 1.56. **1098 Off. Gaz. Pat. Office 502 (January 3, 1989)**. Therefore, nothing in this Notice is intended to imply that an investigation was done.

Your fee deficiency submission under 37 CFR 1.28 is hereby **ACCEPTED**.

Inquiries related to this communication should be directed to the undersigned at (571) 272-3282.

Liana Chase
Petitions Examiner
Office of Petitions
Office of the Deputy Commissioner
for Patent Examination Policy

UNITED STATES PATENT AND TRADEMARK OFFICE

Commissioner for Patents
United States Patent and Trademark Office
P.O. Box 1450
Alexandria, VA 22313-1450
www.uspto.gov

Mailed: 7/18/05

NE

In re application of
Alonzo Beasley, Jr.
Serial No. 10/684,639
Filed: October 14, 2003
For: MOTOR VEHICLE AIR BAG
AND FABRIC FOR USE IN SAME

DECISION ON
PETITION

This is a response to the PETITION TO WITHDRAW HOLDING OF ABANDONMENT filed February 18, 2005. The petition requests that the abandonment, as set forth in the Notice of Abandonment of February 3, 2005, for failure to timely file a proper reply to the Office letter mailed July 29, 2004, be withdrawn since applicants did timely file a reply on January 31, 2005.

DECISION

The instant request has been accepted as a petition to withdraw the holding of abandonment under the provisions of 37 CFR 1.181 (no fee) - no abandonment-in-fact. A review of the evidence presented reveals that applicant's response, the paper entitled RESPONSE, was properly filed on January 31, 2005. The evidence provided includes a completed Certificate of Mailing dated January 31,2005. Any holding of abandonment for failure to timely file a proper reply to the Office letter mailed February 3, 2005, therefore, is hereby vacated.

In view of the Notice of Rescinded Abandonment mailed by the USPTO on February 15, 2004, the application was returned to pending status. Accordingly, the Petition is **DISMISSED**.

Jacqueline Stone, Director
Technology Center 1700
Chemical and Materials Engineering

NELSON MULLINS RILEY & SCARBOROUGH LLP
P.O. Box 11070
Columbia, SC 29211

UNITED STATES PATENT AND TRADEMARK OFFICE

COMMISSIONER FOR PATENTS
UNITED STATES PATENT AND TRADEMARK OFFICE
P.O. BOX 1450
ALEXANDRIA, VA 22313-1450
www.uspto.gov

JJGJr: 03-04

Paper No: __

WHITHAM, CURTIS
& CHRISTOFFERSON, PC
SUITE 340
11491 SUNSET HILLS ROAD
RESTON VA 20190

COPY MAILED

APR 0 1 2004

OFFICE OF PETITIONS

In re Application of:	:	
Tresser	:	ON PETITION
Filed: 15 October, 2003	:	
Application No. 10/684,641	:	
Docket No.: 00280757aa	:	

This is a decision on the petition filed on 8 March, 2004, and considered as seeking to have accorded to Page 5 of the specification (description and claims) of the instant application a filing date of 15 October, 2003.

The petition is **GRANTED**, and the petition fee ($130.00) is refunded via Treasury check.

The application was deposited on 15 October, 2003.

On 25 February, 2004, the Office mailed a Notice of Omitted Items in a Nonprovisional Application (the Notice), and indicated therein that "Page(s) 5 of the specification (description and claims)" appeared to have been omitted. Petitioner also was informed that he/she could accept the application as filed, or seek either to: (a) have accorded to the entire application the filing date on which the omitted item was supplied, or (b) have a determination that the omitted item was present on filing.

Thereafter, on 8 March, 2004, C. Lamont Whitham (Reg. No. 22,424) filed the instant petition, and therewith supplied:

- a copy of the receipt card (see: MPEP §503) evidencing the filing by hand on 15 October, 2003, of the instant application containing, *inter alia*: "Docket No 00280757aa . . . In re patent application of Charles P. Tresser . . . For Error Diffusion w/Averaged Directional Biases . . . 27 Pages in Specification . . . 43 No. of claims [2 independent . . .] . . . 4 Sheets of Drawings formal . . . Abstract . . . Transmittal Sheet . . . Fee Calculation Form . . . Combined Declaration and Power of Attorney . . . Assignment . . . Recordation Form Cover Sheet . . . Information Disclosure Statement . . . PTO-1449 and associated art (13 docs.) . . . Other: Assoc. Power of Atty Fees $1224 Deposit Account NO (if applicable) 50-0510 (IBM Yorktown) (1184.- filing fee; 40.- Assignment charge) . . . Atty:Asst. CLW"; and

- a copy of a document purporting to be Page 5 of the specification (description and claims);

- Petitioner's statement incorporated into the petition.

A review of the application papers reveals that the application in fact was filed and received in the Office on 15 October, 2003, and that a comparison of the date-stamped (15 October, 2003) copy of the receipt card filed by Petitioner and the contents of the file indicate that the file contains, *inter alia*, specification pages 1 - 4 and 6 - 19 (description), 20 - 26 (claims), and 27 (abstract), with 4 sheets of drawings (Figs. 1a, 1b, 2 and 3) (as described in the specification).

Because the return postcard receipt properly itemizes the contents of the application package in accordance with MPEP §503, the Office concludes that Page 5 of the specification (description and claims) was submitted on 15 October, 2003, and subsequently was misplaced in the Office.

Accordingly, the petition under 37 C.F.R. §1.53 is **granted**.

The Notice mailed on 25 February, 2004, hereby is withdrawn as to Page 5 of the specification (description and claims).

This application is released to the Office of Initial Patent Examination for further processing with a filing date of 15 October, 2003, using:

- specification pages 1 - 4 and 6 - 19 (description), 20 - 26 (claims), and 27 (abstract), with 4 sheets of drawings (Figs. 1a, 1b, 2 and 3) (as described in the specification), deposited on 15 October, 2003; and

- page 5 of the specification (description/claims), deposited on 8 March, 2004; and

- further with direction to OIPE to correct Office records to reflect that four 27 pages of

specification (description, claims and abstract) and 4 sheets of drawings were present on filing on 15 October, 2003; and forward to Petitioner a copy of the corrected filing receipt reflecting a filing date of 15 October, 2003, reflecting therein that 27 pages of specification (description, claims and abstract) and four (4) sheets of drawings were present on filing.

Thereafter, the application will be considered by the examiner in due course.

Telephone inquiries concerning this decision may be directed to the undersigned at (703)305-9199.

John J. Gillon, Jr.
Senior Attorney
Office of Petitions

UNITED STATES PATENT AND TRADEMARK OFFICE

Commissioner for Patents
United States Patent and Trademark Office
P.O. Box 1450
Alexandria, VA 22313-1450
www.uspto.gov

MICHAEL G. GILMAN, P.C.
424 LANTANA PARK
LEXINGTON KY 40515

COPY MAILED

SEP 0 8 2008

OFFICE OF PETITIONS

In re Application of :
Tsukidate :
Application No. 10/684,643 : DECISION
Filed 15 October, 2003 :
Attorney Docket No. 041-2057C :

This is a decision on the petition, filed on 25 July, under 37 C.F.R. §1.137(a)[1] for revival of an application abandoned due to unavoidable delay.

The petition under 37 C.F.R. §1.137(a) is **DISMISSED**.

Any further petition to revive must be submitted within TWO (2) MONTHS from the mail date of this decision. Extensions of time under 37 C.F.R. §1.136(a) are permitted. The reconsideration request should include a cover letter entitled "Renewed Petition under 37 C.F.R. §1.137(a)."

Petitioner's alternative is to file a petition under 37 C.F.R. §1.137(b), discussed below.

This is **not** a final agency action within the meaning of 5 U.S.C.§704.

[1] A review of the extensive discussion at/in the guidance set forth in the commentary at MPEP §711.03(c)(I)(A) and (B) might suggest that the factual averments set forth in the instant petition may be appropriate for a petition (no fee) to withdraw the holding of abandonment and consideration under 37 C.F.R. §1.181. However, Petitioner's failure to seek relief timely under the rule (within two (2) months of the action complained of (Notice of Abandonment) leaves Petitioner with a petition to revive under the provisions of 37 C.F.R. §1.137(a) or (b) as the proper route to obtain a return to pending status for the instant application.

As to Allegations of
Unavoidable Delay

The requirements of a grantable petition pursuant to 37 C.F.R. §1.137(a) are the petition and fee therefor, a reply, a proper showing of unavoidable delay under the regulation, and, where applicable, a terminal disclaimer and fee. (However, it does not appear that a terminal disclaimer and fee are due here.)

It is noted from the outset that Petitioner's papers are problematic, *inter alia*, in that the relief alternatives that Petitioner seeks appear to be several and the showing(s) that Petitioner submits are not fully and separately set forth as required under the Rules of Practice. (37 C.F.R. §1.4(b).)

Petitioner entitles the instant petition as one "[t]o [r]evive," however, Petitioner seeks relief under two separate provisions of the regulation—i.e., 37 C.F.R. §1.137(a) and §1.137(b), with the specifics of the request as to the latter left to little more than authorization of fees. Moreover, Petitioner seems to seek other relief for which a fee might not be required. Yet Petitioner is unspecific as to those details and fails to approach the matter as set forth by the guidance in the Commentary in the Manual of Patent Examining Procedure at MPEP §711.03(c) as to any of these alternatives. Such an approach is inconsistent with the duties outlined in *ex parte Pratt*.[2]

It is not proper for Office to attempt to guess at or otherwise interpret Petitioner's wishes as to relief sought herein, and the Office will not do so. Rather, the Office will limit this review to the provisions of 37 C.F.R. §1.137(a)—and the Office acts on the authorization to charge Deposit Account 50-3406 for that necessary fee.

The Office will not follow out at this writing Petitioner's generalized authorizations to charge additional fees for alternative form(s) of relief that may not be necessary.

Petitioner again is reminded that each transaction should be set forth in a separate paper as provided under the Rules of Practice. (37 C.F.R. §1.4(b) and (c).)

Rather, the Office notes that the requirements for a petition under the provisions of 37 C.F.R. §1.137(a) are set forth above (and in the regulation as well as in the discussion at available at MPEP §711.03(c), both of which are available online at the Office website (www.uspto.gov), and those requirements include not only the petition, fee and showing of unavoidable delay, but also the required reply to the Office action to which Petitioner failed to respond. This requirement remains outstanding as of this writing. Petitioner further is reminded that the

---

[2] Ex parte Pratt, 1887 Dec. Comm'r Pat. 31, 32-33 (Comm'r Pat. 1887) (the term "unavoidable" "is applicable to ordinary human affairs, and requires no more or greater care or diligence than is generally used and observed by prudent and careful men in relation to their most important business"); In re Mattullath, 38 App. D.C. 497, 514-15 (D.C. Cir. 1912); Ex parte Henrich, 1913 Dec. Comm'r Pat. 139, 141 (Comm'r Pat. 1913).

appropriate forms for petitions under 37 C.F.R. §1.137(a) and (b) are available online as well at the Office website (www.uspto.gov). (Copies are enclosed herewith.)

Petitioner argues that the Office failed to track his series of Notices of Change of Address, and the Office notes that the substance of Petitioner's 13 November, 2005, Notice as to mailing address now has been entered.

Petitioner also is reminded that a practitioner/applicant who obtains a Customer Number and associates his/her/their application(s) with that Customer Number—as set forth in the MPEP and the Office website—may then be able to review at any time and online the status and condition of the their application(s), and so ease the diligence burden upon a practitioner/applicant as to attention to his/her/their applications under prosecution before the Office.

BACKGROUND

The record reflects as follows:

Petitioner failed to reply timely and properly to the non-final Office action (copy enclosed herewith) mailed on 1 November, 2007, with reply due absent extension of time on or before 1 February, 2008.

The instant application went abandoned by operation of law after midnight 1 February, 2008.

The Office mailed the Notice of Abandonment (copy enclosed) on 3 July, 2008.

Petitioner filed the instant petition on 25 July, 2008, averring inter alia, nonreceipt, but failing to provide documentary support (e.g., a copy of the docket record/file jacket cover for the instant application and discussion of Petitioner's docketing and calendaring system and a copy of the reply due-date calendar in support of the averments, as discussed at MPEP §711.03(c)).

Petitioner argues that the Office failed to track his series of Notices of Change of Address—the substance of Petitioner's 13 November, 2005, Notice as to mailing address now has been entered.

The Office notes that the requirements for a petition under the provisions of 37 C.F.R. §1.137(a) are set forth above, in the regulation and at MPEP §711.03(c).Those requirements include not only the petition, fee and showing of unavoidable delay, but also the required reply to the Office action to which Petitioner failed to respond, and this requirement remains outstanding as of this writing.

(It is noted that roughly during some fifty-seven (57) months between the date of deposit of the instant application the filing of the instant petition, Petitioner filed one Status Inquiry as to the instant application.)

Out of an abundance of caution, Petitioners always are reminded that those registered to practice and all others who make representations before the Office are reminded to inquire into the underlying facts of representations made to the Office and support averments with the appropriate documentation–since all owe to the Office the continuing duty to disclose.[3]

The availability of applications and application papers online to Petitioners/practitioners who diligently associate their Customer Number with the respective application(s) now provides practitioners on-demand information as to events/transactions in an application.

As to Allegations of
Unavoidable Delay

The requirements under 37 C.F.R. §1.137(a) have not been satisfied as of this writing in that Petitioner failed to submit (the documentary showing and) the reply required.

CONCLUSION

Accordingly, The petition under 37 C.F.R. §1.137(a) is **dismissed**.

ALTERNATIVE VENUE

Petitioner may file a petition under 37 C.F.R. §1.137(b) and aver unintentional delay. (See: http://www.uspto.gov/web/offices/pac/mpep/documents/0700_711_03_c.htm#sect711.03c)

A petition to revive on the grounds of unintentional delay must be filed promptly and such petition must be accompanied by the reply, the petition fee, a statement that "the entire delay in filing the required reply from the due date for the reply until the filing of a grantable petition was unintentional" (the statement is in the form available online), and a terminal disclaimer and fee where appropriate.

Further correspondence with respect to this matter should be addressed as follows:

By Mail: Mail Stop PETITION
Commissioner for Patents
P. O. Box 1450
Alexandria, VA 22313-1450

[3] See supplement of 17 June, 1999. The Patent and Trademark Office is relying on Petitioner's duty of candor and good faith and accepting a statement made by Petitioner. See Changes to Patent Practice and Procedure, 62 Fed. Reg. at 53160 and 53178, 1203 Off. Gaz. Pat. Office at 88 and 103 (responses to comments 64 and 109)(Petitioner obligated under 37 C.F.R. §10.18 to inquire into the underlying facts and circumstances when providing statements to the Patent and Trademark Office).

By hand: U. S. Patent and Trademark Office
Customer Service Window, Mail Stop Petitions
Randolph Building
401 Dulany Street
Alexandria, VA 22314

By facsimile: **(571) 273-8300**
Attn: Office of Petitions

While telephone inquiries regarding this decision may be directed to the undersigned at (571) 272-3214, it is noted that all practice before the Office is in writing (see: 37 C.F.R. §1.2[4]) and the proper authority for action on any matter in this regard are the statutes (35 U.S.C.), regulations (37 C.F.R.) and the commentary on policy (MPEP). Therefore, no telephone discussion may be controlling or considered authority for Petitioner's action(s).

/John J. Gillon, Jr./
John J. Gillon, Jr.
Senior Attorney
Office of Petitions

[4] The regulations at 37 C.F.R. §1.2 provide:

§1.2 Business to be transacted in writing.

All business with the Patent and Trademark Office should be transacted in writing. The personal attendance of Petitioners or their attorneys or agents at the Patent and Trademark Office is unnecessary. The action of the Patent and Trademark Office will be based exclusively on the written record in the Office. No attention will be paid to any alleged oral promise, stipulation, or understanding in relation to which there is disagreement or doubt.

UNITED STATES PATENT AND TRADEMARK OFFICE

UNITED STATES DEPARTMENT OF COMMERCE
United States Patent and Trademark Office
Address: COMMISSIONER FOR PATENTS
P.O. Box 1450
Alexandria, Virginia 22313-1450
www.uspto.gov

APPLICATION NO.	FILING DATE	FIRST NAMED INVENTOR	ATTORNEY DOCKET NO.	CONFIRMATION NO.
10/684,643	10/15/2003	Ryota Tsukidate	041-2057C	3199

7590 11/01/2007

MICHAEL G. GILMAN, P.C.
5522 RIVA RIDGE DRIVE
WESLEY CHAPEL, FL 33544

EXAMINER	
ONUAKU, CHRISTOPHER O	
ART UNIT	**PAPER NUMBER**
2621	

MAIL DATE	DELIVERY MODE
11/01/2007	PAPER

Please find below and/or attached an Office communication concerning this application or proceeding.

The time period for reply, if any, is set in the attached communication.

Office Action Summary	Application No.	Applicant(s)	
	10/684,643	TSUKIDATE, RYOTA	
	Examiner	Art Unit	
	Christopher Onuaku	2621	

-- The MAILING DATE of this communication appears on the cover sheet with the correspondence address --

Period for Reply

A SHORTENED STATUTORY PERIOD FOR REPLY IS SET TO EXPIRE 3 MONTH(S) OR THIRTY (30) DAYS, WHICHEVER IS LONGER, FROM THE MAILING DATE OF THIS COMMUNICATION.

- Extensions of time may be available under the provisions of 37 CFR 1.136(a). In no event, however, may a reply be timely filed after SIX (6) MONTHS from the mailing date of this communication.
- If NO period for reply is specified above, the maximum statutory period will apply and will expire SIX (6) MONTHS from the mailing date of this communication.
- Failure to reply within the set or extended period for reply will, by statute, cause the application to become ABANDONED (35 U.S.C. § 133). Any reply received by the Office later than three months after the mailing date of this communication, even if timely filed, may reduce any earned patent term adjustment. See 37 CFR 1.704(b).

Status

1)☐ Responsive to communication(s) filed on _____.

2a)☐ This action is **FINAL**. 2b)☒ This action is non-final.

3)☐ Since this application is in condition for allowance except for formal matters, prosecution as to the merits is closed in accordance with the practice under *Ex parte Quayle*, 1935 C.D. 11, 453 O.G. 213.

Disposition of Claims

4)☒ Claim(s) 42-47 is/are pending in the application.

4a) Of the above claim(s) _____ is/are withdrawn from consideration.

5)☐ Claim(s) _____ is/are allowed.

6)☒ Claim(s) 42-47 is/are rejected.

7)☐ Claim(s) _____ is/are objected to.

8)☐ Claim(s) _____ are subject to restriction and/or election requirement.

Application Papers

9)☐ The specification is objected to by the Examiner.

10)☒ The drawing(s) filed on 15 October 2003 is/are: a)☐ accepted or b)☐ objected to by the Examiner.

Applicant may not request that any objection to the drawing(s) be held in abeyance. See 37 CFR 1.85(a).

Replacement drawing sheet(s) including the correction is required if the drawing(s) is objected to. See 37 CFR 1.121(d).

11)☐ The oath or declaration is objected to by the Examiner. Note the attached Office Action or form PTO-152.

Priority under 35 U.S.C. § 119

12)☒ Acknowledgment is made of a claim for foreign priority under 35 U.S.C. § 119(a)-(d) or (f).

a)☒ All b)☐ Some * c)☐ None of:

1.☒ Certified copies of the priority documents have been received.

2.☐ Certified copies of the priority documents have been received in Application No. _____.

3.☐ Copies of the certified copies of the priority documents have been received in this National Stage application from the International Bureau (PCT Rule 17.2(a)).

* See the attached detailed Office action for a list of the certified copies not received.

Attachment(s)

1) ☒ Notice of References Cited (PTO-892)
2) ☐ Notice of Draftsperson's Patent Drawing Review (PTO-948)
3) ☒ Information Disclosure Statement(s) (PTO/SB/08) Paper No(s)/Mail Date 10/15/03&1/6/04.
4) ☐ Interview Summary (PTO-413) Paper No(s)/Mail Date. _____.
5) ☐ Notice of Informal Patent Application
6) ☐ Other: _____.

DETAILED ACTION

Claim Rejections - 35 USC § 102

1. The following is a quotation of the appropriate paragraphs of 35 U.S.C. 102 that form the basis for the rejections under this section made in this Office action:

> A person shall be entitled to a patent unless –
>
> (b) the invention was patented or described in a printed publication in this or a foreign country or in public use or on sale in this country, more than one year prior to the date of application for patent in the United States.

2. Claims 42-47 are rejected under 35 U.S.C. 102(b) as being anticipated by Vogel (US 5,253,066).

Regarding claim 42, Vogel discloses means for and methods of controlling video appliances, such as video cassette recorders or television receivers, so that selected television programs are viewed or recorded, comprising means to generate at least one piece of label information in program information related to at least one program, wherein said label information is adapted to be printed on recording medium that is adapted to have said program information recorded thereon at said at least one terminal device, and a transmitter for transmitting program data and said program information, including said label, and said at least one terminal device comprises a means for receiving said program data and said program information for each said at least one program, means for recording at least one user specified program data and program information, including said label information, related to said program, means for displaying, for each of said user specified at least one program, said at least one piece

of printable label information, related to said selected program, included in said program information, means for selecting print information print information related to said displayed piece(s) of printable label information, and means to print said selected piece(s) of printable label information (see col.3, line 24 to col.4, line 12; col.7, line 39 to col.8, line 53), here, the claimed limitations of claim1 are disclosed in Vogel; for example, in a broadcast environment, a label information (program name text) generation is disclosed, including the posting of the label information on the recording medium, this is transmitted and received, and the program and program text are accessed, the program is recorded and the text (label) is displayed on a TV receiver, using the user interface 508 connected to video processor 506 which allows the user to select whether the TV displays replayed program, the program name, or both, and the invention can be further adapted to cause the name of a program to be printed legibly.

Regarding claim 43, Vogel further discloses wherein said recording medium is removable from the recording means (see VCR), and wherein said printing means is adapted to print on a label to be put on said removable recording medium (see col.7, line 65 to col.8, line 9).

Regarding claim 44, the claimed limitations of claim 44 are accommodated in the discussions of claim 43 above.

Regarding claim 45, the claimed limitations of claim 45 are accommodated in the discussions of claim 42 above.

Regarding claim 46, the claimed limitations of claim 46 are accommodated in the discussions of claim 43 above.

Regarding claim 47, the claimed limitations of claim 47 are accommodated in the discussions of claim 44 above.

Conclusion

3. The prior art made of record and not relied upon is considered pertinent to applicant's disclosure. Perry et al (US 6,195,501) teach a system for controlling a video cassette recorder, from a personal computer.

Kwoh (US 5,852,478) teach video cassette recorder systems, including preprogramming of video cassette recorder(s).

Muguet (US 4,787,063) teaches a system transmitting special signals and data between a computer center and an appliance which ia able to receive and record independently video and/or audio programs produced by television or radio companies.

4. Any inquiry concerning this communication or earlier communications from the examiner should be directed to Christopher Onuaku whose telephone number is 571-272-7379. The examiner can normally be reached on M-F.

If attempts to reach the examiner by telephone are unsuccessful, the examiner's supervisor, John Miller can be reached on 571-272-7353. The fax phone number for the organization where this application or proceeding is assigned is 571-273-8300.

Information regarding the status of an application may be obtained from the Patent Application Information Retrieval (PAIR) system. Status information for published applications may be obtained from either Private PAIR or Public PAIR. Status information for unpublished applications is available through Private PAIR only. For more information about the PAIR system, see http://pair-direct.uspto.gov. Should you have questions on access to the Private PAIR system, contact the Electronic Business Center (EBC) at 866-217-9197 (toll-free). If you would like assistance from a USPTO Customer Service Representative or access to the automated information system, call 800-786-9199 (IN USA OR CANADA) or 571-272-1000.

COO

10/25/07.

JOHN MILLER
SUPERVISORY PATENT EXAMINER
TECHNOLOGY CENTER 2600

UNITED STATES PATENT AND TRADEMARK OFFICE

UNITED STATES DEPARTMENT OF COMMERCE
United States Patent and Trademark Office
Address: COMMISSIONER FOR PATENTS
P.O. Box 1450
Alexandria, Virginia 22313-1450
www.uspto.gov

APPLICATION NO.	FILING DATE	FIRST NAMED INVENTOR	ATTORNEY DOCKET NO.	CONFIRMATION NO.
10/684,643	10/15/2003	Ryota Tsukidate	041-2057C	3199

7590 07/03/2008

MICHAEL G. GILMAN, P.C.
5522 RIVA RIDGE DRIVE
WESLEY CHAPEL, FL 33544

EXAMINER	
ONUAKU, CHRISTOPHER O	
ART UNIT	**PAPER NUMBER**
2621	
MAIL DATE	**DELIVERY MODE**
07/03/2008	PAPER

Please find below and/or attached an Office communication concerning this application or proceeding.

The time period for reply, if any, is set in the attached communication.

Interview Summary	Application No.	Applicant(s)	
	10/684,643	TSUKIDATE, RYOTA	
	Examiner	Art Unit	
	CHRISTOPHER ONUAKU	2621	

All participants (applicant, applicant's representative, PTO personnel):

(1) *CHRISTOPHER ONUAKU*. (3)_____.

(2) *Candice Chambliss*. (4)_____.

Date of Interview: *01 July 2008*.

Type: a)☒ Telephonic b)☐ Video Conference
c)☐ Personal [copy given to: 1)☐ applicant 2)☐ applicant's representative]

Exhibit shown or demonstration conducted: d)☐ Yes e)☒ No.
If Yes, brief description: _____.

Claim(s) discussed: *None*.

Identification of prior art discussed: *None*.

Agreement with respect to the claims f)☐ was reached. g)☐ was not reached. h)☒ N/A.

Substance of Interview including description of the general nature of what was agreed to if an agreement was reached, or any other comments: *Applicant's representative informed the examiner that the case has been transferred to another company by the inventor, and that the company name is unknown to them.*.

(A fuller description, if necessary, and a copy of the amendments which the examiner agreed would render the claims allowable, if available, must be attached. Also, where no copy of the amendments that would render the claims allowable is available, a summary thereof must be attached.)

THE FORMAL WRITTEN REPLY TO THE LAST OFFICE ACTION MUST INCLUDE THE SUBSTANCE OF THE INTERVIEW. (See MPEP Section 713.04). If a reply to the last Office action has already been filed, APPLICANT IS GIVEN A NON-EXTENDABLE PERIOD OF THE LONGER OF ONE MONTH OR THIRTY DAYS FROM THIS INTERVIEW DATE, OR THE MAILING DATE OF THIS INTERVIEW SUMMARY FORM, WHICHEVER IS LATER, TO FILE A STATEMENT OF THE SUBSTANCE OF THE INTERVIEW. See Summary of Record of Interview requirements on reverse side or on attached sheet.

Examiner Note: You must sign this form unless it is an Attachment to a signed Office action.

_____
Examiner's signature, if required

Notice of Abandonment	Application No.	Applicant(s)	
	10/684,643	TSUKIDATE, RYOTA	
	Examiner	Art Unit	
	CHRISTOPHER ONUAKU	2621	

-- The MAILING DATE of this communication appears on the cover sheet with the correspondence address--

This application is abandoned in view of:

1. ☒ Applicant's failure to timely file a proper reply to the Office letter mailed on *01 November 2007*.
   (a) ☐ A reply was received on _____ (with a Certificate of Mailing or Transmission dated _____), which is after the expiration of the period for reply (including a total extension of time of _____ month(s)) which expired on _____.
   (b) ☐ A proposed reply was received on _____, but it does not constitute a proper reply under 37 CFR 1.113 (a) to the final rejection.
   (A proper reply under 37 CFR 1.113 to a final rejection consists only of: (1) a timely filed amendment which places the application in condition for allowance; (2) a timely filed Notice of Appeal (with appeal fee); or (3) a timely filed Request for Continued Examination (RCE) in compliance with 37 CFR 1.114).
   (c) ☐ A reply was received on _____ but it does not constitute a proper reply, or a bona fide attempt at a proper reply, to the non-final rejection. See 37 CFR 1.85(a) and 1.111. (See explanation in box 7 below).
   (d) ☒ No reply has been received.

2. ☐ Applicant's failure to timely pay the required issue fee and publication fee, if applicable, within the statutory period of three months from the mailing date of the Notice of Allowance (PTOL-85).
   (a) ☐ The issue fee and publication fee, if applicable, was received on _____ (with a Certificate of Mailing or Transmission dated _____), which is after the expiration of the statutory period for payment of the issue fee (and publication fee) set in the Notice of Allowance (PTOL-85).
   (b) ☐ The submitted fee of $_____ is insufficient. A balance of $_____ is due.
   The issue fee required by 37 CFR 1.18 is $_____. The publication fee, if required by 37 CFR 1.18(d), is $_____.
   (c) ☐ The issue fee and publication fee, if applicable, has not been received.

3. ☐ Applicant's failure to timely file corrected drawings as required by, and within the three-month period set in, the Notice of Allowability (PTO-37).
   (a) ☐ Proposed corrected drawings were received on _____ (with a Certificate of Mailing or Transmission dated _____), which is after the expiration of the period for reply.
   (b) ☐ No corrected drawings have been received.

4. ☐ The letter of express abandonment which is signed by the attorney or agent of record, the assignee of the entire interest, or all of the applicants.

5. ☐ The letter of express abandonment which is signed by an attorney or agent (acting in a representative capacity under 37 CFR 1.34(a)) upon the filing of a continuing application.

6. ☐ The decision by the Board of Patent Appeals and Interference rendered on _____ and because the period for seeking court review of the decision has expired and there are no allowed claims.

7. ☐ The reason(s) below:

/John W. Miller/
Supervisory Patent Examiner, Art Unit 2623

Petitions to revive under 37 CFR 1.137(a) or (b), or requests to withdraw the holding of abandonment under 37 CFR 1.181, should be promptly filed to minimize any negative effects on patent term.

PTO/SB/61 (08-08)
Approved for use through 09/30/2008. OMB 0651-0031
U.S. Patent and Trademark Office; U.S. DEPARTMENT OF COMMERCE
Under the Paperwork Reduction Act of 1995, no persons are required to respond to a collection of information unless it displays a valid OMB control number.

PETITION FOR REVIVAL OF AN APPLICATION FOR PATENT ABANDONED UNAVOIDABLY UNDER 37 CFR 1.137(a)	Docket Number (Optional)

First Named Inventor: _____ Art Unit: _____

Application Number: _____ Examiner: _____

Filed: _____

Title:

Attention: Office of Petitions
Mail Stop Petition
Commissioner for Patents
P.O. Box 1450
Alexandria, VA 22313-1450

NOTE: If information or assistance is needed in completing this form, please contact Petitions Information at (571) 272-3282.

The above-identified application became abandoned for failure to file a timely and proper reply to a notice or action by the United States Patent and Trademark Office. The date of abandonment is the day after the expiration date of the period set for reply in the Office notice or action plus any extensions of time actually obtained.

APPLICANT HEREBY PETITIONS FOR REVIVAL OF THIS APPLICATION.

NOTE: A grantable petition requires the following items:

(1) Petition fee.
(2) Reply and/or issue fee.
(3) Terminal disclaimer with disclaimer fee – required for all utility and plant applications filed before June 8, 1995, and for all design applications; and
(4) Adequate showing of the cause of unavoidable delay.

1. Petition fee

☐ Small entity – fee $_____ (37 CFR 1.17(l)). Applicant claims small entity status. See 37 CFR 1.27.

☐ Other than small entity – fee $_____ (37 CFR 1.17(l)).

2. Reply and/or fee

A The reply and/or fee to the above-noted Office action in the form of _____ (identify the type of reply):

☐ has been filed previously on _____.

☐ is enclosed herewith.

B The issue fee of $ _____

☐ has been filed previously on _____.

☐ is enclosed herewith.

This collection of information is required by 37 CFR 1.137(a). The information is required to obtain or retain a benefit by the public which is to file (and by the USPTO to process) an application. Confidentiality is governed by 35 U.S.C. 122 and 37 CFR 1.11 and 1.14. This collection is estimated to take 8 hours to complete, including gathering, preparing, and submitting the completed application form to the USPTO. Time will vary depending upon the individual case. Any comments on the amount of time you require to complete this form and/or suggestions for reducing this burden, should be sent to the Chief Information Officer, U.S. Patent and Trademark Office, U.S. Department of Commerce, P.O. Box 1450, Alexandria, VA 22313-1450. DO NOT SEND FEES OR COMPLETED FORMS TO THIS ADDRESS. **SEND TO: Mail Stop Petition, Commissioner for Patents, P.O. Box 1450, Alexandria, VA 22313-1450.**
If you need assistance in completing the form, call 1-800-PTO-9199 and select option 2.

PETITION FOR REVIVAL OF AN APPLICATION FOR PATENT ABANDONED UNAVOIDABLY UNDER 37 CFR 1.137(a)

3. Terminal disclaimer with disclaimer fee

☐ Since this utility/plant application was filed on or after June 8, 1995, no terminal disclaimer is required.

☐ A terminal disclaimer (and disclaimer fee (37 CFR 1.20(d)) of $ _____ for a small entity or $ _____ for other than a small entity) disclaiming the required period of time is enclosed herewith (see PTO/SB/63).

4. An adequate showing of the cause of the delay, and that the entire delay in filing the required reply from the due date for the reply until the filing of a grantable petition under 37 CFR 1.137(a) was unavoidable, is enclosed.

WARNING:

Petitioner/applicant is cautioned to avoid submitting personal information in documents filed in a patent application that may contribute to identity theft. Personal information such as social security numbers, bank account numbers, or credit card numbers (other than a check or credit card authorization form PTO-2038 submitted for payment purposes) is never required by the USPTO to support a petition or an application. If this type of personal information is included in documents submitted to the USPTO, petitioners/applicants should consider redacting such personal information from the documents before submitting them to the USPTO. Petitioner/applicant is advised that the record of a patent application is available to the public after publication of the application (unless a non-publication request in compliance with 37 CFR 1.213(a) is made in the application) or issuance of a patent. Furthermore, the record from an abandoned application may also be available to the public if the application is referenced in a published application or an issued patent (see 37 CFR 1.14). Checks and credit card authorization forms PTO-2038 submitted for payment purposes are not retained in the application file and therefore are not publicly available.

_____ _____
Signature Date

_____ _____
Typed or printed name Registration Number, if applicable

_____ _____
Address Telephone Number

_____
Address

Enclosure ☐ Fee Payment

☐ Reply

☐ Terminal Disclaimer Form

☐ Additional sheets containing statements establishing unavoidable delay

☐ _____

CERTIFICATE OF MAILING OR TRANSMISSION (37 CFR 1.8(a))

I hereby certify that this correspondence is being:

☐ deposited with the United States Postal Service on the date shown below with sufficient postage as first class mail in an envelope addressed to **Mail Stop Petition**, Commissioner for Patents, P.O. Box 1450, Alexandria, VA 22313-1450.

☐ transmitted by facsimile on the date shown below to the United States Patent and Trademark Office at (571) 273-8300.

_____ _____
Date Signature

_____
Typed or printed name of person signing certificate

PTO/SB/61 (08-08)
Approved for use through 09/30/2008. OMB 0651-0031
U.S. Patent and Trademark Office; U.S. DEPARTMENT OF COMMERCE
Under the Paperwork Reduction Act of 1995, no persons are required to respond to a collection of information unless it displays a valid OMB control number.

PETITION FOR REVIVAL OF AN APPLICATION FOR PATENT ABANDONED UNAVOIDABLY UNDER 37 CFR 1.137(a)

NOTE: The following showing of the cause of unavoidable delay must be signed by all applicants or by any other party who is presenting statements concerning the cause of delay.

Signature	Date
Typed or printed name	Registration Number, if applicable

(In the space provided below, please explain in detail the reasons for the delay in filing a proper reply.)

(Please attach additional sheets if additional space is needed.)

Privacy Act Statement

The **Privacy Act of 1974 (P.L. 93-579)** requires that you be given certain information in connection with your submission of the attached form related to a patent application or patent. Accordingly, pursuant to the requirements of the Act, please be advised that: (1) the general authority for the collection of this information is 35 U.S.C. 2(b)(2); (2) furnishing of the information solicited is voluntary; and (3) the principal purpose for which the information is used by the U.S. Patent and Trademark Office is to process and/or examine your submission related to a patent application or patent. If you do not furnish the requested information, the U.S. Patent and Trademark Office may not be able to process and/or examine your submission, which may result in termination of proceedings or abandonment of the application or expiration of the patent.

The information provided by you in this form will be subject to the following routine uses:

1. The information on this form will be treated confidentially to the extent allowed under the Freedom of Information Act (5 U.S.C. 552) and the Privacy Act (5 U.S.C 552a). Records from this system of records may be disclosed to the Department of Justice to determine whether disclosure of these records is required by the Freedom of Information Act.
2. A record from this system of records may be disclosed, as a routine use, in the course of presenting evidence to a court, magistrate, or administrative tribunal, including disclosures to opposing counsel in the course of settlement negotiations.
3. A record in this system of records may be disclosed, as a routine use, to a Member of Congress submitting a request involving an individual, to whom the record pertains, when the individual has requested assistance from the Member with respect to the subject matter of the record.
4. A record in this system of records may be disclosed, as a routine use, to a contractor of the Agency having need for the information in order to perform a contract. Recipients of information shall be required to comply with the requirements of the Privacy Act of 1974, as amended, pursuant to 5 U.S.C. 552a(m).
5. A record related to an International Application filed under the Patent Cooperation Treaty in this system of records may be disclosed, as a routine use, to the International Bureau of the World Intellectual Property Organization, pursuant to the Patent Cooperation Treaty.
6. A record in this system of records may be disclosed, as a routine use, to another federal agency for purposes of National Security review (35 U.S.C. 181) and for review pursuant to the Atomic Energy Act (42 U.S.C. 218(c)).
7. A record from this system of records may be disclosed, as a routine use, to the Administrator, General Services, or his/her designee, during an inspection of records conducted by GSA as part of that agency's responsibility to recommend improvements in records management practices and programs, under authority of 44 U.S.C. 2904 and 2906. Such disclosure shall be made in accordance with the GSA regulations governing inspection of records for this purpose, and any other relevant (*i.e.*, GSA or Commerce) directive. Such disclosure shall not be used to make determinations about individuals.
8. A record from this system of records may be disclosed, as a routine use, to the public after either publication of the application pursuant to 35 U.S.C. 122(b) or issuance of a patent pursuant to 35 U.S.C. 151. Further, a record may be disclosed, subject to the limitations of 37 CFR 1.14, as a routine use, to the public if the record was filed in an application which became abandoned or in which the proceedings were terminated and which application is referenced by either a published application, an application open to public inspection or an issued patent.
9. A record from this system of records may be disclosed, as a routine use, to a Federal, State, or local law enforcement agency, if the USPTO becomes aware of a violation or potential violation of law or regulation.

PTO/SB/64 (08-08)
Approved for use through 09/30/2008. OMB 0651-0031
U.S. Patent and Trademark Office; U.S. DEPARTMENT OF COMMERCE
Under the Paperwork Reduction Act of 1995, no persons are required to respond to a collection of information unless it displays a valid OMB control number.

PETITION FOR REVIVAL OF AN APPLICATION FOR PATENT ABANDONED UNINTENTIONALLY UNDER 37 CFR 1.137(b)	Docket Number (Optional)

First named inventor:

Application No.: Art Unit:

Filed: Examiner:

Title:

Attention: Office of Petitions
Mail Stop Petition
Commissioner for Patents
P.O. Box 1450
Alexandria, VA 22313-1450
FAX (571) 273-8300

NOTE: If information or assistance is needed in completing this form, please contact Petitions Information at (571) 272-3282.

The above-identified application became abandoned for failure to file a timely and proper reply to a notice or action by the United States Patent and Trademark Office. The date of abandonment is the day after the expiration date of the period set for reply in the office notice or action plus an extensions of time actually obtained.

APPLICANT HEREBY PETITIONS FOR REVIVAL OF THIS APPLICATION

NOTE: A grantable petition requires the following items:
(1) Petition fee;
(2) Reply and/or issue fee;
(3) Terminal disclaimer with disclaimer fee - required for all utility and plant applications filed before June 8, 1995; and for all design applications; and
(4) Statement that the entire delay was unintentional.

1.Petition fee

☐ Small entity-fee $ _____ (37 CFR 1.17(m)). Applicant claims small entity status. See 37 CFR 1.27.

☐ Other than small entity – fee $ _____ (37 CFR 1.17(m))

2. Reply and/or fee

A. The reply and/or fee to the above-noted Office action in the form of _____(identify type of reply):

☐ has been filed previously on _____.
☐ is enclosed herewith.

B. The issue fee and publication fee (if applicable) of $ _____.

☐ has been paid previously on _____.
☐ is enclosed herewith.

This collection of information is required by 37 CFR 1.137(b). The information is required to obtain or retain a benefit by the public which is to file (and by the USPTO to process) an application. Confidentiality is governed by 35 U.S.C. 122 and 37 CFR 1.11 and 1.14. This collection is estimated to take 1.0 hour to complete, including gathering, preparing, and submitting the completed application form to the USPTO. Time will vary depending upon the individual case. Any comments on the amount of time you require to complete this form and/or suggestions for reducing this burden, should be sent to the Chief Information Officer, U.S. Patent and Trademark Office, U.S. Department of Commerce, P.O. Box 1450, Alexandria, VA 22313-1450. DO NOT SEND FEES OR COMPLETED FORMS TO THIS ADDRESS. **SEND TO: Mail Stop Petition, Commissioner for Patents, P.O. Box 1450, Alexandria, VA 22313-1450.**

If you need assistance in completing the form, call 1-800-PTO-9199 and select option 2.

3. Terminal disclaimer with disclaimer fee

☐ Since this utility/plant application was filed on or after June 8, 1995, no terminal disclaimer is required.

☐ A terminal disclaimer (and disclaimer fee (37 CFR 1.20(d)) of $ _____ for a small entity or $ _____ for other than a small entity) disclaiming the required period of time is enclosed herewith (see PTO/SB/63).

4. STATEMENT: The entire delay in filing the required reply from the due date for the required reply until the filing of a grantable petition under 37 CFR 1.137(b) was unintentional. [NOTE: The United States Patent and Trademark Office may require additional information if there is a question as to whether either the abandonment or the delay in filing a petition under 37 CFR 1.137(b) was unintentional (MPEP 711.03(c), subsections (III)(C) and (D)).]

WARNING:

Petitioner/applicant is cautioned to avoid submitting personal information in documents filed in a patent application that may contribute to identity theft. Personal information such as social security numbers, bank account numbers, or credit card numbers (other than a check or credit card authorization form PTO-2038 submitted for payment purposes) is never required by the USPTO to support a petition or an application. If this type of personal information is included in documents submitted to the USPTO, petitioners/applicants should consider redacting such personal information from the documents before submitting them to the USPTO. Petitioner/applicant is advised that the record of a patent application is available to the public after publication of the application (unless a non-publication request in compliance with 37 CFR 1.213(a) is made in the application) or issuance of a patent. Furthermore, the record from an abandoned application may also be available to the public if the application is referenced in a published application or an issued patent (see 37 CFR 1.14). Checks and credit card authorization forms PTO-2038 submitted for payment purposes are not retained in the application file and therefore are not publicly available.

_____ _____
Signature Date

_____ _____
Typed or printed name Registration Number, if applicable

_____ _____
Address Telephone Number

_____
Address

Enclosures: ☐ Fee Payment
☐ Reply
☐ Terminal Disclaimer Form
☐ Additional sheets containing statements establishing unintentional delay
☐ Other: _____

CERTIFICATE OF MAILING OR TRANSMISSION [37 CFR 1.8(a)]

I hereby certify that this correspondence is being:

☐ Deposited with the United States Postal Service on the date shown below with sufficient postage as first class mail in an envelope addressed to: Mail Stop Petition, Commissioner for Patents, P. O. Box 1450, Alexandria, VA 22313-1450.

☐ Transmitted by facsimile on the date shown below to the United States Patent and Trademark Office at (571) 273-8300.

_____ _____
Date Signature

_____
Typed or printed name of person signing certificate

Privacy Act Statement

The **Privacy Act of 1974 (P.L. 93-579)** requires that you be given certain information in connection with your submission of the attached form related to a patent application or patent. Accordingly, pursuant to the requirements of the Act, please be advised that: (1) the general authority for the collection of this information is 35 U.S.C. 2(b)(2); (2) furnishing of the information solicited is voluntary; and (3) the principal purpose for which the information is used by the U.S. Patent and Trademark Office is to process and/or examine your submission related to a patent application or patent. If you do not furnish the requested information, the U.S. Patent and Trademark Office may not be able to process and/or examine your submission, which may result in termination of proceedings or abandonment of the application or expiration of the patent.

The information provided by you in this form will be subject to the following routine uses:

1. The information on this form will be treated confidentially to the extent allowed under the Freedom of Information Act (5 U.S.C. 552) and the Privacy Act (5 U.S.C 552a). Records from this system of records may be disclosed to the Department of Justice to determine whether disclosure of these records is required by the Freedom of Information Act.
2. A record from this system of records may be disclosed, as a routine use, in the course of presenting evidence to a court, magistrate, or administrative tribunal, including disclosures to opposing counsel in the course of settlement negotiations.
3. A record in this system of records may be disclosed, as a routine use, to a Member of Congress submitting a request involving an individual, to whom the record pertains, when the individual has requested assistance from the Member with respect to the subject matter of the record.
4. A record in this system of records may be disclosed, as a routine use, to a contractor of the Agency having need for the information in order to perform a contract. Recipients of information shall be required to comply with the requirements of the Privacy Act of 1974, as amended, pursuant to 5 U.S.C. 552a(m).
5. A record related to an International Application filed under the Patent Cooperation Treaty in this system of records may be disclosed, as a routine use, to the International Bureau of the World Intellectual Property Organization, pursuant to the Patent Cooperation Treaty.
6. A record in this system of records may be disclosed, as a routine use, to another federal agency for purposes of National Security review (35 U.S.C. 181) and for review pursuant to the Atomic Energy Act (42 U.S.C. 218(c)).
7. A record from this system of records may be disclosed, as a routine use, to the Administrator, General Services, or his/her designee, during an inspection of records conducted by GSA as part of that agency's responsibility to recommend improvements in records management practices and programs, under authority of 44 U.S.C. 2904 and 2906. Such disclosure shall be made in accordance with the GSA regulations governing inspection of records for this purpose, and any other relevant (*i.e.*, GSA or Commerce) directive. Such disclosure shall not be used to make determinations about individuals.
8. A record from this system of records may be disclosed, as a routine use, to the public after either publication of the application pursuant to 35 U.S.C. 122(b) or issuance of a patent pursuant to 35 U.S.C. 151. Further, a record may be disclosed, subject to the limitations of 37 CFR 1.14, as a routine use, to the public if the record was filed in an application which became abandoned or in which the proceedings were terminated and which application is referenced by either a published application, an application open to public inspection or an issued patent.
9. A record from this system of records may be disclosed, as a routine use, to a Federal, State, or local law enforcement agency, if the USPTO becomes aware of a violation or potential violation of law or regulation.

UNITED STATES PATENT AND TRADEMARK OFFICE

Commissioner for Patents
United States Patent and Trademark Office
P.O. Box 1450
Alexandria, VA 22313-1450
www.uspto.gov

MICHAEL G. GILMAN, P.C.
424 LANTANA PARK
LEXINGTON KY 40515

COPY MAILED

SEP 29 2008

OFFICE OF PETITIONS

In re Application of :
Tsukidate :
Application No. 10/684,643 : DECISION
Filed 15 October, 2003 :
Attorney Docket No. 041-2057C :

This is a decision on the petition filed on 18 September, 2008, considered as a petition under 37 C.F.R. §1.181 (no fee) requesting withdrawal of the holding of abandonment in the above-identified application.

> **NOTE: With the papers filed on 18 September, 2008—to with: Request to Withdraw the Holding of Abandonment, and Amendment—Petitioner submitted copies of two (2) one- (1-) page documents that appear and are understood to be copies of previously filed Notices of Change of Address. The Office is not at this writing considering either of those papers as contemporary filings, and so has not acted to change Petitioner's address from that set forth above. If the Office is in error in this understanding, Petitioner must Notice the Office immediately.**

The petition as considered under 37 C.F.R. §1.181 is **GRANTED**.

As to the Request to Withdraw
the Holding of Abandonment

A proper showing (for relief under 37 C.F.R. §1.181):

- (as to non-receipt) requires at the very minimum: a statement from practitioner stating that the Office action was not received by the practitioner; a statement from the practitioner attesting to the fact that a search of the file jacket and docket records for the application indicates that the Office action was not received with a copy of those docket records; and a brief statement of the calendaring process and a copy of the due-date (calendar) docket record(s) where the nonreceived Office action would have been scheduled for reply had it been received must be attached to and referenced in the practitioner's statement; alternatively,

- (for a showing of timely and proper reply) requires a statement from practitioner stating that the reply was timely submitted by the practitioner; and copies of all papers submitted as and/or in support of that reply, with/and a copy of the date-stamped receipt card, Office FAX receipt acknowledgement (not simply Petitioner's FAX transmittal), or EFS receipt acknowledgment from the Office, along with practitioner's attestation as to the correctness/completeness of his/her records.

The showing(s) must include that of the person(s) with first-hand knowledge and an acknowledgment by the Petitioner that he/she has reviewed that information in compliance with his/her duty of candor to the Office.

Petitioners' attentions always are drawn to the Commentary at MPEP §711.03(c).[1]

---

[1] The Commentary at MPEP §711.03(c) provides in pertinent part:

*****

I. PETITION TO WITHDRAW HOLDING OF ABANDONMENT

A petition to revive an abandoned application (discussed below) should not be confused with a petition from an examiner's holding of abandonment. Where an applicant contends that the application is not in fact abandoned (e.g., there is disagreement as to the sufficiency of the reply, or as to controlling dates), a petition under 37 C.F.R. 1.181(a) requesting withdrawal of the holding of abandonment is the appropriate course of action, and such petition does not require a fee. Where there is no dispute as to whether an application is abandoned (e.g., the applicant's contentions merely involve the cause of abandonment), a petition under 37 C.F.R. 1.137 (accompanied by the appropriate petition fee) is necessary to revive the abandoned application.

Two additional procedures are available for reviving an application that has become abandoned due to a failure to reply to an Office Action: (1) a petition under 37 C.F.R. 1.137(a) based on unavoidable delay; and (2) a petition under 37 C.F.R. 1.137(b) based on unintentional delay.

A. Petition To Withdraw Holding of Abandonment Based on Failure To Receive Office Action

In *Delgar v. Schulyer*, 172 USPQ 513 (D.D.C. 1971), the court decided that the Office should mail a new Notice of Allowance in view of the evidence presented in support of the contention that the applicant's representative did not receive the original Notice of Allowance. Under the reasoning of *Delgar*, an allegation that an Office action was never received may be considered in a petition to withdraw the holding of abandonment. If adequately supported, the Office may grant the petition to withdraw the holding of abandonment and remail the Office action. That is, the reasoning of *Delgar* is applicable regardless of whether an application is held abandoned for failure to timely pay the issue fee (35 U.S.C. 151) or for failure to prosecute (35 U.S.C. 133).

To minimize costs and burdens to practitioners and the Office, the Office has modified the showing required to establish nonreceipt of an Office action. The showing required to establish nonreceipt of an Office communication must include a statement from the practitioner **>describing the system used for recording an Office action received at the correspondence address of record with the USPTO. The statement should establish that the docketing system is sufficiently reliable. It is expected that the record would include, but not be limited to, the application number, attorney docket number, the mail date of the Office action and the due date for the response.

Practitioner must state that the Office action was not received at the correspondence address of record, and that a search of the practitioner's record(s), including any file jacket or the equivalent, and the application contents, indicates that the Office action was not received. A copy of the record(s) used by the practitioner where the non-received Office action would have been entered had it been received is required.

A copy of the practitioner's record(s) required to show non-receipt of the Office action should include the master docket for the firm. That is, if a three month period for reply was set in the nonreceived Office action, a copy of the master docket report showing all replies docketed for a date three months from the mail date of the nonreceived Office action must be submitted as documentary proof of nonreceipt of the Office action. If no such master docket exists, the practitioner should so state and provide other evidence such as, but not limited to, the following: the application file jacket; incoming mail log; calendar; reminder system; or the individual docket record for the application in question.<

The showing outlined above may not be sufficient if there are circumstances that point to a conclusion that the Office action may have been lost after receipt rather than a conclusion that the Office action was lost in the mail (e.g., if the practitioner has a history of not receiving Office actions).

Petitioner seeks to provide the documentation in compliance with the Commentary at MPEP §711.03(c)(A) and/or (B) as it is set forth on the website (and included for reference herein).

BACKGROUND

The record reflects as follows:

Petitioner failed to reply timely and properly to the non-final Office action mailed on 1 November, 2007, with reply due absent extension of time on or before 1 February, 2008.

The instant application went abandoned by operation of law after midnight 1 February, 2008.

Evidence of nonreceipt of an Office communication or action (e.g., Notice of Abandonment or an advisory action) other than that action to which reply was required to avoid abandonment would not warrant withdrawal of the holding of abandonment. Abandonment takes place by operation of law for failure to reply to an Office action or timely pay the issue fee, not by operation of the mailing of a Notice of Abandonment. See *Lorenz v. Finkl*, 333 F.2d 885, 889-90, 142 USPQ 26, 29-30 (CCPA 1964); *Krahn v. Commissioner*, 15 USPQ2d 1823, 1824 (E.D. Va 1990); *In re Application of Fischer*, 6 USPQ2d 1573, 1574 (Comm'r Pat. 1988).

B. Petition To Withdraw Holding of Abandonment Based on Evidence That a Reply Was Timely Mailed or Filed

37 C.F.R. 1.10(c) through 1.10(e) and 1.10(g) set forth procedures for petitioning the Director of the USPTO to accord a filing date to correspondence as of the date of deposit of the correspondence as "Express Mail." A petition to withdraw the holding of abandonment relying upon a timely reply placed in "Express Mail" must include an appropriate petition under 37 C.F.R. 1.10(c), (d), (e), or (g) (see MPEP § 513). When a paper is shown to have been mailed to the Office using the "Express Mail" procedures, the paper must be entered in PALM with the "Express Mail" date.

Similarly, applicants may establish that a reply was filed with a postcard receipt that properly identifies the reply and provides *prima facie* evidence that the reply was timely filed. See MPEP § 503. For example, if the application has been held abandoned for failure to file a reply to a first Office action, and applicant has a postcard receipt showing that an amendment was timely filed in response to the Office action, then the holding of abandonment should be withdrawn upon the filing of a petition to withdraw the holding of abandonment. When the reply is shown to have been timely filed based on a postcard receipt, the reply must be entered into PALM using the date of receipt of the reply as shown on the post card receipt.

Where a certificate of mailing under 37 C.F.R. 1.8, but not a postcard receipt, is relied upon in a petition to withdraw the holding of abandonment, see 37 C.F.R. 1.8(b) and MPEP § 512. As stated in 37 C.F.R. 1.8(b)(3) the statement that attests to the previous timely mailing or transmission of the correspondence must be on a personal knowledge basis, or to the satisfaction of the Director of the USPTO. If the statement attesting to the previous timely mailing is not made by the person who signed the Certificate of Mailing (i.e., there is no personal knowledge basis), then the statement attesting to the previous timely mailing should include evidence that supports the conclusion that the correspondence was actually mailed (e.g., copies of a mailing log establishing that correspondence was mailed for that application). When the correspondence is shown to have been timely filed based on a certificate of mailing, the correspondence is entered into PALM with the actual date of receipt (i.e., the date that the duplicate copy of the papers was filed with the statement under 37 C.F.R. 1.8).

37 C.F.R. 1.8(b) also permits applicant to notify the Office of a previous mailing or transmission of correspondence and submit a statement under 37 C.F.R. 1.8(b)(3) accompanied by a duplicate copy of the correspondence when a reasonable amount of time (e.g., more than one month) has elapsed from the time of mailing or transmitting of the correspondence. Applicant does not have to wait until the application becomes abandoned before notifying the Office of the previous mailing or transmission of the correspondence. Applicant should check the private Patent Application Information Retrieval (PAIR) system for the status of the correspondence before notifying the Office. See MPEP §512.

C. Treatment of Untimely Petition To Withdraw Holding of Abandonment

37 C.F.R. 1.181(f) provides that, *inter alia*, except as otherwise provided, any petition not filed within 2 months from the action complained of may be dismissed as untimely. Therefore, any petition (under 37 C.F.R. 1.181) to withdraw the holding of abandonment not filed within 2 months of the mail date of a notice of abandonment (the action complained of) may be dismissed as untimely. 37 C.F.R. 1.181(f). Rather than dismiss an untimely petition to withdraw the holding of abandonment under 37 C.F.R. 1.181(f), the Office may require a terminal disclaimer as a condition of granting an untimely petition to withdraw the holding of abandonment.

*****

The Office mailed the Notice of Abandonment on 3 July, 2008.

Petitioner filed a petition under the provisions of 37 C.F.R. §1.137(a) on 25 July, 2008, averred, *inter alia*, nonreceipt, but failed to provide documentary support as discussed at MPEP §711.03(c)). Petitioner argued that the Office failed to enter timely and properly his Notice of Change of Address. The requirements for a petition under the provisions of 37 C.F.R. §1.137(a) include not only the petition, fee and showing of unavoidable delay, but also the required reply to the Office action (*see*: MPEP §711.03(c)) to which Petitioner failed to reply, and so the petition was dismissed on 8 September, 2008.

Petitioner submitted the instant petition on 18 September, 2008, with, *inter alia*, a reply to the Office action in the form of an amendment, made the showing that the Office failed to enter timely the Notice of Change of Address timely submitted by Petitioner, and thus mailed the Office action in question to the wrong correspondence address. (Petitioner submitted *via* FAX on or about 29 September, 2008, a copy of his due-date calendar for the relevant date herein. However, the clear record of Petitioner timely notifying the Office of a Change of Address—date stamped ("NOV 13 2005") as received by the Office Central Fax Center—and the failure of the Office to properly and timely enter that change is the central and controlling showing in that regard.)

Petitioner appears to comply with the guidance in the Commentary at MPEP §711.03(c), which sets forth the showing requirements herein.

Out of an abundance of caution, Petitioners always are reminded that the filing of a petition under 37 C.F.R. §1.181 does not toll any periods that may be running any action by the Office and a petition seeking relief under the regulation must be filed within two (2) months of the act complained of (see: 37 C.F.R. §1.181(f)), and that those registered to practice and all others who make representations before the Office are reminded to inquire into the underlying facts of representations made to the Office and support averments with the appropriate documentation–since all owe to the Office the continuing duty to disclose.[2]

The availability of applications and application papers online to applicants/practitioners who diligently associate their Customer Number with the respective application(s) now provides an applicant/practitioner on-demand information as to events/transactions in an application.

---

[2] See supplement of 17 June, 1999. The Patent and Trademark Office is relying on Petitioner's duty of candor and good faith and accepting a statement made by Petitioner. See Changes to Patent Practice and Procedure, 62 Fed. Reg. at 53160 and 53178, 1203 Off. Gaz. Pat. Office at 88 and 103 (responses to comments 64 and 109)(applicant obligated under 37 C.F.R. §10.18 to inquire into the underlying facts and circumstances when providing statements to the Patent and Trademark Office).

Allegations as to the Request to
Withdraw the Holding of Abandonment

The courts have determined the construct for properly supporting a petition seeking withdrawal of a holding of abandonment.[3] (See, also, the commentary at MPEP §711.03(c)(I)(A) and (B).)

And the regulation requires that relief be sought within two (2) months of the act complained of.

Petitioner appears to have satisfied the showing requirements as discussed hereinabove.

CONCLUSION

The petition under 37 C.F.R. §1.181 is **granted**, and the 3 July, 2008, Notice of Abandonment is **vacated**.

The instant application is released to Technology Center/AU 2621 for further processing in due course.

Petitioner may find it beneficial to view Private PAIR within a fortnight of the instant decision to ensure that the revival has been acknowledged by the Technology Center/AU in response to this decision—and it is noted that all inquiries with regard to that change in status should be directed to the Technology Center/AU where that change of status must be effected.

While telephone inquiries regarding this decision may be directed to the undersigned at (571) 272-3214, it is noted that all practice before the Office is in writing (see: 37 C.F.R. §1.2[4]) and the proper authority for action on any matter in this regard are the statutes (35 U.S.C.), regulations (37 C.F.R.) and the commentary on policy (MPEP). Therefore, no telephone discussion may be controlling or considered authority for Petitioner's action(s).

/ John J. Gillon, Jr./
John J. Gillon, Jr.
Senior Attorney
Office of Petitions

---

[3] See: Delgar v. Schulyer, 172 USPQ 513 (D.D.C. 1971).

[4] The regulations at 37 C.F.R. §1.2 provide:

§1.2 Business to be transacted in writing.

All business with the Patent and Trademark Office should be transacted in writing. The personal attendance of applicants or their attorneys or agents at the Patent and Trademark Office is unnecessary. The action of the Patent and Trademark Office will be based exclusively on the written record in the Office. No attention will be paid to any alleged oral promise, stipulation, or understanding in relation to which there is disagreement or doubt.

UNITED STATES PATENT AND TRADEMARK OFFICE

Commissioner for Patents
United States Patent and Trademark Office
P.O. Box 1450
Alexandria, VA 22313-1450
www.uspto.gov

MICHAEL G. GILMAN, P.C.
424 LANTANA PARK
LEXINGTON KY 40515

COPY MAILED

NOV 2 4 2008

OFFICE OF PETITIONS

In re Application of :
Tsukidate :
Application No. 10/684,643 : SUPPLEMENTAL DECISION
Filed 15 October, 2003 :
Attorney Docket No. 041-2057C :

This is a supplement to the decision mailed on 29 September, 2008, on the petitions filed on 25 July, 2008, under 37 C.F.R. §1.137(a), and a subsequent 29 September, 2008, petition considered as a petition under 37 C.F.R. §1.181 (no fee) requesting withdrawal of the holding of abandonment in the above-identified application.

This supplement in no way alters the substantive result of that 29 September, 2008, decision, but rather resolves a fee matter not previously addressed

The request to refund the petition fee previously submitted is **GRANTED**.

As to the Request to Withdraw
the Holding of Abandonment

With regard to proper showing (for relief under 37 C.F.R. §1.181), Petitioner's attentions always are drawn to the Commentary at MPEP §711.03(c).

BACKGROUND

Petitioner supplemented his 25 July, 2008, petition under 37 C.F.R. §1.137(a) on 8 September, 2008, with a 29 September, 2008, petition and supporting showing considered as a petition under 37 C.F.R. §1.181 (no fee) requesting withdrawal of the holding of abandonment. The request to withdraw the holding of abandonment was granted on 29 September, 2008.

Because of the result therein, the fee previously submitted now is refunded *via* Petitioner's deposit account.

Should Petitioner later find that the refund has not been made, Petitioner should submit a refund request to the Office of Finance with a copy of this decision.

CONCLUSION

The request for refund is **granted**.

The instant application is released to Technology Center/AU 2621 for further processing in due course.

While telephone inquiries regarding this decision may be directed to the undersigned at (571) 272-3214, it is noted that all practice before the Office is in writing (see: 37 C.F.R. §1.2[1]) and the proper authority for action on any matter in this regard are the statutes (35 U.S.C.), regulations (37 C.F.R.) and the commentary on policy (MPEP). Therefore, no telephone discussion may be controlling or considered authority for Petitioner's action(s).

/ John J. Gillon, Jr./
John J. Gillon, Jr.
Senior Attorney
Office of Petitions

[1] The regulations at 37 C.F.R. §1.2 provide:

§1.2 Business to be transacted in writing.

All business with the Patent and Trademark Office should be transacted in writing. The personal attendance of applicants or their attorneys or agents at the Patent and Trademark Office is unnecessary. The action of the Patent and Trademark Office will be based exclusively on the written record in the Office. No attention will be paid to any alleged oral promise, stipulation, or understanding in relation to which there is disagreement or doubt.

UNITED STATES PATENT AND TRADEMARK OFFICE

Commissioner for Patents
United States Patent and Trademark Office
P.O. Box 1450
Alexandria, VA 22313-1450
www.uspto.gov

COPY MAILED

AUG 1 3 2004

OFFICE OF PETITIONS

PILLSBURY WINTHROP, LLP
P.O. BOX 10500
MCLEAN, VA 22102

In re Application of :
Frampton Erroll Ellis :
Application No.: 10/684,657 : ON PETITION
Filed: NO FILING DATE ACCORDED :
Attorney Docket No.: GNC26US :

This a decision on the "Petition for Filing Date" filed June 1, 2004. The petition will be treated under 37 CFR 1.182 in accordance with 37 CFR 1.53(e)(2).

The petition is **granted.** The application has been accorded a filing date of October 15, 2003, and will be processed as an application filed under 37 CCR 1.53(b).

The subject non-provisional application was filed on October 15, 2003. On March 29, 2004, the Initial Patent Examination Division mailed a Notice of Incomplete Nonprovisional Application indicating that the application had not been accorded a filing date because the specification was missing. The notice allowed a two-month period for reply. The instant petition was filed on June 1, 2004 and was accompanied by a complete copy of provisional application 60/418, 177.

Petitioner argues that the subject application was complete on October 15, 2003, because the applicant filed several documents that either incorporated by reference the provisional application 60/418,177 or made reference to the provisional application. Petitioner also maintains that the Patent and Trademark Office (Office) acknowledged receipt of the subject non-provisional application by a postcard date-stamped by the Office on October 15, 2003.

In view of the incorporation by reference contained in the paper filed October 15, 2003, titled "Note", the USPTO may, on petition, accept a copy of the prior application at a later date and accord this application an October 15, 2003, filing date. The "Note" will be construed as amendment requesting the acceptance of the omitted application papers based on the incorporation by reference statement. Accordingly, the petition to accept the later filed specification and drawings and accord this application a filing date of October 15, 2003, is granted.

The petition fee of $130.00 will not be refunded as the petition was required in order to obtain the filing date requested. Section 201.06(c)(A)[1] of the Manual of Patent Examining Procedure provides that:

> [m]aterial needed to accord an application a filing date may not be incorporated by reference. Therefore, if a continuation or divisional application as originally filed incorporates by reference material omitted from the application papers, which is needed to accord the application a filing date, the application will not be entitled to a filing date. a petition under 37 CFR 1.182, and the required petition fee, including an amendment submitting the necessary omitted material, requesting that the necessary omitted materials contained in the prior application and submitted in the amendment, be included in the continuation or divisional application based upon the incorporation by reference statement, is required in order to accord the application a filing date as of the date of deposit of the continuation or divisional application.

Given the aforementioned, the instant petition and fee were required in order to accord the application a filing date of October 15, 2003.

The application will be forwarded to the Office of Initial Patent Examination for further processing with a filing date of October 15, 2003, using the application papers filed on October 15, 2003, and those filed on June 1, 2004.

Telephone inquiries concerning this matter may be directed to the undersigned at (703) 305-0010.

Kenya A. McLaughlin
Petition Attorney
Office of Petitions

[1] The use of "continuation or divisional application" in this section is interpreted to include non-provisional application's of a provisional application.

SPE RESPONSE FOR CERTIFICATE OF CORRECTION

Paper No.: _____

DATE : 5-30-08

TO SPE OF : ART UNIT 2827

SUBJECT : Request for Certificate of Correction on Patent No.: 7233517 (10/684661

A response is requested with respect to the accompanying request for a certificate of correction.

~~Please complete this form and~~ return with file, within **7** days to:
Palm location **7580, Certificates of Correction Branch – South Tower – 9A22**
~~If response is for an IFW,~~ **return to employee (named below) via PUBSCofC Team in MADRAS.**
With respect to the change(s) requested, correcting Office and/or Applicant's errors, should the patent read as shown in the certificate of correction (COCIN)? No new matter should be introduced, nor should the scope or meaning of the claims be changed.

Should drawings be entered?

Eva James

Thank You For Your Assistance

Certificates of Correction Branch
Tel. No. 703-305-8309

The request for issuing the above-identified correction(s) is hereby:
Note your decision on the appropriate box.

☒ **Approved**	**All** changes apply.
☐ **Approved in Part**	Specify below which changes **do not** apply.
☐ **Denied**	State the reasons for denial below.

Comments:

_____

_____

_____

_____

_____

_____ 2827

SPE **Art Unit**

UNITED STATES PATENT AND TRADEMARK OFFICE

COMMISSIONER FOR PATENTS
UNITED STATES PATENT AND TRADEMARK OFFICE
P.O. BOX 1450
ALEXANDRIA, VA 22313-1450
www.uspto.gov

OWENS-ILLINOIS, INC.
ONE SEAGATE, 25-LDP
TOLEDO, OH 43666

COPY MAILED

AUG 2 9 2005

OFFICE OF PETITIONS

In re Application of :
Robert S. Konefal, et al. :
Application No. 10/684,724 : DECISION GRANTING PETITION
Filed: October 13, 2003 : UNDER 37 CFR 1.137(b)
Attorney Docket No. 17953 USA :

This is a decision on the petition, filed July 25, 2005, which is being treated as a petition under 37 CFR 1.137(b) to revive the instant nonprovisional application for failure to timely notify the U.S. Patent and Trademark (USPTO) of the filing of an application in a foreign country, or under a multinational treaty that requires publication of applications eighteen months after filing. *See* 37 CFR 1.137(f).

The petition is **GRANTED**.

Petitioner states that the instant nonprovisional application is the subject of an application filed in an eighteen month publication country on October 24, 2004. However, the USPTO was unintentionally not notified of this filing within 45 days subsequent to the filing of the subject application in an eighteen month publication country.

In view of the above, this application became abandoned pursuant to 35 U.S.C. §122(b)(2)(B)(iii) and 37 CFR 1.213(c) for failure to timely notify the Office of the filing of an application in a foreign country or under a multilateral international agreement that requires publication of applications 18 months after filing.

A petition to revive an application abandoned pursuant to 35 U.S.C. § 122(b)(2)(B)(iii) for failure to notify the USPTO of a foreign filing must be accompanied by:

(1) the required reply which is met by the notification of such filing in a foreign country or under a multinational treaty;
(2) the petition fee as set forth in 37 CFR 1.17(m); and
(3) a statement that the entire delay in filing the required reply from the due date of the reply until the filing of a grantable petition was unintentional.

The petition has been found to be in compliance with 37 CFR 1.137(b). Accordingly, the failure to timely notify the USPTO of a foreign or international filing within 45 days after the date of filing of such foreign or international application as provided by 35 U.S.C. § 122(b)(2)(B)(iii) and 37 CFR 1.213(c) is accepted as having been unintentionally delayed.

The previous Request and Certification under 35 U.S.C. § 122(b)(2)(B)(i) has been rescinded. A Notice Regarding Rescission of Nonpublication Request which sets forth the projected publication date of December 1, 2005 accompanies this decision on petition.

Any inquiries concerning this decision may be directed to the undersigned at (571) 272-3204.

This application is being referred to Technology Center Art Unit 3727 for further prosecution.

Sherry D. Brinkley
Petitions Examiner
Office of Petitions
Office of the Deputy Commissioner
for Patent Examination Policy

ATTACHMENT: Notice Regarding Rescission of Nonpublication Request

UNITED STATES PATENT AND TRADEMARK OFFICE

Commissioner for Patents
United States Patent and Trademark Office
P.O. Box 1450
Alexandria, VA 22313-1450
www.uspto.gov

COPY MAILED
Nov. 28. 2008
OFFICE OF PETITIONS

VAUGHAN WILLIAM WITTORFF
COMPLEX SYSTEMS RESEARCH LIMITED
5 REGENCY SQUARE
CAMBRIDGE ENG CB1 3WL GB
UNITED KINGDOM

In re Application of	:	
Wittorff	:	
Application No. 10/684,745	:	DECISION
Filed: 14 October, 2003	:	
Attorney Docket No. 03-640	:	

This is a decision on the petition, filed on 1 October, 2008, and supplemented on 3 October, 2008, for revival of an application abandoned due to unavoidable delay under 37 C.F.R. §1.137(a).

The petition under 37 C.F.R. §1.137(a) is **DISMISSED**.

Any further petition to revive must be submitted within TWO (2) MONTHS from the mail date of this decision. Extensions of time under 37 C.F.R. §1.136(a) are permitted. The reconsideration request should include a cover letter entitled "Renewed Petition under 37 C.F.R. §1.137(a)."

Petitioner's alternative is to file a complete and fully executed petition (with properly executed supporting statements) under 37 C.F.R. §1.181 or 37 C.F.R. §1.137(b), discussed below.

This is **not** a final agency action within the meaning of 5 U.S.C.§704.

As to Allegation of
Unavoidable Delay

The requirements of a grantable petition pursuant to 37 C.F.R. §1.137(a) are the petition and fee therefor, a reply, a proper showing of unavoidable delay under the regulation, and, where applicable, a terminal disclaimer and fee. (However, it does not appear that a terminal disclaimer and fee are due here.)

Petitioner does not appear to have satisfied the showing requirement as to unavoidable delay.

BACKGROUND

The record reflects as follows:

Petitioner failed to reply timely and properly to the Notice of Allowance/Allowability and Fees Due mailed on 4 June, 2008, with reply due under a non-extendable deadline on or before 4 September, 2008.

The application went abandoned after midnight 4 September, 2008

The Office mailed a Notice of Abandonment on 29 September, 2008.

On 1 October, 2008, Petitioner (*pro se*) filed the instant petition (supplemented on 3 October, 2008, with a letter detailing what appear to be counseling appointment dates), with fee, the reply in the form of the fees due, and made a statement of unavoidable delay, which Petitioner avers is due: (a) in part because his acquaintance who is an attorney in England was prohibited by a non-compete agreement from reminding Petitioner of the due date of the reply, and (b) in part because Petitioner experienced what he describes only as "a person (family) crisis"—a statement he supports only with a letter reporting counseling support on "13th August, 3rd September, 10th September, 17th September and 24th September" followed (the letter indicates) by an appointment scheduled for 2nd October—the day after the petition was filed and the day before the supplement (letter) was filed. Notably:

- there is no indication that Petitioner had a time/event conflict on the due date of the reply; and
- Petitioner was able to file the petition and the supplement in a period when he was seeking professional assistance at a greater rate than at the due date of the reply.

The showing of record is that the delay in taking action in the above-identified application was the result of petitioner's preoccupation with other matters. Petitioner's preoccupation with other matters which took precedence over the above-identified application does not constitute unavoidable delay.[1]

[1] *See* Smith v. Mossinghoff, 671 F.2d 533, 538, 213 USPQ 977, 982 (D.C. Cir. 1982).

Decisions on reviving abandoned applications on the basis of "unavoidable" delay have adopted the reasonably prudent person standard in determining if the delay was unavoidable:

> The word 'unavoidable' . . . is applicable to ordinary human affairs, and requires no more or greater care or diligence than is generally used and observed by prudent and careful men in relation to their most important business. It permits them in the exercise of this care to rely upon the ordinary and trustworthy agencies of mail and telegraph, worthy and reliable employees, and such other means and instrumentalities as are usually employed in such important business. If unexpectedly, or through the unforeseen fault or imperfection of these agencies and instrumentalities, there occurs a failure, it may properly be said to be unavoidable, all other conditions of promptness in its rectification being present.[2]

While the Office is not unsympathetic to Petitioner's concerns, the averments do not appear to rise to a level to support an averment of unavoidable delay.

Thus, Petitioner has failed to support the allegation of unintentional delay.

Out of an abundance of caution, Applicants always are reminded that those registered to practice and all others who make representations before the Office are reminded to inquire into the underlying facts of representations made to the Office and support averments with the appropriate documentation–since all owe to the Office the continuing duty to disclose.[3]

The availability of applications and application papers online to applicants/practitioners who diligently associate their Customer Number with the respective application(s) now provides an applicant/practitioner on-demand information as to events/transactions in an application.

As to Allegations of
Unavoidable Delay

The requirements under 37 C.F.R. §1.137(a) have not been satisfied as of this writing in that Petitioner failed to make the showing of unavoidable delay as required.

---

[2] In re Mattullath, 38 App. D.C. 497, 514-15 (1912)(quoting Ex parte Pratt, 1887 Dec. Comm'r Pat. 31, 32-33 (1887)); see also Winkler v. Ladd, 221 F. Supp. 550, 552, 138 USPQ 666, 167-68 (D.D.C. 1963), aff'd, 143 USPQ 172 (D.C. Cir. 1963); Ex parte Henrich, 1913 Dec. Comm'r Pat. 139, 141 (1913). In addition, decisions on revival are made on a "case-by-case basis, taking all the facts and circumstances into account." Smith v. Mossinghoff, 671 F.2d 533, 538, 213 USPQ 977, 982 (D.C. Cir. 1982). Finally, a petition cannot be granted where a petitioner has failed to meet his or her burden of establishing that the delay was "unavoidable." Haines v. Quigg, 673 F. Supp. 314, 316-17, 5 USPQ2d 1130, 1131-32 (N.D. Ind. 1987).

[3] See supplement of 17 June, 1999. The Patent and Trademark Office is relying on Applicant's duty of candor and good faith and accepting a statement made by Applicant. See Changes to Patent Practice and Procedure, 62 Fed. Reg. at 53160 and 53178, 1203 Off. Gaz. Pat. Office at 88 and 103 (responses to comments 64 and 109)(applicant obligated under 37 C.F.R. §10.18 to inquire into the underlying facts and circumstances when providing statements to the Patent and Trademark Office).

CONCLUSION

Accordingly, The petition under 37 C.F.R. §1.137(a) is **dismissed**.

ALTERNATIVE VENUE

Should Applicants/Petitioner wish to revive the application, Petitioner may wish to properly file a petition to the Commissioner requesting revival of an application abandoned due to unintentional delay under 37 C.F.R. §1.137(b). (See: http://www.uspto.gov/web/offices/pac/mpep/documents/0700_711_03_c.htm#sect711.03c)

A petition to revive on the grounds of unintentional delay must be filed promptly and such petition must be accompanied by the reply, the petition fee, a terminal disclaimer and fee where appropriate and a statement that "the entire delay in filing the required reply from the due date for the reply until the filing of a grantable petition was unintentional." (The statement is in the form available online.) Petitioner should also refer to the Fee Schedule also online to determine the appropriate fees at the time of any given proposed transaction.

It also is noted that the statement of unintentional delay must be signed by the attorney under whose control the application went abandoned or by the authorized authority of the assignee—i.e., persons capable of making the statement of unintentional delay.

Further correspondence with respect to this matter should be addressed as follows:

By Mail:
Mail Stop PETITION
Commissioner for Patents
P. O. Box 1450
Alexandria, VA 22313-1450

By hand:
U. S. Patent and Trademark Office
Customer Service Window, Mail Stop Petitions
Randolph Building
401 Dulany Street
Alexandria, VA 22314

By facsimile:
(571) 273-8300
Attn: Office of Petitions

While telephone inquiries regarding this decision may be directed to the undersigned at (571) 272-3214—it is noted, however, that all practice before the Office is in writing (see: 37 C.F.R. §1.2[4]) and the proper authority for action on any matter in this regard are the statutes (35 U.S.C.), regulations (37 C.F.R.) and the commentary on policy (MPEP). Therefore, no telephone discussion may be controlling or considered authority for Petitioner's action(s).

/John J. Gillon, Jr./
John J. Gillon, Jr.
Senior Attorney
Office of Petitions

[4] The regulations at 37 C.F.R. §1.2 provide:

§1.2 Business to be transacted in writing.

All business with the Patent and Trademark Office should be transacted in writing. The personal attendance of Petitioners or their attorneys or agents at the Patent and Trademark Office is unnecessary. The action of the Patent and Trademark Office will be based exclusively on the written record in the Office. No attention will be paid to any alleged oral promise, stipulation, or understanding in relation to which there is disagreement or doubt.

UNITED STATES PATENT AND TRADEMARK OFFICE

Commissioner for Patents
United States Patent and Trademark Office
P.O. Box 1450
Alexandria, VA 22313-1450
www.uspto.gov

VAUGHAN WILLIAM WITTORFF
COMPLEX SYSTEMS RESEARCH LIMITED
5 REGENCY SQUARE
CAMBRIDGE ENG CB1 3WL GB
UNITED KINGDOM

COPY MAILED

MAR 2 3 2009

OFFICE OF PETITIONS

In re Application of	:	
Wittorff	:	
Application No. 10/684,745	:	DECISION
Filed: 14 October, 2003	:	
Attorney Docket No. 03-640	:	

This is a decision on the petition filed on 28 January, 2009, to revive an application under 37 C.F.R. §1.137(b) as having been abandoned due to unintentional delay.

The petition as considered under 37 C.F.R. §1.137(b) is **GRANTED**.

As to Allegations of
Unintentional Delay

The requirements of a grantable petition pursuant to 37 C.F.R. §1.137(b) are the petition and fee therefor, a reply, a proper statement of unintentional delay under the regulation, and, where applicable, a terminal disclaimer and fee. (However, it does not appear that a terminal disclaimer and fee are due here.)

BACKGROUND

The record reflects as follows:

Petitioner failed to reply timely and properly to the Notice of Allowance/Allowability and Fees Due mailed on 4 June, 2008, with reply due under a non-extendable deadline on or before 4 September, 2008.

The application went abandoned after midnight 4 September, 2008

The Office mailed a Notice of Abandonment on 29 September, 2008.

On 1 October, 2008, Petitioner (*pro se*) filed the a petition (supplemented on 3 October, 2008, with a letter detailing what appear to be counseling appointment dates), with fee, the reply in the form of the fees due, and made a statement of unavoidable delay, which Petitioner avers is due: (a) in part because his acquaintance who is an attorney in England was prohibited by a non-compete agreement from reminding Petitioner of the due date of the reply, and (b) in part because Petitioner experienced what he describes only as "a person (family) crisis"—a statement he supports only with a letter reporting counseling support on "13th August, 3rd September, 10th September, 17th September and 24th September" followed (the letter indicates) by an appointment scheduled for 2nd October—the day after the petition was filed and the day before the supplement (letter) was filed. Notably: there was no indication that Petitioner had a time/event conflict (*e.g.*, was in hospital or confined to bed at home) on the due date of the reply; and Petitioner was able to file the petition and the supplement in a period when he was seeking professional assistance at an even greater rate than at the due date of the reply. The showing of record was that the delay in taking action in the above-identified application was the result of Petitioner's preoccupation with other matters. Petitioner's preoccupation with other matters which took precedence over the above-identified application does not constitute unavoidable delay.[1] Decisions on reviving abandoned applications on the basis of "unavoidable" delay have adopted the reasonably prudent person standard in determining if the delay was unavoidable:

> The word 'unavoidable' . . . is applicable to ordinary human affairs, and requires no more or greater care or diligence than is generally used and observed by prudent and careful men in relation to their most important business. It permits them in the exercise of this care to rely upon the ordinary and trustworthy agencies of mail and telegraph, worthy and reliable employees, and such other means and instrumentalities as are usually employed in such important business. If unexpectedly, or through the unforeseen fault or imperfection of these agencies and instrumentalities, there occurs a failure, it may properly be said to be unavoidable, all other conditions of promptness in its rectification being present.[2]

While the Office was not unsympathetic to Petitioner's concerns, the averments did not appear to rise to a level to support an averment of unavoidable delay. The petition was dismissed on 28 November, 2008.

On 28 January, 2009, Petitioner filed, *inter alia*, a petition (with fee) pursuant to 37 C.F.R. §1.137(b) averring unintentional delay, a reply in the form of noting the previously paid fees due, and made the statement of unintentional delay.

---

[1] *See* Smith v. Mossinghoff, 671 F.2d 533, 538, 213 USPQ 977, 982 (D.C. Cir. 1982).

[2] In re Mattullath, 38 App. D.C. 497, 514-15 (1912)(quoting Ex parte Pratt, 1887 Dec. Comm'r Pat. 31, 32-33 (1887)); see also Winkler v. Ladd, 221 F. Supp. 550, 552, 138 USPQ 666, 167-68 (D.D.C. 1963), aff'd, 143 USPQ 172 (D.C. Cir. 1963); Ex parte Henrich, 1913 Dec. Comm'r Pat. 139, 141 (1913). In addition, decisions on revival are made on a "case-by-case basis, taking all the facts and circumstances into account." Smith v. Mossinghoff, 671 F.2d 533, 538, 213 USPQ 977, 982 (D.C. Cir. 1982). Finally, a petition cannot be granted where a petitioner has failed to meet his or her burden of establishing that the delay was "unavoidable." Haines v. Quigg, 673 F. Supp. 314, 316-17, 5 USPQ2d 1130, 1131-32 (N.D. Ind. 1987).

The availability of applications and application papers online to applicants/practitioners who diligently associate their Customer Number with the respective application(s) now provides an applicant/practitioner on-demand information as to events/transactions in an application.

Out of an abundance of caution, Petitioners always are reminded that those registered to practice and all others who make representations before the Office are reminded to inquire into the underlying facts of representations made to the Office and support averments with the appropriate documentation–since all owe to the Office the continuing duty to disclose.[3]

STATUTES, REGULATIONS AND ANALYSIS

Congress has authorized the Commissioner to "revive an application if the delay is shown to the satisfaction of the Commissioner to have been "unavoidable." 35 U.S.C. §133 (1994).[4] The regulations at 37 C.F.R. §1.137(a) and (b) set forth the requirements for a Petitioner to revive a previously unavoidably or unintentionally, respectively, abandoned application under this congressional grant of authority.

Unintentional delays are those that do not satisfy the very strict statutory and regulatory requirements of unavoidable delay, and also, by definition, are not intentional.[5]))

As to Allegations of Unintentional Delay

It appears that the requirements under 37 C.F.R. §1.137(b) have been satisfied.

CONCLUSION

Accordingly, the petition under 37 C.F.R. §1.137(b) is **granted**.

The instant application is released to the Office of Data Management (ODM) to be processed into a patent in due course.

---

[3] See supplement of 17 June, 1999. The Patent and Trademark Office is relying on petitioner's duty of candor and good faith and accepting a statement made by Petitioner. See Changes to Patent Practice and Procedure, 62 Fed. Reg. at 53160 and 53178, 1203 Off. Gaz. Pat. Office at 88 and 103 (responses to comments 64 and 109)(applicant obligated under 37 C.F.R. §10.18 to inquire into the underlying facts and circumstances when providing statements to the Patent and Trademark Office).

[4] 35 U.S.C. §133 provides:

35 U.S.C. §133 Time for prosecuting application.

Upon failure of the applicant to prosecute the application within six months after any action therein, of which notice has been given or mailed to the applicant, or within such shorter time, not less than thirty days, as fixed by the Commissioner in such action, the application shall be regarded as abandoned by the parties thereto, unless it be shown to the satisfaction of the Commissioner that such delay was unavoidable.

[5] Therefore, by example, an unintentional delay in the reply might occur if the reply and transmittal form are to be prepared for shipment by the US Postal Service, but other pressing matters distract one's attention and the mail is not timely deposited for shipment.

Petitioner may find it beneficial to view Private PAIR within a fortnight of the instant decision to ensure that the revival has been acknowledged by the ODM in response to this decision. It is noted that all inquiries with regard to that change in status need be directed to the ODM where that change of status must be effected—that does not occur in the Office of Petitions.

Telephone inquiries regarding this decision may be directed to the undersigned at (571) 272-3214—it is noted, however, that all practice before the Office is in writing (see: 37 C.F.R. §1.2[6]) and the proper authority for action on any matter in this regard are the statutes (35 U.S.C.), regulations (37 C.F.R.) and the commentary on policy (MPEP). Therefore, no telephone discussion may be controlling or considered authority for Petitioner's action(s).

/John J. Gillon, Jr./
John J. Gillon, Jr.
Senior Attorney
Office of Petitions

[6] The regulations at 37 C.F.R. §1.2 provide:

§1.2 Business to be transacted in writing.

All business with the Patent and Trademark Office should be transacted in writing. The personal attendance of applicants or their attorneys or agents at the Patent and Trademark Office is unnecessary. The action of the Patent and Trademark Office will be based exclusively on the written record in the Office. No attention will be paid to any alleged oral promise, stipulation, or understanding in relation to which there is disagreement or doubt.

UNITED STATES PATENT AND TRADEMARK OFFICE

UNITED STATES DEPARTMENT OF COMMERCE
United States Patent and Trademark Office
Address: COMMISSIONER FOR PATENTS
P.O. Box 1450
Alexandria, Virginia 22313-1450
www.uspto.gov

WESTMAN CHAMPLIN & KELLY, P.A.
SUITE 1400
900 SECOND AVENUE SOUTH
MINNEAPOLIS, MN 55402

Mail Date: 04/21/2010

Applicant	: Bill L. Miller	: DECISION ON REQUEST FOR
Patent Number	: 7608292	: RECALCULATION of PATENT
Issue Date	: 10/27/2009	: TERM ADJUSTMENT IN VIEW
Appliction No	: 10/684,748	: OF WYETH AND NOTICE OF INTENT TO
Filed	: 10/14/2003	: ISSUE CERTIFICATE OF CORRECTION
		:

The Request for Recalculation is **GRANTED** to the extent indicated.

The patent term adjustment has been determined to be **1167** days. The USPTO will *sua sponte* issue a certificate of correction reflecting the amount of PTA days determined by the recalculation.

Prior to the issuance of the certificate of correction, the USPTO will afford patentee an opportunity to be heard and request reconsideration. Accordingly, patentee has **one month or thirty (30) days**, whichever is longer, to file a request for reconsideration of this patent term adjustment calculation. See 35 U.S.C. 154(b)(3)(B)(ii) and 37 CFR 1.322(a)(4). No extensions of time will be granted under 37 CFR 1.136.

Patentee should use document code PET.OP if electronically filing a request for reconsideration of this patent term adjustment calculation. The patentee must also include the information required by 37 CFR 1.705(b)(2) and the fee required by 37 CFR 1.18(e). If patentee does not file a timely request for reconsideration of this patent term adjustment calculation including the information required by 37 CFR 1.705(b)(2) and the fee required by 37 CFR 1.18(e), the USPTO will issue a certificate of correction reflecting the PTA determination noted above.

Patentee should be aware that in order to preserve the right to review in the United States District Court for the District of Columbia of the USPTO patent term adjustment determination, patentee must ensure that he or she also take the steps required under 35 U.S.C. 154(b)(4)(A) in a timely manner. Nothing in the request for recalculation should be construed as providing an alternative time frame for commencing a civil action under 35 U.S.C. 154(b)(4)(A).

Any questions concerning this decision should be directed to the Office of Patent Legal Administration at 571-272-7702.

UNITED STATES PATENT AND TRADEMARK OFFICE

COMMISSIONER FOR PATENTS
UNITED STATES PATENT AND TRADEMARK OFFICE
P.O. BOX 1450
ALEXANDRIA, VA 22313-1450
www.uspto.gov

Paper No.

John Wilson Jones
Attn: IP Docketing Clerk ,
Reference 019131-02901
Locke, Liddell & Sapp LLP
600 Travis, Suite 3400
Houston, TX 77002

COPY MAILED

JUL 10 2006

OFFICE OF PETITIONS

In re Application of :
Jenkines et al. : DECISION ON PETITION
Application No. 10/684,751 :
Filed: October 14, 2003 :
Attorney Docket No. 62360A :

This is a decision on the "PETITION TO WITHDRAW THE HOLDING OF ABANDONMENT" filed May 31, 2006.

The above-identified application became abandoned for failure to file a timely and proper response to the Notice to File Missing Parts of Application mailed January 15, 2004. This Notice set a two-month time limit for response, with extensions of time obtainable under § 1.136(a). On June 17, 2004 (certificate of mailing date June 14, 2004), a response to the Notice, made timely by an accompanying petition and fee for extension for response within the third month, was received.

However, the response was deemed incomplete because it did not include the requested replacement drawings. A Notice of Incomplete Reply (Nonprovisional) was mailed June 29, 2004. This Notice stated that the period for reply continued to run as set in the January 15, 2004 Notice to File Missing Parts of Application. No reply considered received and no extension obtained, the above-identified application became abandoned on June 16, 2004. A Notice of Abandonment was mailed on April 24, 2006.

In response, petitioner timely filed the instant petition. Petitioner asserts that applicants did respond to said Office action in a timely fashion in a response, which was mailed on June 14, 2004, and received in the Patent Office on June 17, 2004. In support thereof, petitioner submits copies of the response and of their PTO stamped postcard.

As indicated above, it is undisputed that a response was received on June 17, 2004. Thus, it is acknowledged that the Notice of Abandonment was improper to the extent that it stated that no reply was received. Nonetheless, the application did become abandoned because the response was incomplete. Further, the response on petition confirms that a complete response was not received. Petitioner shows that only a declaration for patent, late surcharge and petition for extension of time were filed in response to the Notice. As no replacement drawings were filed and petitioner has provided no reason why the failure to file the drawings should be excused, the application is considered properly abandoned. Withdrawal of the holding of abandonment is not warranted.

The petition under § 1.181 is **DISMISSED**.

Any request for reconsideration must be submitted within **TWO (2) MONTHS** from the mail date of this decision. Extensions of time under 37 C.F.R. §1.136(a) are not permitted. See 1.181(f).

Alternatively, applicant may seek revival under the provisions of 37 CFR 1.137. Such a request should include a cover letter entitled "Petition under 37 C.F.R. § 1.137(a)" or "Petition under 37 C.F.R. § 1.137(b)," as appropriate.

Further correspondence with respect to this decision should be addressed as follows:

By mail: Mail Stop Petition
Commissioner for Patents
P.O. Box 1450
Alexandria, VA 22313-1450

By fax: (571) 273-8300
ATTN: Office of Petitions

By hand: Customer Service Window
Randolph Building
401 Dulany Street
Alexandria, VA 22314

Telephone inquiries specific to this decision should be directed to the undersigned at (571) 272-3219.

Nancy Johnson
Senior Petitions Attorney
Office of Petitions

UNITED STATES PATENT AND TRADEMARK OFFICE

COMMISSIONER FOR PATENTS
UNITED STATES PATENT AND TRADEMARK OFFICE
P.O. BOX 1450
ALEXANDRIA, VA 22313-1450
www.uspto.gov

Paper No.

John Wilson Jones
Attn: IP Docketing Clerk ,
Reference 019131-02901
Locke, Liddell & Sapp LLP
600 Travis, Suite 3400
Houston, TX 77002

COPY MAILED

NOV 0 9 2006

OFFICE OF PETITIONS

In re Application of :
Jenkines et al. : DECISION ON PETITION
Application No. 10/684,751 :
Filed: October 14, 2003 :
Attorney Docket No. 62360A :

This is a decision on the "PETITION FOR REVIVAL OF AN APPLICATION FOR PATENT ABANDONED UNINTENTIONALLY UNDER 37 CFR §1.137(b)" filed September 18, 2006.

The petition under § 1.137(b) is **GRANTED**.

The above-identified application became abandoned for failure to file a timely and proper response to the Notice to File Missing Parts of Application mailed January 15, 2004. By decision mailed July 10, 2006, a prior PETITION TO WITHDRAW THE HOLDING OF ABANDONMENT filed May 31, 2006 was dismissed.

The petition includes the required reply in the form of replacement drawings, payment of the petition fee and the required statement of unintentional delay. Petitioner has met the requirements for revival pursuant to § 1.137(b).

Telephone inquiries specific to this decision should be directed to the undersigned at (571) 272-3219.

Nancy Johnson
Senior Petitions Attorney
Office of Petitions

UNITED STATES PATENT AND TRADEMARK OFFICE

Commissioner for Patents
United States Patent and Trademark Office
P.O. Box 1450
Alexandria, VA 22313-1450
www.uspto.gov

Roger R. Wise
PILLSBURY WINTHROP LLP
Suite 2800
725 South Figueroa Street
Los Angeles, CA 90017-5406

COPY MAILED

MAR 1 0 2005

OFFICE OF PETITIONS

In re Application of :
Teshima Masao :
Application No. 10/684,758 :
Filed: October 14, 2003 :
Attorney Docket No. 85013-0306201 :

DECISION GRANTING PETITION

This is a decision on the petition filed February 2, 2004, requesting that the above-identified application be accorded a filing date of October 14, 2003, with 16 pages of the specification, 7 pages of claims, 1 page of abstract, as part of the original disclosure.

On October 14, 2003, the above-identified application was filed. On January 16, 2004, the Office of Initial Patent Examination mailed a "Notice of Incomplete Nonprovisional Application " (the "Notice"), stating that the application had not been accorded a filing date because the specification was not found with the application papers. The Notice also indicated that the oath or declaration was missing. The Notice allowed a non-extendable two-month period for reply beginning from the mailing date of the Notice.

In response, on February 2, 2004, applicant filed the present petition, a copy of the complete application papers, and a copy of the Office date-stamped postcard receipt acknowledging receiving 16 pages of the specification, 7 pages of claims, 1 page of abstract, and an oath or declaration, along with other items on October 14, 2003.

Upon review of the record, the alleged missing items were not located among the original application papers. The evidence is convincing, however, that the specification, abstract, and declaration accompanied the original application papers. Therefore, the application, including 16 pages of the specification, 7 pages of claims, 1 page of abstract, and 2 pages of the declaration was complete on filing and entitled to a filing date of October 14, 2003.

Accordingly, the petition is granted. The petition fee of $130.00 will be refunded, in due course.

The application file is being returned to the Office of Initial Patent Examination for further processing with a filing date of October 14, 2003, using the 16 pages of the specification, 7 pages of claims, 1 page of abstract, and declaration filed on that date.

Any inquiries related to this decision should be directed to the undersigned at (571) 272-3222.

Kenya A. McLaughlin
Petitions Attorney
Office of Petitions

UNITED STATES PATENT AND TRADEMARK OFFICE

UNITED STATES DEPARTMENT OF COMMERCE
United States Patent and Trademark Office
Address: COMMISSIONER FOR PATENTS
P.O. Box 1450
Alexandria, Virginia 22313-1450
www.uspto.gov

RG and Associates
1103 Twin Creeks
Allen, TX 75013

Mail Date: 05/25/2010

Applicant	: Chiang Yeh	: DECISION ON REQUEST FOR
Patent Number	: 7631096	: RECALCULATION of PATENT
Issue Date	: 12/08/2009	: TERM ADJUSTMENT IN VIEW
Application No	: 10/684,772	: OF WYETH AND NOTICE OF INTENT TO
Filed	: 10/14/2003	: ISSUE CERTIFICATE OF CORRECTION
		:

The Request for Recalculation is **GRANTED** to the extent indicated.

The patent term adjustment has been determined to be **1818** days. The USPTO will *sua sponte* issue a certificate of correction reflecting the amount of PTA days determined by the recalculation.

Prior to the issuance of the certificate of correction, the USPTO will afford patentee an opportunity to be heard and request reconsideration. Accordingly, patentee has **one month or thirty (30) days**, whichever is longer, to file a request for reconsideration of this patent term adjustment calculation. See 35 U.S.C. 154(b)(3)(B)(ii) and 37 CFR 1.322(a)(4). No extensions of time will be granted under 37 CFR 1.136.

Patentee should use document code PET.OP if electronically filing a request for reconsideration of this patent term adjustment calculation. The patentee must also include the information required by 37 CFR 1.705(b)(2) and the fee required by 37 CFR 1.18(e). If patentee does not file a timely request for reconsideration of this patent term adjustment calculation including the information required by 37 CFR 1.705(b)(2) and the fee required by 37 CFR 1.18(e), the USPTO will issue a certificate of correction reflecting the PTA determination noted above.

Patentee should be aware that in order to preserve the right to review in the United States District Court for the District of Columbia of the USPTO patent term adjustment determination, patentee must ensure that he or she also take the steps required under 35 U.S.C. 154(b)(4)(A) in a timely manner. Nothing in the request for recalculation should be construed as providing an alternative time frame for commencing a civil action under 35 U.S.C. 154(b)(4)(A).

Any questions concerning this decision should be directed to the Office of Patent Legal Administration at 571-272-7702.

UNITED STATES PATENT AND TRADEMARK OFFICE

Commissioner for Patents
United States Patent and Trademark Office
P.O. Box 1450
Alexandria, VA 22313-1450
www.uspto.gov

WOODCOCK WASHBURN LLP
CIRA CENTRE, 12TH FLOOR
2929 ARCH STREET
PHILADELPHIA PA 19104-2891

COPY MAILED
MAR 3 1 2008

In re Application of :

DONDERO, et al. :
Application No. 10/684,774 : DECISION ON PETITION
Filed: October 14, 2003 : TO WITHDRAW
Attorney Docket No. **CELL-0276** : FROM RECORD
:

This is a decision on the Request to Withdraw as attorney or agent of record under 37 C.F.R. § 1.36(b), filed October 1, 2007.

The request is **NOT APPROVED.**

A grantable request to withdraw as attorney/agent of record must be signed by every attorney/agent seeking to withdraw or contain a clear indication that one attorney is signing on behalf of another/others. A request to withdraw will not be approved unless at least 30 (thirty) days would remain between the date of approval and the later of the expiration date of a time to file a response or the expiration date of the maximum time period which can be extended under 37 C.F.R. § 1.136(a).

The Office cannot approve the request at this time since the reasons provided do not meet any of the conditions under the mandatory or permissive categories enumerated in 37 CFR 10.40. Section 10.40 of Title 37 of the Code of Federal Regulation states, "[a] practitioner shall not withdraw from employment in a proceeding before the Office without permission from the Office[.]" More specifically, 37 CFR 10.40 states, "[i]f paragraph (b) of this section is not applicable, a practitioner may not request permission to withdraw in matter pending before the Office unless such request or such withdrawal is" for one the permissive reasons listed in 37 CFR 10.40(c). The reason set forth in the request, "no longer represents this client", does not meet any of the conditions set forth in 37 CFR 10.40.

All future communications from the Office will continue to be directed to the above-listed address until otherwise notified by applicant.

Telephone inquiries concerning this decision should be directed to the undersigned at 571-272-7253.

Monica A. Graves
Petitions Examiner
Office of Petitions

cc: **MICHAEL S. GREENFIELD**
MCDONNELL BOEHNEN HULBERT & BERGHOFF, LLP
300 S. WACKER DRIVE
CHICAGO, IL 60606

UNITED STATES PATENT AND TRADEMARK OFFICE

COMMISSIONER FOR PATENTS
UNITED STATES PATENT AND TRADEMARK OFFICE
P.O. BOX 1450
ALEXANDRIA, VA 22313-1450
WWW.USPTO.GOV

Paper No. None

Jonathan David Garman
772 Lucerne Drive
Sunnyvale CA 94085

COPY MAILED
AUG 22 2006
OFFICE OF PETITIONS

In re Application of :
Jonathan David Garman et al. :
Application No. 10/684,796 : DECISION ON PETITION
Filed: October 14, 2003 : UNDER 37 C.F.R. §1.137(B)
Attorney Docket Number: AVC72 :
Title: MODULATION OF SIGNAL :
TRANSDUCTION PATHWAYS :

This is a decision on the petition filed April 25, 2006, pursuant to 37 C.F.R. §1.137(b)[1], to revive the above-identified application.

The above-identified application became abandoned for failure to file a proper response to the Restriction Requirement, mailed October 3, 2005, which set a shortened statutory period to reply for one month. No extensions of time under the provisions of 37 C.F.R. 1.136(a) were received. Accordingly, the above-identified application became abandoned on November 4, 2005.

With the present petition, Petitioner submitted the petition fee, a response to the restriction requirement, and the proper

1 A grantable petition pursuant to 37 C.F.R 1.137(b) must be accompanied by:
(1) The reply required to the outstanding Office action or notice, unless previously filed;
(2) The petition fee as set forth in § 1.17(m);
(3) A statement that the entire delay in filing the required reply from the due date for the reply until the filing of a grantable petition pursuant to this paragraph was unintentional. The Commissioner may require additional information where there is a question whether the delay was unintentional, and;
(4) Any terminal disclaimer (and fee as set forth in § 1.20(d)) required pursuant to paragraph (d) of this section.

statement of unintentional delay. No terminal disclaimer is required.

As such, the petition under 37 C.F.R. §1.137(b) is **GRANTED**.

The Technology Center will be notified of this decision. The Technology Center's support staff will notify the Examiner of this decision, so that the response to the restriction requirement which was submitted concurrently with the present petition can be processed.

Telephone inquiries regarding *this decision* should be directed to the undersigned at (571) 272-3225[2]. All other inquiries concerning examination procedures or status of the application should be directed to the Technology Center.

Paul Shanoski
Senior Attorney
Office of Petitions
United States Patent and Trademark Office

2 Petitioner will note that all practice before the Office should be in writing, and the action of the Office will be based exclusively on the written record in the Office. See 37 C.F.R. §1.2. As such, Petitioner is reminded that no telephone discussion may be controlling or considered authority for Petitioner's further action(s).

UNITED STATES PATENT AND TRADEMARK OFFICE

Commissioner for Patents
United States Patent and Trademark Office
P.O. Box 1450
Alexandria, VA 22313-1450
www.uspto.gov

COPY MAILED

SEP 21 2006

OFFICE OF PETITIONS

BOZICEVIC FIELD & FRANCIS LLP
1900 UNIVERSITY AVENUE, SUITE 200
EAST PALO ALTO, CA 94303

In re Application of :
Jonathan David Garman et al :
Application No. 10/684,796 : DECISION ON PETITION
Filed: October 14, 2003 : TO WITHDRAW
Attorney Docket No. AVC72 : FROM RECORD
:

This is a decision on the Request to Withdraw as attorney or agent of record under 37 C.F.R. § 1.36(b), filed May 11, 2006.

The request is **APPROVED**.

A grantable request to withdraw as attorney/agent of record must be signed by every attorney/agent seeking to withdraw or contain a clear indication that one attorney is signing on behalf of another/others. A request to withdraw will not be approved unless at least 30 (thirty) days would remain between the date of approval and the later of the expiration date of a time to file a response or the expiration date of the maximum time period which can be extended under 37 C.F.R. § 1.136(a).

The request was signed by James S. Keddie on behalf of all attorneys of record who are associated with Customer No. 24353.

Applicant is reminded that there is no attorney of record at this time.

The request to change the correspondence of record is not acceptable as the requested correspondence address is not that of: (1) the first named signing inventor; or (2) an intervening assignee of the entire interest under 37 C.F.R 3.71. All future communications from the Office will be directed to the first named signing inventor or the assignee of the entire interest at the first copied address below until otherwise properly notified by the applicant.

Telephone inquiries concerning this decision should be directed to Irvin Dingle at (571) 272-3210.

/ Denise Pothier /
Petitions Examiner
Office of Petitions

cc: Jonathan David Garman
772 Lucerne Drive
Sunnyvale, CA 94085

cc: Joseph Liebeschuetz, Ph.D.
Townsend & Townsend & Crew LLP
379 Lytton Avenue
Palo Alto, CA 94301-1431

UNITED STATES PATENT AND TRADEMARK OFFICE

Commissioner for Patents
United States Patent and Trademark Office
P.O. Box 1450
Alexandria, VA 22313-1450
www.uspto.gov

FOLEY AND LARDNER LLP
SUITE 500
3000 K STREET NW
WASHINGTON, DC 20007

COPY MAILED

JUL 29 2009

OFFICE OF PETITIONS

In re Application of :
Johna Leddy, et al. :
Application No. 10/684,802 : DECISION ON PETITION
Filed: October 15, 2003 :
Attorney Docket No. 092490-0179 :

This is a decision on the petition under the unintentional provisions of 37 CFR 1.137(b), filed June 4, 2009, to revive the above-identified application.

The petition is **DISMISSED.**

Any request for reconsideration of this decision must be submitted within TWO (2) MONTHS from the mail date of this decision. Extensions of time under 37 CFR 1.136(a) are permitted. The reconsideration request should include a cover letter entitled "Renewed Petition under 37 CFR 1.137(b)." This is **not** a final agency action within the meaning of 5 U.S.C. § 704.

The application became abandoned for failure to timely reply within the meaning of 37 CFR 1.113 to the final Office action, mailed September 29, 2006, which set a shortened statutory period for reply of three (3) months. In view of the timely 3-month petition for extension of time, the application became abandoned on March 30, 2007. A Notice of Abandonment was mailed on June 5, 2007. On June 3, 2009, the present petition was filed.

A grantable petition under 37 CFR 1.137(b) must be accompanied by: (1) the required reply, unless previously filed; (2) the petition fee as set forth in 37 CFR 1.17(m); (3) a statement that the entire delay in filing the required reply from the due date for the reply until the filing of a grantable petition pursuant to 37 CFR 1.137(b) was unintentional; and (4) any terminal disclaimer (and fee as set forth in 37 CFR 1.20(d)) required by 37 CFR 1.137(d). Where there is a question as to whether either

the abandonment or the delay in filing a petition under 37 CFR 1.137 was unintentional, the Director may require additional information. *See* MPEP 711.03(c)(II)(C) and (D). The instant petition lacks item (3).

There are three periods to be considered during the evaluation of a petition under 37 CFR 1.137(b):

(1) the delay in reply that originally resulted in the abandonment;

(2) the delay in filing an initial petition pursuant to 37 CFR 1.137(b) to revive the application; and

(3) the delay in filing a grantable petition pursuant to 37 CFR 1.137(b) to revive the application.

Currently, the delay has not been shown to the satisfaction of the Director to be unintentional for periods (1) and (2).

As to Period (1):

The patent statute at 35 U.S.C. § 41(a)(7) authorizes the Director to revive an "unintentionally abandoned application." The legislative history of Public Law 97-247 reveals that the purpose of 35 U.S.C. § 41(a)(7) is to permit the Office to have more discretion than in 35 U.S.C. §§ 133 or 151 to revive abandoned applications in appropriate circumstances, but places a limit on this discretion, stating that "[u]nder this section a petition accompanied by either a fee of $500 or a fee of $50 **would not be granted where the abandonment** or the failure to pay the fee for issuing the patent **was intentional** as opposed to being unintentional or unavoidable." [emphasis added]. See H.R. Rep. No. 542, 97th Cong., 2d Sess. 6-7 (1982), *reprinted in* 1982 U.S.C.C.A.N. 770-71. The revival of an intentionally abandoned application is antithetical to the meaning and intent of the statute and regulation.

35 U.S.C. § 41(a)(7) authorizes the Director to accept a petition "for the revival of an unintentionally abandoned application for a patent." As amended December 1, 1997, 37 CFR 1.137(b)(3) provides that a petition under 37 CFR 1.137(b) must be accompanied by a statement that the delay was unintentional, but

provides that "[t]he Director may require additional information where there is a question whether the delay was unintentional." Where, as here, there is a question whether the initial delay was unintentional, the petitioner must meet the burden of establishing that the delay was unintentional within the meaning of 35 U.S.C. § 41(a)(7) and 37 CFR 1.137(b). *See* In re Application of G, 11 USPQ2d 1378, 1380 (Comm'r Pats. 1989); 37 CFR 1.137(b). Here, in view of the inordinate delay (over two years) in resuming prosecution, there is a question whether the entire delay was unintentional. Petitioner should note that the issue is not whether some of the delay was unintentional by any party; rather, the issue is whether the entire delay has been shown to the satisfaction of the Director to be unintentional.

The question under 37 CFR 1.137(b) for period (1) is whether the delay on the part of the party having the right or authority to reply to avoid abandonment (or not reply) was unintentional. Accordingly, any renewed petition must clearly identify the party having the right to reply to avoid abandonment on March 30, 2007. That party, in turn must explain what effort(s) was made to further reply to the outstanding Office action and, further, why no reply was filed. If no effort was made to further reply, then that party must explain why the delay in this application does not result from a deliberate course of action (or inaction). Likewise, as Ked & Associates, LLP were the counsel of record at the time of abandonment, they should explain why this application became abandoned while under their control. Copies of any correspondence relating to the filing, or to not filing a further reply to the outstanding Office action are required from responsible person(s), and whoever else was involved with this application at the time of abandonment. Further, statements are required from Ked & Associates, LLP and any responsible person(s) having firsthand knowledge of the circumstances surrounding the lack of a reply to the outstanding Office action. As the courts have made clear, it is pointless for the USPTO to revive a long abandoned application without an adequate showing that the delay did not result from a deliberate course of action. *See* Lawman Armor v. Simon, 2005 U.S. Dist. LEXIS 10843, 74 USPQ2d 1633 (DC EMich 2005); Field Hybrids, LLC v. Toyota Motor Corp., 2005 U.S. Dist. LEXIS 1159 (D. Minn Jan. 27, 2005); Lumenyte Int'l Corp. v. Cable Lite Corp., Nos. 96-1011, 96-1077, 1996 U.S. App. LEXIS 16400, 1996 WL 383927 (Fed. Cir. July 9, 1996) (unpublished) (patents held unenforceable due to a finding of inequitable conduct in submitting an inappropriate statement that the abandonment was unintentional).

As to Period (2):

Likewise, where the applicant deliberately chooses not to seek or persist in seeking the revival of an abandoned application, or where the applicant deliberately chooses to delay seeking the revival of an abandoned application, the resulting delay in seeking revival of the abandoned application cannot be considered as "unintentional" within the meaning of 37 CFR 1.137(b). *See* MPEP 711.03(c).

The language of both 35 U.S.C. § 41(a)(7) and 37 CFR 1.137(b) are clear and unambiguous, and, furthermore, without qualification. That is, the delay in filing the reply during prosecution, as well as in filing the petition seeking revival, must have been, without qualification, "unintentional" for the reply to now be accepted on petition. The Office requires that the entire delay be at least unintentional as a prerequisite to revival of an abandoned application to prevent abuse and injury to the public. *See* H.R. Rep. No. 542, 97th Cong., 2d Sess. 7 (1982), reprinted in 1982 U.S.C.C.A.N. 771 ("[i]n order to prevent abuse and injury to the public the Commissioner . . . could require applicants to act promptly after becoming aware of the abandonment"). The December 1997 change to 37 CFR 1.137 did not create any new right to overcome an intentional delay in seeking revival, or in renewing an attempt at seeking revival, of an abandoned application. *See* Changes to Patent Practice and Procedure; Final Rule Notice, 62 Fed. Reg. 53131, 53160 (October 10, 1997), 1203 Off. Gaz. Pat. Office 63, 87 (October 21, 1997), which clearly stated that any protracted delay (here, over two years) could trigger, as here, a request for additional information. As the courts have since made clear, a protracted delay in seeking revival, as here, requires a petitioner's detailed explanation seeking to excuse the delay as opposed to USPTO acceptance of a general allegation of unintentional delay. *See* Lawman Armor v. Simon, 2005 U.S. Dist. LEXIS 10843, 74 USPQ2d 1633, at 1637-8 (DC EMich 2005); Field Hybrids, LLC v. Toyota Motor Corp., 2005 U.S. Dist. LEXIS 1159 (D. Minn Jan. 27, 2005) at *21-*23. Statements are required from any and all responsible person(s) having firsthand knowledge of the circumstances surrounding the protracted delay, after the abandonment date, in seeking revival.

As noted in MPEP 711.03(c)(II), subsection D, in instances in which such petition was not filed within 1 year of the date of abandonment of the application, applicants should include:

(A) the date that the applicant first became aware of the abandonment of the application; and
(B) a showing as to how the delay in discovering the abandoned status of the application occurred despite the exercise of due care or diligence on the part of the applicant.

In either instance, applicant's failure to carry the burden of proof to establish that the "entire" delay was "unavoidable" or "unintentional" may lead to the denial of a petition under 37 CFR 1.137(b), regardless of the circumstances that originally resulted in the abandonment of the application. *See also* New York University v. Autodesk, 2007 U.S. DIST LEXIS, U.S.District LEXIS 50832, *10 -*12 (S.D.N.Y. 2007)(protracted delay in seeking revival undercuts assertion of unintentional delay).

Further correspondence with respect to this matter should be delivered through one of the following mediums:

By mail: Mail Stop PETITIONS
Commissioner for Patents
Post Office Box 1450
Alexandria, VA 22313-1450

By hand: Customer Service Window
Mail Stop Petitions
Randolph Building
401 Dulany Street
Alexandria, VA 22314

By fax: (571) 273-8300
ATTN: Office of Petitions

By Internet: EFS-Web[1]

[1] www.uspto.gov/ebc/efs_help.html (for help using EFS-Web call the Patent Electronic Business Center at (866) 217-9197)

Telephone inquiries concerning this decision should be directed to the undersigned at (571) 272-3204.

Sherry D. Brinkley
Petitions Examiner
Office of Petitions

UNITED STATES PATENT AND TRADEMARK OFFICE

Commissioner for Patents
United States Patent and Trademark Office
P.O. Box 1450
Alexandria, VA 22313-1450
www.uspto.gov

FOLEY AND LARDNER LLP
SUITE 500
3000 K STREET NW
WASHINGTON, DC 20007

COPY MAILED
MAR 11 2010

In re Application of
John A. Leddy, et al.
Application No. 10/684,802
Filed: October 15, 2003
Attorney Docket No. 092490-0179

ON PETITION

This is a decision in response to the renewed petition, filed January 29, 2010, to revive the above-identified application under the provisions of 37 CFR 1.137(b).

The petition is **GRANTED**.

A review of the record discloses that this application became abandoned for failure to timely reply within the meaning of 37 CFR 1.113 to the final Office action mailed September 29, 2006. A Notice of Abandonment was mailed on June 5, 2007. On June 4, 2009, a petition to revive under 37 CFR 1.137(b) was filed; however, the petition was dismissed in a decision mailed July 29, 2009. In response, on January 29, 2010, the present petition was filed, including an explanation of the entire delay.

This application has been abandoned for an extended period of time. The U.S. Patent and Trademark Office is relying on petitioner's duty of candor and good faith and accepting the statement that "the entire delay in filing the required reply from the due date for the reply until the filing of a grantable petition pursuant to 37 CFR 1.137(b) was unintentional." *See* Changes to Patent Practice and Procedure, 62 Fed. Reg., at 53160 and 53178; 1203 Off. Gaz. Pat. Office, at 88 and 103 (responses to comments 64 and 109) (applicant obligated under 37 CFR 10.18 to inquire into the underlying facts and circumstances when providing the statement required by 37 CFR 1.137(b) to the U.S. Patent and Trademark Office).

The petition satisfies the requirements of 37 CFR 1.137(b) in that petitioner has supplied (1) the reply in the form of a Request for Continued Examination (RCE) and fee of $405, and the submission required by 37 CFR 1.114; (2) the petition fee of $810; and (3) an adequate statement of unintentional delay.

This application is being referred to Technology Center AU 1745 for processing of the RCE and for appropriate action by the Examiner in the normal course of business on the amendment submitted in accordance with 37 CFR 1.114.

Telephone inquiries concerning this decision should be directed to the undersigned at (571) 272-3204. Inquiries relating to further prosecution should be directed to the Technology Center.

Sherry D. Brinkley
Petitions Examiner
Office of Petitions

UNITED STATES PATENT AND TRADEMARK OFFICE

Commissioner for Patents
United States Patent and Trademark Office
P.O. Box 1450
Alexandria, VA 22313-1450
www.uspto.gov

FOLEY AND LARDNER LLP
SUITE 500
3000 K STREET NW
WASHINGTON, DC 20007

COPY MAILED

MAR 21 2008

OFFICE OF PETITIONS

In re Application of :

HERSHKOWITZ, Brian F. et al. :
Application No. 10/684,804 : DECISION ON PETITION
Filed: October 15, 2003 : TO WITHDRAW
Attorney Docket No. **027776-0109** : FROM RECORD
:

This is a decision on the Request to Withdraw as attorney or agent of record under 37 C.F.R. § 1.36(b), filed January 07, 2008.

The request is **APPROVED**.

A grantable request to withdraw as attorney/agent of record must be signed by every attorney/agent seeking to withdraw or contain a clear indication that one attorney is signing on behalf of another/others. A request to withdraw will not be approved unless at least 30 (thirty) days would remain between the date of approval and the later of the expiration date of a time to file a response or the expiration date of the maximum time period which can be extended under 37 C.F.R. § 1.136(a).

The request was signed by Richard C. Peet on behalf of all attorneys of record who are associated with customer No. 22428. All attorneys/agents associated have been withdrawn. Applicant is reminded that there is no attorney of record at this time.

The request to change the correspondence of record is not acceptable as the requested correspondence address is not that of: (1) the first named signing inventor; or (2) an intervening assignee of the entire interest under 37 C.F.R 3.71. All future communications from the Office will be directed to the first named signing inventor.

There is an outstanding Office action mailed October 29, 2007 that requires a reply from the applicant.

Telephone inquiries concerning this decision should be directed to the undersigned at 571-272-4231.

Michelle R. Eason
Paralegal Specialist
Office of Petitions

cc: **BRIAN F. HERSHKOWITZ**
1022 GARCIA ROAD
SANTA BARBARA, CA 93103

cc: **MICHAEL L. GRAVELLE, ESQ.**
FIDELITY NATIONAL INFORMATION SOLUTIONS, INC.
601 RIVERSIDE AVENUE
JACKSONVILLE, FL 32204

UNITED STATES PATENT AND TRADEMARK OFFICE

Commissioner for Patents
United States Patent and Trademark Office
P.O. Box 1450
Alexandria, VA 22313-1450
www.uspto.gov

WILMERHALE/NEW YORK
399 PARK AVENUE
NEW YORK NY 10022

MAILED

MAR 0 2 2010

OFFICE OF PETITIONS

In re Application :
Vincent Armentano et al. :
Application No. 10/648,808 : DECISION ON APPLICATION
Filed: August 27, 2003 : FOR PATENT TERM ADJUSTMENT
Attorney Docket No. **2003536.129 US2** :

This is in response to the APPLICATION FOR PATENT TERM ADJUSTMENT AND REQUEST FOR RECONSIDERATION OF THE PATENT TERM ADJUSTMENT UNDER 37 C.F.R. §§ 1.702-1.705 filed November 9, 2009. Applicant requests that the determination of patent term adjustment be corrected from 1077 days to 1633 days. Applicant requests this correction in part on the basis that the Office will take in excess of three years to issue this patent and in light of the court decision in Wyeth v. Dudas, No. 07-1492 (D.D.C. September 30, 2008).[1]

As the instant application for patent term adjustment requests reconsideration of the patent term adjustment as it relates to the Office's failure to issue the patent within three years of the filing date, the application for patent term adjustment under 37 CFR 1.705(b) is **DISMISSED as PREMATURE**.

Knowledge of the actual date the patent issues is required to calculate the amount, if any, of additional patent term patentees are entitled to for Office failure to issue the patent within three years. See 37 CFR 1.702(b). (This is true even where a request for continued examination (RCE) was filed). The computer will not undertake the § 1.702(b) calculation until the actual date of issuance of the patent has been determined. Likewise, the computer will not calculate any further Office delay under 37 CFR 1.702(a)(4) or applicant delay under 37 CFR 1.704(c)(10) until the actual date of issuance of the patent has been determined. As such, the Office cannot make a determination on the of the patent term adjustment concerning those regulations until the patent has issued.

[1]Reconsidered in light of the Court of Appeals for the Federal Circuit's decision in *Wyeth v. Kappos*, 2009-1120 (Fed. Cir. 1-7-2010).

Requesting reconsideration of the patent term adjustment to be indicated on the patent under 37 CFR 1.705(b) based on the initial determination of patent term adjustment and a projected issuance date of the patent (or even the filing date of the request for continued examination) is premature. Accordingly, it is appropriate to dismiss such a request as premature.

Rather than file an application for patent term adjustment under 37 CFR 1.705(b) contesting the 37 CFR 1.702(b) calculation at the time of the mailing of the notice of allowance, applicants are advised that they may wait until the time of the issuance of the patent and file a request for reconsideration of the patent term adjustment pursuant to 37 CFR 1.705(d). As the USPTO does not calculate the amount of time earned pursuant to 37 CFR 1.702(b) until the time of the issuance of the patent, the Office will consider any request for reconsideration of the patent term adjustment due to an error in the calculation of 37 CFR 1.702(b) to be timely if the request for reconsideration is filed within two months of the issuance of the patent. However, as to all other bases for contesting the initial determination of patent term adjustment received with the notice of allowance, applicants must timely file an application for patent term adjustment prior to the payment of the issue fee.[2]

The Office acknowledges submission of the $200.00 fee set forth in 37 CFR 1.18(e) for consideration of the application for patent term adjustment under 37 CFR 1.705(b).

Any request for reconsideration of the patent term adjustment indicated on the patent must be timely filed within two months after issuance pursuant to 37 CFR 1.705(d) and must include payment of the required fee under 37 CFR 1.18(e).

The Office of Data Management has been advised of this decision. This application is being referred to the Office of Data Management for issuance of the patent.

Telephone inquiries specific to this decision should be directed to Senior Petitions Attorney Patricia Faison-Ball at (571) 272-3212.

/Kery A. Fries/

Kery A. Fries
Senior Legal Advisor
Office of Patent Legal Administration
Office of Deputy Commissioner
for Examination Policy

---

[2] For example, if applicants dispute both the calculation of patent term adjustment under 37 CFR 1.702(a)(1) for Office failure to mail a first Office action or notice of allowance not later than fourteen months after the date on which the application was filed, and under 37 CFR 1.702(b) for Office failure to issue a patent within three years of the actual filing date of the application, then applicants must still timely file an application for patent term adjustment prior to the payment of the issue fee to contest the calculation of Office delay in issuing a first Office action or notice of allowance. See 37 CFR 1.705(b) and 35 U.S.C. 154(b)(3)(B). A dispute as to the calculation of the § 1.702(a)(1) period raised on request for reconsideration of patent term adjustment under 37 CFR 1.705(d) will be dismissed as untimely filed.

UNITED STATES PATENT AND TRADEMARK OFFICE

Commissioner for Patents
United States Patent and Trademark Office
P.O. Box 1450
Alexandria, VA 22313-1450
www.uspto.gov

CROWELL & MORING LLP
INTELLECTUAL PROPERTY GROUP
PO BOX 14300
WASHINGTON, DC 20044-4300

COPY MAILED

MAR 27 2006

OFFICE OF PETITIONS

In re Application of :
Koki Ishizaki et al :
Application No. 10/684,812 : DECISION GRANTING PETITION
Filed: October 15, 2003 : UNDER 37 CFR 1.313(c)(2)
Attorney Docket No. 056203.52845US :

This is a decision on the petition, filed March 24, 2006, under 37 CFR 1.313(c)(2) to withdraw the above-identified application from issue after payment of the issue fee.

The petition is **GRANTED**.

The above-identified application is withdrawn from issue for consideration of a submission under 37 CFR 1.114 (request for continued examination). See 37 CFR 1.313(c)(2).

Petitioner is advised that the issue fee paid on February 10, 2006 in the above-identified application cannot be refunded. If, however, the above-identified application is again allowed, petitioner may request that it be applied towards the issue fee required by the new Notice of Allowance.[1]

Telephone inquiries should be directed to the undersigned at (571) 272-3218.

This matter is being referred to Technology Center AU 2823 for processing of the request for continued examination under 37 CFR 1.114 and for consideration of the Information Disclosure Statement.

Frances Hicks
Petitions Examiner
Office of Petitions

C:\Documents and Settings\FHicks\My Documents\470\Mar9\684812.wpd

---

[1] *The request to apply the issue fee to the new Notice may be satisfied by completing and returning the new Part B – Fee(s) Transmittal Form (along with any balance due at the time of submission), which includes the following language thereon: "The Director of the USPTO is requested to apply the Issue Fee and Publication Fee (if any) or to re-apply any previously paid issue fee in the application identified above. Petitioner is advised that, whether a fee is indicated as being due or not, the Issue Fee Transmittal Form* ***must*** *be completed and timely submitted to avoid abandonment. Note the language in bold text on the first page of the Notice of Allowance and Fee(s) Due (PTOL-85).*

UNITED STATES PATENT AND TRADEMARK OFFICE

Commissioner for Patents
United States Patent and Trademark Office
P.O. Box 1450
Alexandria, VA 22313-1450
www.uspto.gov

SUGHRUE MION, PLLC
2100 PENNSYLVANIA AVENUE, N.W.
WASHINGTON, DC 20037

COPY MAILED

DEC 2 0 2007

OFFICE OF PETITIONS

In re Application of :
Masahiko Yoshida :
Application No. 10/684,822 : DECISION GRANTING PETITION
Filed: October 15, 2003 : UNDER 37 CFR 1.313(c)(2)
Attorney Docket No. Q77654 :

This is a decision on the petition under 37 CFR 1.313(c)(2), filed December 18, 2007, to withdraw the above-identified application from issue after payment of the issue fee.

The petition is **GRANTED**.

The above-identified application is withdrawn from issue for consideration of a submission under 37 CFR 1.114 (request for continued examination). *See* 37 CFR 1.313(c)(2).

Petitioner is advised that the issue fee paid on December 7, 2007 cannot be refunded. If, however, this application is again allowed, petitioner may request that it be applied towards the issue fee required by the new Notice of Allowance.[1]

Telephone inquiries regarding this decision should be directed to April Wise at (571) 272-1642.

This application is being referred to Technology Center AU 2853 for processing of the request for continued examination under 37 CFR 1.114 and for consideration of the concurrently filed information disclosure statement.

Frances M. Hicks
Petitions Examiner
Office of Petitions

[1] *The request to apply the issue fee to the new Notice may be satisfied by completing and returning the new Part B – Fee(s) Transmittal Form (along with any balance due at the time of submission). Petitioner is advised that the Issue Fee Transmittal Form* ***must*** *be completed and timely submitted to avoid abandonment of the application.*

UNITED STATES PATENT AND TRADEMARK OFFICE

Commissioner for Patents
United States Patent and Trademark Office
P.O. Box 1450
Alexandria, VA 22313-1450
www.uspto.gov

FINNEGAN, HENDERSON, FARABOW,
GARRETT & DUNNER
LLP
901 NEW YORK AVENUE, NW
WASHINGTON DC 20001-4413

MAILED

JUN 29 2009

OFFICE OF PETITIONS

In re Patent No. 7,364,894	:	ON PETITIONS
Fabienne Soubrier	:	Under 37 CFR 1.183
Issue Date: April 29, 2008	:	AND
Application No. 10/684,830	:	REQUEST FOR RECONSIDERATION
Filed: October 15, 2003	:	OF PATENT TERM ADJUSTMENT
Attorney Docket No. 08888.0132-02	:	

This is a decision on the 1) Petition under 37 C.F.R. 1.183, requesting that the Office waive the rules and consider on the merits a Request for Reconsideration of Patent Term Adjustment under 37 C.F.R. 1.705(d) filed more than two months from the date the above-referenced patent issued; and on the 2) Request for Reconsideration of Patent Term Adjustment under 37 C.F.R. 1.705(d), all of which were filed on October 24, 2008.

The petition under 37 CFR 1.183 is **dismissed**.

The request for reconsideration of patent term adjustment under 37 CFR 1.705(d) is **dismissed as untimely filed**.

BACKGROUND

On April 29, 2008, the above-identified application matured into U.S. Patent No. 7,364,894, with a revised patent term adjustment

of 316 days. No request for reconsideration of the patent term adjustment indicated in the patent was filed within two months of the date the patent issued. Patentee now petitions under 37 C.F.R. § 1.183 to (i) suspend or waive the requirement of 37 C.F.R. § 1.705(d) that a Request for Reconsideration of Patent Term Adjustment be filed within two months of the date the patent issued; and (ii) consider the enclosed Request for Reconsideration of Patent Term Adjustment. Patentee makes this request, in view of the recent decision in *Wyeth v. Dudas*, No. 07-1492 (D.D.C. Sept. 30, 2008).

ON PETITION UNDER 37 CFR 1.183
TO WAIVE THE TWO-MONTH REQUIREMENT OF 37 CFR 1.705(d)

The above-referenced patent issued on April 29, 2008. A request for reconsideration of the patent term adjustment indicated in the patent was not filed until October 24, 2008. Petitioner requests that the Office waive the rules and consider on the merits the Request for Reconsideration of Patent Term Adjustment under 37 C.F.R. 1.705(d) even though it was untimely filed more than two months from the date the patent issued.

The relevant regulation, 37 CFR 1.705(d), provides that:

> If there is a revision to the patent term adjustment indicated in the notice of allowance, the patent will indicate the revised patent term adjustment. If the patent indicates or should have indicated a revised patent term adjustment, *any request for reconsideration of the patent term adjustment indicated in the patent must be filed within two months of the date the patent issued* and must comply with the requirements of paragraphs (b)(1) and (b)(2) of this section. Any request for reconsideration under this section that raises issues that were raised, or could have been raised, in an application for patent term adjustment under paragraph (b) of this section shall be dismissed as untimely as to those issues. (*emphasis* added).

By the express provisions of 37 CFR 1.705(d), a request for reconsideration of patent term adjustment must be filed within two months of the date the patent issued. It is undisputed that no such request for reconsideration was filed by June 29, 2008, the date two months from the date this patent issued, April 29,

2008. Rather, on October 24, 2008, nearly one month after the issuance of a decision in Wyeth v. Dudas on September 30, 2008, petitioner filed the instant request for waiver of the two-month requirement.

37 CFR 1.183 provides that:

> In an extraordinary situation, when justice requires, any requirement of the regulations in this part which is not a requirement of the statutes may be suspended or waived by the Director or the Director's designee, sua sponte, or on petition of the interested party, subject to such other requirements as may be imposed. Any petition under this section must be accompanied by the petition fee set forth in § 1.17(f).

Preliminarily, it is recognized that the two-month requirement of 37 CFR 1.705(d) is a requirement of the regulations and not a statutory requirement. The statute, 35 U.S.C. 154, requires the Office to provide the applicant one opportunity to request reconsideration of any patent term adjustment determination made by the Director. But, the statute allows the Director to establish the procedures for requesting such reconsideration. Those procedures[1] include pursuant to 37 CFR 1.705(d) setting a two-month period for filing a request for reconsideration of the revised patent term adjustment indicated in the patent. As

---

[1] 35 U.S.C. § 154(b)(3) provides that the USPTO shall: (1) prescribe regulations establishing procedures for the application for and determination of patent term adjustments under 35 U.S.C. § 154(b); (2) make a determination of any patent term adjustment under 35 U.S.C. § 154(b) and transmit a notice of that determination with the notice of allowance under 35 U.S.C. § 151; and (3) provide the applicant one opportunity to request reconsideration of any patent term adjustment determination. Pursuant to the mandate and authority in 35 U.S.C. § 154(b)(3), the USPTO promulgated 37 C.F.R. § 1.705, which provides that: (1) the notice of allowance will include notification of any patent term adjustment under 35 U.S.C. § 154(b)(37 C.F.R. § 1.705(a)); (2) any request for reconsideration of the patent term adjustment indicated in the notice of allowance (except as provided in 37 C.F.R. § 1.705(d)) must be by way of an application for patent term adjustment filed no later than the payment of the issue fee and accompanied by (inter alia) the fee set forth in 37 C.F.R. § 1.18(e)(37 C.F.R. § 1.705(b)); and (3) if the patent indicates or should have indicated a revised patent term adjustment, any request for reconsideration of the patent term adjustment indicated in the patent must be filed within two months of the date the patent issued.

such, it is within the Director's authority to waive the two-month requirement.

Having considered petitioner's arguments, it is concluded that waiver of the two-month requirement is not warranted. The primary basis for requesting waiver set forth by petitioner is the ruling made by the court in Wyeth v. Dudas, No. 07-1492 (D.D.C. Sept. 30, 2008). Specifically, petitioner states that in Wyeth, the U.S. District Court for the District of Columbia held that contrary to USPTO practice, a patentee is entitled to Patent Term Adjustment credit for examination delay under 37 CFR 1.702(b) in addition to any examination delay under 37 CFR 1.702(a), to the extent that the two periods of delay "do not occur on the same calendar day or days." Petitioner argues that they could not have filed a Request for Reconsideration of Patent Term Adjustment within two months of the date the above-referenced patent issued because the basis for the Request for Reconsideration of Patent Term Adjustment is the Wyeth decision, which was entered more than two months after the issuance of their patent.

First, of all, the issuance of the Wyeth Opinion is not an extraordinary situation. Wyeth followed the procedure set forth in 37 CFR 1.705 for requesting reconsideration of the patent term adjustment determination. Then, pursuant to 35 U.S.C. 154(b)(4)(A)[2], Wyeth timely filed a complaint in District Court seeking judicial review of the Office's decision. A Memorandum Opinion and Order, the Wyeth decision of September 30, 2008, directed to the parties involved was issued.

The fact that any relief ultimately granted in Wyeth would benefit patentee had they timely filed a request for reconsideration does not make the situation extraordinary. Petitioner chose not to challenge their revised patent term adjustment within the two-month period. Petitioner's argument that they could not have filed a Request for Reconsideration of

---

[2] 35 U.S.C. 154(b)(4)(A) APPEAL OF PATENT TERM ADJUSTMENT DETERMINATION. — (A) An applicant dissatisfied with a determination made by the Director under paragraph (3) shall have remedy by a civil action against the Director filed in the United States District Court for the District of Columbia within 180 days after the grant of the patent. Chapter 7 of title 5 shall apply to such action. Any final judgment resulting in a change to the period of adjustment of the patent term shall be served on the Director, and the Director shall thereafter alter the term of the patent to reflect such change.

Patent Term Adjustment within two months of the date the above-referenced patent issued because the basis for the Request for Reconsideration of Patent Term Adjustment is the Wyeth decision, which was entered more than two months after the issuance of their patent, is not compelling. Petitioner could have filed a Request for Reconsideration of Patent Term Adjustment as Wyeth did. It is acknowledged that petitioner may have chosen not to file a request for reconsideration based on a conclusion that the Office's interpretation of 35 U.S.C. § 154(b)(2)(A) was correct. Nonetheless, the fact that the District Court has now issued an Opinion contrary to the Office's interpretation does not make the situation extraordinary. This is not unlike any other situation where a patentee (or applicant) challenges a final agency decision and the decision upon judicial review could have had applicability to another patentee (or applicant) had they taken such action. In fact, many patentees may be in the same situation as petitioner with respect to the Wyeth decision.

Petitioner simply fails to articulate how their failure to file a request for reconsideration of patent term adjustment within two months of the issue date of the patent was due to an extraordinary situation. Petitioner cannot rely on Wyeth's actions or the Wyeth decision to establish that their situation was extraordinary.

Moreover, justice does not require waiver of the two-month requirement. Justice requires that the Office continue to devote its resources to the adjudication of timely filed requests for reconsideration under 37 CFR 1.705(b) and (d). Further, upon ultimate resolution of the interpretation of 37 CFR 1.702, justice requires that the Office determine consistent with relevant law and practice, and appropriate Court or legislative guidance, the applicability of any changes as to all affected patentees who failed to timely seek administrative remedy, and thus, could not seek judicial review.

In view thereof, the petition under 37 CFR 1.183 for waiver of the two-month requirement of 37 CFR 1.705(d) is **dismissed**.

Accordingly, consideration now turns to the Request for Reconsideration of Patent Term Adjustment under 37 CFR 1.705(d).

ON REQUEST FOR RECONSIDERATION OF

PATENT TERM ADJUSTMENT UNDER 37 CFR 1.705(d)

This is a decision on the "REQUEST FOR RECONSIDERATION OF PATENT TERM ADJUSTMENT UNDER 37 CFR 1.705(d)," filed October 24, 2008. Therein, patentee requests correction of the patent term adjustment (PTA) indicated in the patent to three hundred sixteen (316) days.

On April 29, 2008, the above-identified application matured into U.S. Patent No. 7,3364,894 with a revised patent term adjustment of 316 days. The instant request for reconsideration was filed almost six months after the issuance of the patent, on October 24, 2008.

No error in the printing of the patent has been shown. The patent term adjustment indicated on the patent reflects the Office's determination of patent term adjustment shown in the PAIR system for this application. 37 CFR 1.705(d) provides the sole avenue before the Office for requesting reconsideration of the Office's determination of patent term adjustment indicated in the patent. Moreover, § 1.705(d) states that "any request for reconsideration of the patent term adjustment indicated in the patent must be filed within two months of the date the patent issued and must comply with the requirements of paragraphs (b)(1) and (b)(2) of this section." Since the request was not filed within two months of the issue date of the patent, the request is properly **dismissed as untimely filed**.

CONCLUSION

It is determined that waiver of the requirement pursuant to 37 CFR 1.183 is not warranted. Accordingly, the request for reconsideration of the patent term adjustment under 37 CFR 1.705(d) filed more than two months after the issue date of the patent is dismissed as untimely filed.

Telephone inquiries specific to this matter should be directed to Charlema Grant, Petitions Attorney, at (571) 272-3215.

Kery A. Fries
Senior Legal Advisor
Office of Patent Legal Administration

DATE 8/27/07

APPLICATION NUMBER 10684839

DOC CODE PetDecPubs

DOC DATE 8/31/07

DELIVER THE ATTACHED FIFLE/DOCUMENT TO THE TC SCANNING CENTER

CONTRACTOR: THE ATTACHED FILE/DOCUMENT MUST BE INDEXED AND SCANNED INTO IFW WITHIN **8** WORK HOURS; UPLOADING OF THE SCANNED IMAGES SHOULD OCCUR NO LATER THAN **16** WORK HOURS FOLLOWING RECEIPT OF THIS REQUEST

AFTER SCANNING, ORIGINAL DOCUMENTS SHOULD BE BOXED IN ACCORDANCE WITH INSTRUCTIONS

UNITED STATES PATENT AND TRADEMARK OFFICE

Commissioner for Patents
United States Patent and Trademark Office
P.O. Box 1450
Alexandria, VA 22313-1450
www.uspto.gov

WOODS FULLER SHULTZ & SMITH P.C.
ATTN: JEFFREY A. PROEHL
P.O. BOX 5027
SIOUX FALLS SD 57117

COPY MAILED

AUG 3 1 2007

OFFICE OF PETITIONS

In re Application of	:	
Anderson, Harlan D.	:	
Application No. 10/684,839	:	ON PETITION
Filed: October 14, 2003	:	
Attorney Docket No. 23-0433	:	

This is a decision on the petition under 37 C.F.R. § 1.137(b), filed July 31, 2007, to revive the above-identified application.

The petition is **GRANTED.**

The petition satisfies the conditions for revival pursuant to the provisions of 37 CFR 1.137(b) in that (1) the reply in the form of payment of the $700.00 issue fee; (2) the petition fee; and (3) the required statement of unintentional delay have been received. Accordingly, the response has been accepted as having been unintentionally delayed.

There is no indication that petitioner has submitted an Issue Fee Transmittal Form (PTOL-85b). Accordingly, if petitioner desires to have the information normally found thereon printed on the patent, the attached blank Issue Fee Transmittal Form should be completed and returned to the Publishing Division within **ONE MONTH** from the mail date of this decision.

The file does not indicate a change of address has been submitted, although the address given on the petition differs from the address of record. If appropriate, a request to change the address of record should be filed. A courtesy copy of this decision is being mailed to the address given on the petition; however, the Office will mail all future correspondence solely to the address of record.

This matter is being referred to the Publishing Division for processing into a patent.

Telephone inquiries regarding this decision should be directed to the undersigned at (571) 272-3206.

Liana Walsh
Petitions Examiner
Office of Petitions

Enclosure: PTOL-85B

Cc: HARLAN D. ANDERSON
25274 465TH AVENUE
HARTFORD, SD 57033

UNITED STATES PATENT AND TRADEMARK OFFICE

COMMISSIONER FOR PATENTS
UNITED STATES PATENT AND TRADEMARK OFFICE
P.O. BOX 1450
ALEXANDRIA, VA 22313-1450
www.uspto.gov

Paper No.

GOODMAN, ALLEN & FILETTI PLLC
4501 HIGHWOODS PARKWAY
SUITE 210
GLEN ALLEN VA 23060

COPY MAILED

MAY 15 2006

OFFICE OF PETITIONS

In re Application of :
Richard Alan McDonald : DECISION ON PETITION
Application No. 10/684,851 :
Filed: October 15, 2003 :
Title: BREAKAWAY SUPPORT FOR :
OVERHEAD LINES :

This is a decision on the "PETITION FOR REVIVAL OF AN APPLICATION FOR PATENT ABANDONED UNAVOIDABLY UNDER 37 CFR 1.137(a)," filed August 29, 2005. Therein, applicant requests, in the alternative, that the application be revived pursuant to § 1.137(b) based on unintentional delay.

The petition under § 1.137(a) is **DISMISSED**.

The petition under § 1.137(b) is **DISMISSED** without consideration on the merits.

Any request for reconsideration of this decision must be submitted within **TWO (2) MONTHS** from the mail date of this decision. The reconsideration request should include a cover letter entitled "Renewed Petition under 37 C.F.R. § 1.137(a)" or "Renewed Petition under 37 C.F.R. § 1.137(b)," as appropriate. Extensions of time are permitted under § 1.136(a).

The above-identified application became abandoned for failure to timely reply to the non-final Office action mailed November 2, 2004. This Office action set a three (3) month shortened statutory period for reply, with extensions of time obtainable under § 1.136(a). A letter was filed in response on January 25,

2005; however, it was deemed not to be a bona fide reply. No extension of time having been obtained and no proper reply filed, the above-identified application became abandoned on February 3, 2005. A Notice of Abandonment was mailed on June 30, 2005.

Applicants timely filed the instant petition. Petitioner maintains that:

Applicant's abandonment was involuntary and unavoidable and would thus fall within the purview of 37 CFR §1.137(a). Applicant filed a timely reply and his actions confirm a bona-fide attempt to comply with the requirements of the USPTO and advance the prosecution of the matter. Applicant's reply was by no means cursory or lacking in detail or specificity. Although Applicant's reply may not have properly addressed the issues the Examiner raised under 35 U.S.C. §103(a) and/or have been in compliance with all formal requirements, applicant filed with a good faith belief that he had complied with all such requirements.

Consideration under § 1.137(a)

A grantable petition under § 1.137(a) must be accompanied by: (1) the reply required to the outstanding Office action or notice, unless previously filed; (2) the petition fee set forth in 37 C.F.R. §1.17(l); (3) a showing to the satisfaction of the Commissioner that the entire delay in filing the required reply from the due date for the reply until the filing of a grantable petition pursuant to this paragraph was unavoidable; and (4) any terminal disclaimer (and fee as set forth in § 1.20(d)) required pursuant to §1.137(d). The instant petition lacks item(3).

Decisions on reviving abandoned applications on the basis of "unavoidable" delay have adopted the reasonably prudent person standard in determining if the delay was unavoidable:

> The word 'unavoidable' ... is applicable to ordinary human affairs, and requires no more or greater care or diligence than is generally used and observed by prudent and careful men in relation to their most important business. It permits them in the exercise of this care to rely upon the ordinary and trustworthy agencies of mail and telegraph, worthy and reliable employees, and such other means and instrumentalities as are usually employed in such important

> business. If unexpectedly, or through the unforeseen fault or imperfection of these agencies and instrumentalities, there occurs a failure, it may properly be said to be unavoidable, all other conditions of promptness in its rectification being present.

In re Mattullath, 38 App. D.C. 497, 514-15 (1912)(quoting Ex parte Pratt, 1887 Dec. Comm'r Pat. 31, 32-33 (1887)); see also Winkler v. Ladd, 221 F. Supp. 550, 552, 138 U.S.P.Q. 666, 167-68 (D.D.C. 1963), aff'd, 143 U.S.P.Q. 172 (D.C. Cir. 1963); Ex parte Henrich, 1913 Dec. Comm'r Pat. 139, 141 (1913). In addition, decisions on revival are made on a "case-by-case basis, taking all the facts and circumstances into account." Smith, 671 F.2d at 538, 213 U.S.P.Q. at 982. Nonetheless, a petition cannot be granted where a petitioner has failed to meet his or her burden of establishing that the delay was "unavoidable." Haines, 673 F. Supp. at 316-17, 5 U.S.P.Q.2d at 1131-32.

Petitioner's arguments have been considered, but have been determined not to meet their burden of showing that the delay was unavoidable within the meaning of §1.137(a). Whether the applicant felt his response was a bona fide attempt to comply with all Office requirements is not controlling. It has been confirmed that the examiner reviewed the response and determined that it was not bona fide within the meaning of § 1.135(c)[1]. The examiner is the appropriate person to make that determination and the standard is not whether applicant believes the response is bona fide, or whether the response is cursory or lacking in detail or specificity. Further, there is no indication in the record that the examiner acted outside of 1.135(c) and petitioner's arguments that the response should have been considered bona fide are not well supported. (e.g., what is applicant's inadvertent omission). In any event, any request for review of the examiner's determination should have been made by petition to the Technology Center, along with a request to withdraw the holding of abandonment. In this instance, review of the determination of the examiner to any further extent on petition to revive is inappropriate.

---

[1] § 1.135(c) When reply by the applicant is a bona fide attempt to advance the application to final action, and is substantially a complete reply to the non-final Office action, but consideration of some matter or compliance with some requirement has been inadvertently omitted, applicant may be given a new time period for reply under § 1.134 to supply the omission.

Moreover, applicant's delay is more appropriately described as a failure to fully understand Office requirements, and thus, to have submitted an improper response. In this regard, it is well established that delay resulting from the lack of knowledge or improper application of the patent statute, rules of practice or the MPEP, however, does not constitute "unavoidable" delay. See Haines, 673 F. Supp. at 317, 5 USPQ2d at 1132; Vincent v. Mossinghoff, 230 USPQ 621, 624 (D.D.C. 1985); Smith v. Diamond, 209 USPQ 1091 (D.D.C. 1981); Potter v. Dann, 201 USPQ 574 (D.D.C. 1978); Ex parte Murray, 1891 Dec. Comm'r Pat. 130, 131 (1891). In addition, a delay caused by an applicant's lack of knowledge or improper application of the patent statute, rules of practice or the MPEP is not rendered "unavoidable" due to: (A) the applicant's reliance upon oral advice from USPTO employees; or (B) the USPTO's failure to advise the applicant of any deficiency in sufficient time to permit the applicant to take corrective action. See In re Sivertz, 227 USPQ 255, 256 (Comm'r Pat. 1985).

In view thereof, it is concluded that petitioner has not made an adequate showing of unavoidable delay, and the petition cannot be granted under § 1.137(a).

Consideration under §1.137(b)

Petitioner requests, in the alternative, consideration under § 1.137(b) on the basis of unintentional delay. However, the petition does not include payment of the petition fee or authorization to charge any required fees to a Deposit Account.

The phrase "[o]n filing" in 35 U.S.C. 41(a)(7) means that the petition fee is required for the filing (and not merely the grant) of a petition under 37 CFR 1.137. See H.R. Rep. No. 542, 97th Cong., 2d Sess. 6 (1982), reprinted in 1982 U.S.C.C.A.N. 770 ("[t]he fees set forth in this section are due on filing the petition"). Therefore, the Office: (A) will not refund the petition fee required by 37 CFR 1.17(l) or 1.17(m), regardless of whether the petition under 37 CFR 1.137 is dismissed or denied; and (B) will not reach the merits of any petition under 37 CFR 1.137 lacking the requisite petition fee.

Accordingly, the petition under § 1.137(b) must be dismissed without consideration on the merits[2].

Receipt of the power of attorney and change of correspondence address filed August 29, 2005 is acknowledged and made of record.

Further correspondence with respect to this decision should be addressed as follows:

By mail:	Mail Stop Petition Commissioner for Patents P.O. Box 1450 Alexandria, VA 22313-1450
By fax:	(571) 273-8300 ATTN: Office of Petitions
By hand:	Customer Service Window Randolph Building 401 Dulany Street Alexandria, VA 22314

Telephone inquiries related to this decision should be directed to the undersigned at (571) 272-3219.

Nancy Johnson
Senior Petitions Attorney
Office of Petitions

[2] To expedite reconsideration, petitioner may call the undersigned at 571-272-3219 to advise her when the fee payment has been made.

UNITED STATES PATENT AND TRADEMARK OFFICE

COMMISSIONER FOR PATENTS
UNITED STATES PATENT AND TRADEMARK OFFICE
P.O. BOX 1450
ALEXANDRIA, VA 22313-1450
www.uspto.gov

Paper No.

GOODMAN, ALLEN & FILETTI PLLC
4501 HIGHWOODS PARKWAY
SUITE 210
GLEN ALLEN VA 23060

COPY MAILED

AUG 14 2006

OFFICE OF PETITIONS

In re Application of :
Richard Alan McDonald : DECISION ON PETITION
Application No. 10/684,851 :
Filed: October 15, 2003 :
Title: BREAKAWAY SUPPORT FOR :
OVERHEAD LINES :

This is a decision on the renewed "PETITION FOR REVIVAL OF AN APPLICATION FOR PATENT ABANDONED UNINTENTIONALLY UNDER 37 CFR 1.137(b)," filed June 26, 2006.

The petition under § 1.137(b) is **GRANTED**.

The above-identified application became abandoned on February 3, 2005 for failure to timely file a proper reply to the non-final Office action mailed November 2, 2004. By decision mailed May 15, 2006, the initial petition filed August 29, 2005 based on unavoidable delay was dismissed. Consideration of the petition in the alternative pursuant to 1.137(b) was not undertaken because the petition did not include the required petition fee.

On instant renewed petition, petitioner paid the petition fee and made the required statement of unintentional delay. The required reply in the form of an amendment was filed on initial petition. No terminal disclaimer is required.

Technology Center AU 3635 has been advised of this decision. The application is, thereby, forwarded to the examiner for consideration of the reply previously submitted on petition filed August 29, 2005.

Telephone inquiries related to this decision should be directed to the undersigned at (571) 272-3219.

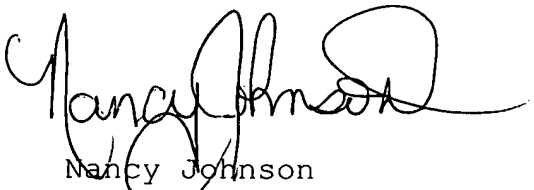

Nancy Johnson
Senior Petitions Attorney
Office of Petitions

UNITED STATES PATENT AND TRADEMARK OFFICE

Commissioner for Patents
United States Patent and Trademark Office
P.O. Box 1450
Alexandria, VA 22313-1450
www.uspto.gov

GOODMAN, ALLEN & FILETTI PLLC
4501 HIGHWOODS PARKWAY
SUITE 210
GLEN ALLEN, VA 23060

COPY MAILED

AUG 3 0 2007

OFFICE OF PETITIONS

In re Application of
Richard Alan McDonald
Application No. 10/684,851
Filed: October 15, 2003
Attorney Docket No.

DECISION ON PETITION
TO WITHDRAW
FROM RECORD

This is a decision on the Request to Withdraw as attorney or agent of record under 37 C.F.R. § 1.36(b) filed April 17, 2007.

The request is **DISMISSED** as moot.

A review of the file record indicates that the power of attorney to Goodman, Allen & Filetti, PLLC has been revoked by the assignee of the patent application on July 6, 2007. Accordingly, the request to withdraw under 37 C.F.R. § 1.36(b) is moot.

All future communications from the Office will continue to be directed to the below-listed address until otherwise notified by applicant.

Telephone inquires concerning this decision should be directed to undersigned at 571-272-1642.

April M. Wise
Petitions Examiner
Office of Petitions

cc: RICHARD MCDONALD
12821 HUNTMASTER LANE
RICHMOND, VA 23233

UNITED STATES PATENT AND TRADEMARK OFFICE

COMMISSIONER FOR PATENTS
UNITED STATES PATENT AND TRADEMARK OFFICE
P.O. BOX 1450
ALEXANDRIA, VA 22313-1450
www.uspto.gov

AT&T CORP.
P.O. BOX 4110
MIDDLETOWN NJ 07748

COPY MAILED

MAR 3 0 2004

OFFICE OF PETITIONS

In re Application of
Kang, et al.
Application No. 10/684,852
Filed: October 14, 2003
Attorney Docket No. 2000-0141Con
For: PSEUDO-CEPSTRAL ADAPTIVE SHORT-TERM POST-FILTERS FOR SPEECH CODERS

DECISION ON PETITION

This is a decision on the petition under 37 CFR 1.53(e), filed February 5, 2004, requesting that Figures 2 and 3 be accorded a filing date of October 14, 2003.

The application was filed on October 14, 2003. On January 20, 2004, the Office of Initial Patent Examination mailed a "Notice of Omitted Item(s) in a Nonprovisional Application" (Notice) informing petitioners that Figures 2 and 3, as described in the specification, appeared to have been omitted.

Petitioners request that Figures 2 and 3 be accorded a filing date of October 14, 2003 on the basis that 9 sheets of formal drawing figures, including Figures 2 and 3, were received in the Patent and Trademark Office (PTO) on October 14, 2003. In support, the instant petition is accompanied by a copy of applicants' itemized postcard receipt showing an Office of Initial Patent Examination generated barcode citing October 14, 2003 as the date of receipt. The postcard lists, *inter alia*, that the filing included 9 sheets of formal drawings.

The return postcard constitutes *prima facie* evidence that 9 sheets of formal drawing figures were filed on October 14, 2003. MPEP 503. A review of the application file reveals that there are 7 sheets of drawing figures present. The missing sheets of drawings correspond to that which would have contained Figures 2 and 3.

Accordingly, the petition under 37 CFR 1.53(e) is **GRANTED**. Pursuant to petitioners' authorization, the petition fee will be credited to deposit account no. 50-2960.

The application is being returned to Office of Initial Patent Examination for further processing, with a filing date of **October 14, 2003**, using the copy of Figures 2 and 3 submitted with the instant petition. Office records will be corrected to show that 9 sheets of drawings were present on initial filing.

Any inquiries pertaining to this matter may be directed to the undersigned at (703) 308-6712.

E. Shirene Willis

E. Shirene Willis
Senior Petitions Attorney
Office of Petitions

UNITED STATES PATENT AND TRADEMARK OFFICE

COMMISSIONER FOR PATENTS
UNITED STATES PATENT AND TRADEMARK OFFICE
P.O. BOX 1450
ALEXANDRIA, VA 22313-1450
www.uspto.gov

MAINE & ASMUS
100 MAIN STREET
P O BOX 3445
NASHUA NH 03061-3445

COPY MAILED

DEC 0 8 2004

OFFICE OF PETITIONS

Applicant: Lutz
Appl. No.: 10/684,853
Filing Date: October 14, 2003
Title: SENSOR WITH SUCTION CUP ARRAY MOUNT
Attorney Docket No.:Si004-US
Pub. No.: US 2004/0075032 A1
Pub. Date: April 22, 2004

This is in response to the request for correction of patent application publication under 37 CFR 1.221(b), which was received on May 27, 2004.

The request is DISMISSED.

The instant request is that the patent application publication be republished because publication contains many typographical errors, as "colorimeter" is misspelled as "calorimeter" throughout the specification and attorney docket number "SI003-US" is misprinted as "S100-US".

37 CFR 1.221(b) is applicable "only when the Office makes a material mistake which is apparent from Office records . . .. This period is not extendable." A material mistake must affect the public's ability to appreciate the technical disclosure of the patent application publication, to determine the scope of the patent application publication, or to determine the scope of the provisional rights that an applicant may seek to enforce upon issuance of a patent.[1]

The typographical errors wherein "colorimeter" is misspelled as "calorimeter" and the typographical error in the attorney docket number are Office errors, but they are minor typographical errors which are understandable from reading the sentence, paragraph and specification in which the terms are used, as terms are not read in a vacuum. While the term "colorimeter" is intermittently misspelled throughout the specification, it is also spelled correctly and the specification discusses the measurement of color, which is clearly a colorimeter. With respect to the typographical error in the attorney docket , it is also a minor typographical error and not a material error under 37 CFR 1.221(b). The mistakes do not affect the public's ability to appreciate the technical disclosure of the patent application publication, or determine the scope of the patent application publication or determine the scope of the provisional rights that an applicant may seek to enforce upon issuance of a patent.

---

[1] Changes to Implement Eighteen-Month Publication of Patent Applications, 65 FR 57023, 57038 (Sept. 20, 2000), 1239 Off. Gaz. Pat. Office Notices 63, 75 (Oct. 10, 2000) (final rule).

The applicant is advised that a "request for republication of an application previously published" may be filed under 37 CFR 1.221(a). Such a request for republication "must include a copy of the application in compliance with the Office's electronic filing system requirements and be accompanied by the publication fee set forth in § 1.18(d) and the processing fee set forth in § 1.17(i)." If the request for republication does not comply with the electronic filing system requirements, the republication will not take place and the publication fee set forth in § 1.18(d) will be refunded. The processing fee will be retained.

Any request for republication under 37 CFR 1.221(a), must be submitted via the EFS system and questions should be addressed as follows:

By mail to: Mail Stop PGPUB
Commissioner for Patents
P.O. Box 1450
Alexandria, VA 22313-1450

By facsimile: 703-872-9306

Inquires concerning this communication should be directed to Mark Polutta at (571) 272-7709.

Mark O. Polutta
Office of Patent Legal Administration
Office of the Deputy Commissioner
for Patent Examination Policy

UNITED STATES PATENT AND TRADEMARK OFFICE

COMMISSIONER FOR PATENTS
UNITED STATES PATENT AND TRADEMARK OFFICE
P.O. BOX 1450
ALEXANDRIA, VA 22313-1450
www.uspto.gov

MAINE & ASMUS
100 MAIN STREET
P O BOX 3445
NASHUA NH 03061-3445

COPY MAILED

DEC 0 8 2004

OFFICE OF PETITIONS

Applicant: Lutz et al.
Appl. No.: 10/684,854
Filing Date: October 14, 2003
Title: COLORIMETER WITH SINGLE CABLE LOW IMPACT MOUNTING SYSTEM
Attorney Docket No.:SI005-US
Pub. No.: US 2004/0080749 A1
Pub. Date: April 29, 2004

This is in response to the request for correction of patent application publication under 37 CFR 1.221(b), which was received on May 28, 2004.

The request is DISMISSED.

The instant request is that the patent application publication be republished because publication contains many typographical errors, as "colorimeter" is misspelled as "calorimeter" throughout the specification.

37 CFR 1.221(b) is applicable "only when the Office makes a material mistake which is apparent from Office records . . .. This period is not extendable." A material mistake must affect the public's ability to appreciate the technical disclosure of the patent application publication, to determine the scope of the patent application publication, or to determine the scope of the provisional rights that an applicant may seek to enforce upon issuance of a patent.[1]

The typographical errors wherein "colorimeter" is misspelled as "calorimeter" throughout the application are Office errors, but they are minor typographical errors which are understandable from reading the sentence, paragraph and specification in which the terms are used, as terms are not read in a vacuum. While the term "colorimeter" is intermittently misspelled throughout the specification, it is also spelled correctly and the specification discusses the measurement of color, which is clearly a colorimeter. The mistakes do not affect the public's ability to appreciate the technical disclosure of the patent application publication, or determine the scope of the patent application publication or determine the scope of the provisional rights that an applicant may seek to enforce upon issuance of a patent.

The applicant is advised that a "request for republication of an application previously published"

---

[1]Changes to Implement Eighteen-Month Publication of Patent Applications, 65 FR 57023, 57038 (Sept. 20, 2000), 1239 Off. Gaz. Pat. Office Notices 63, 75 (Oct. 10, 2000) (final rule).

may be filed under 37 CFR 1.221(a). Such a request for republication "must include a copy of the application in compliance with the Office's electronic filing system requirements and be accompanied by the publication fee set forth in § 1.18(d) and the processing fee set forth in § 1.17(i)." If the request for republication does not comply with the electronic filing system requirements, the republication will not take place and the publication fee set forth in § 1.18(d) will be refunded. The processing fee will be retained.

Any request for republication under 37 CFR 1.221(a), must be submitted via the EFS system and questions should be addressed as follows:

By mail to: Mail Stop PGPUB
Commissioner for Patents
P.O. Box 1450
Alexandria, VA 22313-1450

By facsimile: 703-872-9306

Inquires concerning this communication should be directed to Mark Polutta at (571) 272-7709.

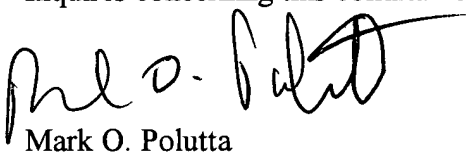

Mark O. Polutta
Office of Patent Legal Administration
Office of the Deputy Commissioner
for Patent Examination Policy

UNITED STATES PATENT AND TRADEMARK OFFICE

Commissioner for Patents
United States Patent and Trademark Office
P.O. Box 1450
Alexandria, VA 22313-1450
www.uspto.gov

COPY MAILED

OCT 25 2006

OFFICE OF PETITIONS

TUNG & ASSOCIATES
838 W. LONG LAKE ROAD
SUITE 120
BLOOMFIELD HILLS MI 48302

In re Application of :
Jia-Ren Chen et al :
Application No. 10/684,855 : ON PETITION
Filed: October 14, 2003 :
Attorney Docket No. 67.200-1120 :

This is a decision on the petition filed May 22, 2006, which is being treated as a petition under 37 CFR 1.314, to defer issuance of the patent.

The petition is GRANTED.

Since the requested deferral period pursuant to MPEP 1306.01 has now passed, the application will be referred to Publishing Division to be processed into a patent.

Petitioner should be aware that a petition to defer under 37 CFR 1.314 is only for one month. If an additional deferral period is required, another petition and fee should be promptly submitted. The petition must include a showing of extraordinary circumstances; MPEP 1306.01.

Telephone inquiries should be directed to the undersigned at (571) 272-3208.

Karen Creasy

Karen Creasy
Petitions Examiner
Office of Petitions

UNITED STATES PATENT AND TRADEMARK OFFICE

UNITED STATES DEPARTMENT OF COMMERCE
United States Patent and Trademark Office
Address: COMMISSIONER FOR PATENTS
P.O. Box 1450
Alexandria, Virginia 22313-1450
www.uspto.gov

BRAKE HUGHES BELLERMANN LLP
c/o CPA Global
P.O. Box 52050
Minneapolis, MN 55402

Mail Date: 04/20/2010

Applicant	: Richard Karl Feldman	: DECISION ON REQUEST FOR
Patent Number	: 7664142	: RECALCULATION of PATENT
Issue Date	: 02/16/2010	: TERM ADJUSTMENT IN VIEW
Appliction No	: 10/684,873	: OF WYETH AND NOTICE OF INTENT TO
Filed	: 10/15/2003	: ISSUE CERTIFICATE OF CORRECTION
		:

The Request for Recalculation is **GRANTED** to the extent indicated.

The patent term adjustment has been determined to be **1225** days. The USPTO will *sua sponte* issue a certificate of correction reflecting the amount of PTA days determined by the recalculation.

Prior to the issuance of the certificate of correction, the USPTO will afford patentee an opportunity to be heard and request reconsideration. Accordingly, patentee has **one month or thirty (30) days**, whichever is longer, to file a request for reconsideration of this patent term adjustment calculation. See 35 U.S.C. 154(b)(3)(B)(ii) and 37 CFR 1.322(a)(4). No extensions of time will be granted under 37 CFR 1.136.

Patentee should use document code PET.OP if electronically filing a request for reconsideration of this patent term adjustment calculation. The patentee must also include the information required by 37 CFR 1.705(b)(2) and the fee required by 37 CFR 1.18(e). If patentee does not file a timely request for reconsideration of this patent term adjustment calculation including the information required by 37 CFR 1.705(b)(2) and the fee required by 37 CFR 1.18(e), the USPTO will issue a certificate of correction reflecting the PTA determination noted above.

Patentee should be aware that in order to preserve the right to review in the United States District Court for the District of Columbia of the USPTO patent term adjustment determination, patentee must ensure that he or she also take the steps required under 35 U.S.C. 154(b)(4)(A) in a timely manner. Nothing in the request for recalculation should be construed as providing an alternative time frame for commencing a civil action under 35 U.S.C. 154(b)(4)(A).

Any questions concerning this decision should be directed to the Office of Patent Legal Administration at 571-272-7702.

UNITED STATES PATENT AND TRADEMARK OFFICE

COMMISSIONER FOR PATENTS
UNITED STATES PATENT AND TRADEMARK OFFICE
P.O. BOX 1450
ALEXANDRIA, VA 22313-1450
WWW.USPTO.GOV

Paper No. None

DUNLAP, CODDING & ROGERS P.C.
PO BOX 16370
OKLAHOMA CITY OK 73113

COPY MAILED
JUN 19 2006
OFFICE OF PETITIONS

In re Application of :
Brent E. Little :
Application No. 10/684,899 : DECISION ON PETITION
Filed: October 9, 2003 : UNDER 37 C.F.R. §1.137(b)
Attorney Docket Number: LO-22 :
Title: INTEGRATED OPTICAL MODE :
SHAPE TRANSFORMER AND METHOD OF :
FABRICATION :

This is a decision on the petition, pursuant to 37 C.F.R. §1.137(b)[1], to revive the above-identified application, filed on February 27, 2006.

The above-identified application became abandoned for failure to submit the issue fee in a timely manner in reply to the Notice of Allowance and Issue Fee Due, mailed November 15, 2005, which set a shortened statutory period for reply of three (3) months. No extensions of time are permitted for transmitting issue fees[2].

---

1 A grantable petition pursuant to 37 C.F.R. §1.137(b) must be accompanied by:

(1) The reply required to the outstanding Office action or notice, unless previously filed;
(2) The petition fee as set forth in § 1.17(m);
(3) A statement that the entire delay in filing the required reply from the due date for the reply until the filing of a grantable petition pursuant to this paragraph was unintentional. The Commissioner may require additional information where there is a question whether the delay was unintentional, and;
(4) Any terminal disclaimer (and fee as set forth in § 1.20(d)) required pursuant to paragraph (d) of this section.

2 See MPEP §710.02(e).

Accordingly, the above-identified application became abandoned on February 16, 2005.

With the present petition, Petitioner has submitted the petition fee, the issue fee, and the proper statement of unintentional delay.

As such, the petition is **GRANTED**.

After the mailing of this decision, the Office of Patent Publications will be notified of the same so that the present application can be processed into a patent.

The phone number for the Office of Patent Publication is (571) 272-4200. Telephone inquiries regarding this decision should be directed to the undersigned at (571) 272-3225.

Paul Shanoski
Senior Attorney
Office of Petitions
United States Patent and Trademark Office

UNITED STATES PATENT AND TRADEMARK OFFICE

Commissioner for Patents
United States Patent and Trademark Office
P.O. Box 1450
Alexandria, VA 22313-1450
www.uspto.gov

MERCHANT & GOULD (MICROSOFT)
P.O. BOX 2903
MINNEAPOLIS MN 55402-0903

COPY MAILED

MAR 16 2007

OFFICE OF PETITIONS

In re Application of :
Norbert P. Kusters et al. :
Application No. 10/684,900 : ON PETITION
Filed: October 14, 2003 :
Attorney Docket No.:
14917.0231USU1/MS301905.0

This is a decision on the petition filed February 22, 2007 under 37 CFR 1.137(b), [1] to revive the above-identified application.

The petition is **GRANTED**.

This application became abandoned for failure to timely reply to the non-Final Office Action mailed June 23, 2006. A shortened statutory period of three months was set for replying to the non-Final Office Action. No extensions of time having been requested prior to abandonment, this application became abandoned September 25, 2006. Accordingly, a Notice of Abandonment was mailed January 5, 2007.

A review of the record reveals that a three month extension of time was filed with the instant petition, however, pursuant to 37 CFR 1.136, an extension of time must be filed prior to the expiration of the maximum period obtainable for reply to avoid abandonment.

---

[1] Effective December 1, 1997, the provisions of 37 CFR 1.137(b) now provide that where the delay in reply was unintentional, a petition may be filed to revive an abandoned application or a lapsed patent pursuant to 37 CFR 1.137(b). A grantable petition filed under the provisions of 37 CFR 1.137(b) must be accompanied by:

(1) the required reply, unless previously filed. In a nonprovisional application abandoned for failure to prosecute, the required reply may be met by the filing of a continuing application. In a nonprovisional application filed on or after June 8, 1995, and abandoned for failure to prosecute, the required reply may also be met by the filing of a request for continued examination in compliance with § 1.114. In an application or patent, abandoned or lapsed for failure to pay the issue fee or any portion thereof, the required reply must be the payment of the issue fee or any outstanding balance thereof. In an application abandoned for failure to pay the publication fee, the required reply must include payment of the publication fee.

(2) the petition fee as set forth in 37 CFR 1.17(m);

(3) a statement that the entire delay in filing the required reply from the due date for the reply until the filing of a grantable petition pursuant to 37 CFR 1.137(b) was unintentional. The Commissioner may required additional information where there is a question whether the delay was unintentional; and

(4) any terminal disclaimer (and fee as set forth in 37 CFR 1.20(d)) required pursuant to 37 CFR 1.137(c)).

Accordingly, since the $1020.00 extension of time fee submitted with the petition on February 22, 2007, was subsequent to the maximum period obtainable for reply, this fee is unnecessary and will be credited to counsel's deposit account no. 13-2725.

This matter is being referred to Technology Center 2165 for appropriate action on the amendment filed February 22, 2007.

Telephone inquiries concerning this matter should be directed to the undersigned Petitions Attorney at (571) 272-3212.

Patricia Faison-Ball

Patricia Faison-Ball
Senior Petitions Attorney
Office of Petitions

UNITED STATES PATENT AND TRADEMARK OFFICE

Commissioner for Patents
United States Patent and Trademark Office
P.O. Box 1450
Alexandria, VA 22313-1450
www.uspto.gov

MAILED
FROM DIRECTORS OFFICE

SEP 13 2005

TECHNOLOGY CENTER 3600

James A. Witherspoon
WOMBLE CARLYLE SANDRIDGE & RICE
P.O. Box 7037
Atlanta, GA 30357-0037

In re Application of :
Uwe Assmann et al. :
Application No. 10/684,901 :
Filed: October 14, 2003 :

DECISION ON PETITION TO WITHDRAW ABANDONMENT

For: FITTING FOR A VEHICLE SEAT

This is a decision on applicant's Petition to Withdraw the Holding of Abandonment under 37 CFR 1.181 filed in the United States Patent and Trademark Office on February 11, 2005.

The petition is **DISMISSED**.

A review of the file record indicates that the application was held abandoned for failure to timely file a response to the Office action mailed June 15, 2004 which set a one month shortened statutory period. No response was received and a Notice of Abandonment was sent on January 25, 2005.

Petitioner contends that a response was filed on July 7, 2004 In support thereof, petitioner submits, a copy of a response bearing a Certificate of Mailing signed by Joyce D. Smith and dated July 7, 2004.

Petitioner's evidence of a timely filing based on a Certificate of Mailing is considered to be insufficient. In this regard, any petition to withdraw the holding of abandonment based upon a Certificate of Mailing must include the following requirements:

(1) A copy of the original response bearing a signed Certificate of Transmission which includes the date of signing; and

(2) A statement under 37 CFR 1.8(b)(3) attesting to the personal knowledge of transmitting the original response on the date

indicated on the Certificate of Transmission (see 37 CFR 1.8 and MPEP 512), by the person who signed the certificate.

While meeting requirement (1) above the petition fails, under requirement (2), to also include a statement under 37 CFR 1.8(b)(3) attesting to the personal knowledge of sending the original response by facsimile transmission on the date indicated on the certificate, by the person who signed the certificate, in this instance Joyce D. Smith. The statement made by James A. Witherspoon attesting to the timely mailing has been noted, however, absent any extenuating circumstances, this statement must be made by the person who signed the certificate.

Any request for reconsideration of this decision must be submitted within TWO (2) MONTHS from the mail date of this decision. Extensions of time under 37 CFR 1.136(b) are permitted. The reconsideration request should include a cover letter entitled "Renewed Petition to Withdraw the Holding of Abandonment Under 37 CFR 1.81."

Kenneth J. Dorner
Special Programs Examiner
Patent Technology Center 3600
(571) 272-6587

KJD/js: 7/26/05

UNITED STATES PATENT AND TRADEMARK OFFICE

Commissioner for Patents
United States Patent and Trademark Office
P.O. Box 1450
Alexandria, VA 22313-1450
www.uspto.gov

James A. Witherspoon
Womble, Carlyle, Sandridge & Rice
PO Box 7037
Atlanta, GA 30357-0037

COPY MAILED

FEB 0 6 2006

OFFICE OF PETITIONS

ON PETITION

In re Application of :
Assmann et al. :
Application No. 10/684,901 :
Filed: October 14, 2003 :
Attorney Docket No. H169 1590.1 :

This is a decision on the renewed petition under 37 CFR 1.181, filed October 13, 2005, to withdraw the holding of abandonment.

The petition is **granted.**

The above-identified application was deemed abandoned for failure to reply in a timely manner to the non-final Office action mailed June 15, 2004, which set a shortened statutory period for reply of one (1) month or thirty (30) days (whichever is later). No extensions of time under the provisions of 37 CFR 1.136(a) were obtained. Accordingly, the above-identified application was deemed to be abandoned as of July 16, 2004. A Notice of Abandonment was mailed on January 25, 2005.

Petitioner contends a reply was timely filed. Petitioner has provided a showing in compliance with 37 CFR 1.18(b).

The Notice of Abandonment is hereby vacated and the holding of abandonment withdrawn.

Technology Center Art Unit 3636 will be informed of the instant decision so that the examiner can consider the "Response to Restriction Requirement" in due course.

Telephone inquiries should be directed to Petitions Attorney Steven Brantley at (571) 272-3203.

Charles Steven Brantley
Petitions Attorney
Office of Petitions

UNITED STATES PATENT AND TRADEMARK OFFICE

Commissioner for Patents
United States Patent and Trademark Office
P.O. Box 1450
Alexandria, VA 22313-1450
www.uspto.gov

Paper No.

Hughes Electronics Corporation
Patent Docket Administration
RE/R11/Mail Stop A109
P.O. Box 956
El Segundo, CA 90245-0956

COPY MAILED

MAY 0 4 2004

OFFICE OF PETITIONS

In re Application of :
Robert Torres, Thomas Fletcher, :
Robert Aryee and Mangala Kannan : DECISION ACCORDING STATUS
Application No. 10/684,914 : UNDER 37 CFR 1.47(a)
Filed: October 14, 2003 :
Attorney Docket No. PD-202132 :
Title: METHOD AND SYSTEM FOR :
MULTICAST IN A BROADBAND SATELLITE :
SYSTEM :

This is a decision on the "PETITION UNDER 37 CFR § 1.47(a)," filed March 17, 2004 (certificate of mailing March 16, 2004).

The petition is **GRANTED**.

The above-identified application was filed on October 14, 2003, without an unexecuted declaration. Robert Torres, Thomas Fletcher, Robert Aryee and Mangala Kannan were named as joint inventors. Accordingly, on January 16, 2004, a "Notice to File Missing Parts of Nonprovisional Application" was mailed, requiring an executed oath or declaration and a surcharge for its late filing.

In response, rule 47 applicants timely filed the instant petition (and fee); the late surcharge; and a declaration executed by inventors Torres, Aryee and Kannan on behalf of themselves and on behalf of non-signing joint inventor Fletcher. Rule 47 applicants maintain that status under 37 CFR 1.47 is proper because joint inventor Fletcher has by his conduct in not responding refused to join in the application for patent.

By declaration of facts of Craig Plastrik, with supporting documentary evidence, petitioner has shown that the application papers were presented to inventor Fletcher. However, by his conduct in not responding to the presentation of the application papers and request to sign the declaration, inventor Fletcher has refused to join in the application. The petition includes the last known address of inventor Fletcher.

The declaration filed March 17, 2004, and the petition have been reviewed and found in compliance with 37 CFR 1.47(a).

This application is hereby accorded Rule 1.47(a) status.

BEST AVAILABLE COPY

As provided in new Rule 1.47(c), this Office will forward notice of this application's filing to the non-signing inventor at the address given in the petition. Notice of the filing of this application will also be published in the Official Gazette.

The application will be examined in Technology Center 2681 in due course.

Telephone inquiries regarding this decision should be directed to the undersigned at (703) 305-0309.

Nancy Johnson
Senior Petitions Attorney
Office of Petitions

BEST AVAILABLE COPY

UNITED STATES PATENT AND TRADEMARK OFFICE

Commissioner for Patents
United States Patent and Trademark Office
P.O. Box 1450
Alexandria, VA 22313-1450
www.uspto.gov

MAILED

APR 29 2010

OFFICE OF PETITIONS

MOTOROLA INC.
600 NORTH US HIGHWAY 45
W4-39Q
LIBERTYVILLE IL 60048-5343

In re Application of	:	
Hao BI, et al	:	
Application No. 10/684,918	:	DECISION ON PETITION
Filed: October 14, 2003	:	
Attorney Docket No. CS23795RA	:	

This is a decision on the petition under the unintentional provisions of 37 CFR 1.137(b), filed January 22, 2010, to revive the above-identified application.

The petition is **GRANTED**.

The application became abandoned for failure to reply in a timely manner to the non-final Office action mailed, June 5, 2009, which set a shortened statutory period for reply of three (3) months. No extensions of time under the provisions of 37 CFR 1.136(a) were obtained. Accordingly, the application became abandoned on September 6, 2009.

The petition satisfies the requirements of 37 CFR 1.137(b) in that petitioner has supplied (1) the reply in the form of an amendment, (2) the petition fee of $1620; and (3) the required statement of unintentional delay.

The Office acknowledges the submission of the RCE and a Terminal Disclaimer, filed with the petition dated January 22, 2010.

Telephone inquiries concerning this decision should be directed to the undersigned at (571) 272-6735.

This application is being referred to Technology Center AU 2618 for appropriate action by the Examiner in the normal course of business on the reply received January 22, 2010.

/dcg/
Diane C. Goodwyn
Petitions Examiner
Office of Petitions

UNITED STATES PATENT AND TRADEMARK OFFICE

Commissioner for Patents
United States Patent and Trademark Office
P.O. Box 1450
Alexandria, VA 22313-1450
www.uspto.gov

C. ROBERT VON HELLENS
CAHILL, VON HELLENS & GLAZER P.L.C.
155 PARK ONE,
2141 E. HIGHLAND AVENUE
PHOENIX AZ 85016

COPY MAILED

MAY 07 2007

OFFICE OF PETITIONS

In re Application of :
Samuel R. REGINA :
Application No. 10/684,921 : ON PETITION
Filed: October 14, 2003 :
Attorney Docket No. 5923-A-3 (CIP A-2) :

This is in response to the petition filed August 1, 2006 under 37 CFR 1.181 to invoke supervisory review which is being treated as a petition under 37 CFR 1.183 to suspend the requirements of 37 CFR 312.

The petition under 37 CFR 1.183 is **GRANTED.**

Under the extraordinary circumstances of this application, as set forth in the instant petition, justice would be served by suspending the requirements of 37 CFR 312.

Under the circumstances of this case, and in view of the petition-requesting waiver of the rules granted by this decision, the application will be forwarded to Technology Center Art Unit 3635 for appropriate action on the amendment filed concurrently with the instant petition.

As the instant petition is being treated as a petition under 37 CFR 1.183, the petition fee of $400 set forth in 37 CFR 1.17(f) is required. Petitioner has already paid $130 for consideration of the instant petition. Accordingly, an additional $270 will be charged to petitioners Deposit Account No. 03-0088.

Telephone inquiries regarding this decision should be directed to David Bucci at (571) 272-7099. All other inquiries concerning either the examination procedures or status of the application should be directed to the Technology Center.

Brian Hearn
Petitions Examiner
Office of Petitions

SPE RESPONSE FOR CERTIFICATE OF CORRECTION

Paper No.: _____

DATE : 4-28-08

TO SPE OF : ART UNIT 3636

SUBJECT : Request for Certificate of Correction for Appl. No.: 10/684933 Patent No.: 7134726

Please respond to this request for a certificate of correction within 7 days.

Please review the requested changes/corrections as shown in the **COCIN** document(s) in the IFW application image. No new matter should be introduced, nor should the scope or meaning of the claims be changed.

Please check C of C

Please complete the response (see below) and forward the completed response to scanning using document code **COCX**.

Certificates of Correction Branch

703-308-9390 ext. 117

Thank You For Your Assistance

The request for issuing the above-identified correction(s) is hereby:

Note your decision on the appropriate box.

- [X] Approved — All changes apply.
- [ ] Approved in Part — Specify below which changes do not apply.
- [ ] Denied — State the reasons for denial below.

Comments: _____

DAVID DUNN
SUPERVISORY PATENT EXAMINER

SPE

3636
Art Unit

UNITED STATES PATENT AND TRADEMARK OFFICE

Commissioner for Patents
United States Patent and Trademark Office
P.O. Box 1450
Alexandria, VA 22313-1450
www.uspto.gov

BRINKS HOFER GILSON & LIONE/UTAH
UTAH OFFICE
405 SOUTH MAIN STREET
SUITE 800
SALT LAKE CITY UT 84111-3400

COPY MAILED

SEP 1 9 2008

OFFICE OF PETITIONS

In re Patent No. 7,335,743	:	
Application No. 10/684,957	:	
Filed: October 14, 2003	:	ON PETITION
Issued: February 26, 2008	:	
Attorney Docket No. 49494-22 (A-88-US-NP)	:	

This is a decision on the petition filed May 14, 2008, which is being treated as a request under 37 CFR 3.81(b)[1] to add the name of the second assignee on the front page of the above-identified patent by way of a Certificate of Correction.

The request is **GRANTED.**

The patent file is being forwarded to the Certificates of Correction Branch for issuance of the requested Certificate of Correction.

Telephone inquiries concerning this decision may be directed to the undersigned at (571) 272-3206. Inquiries regarding the issuance of a certificate of correction should be directed to the Certificate of Correction Branch at (571) 272-4200.

Liana Walsh
Petitions Examiner
Office of Petitions

[1] *See* MPEP 1309, subsection II; and Official Gazette of June 22, 2004.

UNITED STATES PATENT AND TRADEMARK OFFICE

Commissioner for Patents
United States Patent and Trademark Office
P.O. Box 1450
Alexandria, VA 22313-1450
www.uspto.gov

D. N. HALGREN
35 CENTRAL ST
MANCHESTER MA 01944

COPY MAILED
SEP 15 2008

In re Application of :
Patrick V. Marasco, Jr. :
Application No. 10/684,960 : DECISION ON PETITION
Filed: October 14, 2003 :
Attorney Docket No. **Marasco-5** :

This is a decision on the petition under the unintentional provisions of 37 CFR 1.137(b), filed April 16, 2008, to revive the above-identified application.

The petition is **DISMISSED**.

Any request for reconsideration of this decision must be submitted within TWO (2) MONTHS from the mail date of this decision. Extensions of time under 37 CFR 1.136(a) are permitted. The reconsideration request should include a cover letter entitled "Renewed Petition under 37 CFR 1.137(b)." This is **not** a final agency action within the meaning of 5 U.S.C. § 704.

The application became abandoned for failure to reply in a timely manner to the non-final Office action mailed, October 19, 2005 which set a shortened statutory period for reply of three (3) months. No extensions of time under the provisions of 37 CFR 1.136(a) were obtained. Accordingly, the application became abandoned on January 20, 2006.

A grantable petition under 37 CFR 1.137(b) must be accompanied by: (1) the required reply, unless previously filed; (2) the petition fee as set forth in 37 CFR 1.17(m); (3) a statement that the entire delay in filing the required reply from the due date for the reply until the filing of a grantable petition pursuant to 37 CFR 1.137(b) was unintentional; and (4) any terminal disclaimer (and fee as set forth in 37 CFR 1.20(d)) required by 37 CFR 1.137(d). Where there is a question as to whether either the abandonment or the delay in filing a petition under 37 CFR 1.137 was unintentional, the Director may require additional information. *See* MPEP 711.03(c)(II)(C) and (D). The instant petition lacks item (3).

There are three periods to be considered during the evaluation of a petition under 37 CFR 1.137(b):

(1) the delay in reply that originally resulted in the abandonment;

(2) the delay in filing an initial petition pursuant to 37 CFR 1.137(b) to revive the application; and

(3) the delay in filing a grantable petition pursuant to 37 CFR 1.137(b) to revive the application.

Currently, the delay has not been shown to the satisfaction of the Director to be unintentional for periods (1) and (2).

As to Period (1):

The patent statute at 35 U.S.C. § 41(a)(7) authorizes the Director to revive an "unintentionally abandoned application." The legislative history of Public Law 97-247 reveals that the purpose of 35 U.S.C. § 41(a)(7) is to permit the Office to have more discretion than in 35 U.S.C. §§ 133 or 151 to revive abandoned applications in appropriate circumstances, but places a limit on this discretion, stating that "[u]nder this section a petition accompanied by either a fee of $500 or a fee of $50 **would not be granted where the abandonment** or the failure to pay the fee for issuing the patent **was intentional** as opposed to being unintentional or unavoidable." [emphasis added]. See H.R. Rep. No. 542, 97th Cong., 2d Sess. 6-7 (1982), *reprinted in* 1982 U.S.C.C.A.N. 770-71. The revival of an intentionally abandoned application is antithetical to the meaning and intent of the statute and regulation.

35 U.S.C. § 41(a)(7) authorizes the Director to accept a petition "for the revival of an unintentionally abandoned application for a patent." As amended December 1, 1997, 37 CFR 1.137(b)(3) provides that a petition under 37 CFR 1.137(b) must be accompanied by a statement that the delay was unintentional, but provides that "[t]he Commissioner may require additional information where there is a question whether the delay was unintentional." Where, as here, there is a question whether the initial delay was unintentional, the petitioner must meet the burden of establishing that the delay was unintentional within the meaning of 35 U.S.C. § 41(a)(7) and 37 CFR 1.137(b). *See* In re Application of G, 11 USPQ2d 1378, 1380 (Comm'r Pats. 1989); 37 CFR 1.137(b). Here, in view of the inordinate delay (almost two (2)and one-half years) in resuming prosecution, there is a question whether the entire delay was unintentional. Petitioner should note that the issue is not whether some of the delay was unintentional by any party; rather, the issue is whether the entire delay has been shown to the satisfaction of the Director to be unintentional.

The question under 37 CFR 1.137(b) for period (1) is whether the delay on the part of the party having the right or authority to reply to avoid abandonment (or not reply) was unintentional. Accordingly, any renewed petition must clearly identify the party having the right to reply to avoid abandonment on January 20, 2006. That party, in turn must explain what effort(s) was made to further reply to the outstanding Office action and further, why no reply was filed. If no effort was made to further reply, then that party must explain why the delay in this application does not result from a deliberate course of action (or inaction). As Donald Halgren was the party having the right to reply at the date of abandonment, Halgren should explain why this application became abandoned while it was under his control and what efforts Halgren made to further reply and with whom this matter was discussed. When did Halgren and Patrick V. Marasco, Jr. become aware of the abandonment of this application? Additionally, Halgren and Marasco must explain the circumstances surrounding the discovery of the abandonment of this application almost two (2) and one-half years after the mailing of the Notice of Abandonment.

Copies of any correspondence relating to the filing, or to not filing a further reply to the outstanding Office action are required from responsible person(s), Patrick V. Marasco and whoever else was involved with this application at the time of abandonment. Statements are required from the responsible person(s) having firsthand knowledge of the circumstances surrounding the lack of a reply to the outstanding Office action. As the courts have made clear, it is pointless for the USPTO to revive a long abandoned

application without an adequate showing that the delay did not result from a deliberate course of action. See Lawman Armor v. Simon, 2005 U.S. Dist. LEXIS 10843, 74 USPQ2d 1633 (DC EMich 2005); Field Hybrids, LLC v. Toyota Motor Corp., 2005 U.S. Dist. LEXIS 1159 (D. Minn Jan. 27, 2005); Lumenyte Int'l Corp. v. Cable Lite Corp., Nos. 96-1011, 96-1077, 1996 U.S. App. LEXIS 16400, 1996 WL 383927 (Fed. Cir. July 9, 1996) (unpublished) (patents held unenforceable due to a finding of inequitable conduct in submitting an inappropriate statement that the abandonment was unintentional).

As to Period (2):

Likewise, where the applicant deliberately chooses not to seek or persist in seeking the revival of an abandoned application, or where the applicant deliberately chooses to delay seeking the revival of an abandoned application, the resulting delay in seeking revival of the abandoned application cannot be considered as "unintentional" within the meaning of 37 CFR 1.137(b). *See* MPEP 711.03(c).

The language of both 35 U.S.C. § 41(a)(7) and 37 CFR 1.137(b) are clear and unambiguous, and, furthermore, without qualification. That is, the delay in filing the reply during prosecution, as well as in filing the petition seeking revival, must have been, without qualification, "unintentional" for the reply to now be accepted on petition. The Office requires that the entire delay be at least unintentional as a prerequisite to revival of an abandoned application to prevent abuse and injury to the public. *See* H.R. Rep. No. 542, 97th Cong., 2d Sess. 7 (1982), reprinted i1982 U.S.C.C.A.N. 771 ("[i]n order to prevent abuse and injury to the public the Commissioner could require applicants to act promptly after becoming aware of the abandonment"). The December 1997 change to 37 CFR 1.137 did not create any new right to overcome an intentional delay in seeking revival, or in renewing an attempt at seeking revival, of an abandoned application. *See* Changes to Patent Practice and Procedure; Final Rule Notice, 62 Fed. Reg. 53131, 53160 (October 10, 1997), 1203 Off. Gaz. Pat. Office 63, 87 (October 21, 1997), which clearly stated that any protracted delay (here, three (3) years) could trigger, as here, a request for additional information. As the courts have since made clear, a protracted delay in seeking revival, as here, requires a petitioner's detailed explanation seeking to excuse the delay as opposed to USPTO acceptance of a general allegation of unintentional delay. *See* Lawman Armor v. Simon, 2005 U.S. Dist. LEXIS 10843, 74 USPQ2d 1633, at 1637-8 (DC EMich 2005); Field Hybrids, LLC v. Toyota Motor Corp., 2005 U.S. Dist. LEXIS 1159 (D. Minn Jan. 27, 2005) at *21-*23. Statements are required from any and all persons and the responsible person(s) having firsthand knowledge of the circumstances surrounding the protracted delay, after the abandonment date, in seeking revival.

As noted in MPEP 711.03(c)(II), subsection D, in instances in which such petition was not filed within 1 year of the date of abandonment of the application, applicants should include:

> (A) the date that the applicant first became aware of the abandonment of the application; and
>
> (B) a showing as to how the delay in discovering the abandoned status of the application occurred despite the exercise of due care or diligence on the part of the applicant.

In either instance, applicant's failure to carry the burden of proof to establish that the "entire" delay was "unavoidable" or "unintentional" may lead to the denial of a petition under 37 CFR 1.137(b), regardless of the circumstances that originally resulted in the abandonment of the application. *See also* New York

University v. Autodesk, 2007 U.S. DIST LEXIS, U.S.District LEXIS 50832, *10 -*12 (S.D.N.Y. 2007)(protracted delay in seeking revival undercuts assertion of unintentional delay).

Any renewed petition may be addressed as follows:

By Mail:
Mail Stop PETITION
Commissioner for Patents
P. O. Box 1450
Alexandria, VA 22313-1450

By hand:
U. S. Patent and Trademark Office
Customer Service Window, Mail Stop Petitions
Randolph Building
401 Dulany Street
Alexandria, VA 22314

The centralized facsimile number is **(571) 273-8300.**

Correspondence regarding this decision may also be filed through the electronic filing system of the USPTO.

Telephone inquiries concerning this decision should be directed to undersigned at (571) 272-4231.

Michelle R. Eason
Paralegal Specialist
Office of Petitions

UNITED STATES PATENT AND TRADEMARK OFFICE

Commissioner for Patents
United States Patent and Trademark Office
P.O. Box 1450
Alexandria, VA 22313-1450
www.uspto.gov

KRISTOFER E. ELBING
187 PELHAM ISLAND ROAD
WAYLAND, MA 01778

COPY MAILED

MAR 0 6 2008

OFFICE OF PETITIONS

In re Application of :
E. Neil Lewis et al. :
Application No. 10/684,965 : DECISION ON PETITION
Filed: October 14, 2003 :
Attorney Docket No. S0001-0211002 :

This is a decision on the petition under the unintentional provisions of 37 CFR 1.137(b), filed September 25, 2007, to revive the above-identified application.

The petition is **GRANTED**.

The application became abandoned for failure to reply in a timely manner to the non-final Office action mailed February 21, 2007, which set a shortened statutory period for reply of three (3) months. No extensions of time under the provisions of 37 CFR 1.136(a) were obtained. Accordingly, the application became abandoned on May 22, 2007. A Notice of Abandonment was mailed on September 21, 2007.

The petition satisfies the requirements of 37 CFR 1.137(b) in that petitioner has supplied (1) the reply in the form of an amendment after non-final, (2) the petition fee of $750.00, and (3) a proper statement of unintentional delay.

Telephone inquiries concerning this decision should be directed to Kimberly Inabinet at (571) 272-4618.

This application is being referred to Technology Center AU 2884 for appropriate action by the Examiner in the normal course of business on the reply received September 25, 2007.

Andrea Smith
Petitions Examiner
Office of Petitions

UNITED STATES PATENT AND TRADEMARK OFFICE

Commissioner for Patents
United States Patent and Trademark Office
P. O. Box 1450
Alexandria, VA 22313-1450
www.uspto.gov

INDIANAPOLIS OFFICE 27879
BRINKS HOFER GILSON & LIONE
CAPITAL CENTER, SUITE 1100
201 NORTH ILLINOIS STREET
INDIANAPOLIS, IN 46204-4220

MAILED

JUL 13 2009

OFFICE OF PETITIONS

In re Application of :
Dai Kamiya et al :
Application No. 10/684,968 : ON PETITION
Filed: October 14, 2003 :
Attorney Docket No. 9683/160

This is a decision on the petition, filed July 10, 2009 under 37 CFR 1.313(c)(2) to withdraw the above-identified application from issue after payment of the issue fee.

The petition is **GRANTED**.

The above-identified application is withdrawn from issue for consideration of a submission under 37 CFR 1.114 (request for continued examination). See 37 CFR 1.313(c)(2).

Petitioner is advised that the issue fee paid on June 24, 2009 in the above-identified application cannot be refunded. If, however, the above-identified application is again allowed, petitioner may request that it be applied towards the issue fee required by the new Notice of Allowance.[1]

Telephone inquiries should be directed to Irvin Dingle at (571) 272-3210.

This matter is being referred to Technology Center AU 2432 for processing of the request for continued examination under 37 CFR 1.114 and for consideration of the concurrently filed amendment.

/Irvin Dingle/
Irvin Dingle
Petitions Examiner
Office of Petitions

[1] The request to apply the issue fee to the new Notice may be satisfied by completing and returning the new Issue Fee Transmittal Form PTOL-85(b), which includes the following language thereon: Commissioner for Patents is requested to apply the Issue Fee and Publication Fee (if any) or re-apply any previously paid issue fee to the application identified above. Petitioner is advised that, whether a fee is indicated as being due or not, the Issue Fee Transmittal Form **must** be completed and timely submitted to avoid abandonment. Note the language in bold text on the first page of the Notice of Allowance and Fee(s) Due (PTOL-85).

UNITED STATES PATENT AND TRADEMARK OFFICE

UNITED STATES DEPARTMENT OF COMMERCE
United States Patent and Trademark Office
Address: COMMISSIONER FOR PATENTS
P.O. Box 1450
Alexandria, Virginia 22313-1450
www.uspto.gov

INDIANAPOLIS OFFICE 27879
BRINKS HOFER GILSON & LIONE
CAPITAL CENTER, SUITE 1100
201 NORTH ILLINOIS STREET
INDIANAPOLIS, IN 46204-4220

Mail Date: 04/21/2010

Applicant	: Dai Kamiya	: DECISION ON REQUEST FOR
Patent Number	: 7644444	: RECALCULATION of PATENT
Issue Date	: 01/05/2010	: TERM ADJUSTMENT IN VIEW
Appliction No	: 10/684,968	: OF WYETH AND NOTICE OF INTENT TO
Filed	: 10/14/2003	: ISSUE CERTIFICATE OF CORRECTION
		:

The Request for Recalculation is **GRANTED** to the extent indicated.

The patent term adjustment has been determined to be **995** days. The USPTO will *sua sponte* issue a certificate of correction reflecting the amount of PTA days determined by the recalculation.

Prior to the issuance of the certificate of correction, the USPTO will afford patentee an opportunity to be heard and request reconsideration. Accordingly, patentee has **one month or thirty (30) days**, whichever is longer, to file a request for reconsideration of this patent term adjustment calculation. See 35 U.S.C. 154(b)(3)(B)(ii) and 37 CFR 1.322(a)(4). No extensions of time will be granted under 37 CFR 1.136.

Patentee should use document code PET.OP if electronically filing a request for reconsideration of this patent term adjustment calculation. The patentee must also include the information required by 37 CFR 1.705(b)(2) and the fee required by 37 CFR 1.18(e). If patentee does not file a timely request for reconsideration of this patent term adjustment calculation including the information required by 37 CFR 1.705(b)(2) and the fee required by 37 CFR 1.18(e), the USPTO will issue a certificate of correction reflecting the PTA determination noted above.

Patentee should be aware that in order to preserve the right to review in the United States District Court for the District of Columbia of the USPTO patent term adjustment determination, patentee must ensure that he or she also take the steps required under 35 U.S.C. 154(b)(4)(A) in a timely manner. Nothing in the request for recalculation should be construed as providing an alternative time frame for commencing a civil action under 35 U.S.C. 154(b)(4)(A).

Any questions concerning this decision should be directed to the Office of Patent Legal Administration at 571-272-7702.

UNITED STATES PATENT AND TRADEMARK OFFICE

UNITED STATES DEPARTMENT OF COMMERCE
United States Patent and Trademark Office
Address: COMMISSIONER FOR PATENTS
P.O. Box 1450
Alexandria, Virginia 22313-1450
www.uspto.gov

INDIANAPOLIS OFFICE 27879
BRINKS HOFER GILSON & LIONE
CAPITAL CENTER, SUITE 1100
201 NORTH ILLINOIS STREET
INDIANAPOLIS, IN 46204-4220

Mail Date: 05/18/2010

Applicant : Dai Kamiya
Patent Number : 7644444
Issue Date : 01/05/2010
Application No: 10/684,968
Filed : 10/14/2003

: NOTICE CONCERNING IMPROPER
: CALCULATION OF PATENT TERM
: ADJUSTMENT BASED UPON USPTO
: IMPROPERLY MEASURING REDUCTION
: PERIOD UNDER 37 CFR 1.704(c)(10).

The United States Patent and Trademark Office (USPTO) discovered that in processing the recent recalculation decisions mailed in response to patentee's filed Request for Recalculation of Patent Term Adjustment in view of Wyeth, the USPTO improperly measured the reduction period for reductions under 37 CFR 1.704(c)(10). Pursuant to 37 CFR 1.704(c)(10), patentee's reduction begins on the date of filing the amendment under 37 CFR 1.312 ("1.312 amendment") or other related paper and ends on the date that the Office mails a response to the filing of the 1.312 amendment or other paper. It has been discovered that during the recalculation, the calculation failed to the limit the reduction to the mail date of the response to the 1.312 amendment or other paper. Accordingly, patentee's reductions were greater than warranted.

This notice **VACATES** the previous GRANTED request for recalculation and provides patentee with a revised GRANTED recalculation.

The patent term adjustment has been determined to be **1051** days. The USPTO will *sua sponte* issue a certificate of correction reflecting the amount of patent term adjustment (PTA) days determined by the recalculation.

Prior to the issuance of the certificate of correction, the USPTO will afford patentee an opportunity to be heard and request reconsideration. Accordingly, patentee has **one month or thirty (30) days** from the mail date of this notice, whichever is longer, to file a request for reconsideration of this PTA calculation. See 35 U.S.C. § 154(b)(3)(B)(ii) and 37 CFR 1.322(a)(4).

Patentee should use document code PET.OP if electronically filing a request for reconsideration of this PTA calculation. The patentee must also include the information required by 37 CFR 1.705(b)(2), and the fee required by 37 CFR 1.18(e). If patentee does not file a timely request for reconsideration of this PTA calculation, including the information required by 37 CFR 1.705(b)(2) and the fee required by 37 CFR 1.18(e), the USPTO will issue a certificate of correction reflecting the PTA determination noted above.

Patentee should be aware that in order to preserve the right of review of the USPTO's PTA determination in the United States District Court for the District of Columbia, patentee must ensure that the steps required under 35 U.S.C. § 154 (b)(4) are taken in a timely manner. Nothing in the request for recalculation should be construed as providing an alternative time frame for commencing a civil action under 35 U.S.C. § 154(b)(4).

UNITED STATES PATENT AND TRADEMARK OFFICE

COMMISSIONER FOR PATENTS
UNITED STATES PATENT AND TRADEMARK OFFICE
P.O. BOX 1450
ALEXANDRIA, VA 22313-1450
www.uspto.gov

GROSSMAN, TUCKER, PERREAULT & PFLEGER, PLLC
55 SOUTH COMMERICAL STREET
MANCHESTER, NH 03101

COPY MAILED

JAN 24 2005

OFFICE OF PETITIONS

In re Application of :
William L. Densham, et al. :
Application No. 10/685,043 : ON PETITION
Filed: October 14, 2003 :
Attorney Docket No. 02MICRO 00.07 CON :

This is a decision on the petition, filed January 13, 2005, under 37 CFR 1.313(c)(2) to withdraw the above-identified application from issue after payment of the issue fee.

Petitioner indicates that a Request for Continued Examination (RCE) and an Information Disclosure Statement (IDS) are being submitted simultaneously via express mail. Receipt is acknowledged of the $790 fee for filing a RCE on January 13, 2005.

The petition is **GRANTED**.

The above-identified application is withdrawn from issue for consideration of a submission under 37 CFR 1.114 (request for continued examination). See 37 CFR 1.313(c)(2).

Petitioner is advised that the issue fee paid on November 19, 2004, in the above-identified application cannot be refunded. If, however, the above-identified application is again allowed, petitioner may request that it be applied towards the issue fee required by the new Notice of Allowance. [1]

Telephone inquiries relating to this decision should be directed to the undersigned at (571) 272-3204.

The application is being referred to Technology Center AU 2838 for further processing of the request for continued examination under 37 CFR 1.114.

Sherry D. Brinkley
Petitions Examiner
Office of Petitions
Office of the Deputy Commissioner
for Patent Examination Policy

[1]The request to apply the issue fee to the new Notice may be satisfied by completing and returning the new Issue Fee Transmittal Form PTOL-85(b), which includes the following language thereon: "Commissioner for Patents is requested to apply the Issue Fee and Publication Fee (if any) or re-apply any previously paid issue fee to the application identified above." Petitioner is advised that, whether a fee is indicated as being due or not, the Issue Fee Transmittal Form **must** be completed and timely submitted to avoid abandonment. Note the language in bold text on the first page of the Notice of Allowance and Fee(s) Due (PTOL-85).

UNITED STATES PATENT AND TRADEMARK OFFICE

Commissioner for Patents
United States Patent and Trademark Office
P.O. Box 1450
Alexandria, VA 22313-1450
www.uspto.gov

GROSSMAN TUCKER PERREAULT
& PFLEGER PLLC
55 SOUTH COMMERCIAL STREET
MANCHESTER, NH 03101

COPY MAILED

JAN 11 2006

OFFICE OF PETITIONS

In re Application of :
William L. Densham et al :
Application No. 10/685,043 : DECISION GRANTING PETITION
Filed: October 14, 2003 : UNDER 37 CFR 1.313(c)(2)
Attorney Docket No. 02MICRO 00.07 CON :

This is a decision on the petition, filed January 6, 2005, under 37 CFR 1.313(c)(2) to withdraw the above-identified application from issue after payment of the issue fee.

The petition is **GRANTED**.

The above-identified application is withdrawn from issue for consideration of a submission under 37 CFR 1.114 (request for continued examination). See 37 CFR 1.313(c)(2).

Petitioner is advised that the issue fee paid on December 1, 2005 in the above-identified application cannot be refunded. If, however, the above-identified application is again allowed, petitioner may request that it be applied towards the issue fee required by the new Notice of Allowance.[1]

Telephone inquiries should be directed to the undersigned at (571) 272-3218.

This matter is being referred to Technology Center AU 2838 for processing of the request for continued examination under 37 CFR 1.114 and for consideration of the Information Disclosure Statement.

Frances Hicks
Petitions Examiner
Office of Petitions

---

[1] *The request to apply the issue fee to the new Notice may be satisfied by completing and returning the new Issue Fee Transmittal Form PTOL-85(b) (along with any balance due at the time of payment), which includes the following language thereon: "Commissioner for Patents is requested to apply the Issue Fee and Publication Fee (if any) or re-apply any previously paid issue fee to the application identified above." Petitioner is advised that, whether a fee is indicated as being due or not, the Issue Fee Transmittal Form* ***must*** *be completed and timely submitted to avoid abandonment. Note the language in bold text on the first page of the Notice of Allowance and Fee(s) Due (PTOL-85).*

UNITED STATES PATENT AND TRADEMARK OFFICE

UNITED STATES DEPARTMENT OF COMMERCE
United States Patent and Trademark Office
Address: COMMISSIONER FOR PATENTS
P.O. Box 1450
Alexandria, Virginia 22313-1450
www.uspto.gov

CONLEY ROSE, P.C.
David A. Rose
P. O. BOX 3267
HOUSTON, TX 77253-3267

Mail Date: 04/20/2010

Applicant	: Robert E. Englekirk	: DECISION ON REQUEST FOR
Patent Number	: 7596922	: RECALCULATION of PATENT
Issue Date	: 10/06/2009	: TERM ADJUSTMENT IN VIEW
Appliction No	: 10/685,048	: OF WYETH AND NOTICE OF INTENT TO
Filed	: 10/14/2003	: ISSUE CERTIFICATE OF CORRECTION
		:

The Request for Recalculation is **GRANTED** to the extent indicated.

The patent term adjustment has been determined to be **874** days. The USPTO will *sua sponte* issue a certificate of correction reflecting the amount of PTA days determined by the recalculation.

Prior to the issuance of the certificate of correction, the USPTO will afford patentee an opportunity to be heard and request reconsideration. Accordingly, patentee has **one month or thirty (30) days**, whichever is longer, to file a request for reconsideration of this patent term adjustment calculation. See 35 U.S.C. 154(b)(3)(B)(ii) and 37 CFR 1.322(a)(4). No extensions of time will be granted under 37 CFR 1.136.

Patentee should use document code PET.OP if electronically filing a request for reconsideration of this patent term adjustment calculation. The patentee must also include the information required by 37 CFR 1.705(b)(2) and the fee required by 37 CFR 1.18(e). If patentee does not file a timely request for reconsideration of this patent term adjustment calculation including the information required by 37 CFR 1.705(b)(2) and the fee required by 37 CFR 1.18(e), the USPTO will issue a certificate of correction reflecting the PTA determination noted above.

Patentee should be aware that in order to preserve the right to review in the United States District Court for the District of Columbia of the USPTO patent term adjustment determination, patentee must ensure that he or she also take the steps required under 35 U.S.C. 154(b)(4)(A) in a timely manner. Nothing in the request for recalculation should be construed as providing an alternative time frame for commencing a civil action under 35 U.S.C. 154(b)(4)(A).

Any questions concerning this decision should be directed to the Office of Patent Legal Administration at 571-272-7702.

SPE RESPONSE FOR CERTIFICATE OF CORRECTION

Paper No.: _____

DATE : 10-18-07

10/685,080

TO SPE OF : ART UNIT 1714

SUBJECT : Request for Certificate of Correction for Appl. No.: 10/685,080 Patent No.: 7163969

Please respond to this request for a certificate of correction within 7 days.

Please review the requested changes/corrections as shown in the COCIN document(s) in the IFW application image. No new matter should be introduced, nor should the scope or meaning of the claims be changed. Please Check Claims

Please complete the response (see below) and forward the completed response to scanning using document code COCX.

Certificates of Correction Branch

703-308-9390 ext. _____

Thank You For Your Assistance

The request for issuing the above-identified correction(s) is hereby:

Note your decision on the appropriate box.

☐ Approved	All changes apply.
☐ Approved in Part	Specify below which changes do not apply.
☒ Denied	State the reasons for denial below.

Comments: PTO did not make an error contrary to Patentee's assertion since amendment filed on 9/11/06 showed that claim 2 is dependent on the claim 9 (claim 7 of the patent). Thus, the sequence of claims had been modified, and the patent contains all claims of the amendment with a proper sequence. Also, the instant COC having claim 2 dependent on latter claim 9 would be improper.

SPE

1796

Art Unit

UNITED STATES PATENT AND TRADEMARK OFFICE

Commissioner for Patents
United States Patent and Trademark Office
P.O. Box 1450
Alexandria, VA 22313-1450
www.uspto.gov

Date Mailed : June 23, 2008

Patent No. : 7,163,969
Patent Issued : Jan. 16, 2007
Docket No. : 5003073.046US1

Re: Request for Certificate of Correction

Consideration has been given your request for the issuance of a certificate of correction for the above-identified patent under the provisions of Rule(s)1.322 .

The alleged error(s) PTO did not make an error contrary to Patentee's assertion since amendment filed on 9/11/06 showed that claim 2 is dependent on the claim 9 (claim 7 of the patent). Thus, the sequence of claims had been modified, and the patent contains all claims of the amendment with a proper sequence.Also, the instant CofC having claim 2 dependent on latter claim 9 would be improper. the patent is printed in accordance with the record .In view of the foregoing, your request, in this matter(s), is hereby denied.

Further consideration/reconsideration will be given upon receipt of a Request for Reconsideration under, under the provision of U.SC.254 or 255 (C.F.R. 1.322 or 1.323), accompanied by the appropriate response or fee of $100, which should be directed to Decisions & Certificates of Correction Branch.

Ennis Young
Legal Instrument Examiner
(703) 308-9390 ext.117
For Mary Diggs, Supervisor
Decisions & Certificates of Correction Branch
(703) 308-9390 ext.125 or (703) 303-8309 (Receptionist)

UNITED STATES PATENT AND TRADEMARK OFFICE

Commissioner for Patents
United States Patent and Trademark Office
P.O. Box 1450
Alexandria, VA 22313-1450
www.uspto.gov

PAUL APPELBAUM
16371 WIMBLEDON LANE
HUNTINGTON BEACH, CA 92649

COPY MAILED

JUN 17 2005

OFFICE OF PETITIONS

In re Application of :
Paul Appelbaum, et al. :
Application No. 10/685,092 : ON PETITION
Filed: October 14, 2003 :
Attorney Docket No. N/A :

This is a decision on the petition under 37 CFR 1.137(b), filed January 25, 2005, to revive the above-identified application.

The petition is **DISMISSED.**

Any request for reconsideration of this decision must be submitted within TWO (2) MONTHS from the mail date of this decision. Extensions of time under 37 CFR 1.136(a) are permitted. The reconsideration request should include a cover letter entitled "**Renewed Petition under 37 CFR 1.137(b)**." This is **not** final agency action within the meaning of 5 U.S.C. § 704.

The petition for revival of an application for patent abandoned unintentionally under 37 CFR 1.137(b) submitted on January 25, 2005 was signed by one inventor. All communications must be signed by both inventors. 37 CFR 1.33(b) states:

> "Amendments and other papers filed in the application must be signed by: (1) An attorney or agent of record appointed in compliance with § 1.34(b); (2) A registered attorney or agent not of record who acts in a representative capacity under the provisions of § 1.34(a); (3) The assignee of record of the entire interest, if there is an assignee of record of the entire interest; (4) An assignee of record of an undivided part interest, and any assignee(s) of the remaining interest and any applicant retaining an interest, if there is an assignee of record of an undivided part interest; or (5) All of the applicants (§§ 1.42. 1.43 and 1.47) for patent, unless there is an assignee of record of the entire interest and such assignee has taken action in the application in accordance with §§ 3.71 and 3.73."

Further correspondence with respect to this matter should be addressed as follows:

By mail: Mail Stop PETITIONS
Commissioner for Patents
Post Office Box 1450
Alexandria, VA 22313-1450

By hand: Customer Service Window
Mail Stop Petitions
Randolph Building
401 Dulany Street
Alexandria, VA 22314

By fax: (703) 872-9306
ATTN: Office of Petitions

Telephone inquiries concerning this decision should be directed to the undersigned at (571) 272-3229.

Retta Williams

Retta Williams
Petitions Examiner
Office of Petitions
Office of the Deputy Commissioner
for Patent Examination Policy

UNITED STATES PATENT AND TRADEMARK OFFICE

Commissioner for Patents
United States Patent and Trademark Office
P.O. Box 1450
Alexandria, VA 22313-1450
www.uspto.gov

PAUL APPELBAUM
16371 WIMBLEDON LANE
HUNTINGTON BEACH, CA 92649

COPY MAILED

NOV 1 4 2005

OFFICE OF PETITIONS

In re Application of :
Paul Appelbaum, et al. :
Application No. 10/685,092 : ON PETITION
Filed: October 14, 2003 :
Attorney Docket No. :

This is a decision on the renewed petition under 37 CFR 1.137(b) filed July 6, 2005, to revive the above-identified application.

The petition is **GRANTED.**

The above-identified application became abandoned for failure to reply in a timely manner to the Notice to File Missing Parts of Nonprovisional Application mailed March 24, 2004. The Notice set a period for reply of two (2) months from the mail date of the Notice. No extensions of time under the provisions of 37 CFR 1.136(a) were obtained. Accordingly, the above-identified application became abandoned on May 25, 2004.

Telephone inquiries concerning this decision should be directed to the undersigned at (571) 272-3229.

This application matter is being forwarded to the Office of Initial Patent Examination for further processing.

Retta Williams

Retta Williams
Petitions Examiner
Office of Petitions

UNITED STATES PATENT AND TRADEMARK OFFICE

COMMISSIONER FOR PATENTS
UNITED STATES PATENT AND TRADEMARK OFFICE
P.O. BOX 1450
ALEXANDRIA, VA 22313-1450
www.uspto.gov

PAUL APPELBAUM
16371 WIMBLEDON LANE
HUNTINGTON BEACH, CA 92649

COPY MAILED

DEC 07 2005

OFFICE OF PETITIONS

In re Application of :

Paul Appelbaum et al :
Application No. 10/685,092 :
Filed: October 14, 2003 :
For: Package with snap-lock lid :

DECISION ON PETITION
TO MAKE SPECIAL UNDER
37 CFR 1.102(c)(1)

This is a decision on the petition under 37 CFR 1.102(c)(1), filed January 31, 2005, to make the above-identified application special based on applicant's age as set forth in M.P.E.P. § 708.02, Section IV.

The petition is **GRANTED**.

A grantable petition to make an application special under 37 CFR 1.102(c)(1) and MPEP § 708.02, Section IV: Applicant's Age must be accompanied by evidence showing that at least one of the applicants is 65 years of age, or more, such as a birth certificate or a statement by applicant. No fee is required

The instant petition includes a statement by Paul Appelbaum attesting that he is over 65 years of age. Accordingly, the above-identified application has been accorded "special" status.

Telephone inquiries concerning this decision should be directed to Wan Laymon at 571-272-3220.

All other inquiries concerning either the examination or status of the application should be directed to the Technology Center.

This matter will be referred to the Technology Center AU 3728 for action on the merits commensurate with this decision.

Amelia Au
Petitions Examiner
Office of Petitions

UNITED STATES PATENT AND TRADEMARK OFFICE

Commissioner for Patents
United States Patent and Trademark Office
P.O. Box 1450
Alexandria, VA 22313-1450
www.uspto.gov

DINSMORE & SHOHL LLP
ONE DAYTON CENTRE, ONE SOUTH MAIN STREET
SUITE 1300
DAYTON OH 45402-2023

COPY MAILED

DEC 2 3 2008

OFFICE OF PETITIONS

In re Application of :
Bryce C. Waggoner, et al. :
Application No. 10/685,095 : DECISION ON PETITION
Filed: October 10, 2003 :
Attorney Docket No. STD1200PA/41213.551 :

This is a decision on the petition under the unintentional provisions of 37 CFR 1.137(b), filed September 16, 2008, to revive the above-identified application.

This application became abandoned as a result of petitioner's failure to file a complete and proper appeal brief within the time period provided in 37 CFR 41.37(a)(1). As a complete and proper appeal brief was not filed within one (1) month of the Notification of Non-Compliance with 37 CFR 41.37(c)(1), mailed January 17, 2008, and no extensions of time under the provisions of 37 CFR 1.136(a) were obtained, the appeal was dismissed and the proceedings as to the rejected claims were terminated. See 37 CFR 1.197(b). As no claim was allowed, the application became abandoned on February 18, 2008. See MPEP 1215.04.

The petition satisfies the requirements of 37 CFR 1.137(b) in that petitioner has supplied (1) the reply in the form of a reply, (2) the petition fee of $1540, and (3) a proper statement of unintentional delay.

The petition is **GRANTED**.

Telephone inquiries concerning this decision should be directed to undersigned at (571) 272-1642.

This application is being referred to Technology Center AU 1794 for appropriate action by the Examiner in the normal course of business on the reply received September 16, 2008.

April M. Wise
Petitions Examiner
Office of Petitions

UNITED STATES PATENT AND TRADEMARK OFFICE

Commissioner for Patents
United States Patent and Trademark Office
P.O. Box 1450
Alexandria, VA 22313-1450
www.uspto.gov

BARLEY SNYDER, LLC
1000 WESTLAKES DRIVE, SUITE 275
BERWYN PA 19312

COPY MAILED
DEC 22 2006
OFFICE OF PETITIONS

In re Application of :
TEMESI et al. :
Application No. 10/685,112 :
Filed: October 14, 2003 :
Attorney Docket No. 21334-1267 :

DECISION
ON PETITION

This is a decision on the petition under 37 CFR 1.137(b), filed August 14, 2006, to revive the above-identified application.

The petition is **GRANTED**.

The application became abandoned for failure to reply within the meaning of 37 CFR 1.113 in a timely manner to the final Office action mailed July 7, 2005, which set a shortened statutory period for reply of three (3) months. No extensions of time under the provisions of 37 CFR 1.136(a) were obtained. Accordingly, the application became abandoned on October 8, 2005.

The petition satisfies the conditions for revival pursuant to the provisions of 37 CFR 1.137(b) in that (1) the reply in the form of a RCE, a submission on September 7, 2005 that meets the reply requirements of 37 CFR 1.111, and the requisite fee; (2) the petition fee of $1500; and (3) the required statement of unintentional delay have been received. Accordingly, the reply to the final rejection of July 7, 2005 is accepted as having been unintentionally delayed.

Telephone inquiries concerning this decision should be directed to the undersigned at (571) 272-4787.

The application matter is being forwarded to Technology Center Art Unit 2838.

Denise Pothier
Petitions Examiner
Office of Petitions

UNITED STATES PATENT AND TRADEMARK OFFICE

Commissioner for Patents
United States Patent and Trademark Office
P.O. Box 1450
Alexandria, VA 22313-1450
www.uspto.gov

WYATT, TARRANT & COMBS, LLP
1715 AARON BRENNER DRIVE
SUITE 800
MEMPHIS TN 38120-4367

COPY MAILED

MAR 2 3 2007

OFFICE OF PETITIONS

In re Application of :
Joseph Bernard Rink, Jr. :
Application No. 10/685,114 : ON PETITION
Filed: October 14, 2003 :
Attorney Docket No. A317394.4US :
For: STACKED ASSEMBLY OF DISPOSABLE BIOHAZARD CONTAINMENT BAGS HAVING A REINFORCED HOLDER

This is a decision on the petition under 37 CFR 1.181, filed February 7, 2007 (certificate of mailing date February 5, 2007), to withdraw the holding of abandonment of the above-identified application.

The petition under 37 CFR 1.181 is **granted**.

This application was held abandoned for failure to respond in a timely manner to the non-final Office action mailed on May 26, 2006, which set an extendable one month period for reply. The Office had no record of receiving an extension of time or a reply to the May 26, 2006 non-final Office action in application no. 10/685,114. Therefore, the Office considered the application abandoned on June 27, 2006. A Notice of Abandonment was mailed on January 17, 2007.

Petitioner asserts that a proper response in the form of an election, an amendment, and a petition for a one month extension of time and required fee was timely filed on certificate of mailing date July 19, 2006. A review of a copy of the amendment and extension of time reveals that the application number is listed as 10/641,559. Therefore, the amendment and extension of time were not associated with application no. 10/685,114's file.

Even though petitioner cited the wrong application number on the amendment and extension of time, under MPEP 502, " A minor error in the identification of the application can be corrected by the group provided the correct identification can be quickly discovered. Examples of minor errors are transposed numbers, typographical errors, and listing the parent application number." The undersigned believes that a relatively simple review of Office records would have yielded the correct application number to enable the Office to match the July 19, 2006 correspondence with this application file. A cross-referencing of any of the accurate identifiers found on the

amendment and extension of time with Office databases would have revealed the typographical errors.

The undersigned will request that the July 19, 2006 correspondence found in the file of application no. 10/641,559 be removed and placed in the file of the above-identified application.

The July 19, 2006 amendment and extension of time were timely filed. Accordingly, the petition is **GRANTED**, the Notice of Abandonment is hereby **vacated**, and the holding of abandonment withdrawn.

Petitioner was charged two $60.00 extension of time fees. Deposit account no. 50-2346 will be credited one $60.00 fee.

The application file will be forwarded to the Technology Center AU 3653 for consideration of the amendment filed on certificate of mailing date July 19, 2006 and resubmitted with the present petition.

Telephone inquiries pertaining to this matter may be directed to the undersigned at (571) 272-3230.

Shirene Willis Brantley

Shirene Willis Brantley
Senior Petitions Attorney
Office of Petitions
Office of the Deputy Commissioner
for Patent Examination Policy

UNITED STATES PATENT AND TRADEMARK OFFICE

Commissioner for Patents
United States Patent and Trademark Office
P.O. Box 1450
Alexandria, VA 22313-1450
www.uspto.gov

Townsend and Townsend and Crew, LLP
Two Embarcadero Center
Eighth Floor
San Francisco, CA 94111-3834

COPY MAILED

MAY 12 2008

In re Application of :
James F. Zucherman et al. :
Application No. 10/685,134 : DECISION ON PETITION
Filed: October 14, 2003 : TO WITHDRAW
Attorney Docket No. 19433A-008310US : FROM RECORD
:

This is a decision on the Request to Withdraw as attorney or agent of record under 37 C.F.R. § 1.36(b), filed November 10, 2007.

The request is **NOT APPROVED** as moot.

A review of the file record indicates that the power of attorney to Mark D. Barrish and all attorneys/agents associated with customer number 20350 has been revoked by the assignee of the patent application on January 22, 2008. Accordingly, the request to withdraw under 37 C.F.R. § 1.36(b) is moot.

All future communications from the Office will continue to be directed to the below-listed address until otherwise notified by applicant.

Telephone inquires concerning this decision should be directed to Kimberly Inabinet at 571-272- 4618.

Kimberly Inabinet
Petitions Examiner
Office of Petitions

cc: Haynes and Boone, LLP
901 Main Street
Suite 3100
Dallas, TX 75202

UNITED STATES PATENT AND TRADEMARK OFFICE

Commissioner for Patents
United States Patent and Trademark Office
P.O. Box 1450
Alexandria, VA 22313-1450
www.uspto.gov

GARLICK HARRISON & MARKISON
P.O. BOX 160727
AUSTIN TX 78716-0727

COPY MAILED

SEP 3 0 2008

OFFICE OF PETITIONS

In re Application of	:
Joseph B. Rowlands	:
Application No. 10/685136	: DECISION ON PETITION
Filing or 371(c) Date: 10/14/2003	: UNDER 37 CFR 1.78(a)(3) AND (a)(6)
Attorney Docket No. BP3247	:

This is a decision on the petition under 37 CFR §§ 1.78(a)(3), filed July 18, 2008, to accept an unintentionally delayed claim under 35 U.S.C. §§120 and 119(e) for the benefit of priority to the prior-filed applications set forth in the concurrently filed Amendment. The petition is properly treated under 37 CFR §§ 1.78(a)(3) and 1.78(a)(6).

The petition is **DISMISSED.**

A petition for acceptance of a claim for late priority under 37 CFR §§ 1.78(a)(3) and 1.78(a)(6) is only applicable to those applications filed on or after November 29, 2000. Further, the petition is appropriate only after the expiration of the period specified in 37 CFR §§ 1.78(a)(2)(ii) and 1.78(a)(5)(ii). In addition, the petition under 37 CFR §§ 1.78(a)(3) and 1.78(a)(6) must be accompanied by:

(1) the reference required by 35 U.S.C. §§ 120 and 119(e) and 37 CFR §§ 1.78(a)(2)(i) and 1.78(a)(5)(i) of the prior-filed application, unless previously submitted;
(2) the surcharge set forth in § 1.17(t); and
(3) a statement that the entire delay between the date the claim was due under 37 CFR §§ 1.78(a)(2)(ii) and 1.78(a)(5)(ii) and the date the claim was filed was unintentional. The Director may require additional where there is a question whether the delay was unintentional.

The petition does not satisfy item (1) above.

The reference to add the above-noted, prior-filed applications on page one following the first sentence of the specification is not acceptable as drafted since it improperly incorporates by reference prior-filed application 10/269,922. An incorporation by

reference statement added after an application's filing date is not effective because no new matter can be added to an application after its filing date (*see* 35 U.S.C. § 132(a)). If an incorporation by reference statement is included in an amendment to the specification to add a benefit claim under 35 U.S.C. § 120 after the filing date of the application, the amendment would not be proper. When a benefit claim under 35 U.S.C. § 120 is submitted after the filing of an application, the reference to the prior application cannot include an incorporation by reference statement of the prior application. *See* Dart Industries v. Banner, 636 F.2d 684, 207 USPQ 273 (C.A.D.C. 1980). *Note* MPEP §§ 201.06(c) and 608.04(b).

Before the petition under 37 CFR §§ 1.78(a)(3) and 1.78(a)(6) can be granted, a renewed petition and either an Application Data Sheet or a substitute amendment (complying with the provisions of 37 CFR 1.121 and 37 CFR 1.76(b)(5)) to correct the above matters are required.

Further correspondence with respect to this matter should be addressed as follows:

By mail: Mail Stop PETITIONS
Director for Patents
Post Office Box 1450
Alexandria, VA 22313-1450

By hand: Customer Service Window
Mail Stop Petitions
Randolph Building
401 Dulany Street
Alexandria, VA 22314

By fax: (571) 273-8300
ATTN: Office of Petitions

Any questions concerning this matter may be directed to Derek Woods at (571) 272-3232.

Anthony Knight
Supervisor
Office of Petitions

UNITED STATES PATENT AND TRADEMARK OFFICE

Commissioner for Patents
United States Patent and Trademark Office
P.O. Box 1450
Alexandria, VA 22313-1450
www.uspto.gov

GARLICK HARRISON & MARKISON
P.O. BOX 160727
AUSTIN TX 78716-0727

COPY MAILED
NOV 24 2008

In re Application of :
Joseph B. Rowlands :
Application No. 10/685136 : DECISION ON PETITION
Filing or 371(c) Date: 10/14/2003 : UNDER 37 CFR 1.78(a)(3) AND (a)(6)
Attorney Docket No. BP3247 :

This is a decision on the renewed petition under 37 CFR §§ 1.78(a)(3), filed October 22, 2008, to accept an unintentionally delayed claim under 35 U.S.C. §§120 and 119(e) for the benefit of priority to the prior-filed applications set forth in the concurrently filed Amendment. The petition is properly treated under 37 CFR §§ 1.78(a)(3) and 1.78(a)(6).

The petitions are **GRANTED.**

A petition for acceptance of a claim for late priority under 37 CFR §§ 1.78(a)(3) and 1.78(a)(6) is only applicable to those applications filed on or after November 29, 2000. Further, the petition is appropriate only after the expiration of the period specified in 37 CFR §§ 1.78(a)(2)(ii) and 1.78(a)(5)(ii). In addition, the petition under 37 CFR §§ 1.78(a)(3) and 1.78(a)(6) must be accompanied by:

(1) the reference required by 35 U.S.C. §§ 120 and 119(e) and 37 CFR §§ 1.78(a)(2)(i) and 1.78(a)(5)(i) of the prior-filed application, unless previously submitted;
(2) the surcharge set forth in § 1.17(t); and
(3) a statement that the entire delay between the date the claim was due under 37 CFR §§ 1.78(a)(2)(ii) and 1.78(a)(5)(ii) and the date the claim was filed was unintentional. The Director may require additional where there is a question whether the delay was unintentional.

Additionally, the instant nonprovisional application must be pending at the time of filing of the reference to the prior-filed provisional application(s) as required by 37 CFR 1.78(a)(5)(ii). Further, the nonprovisional application(s) claiming the benefit of the prior-filed provisional application(s) must have been filed within twelve months of the filing date of the prior-filed provisional application(s).

All of the above requirements having been satisfied, the late claim for benefit of priority to the prior-filed applications under 35 U.S.C. §§ 120 and 119(e) is accepted as being unintentionally delayed.

It is noted that the statement of unintentional delay varies from the rule and has been interpreted to be that the entire delay between the date the claim was due under paragraph (a)(2(ii) and (a)(5)(ii) was unintentional. If this interpretation is not correct petitioner is required to promptly notify this Office.

The granting of the petition to accept the delayed benefit claim to the prior-filed applications under 37 CFR §§ 1.78(a)(3) and 1.78(a)(6) should not be construed as meaning that this application is entitled to the benefit of the filing date of the prior-filed applications. In order for this application to be entitled to the benefit of the prior-filed applications, all other requirements under 35 U.S.C. §§120 and 1.78(a)(1) and (a)(2) and under 35 U.S.C. §119(e) and 37 CFR 1.78(a)(4) and (a)(5) must be met. Similarly, the fact that the corrected Filing Receipt accompanying this decision on petition includes the prior-filed applications should not be construed as meaning that applicant is entitled to the claim for benefit of priority to the prior-filed applications noted thereon. Accordingly, the examiner will, in due course, consider this benefit claim and determine whether the application is entitled to the benefit of the earlier filing date.

A corrected Filing Receipt, which includes the priority claim to the prior-filed applications, accompanies this decision on petition.

Any questions concerning this matter may be directed to Derek Woods at (571) 272-3232. All other inquiries concerning either the examination procedures or status of the application should be directed to the Technology Center.

This application is being referred to Technology Center Art Unit 2182 for consideration by the examiner of the claim for benefit of priority under 35 U.S.C. § §120 and 119(e) to the prior-filed applications.

Anthony Knight
Supervisor
Office of Petitions

ATTACHMENT: Corrected Filing Receipt

UNITED STATES PATENT AND TRADEMARK OFFICE

UNITED STATES DEPARTMENT OF COMMERCE
United States Patent and Trademark Office
Address: COMMISSIONER FOR PATENTS
P.O. Box 1450
Alexandria, Virginia 22313-1450
www.uspto.gov

APPLICATION NUMBER	FILING or 371(c) DATE	GRP ART UNIT	FIL FEE REC'D	ATTY.DOCKET.NO	TOT CLAIMS	IND CLAIMS
10/685,136	10/14/2003	2182	770	BP3247	18	2

CONFIRMATION NO. 4505

CORRECTED FILING RECEIPT

51472
GARLICK HARRISON & MARKISON
P.O. BOX 160727
AUSTIN, TX 78716-0727

Date Mailed: 11/07/2008

Receipt is acknowledged of this non-provisional patent application. The application will be taken up for examination in due course. Applicant will be notified as to the results of the examination. Any correspondence concerning the application must include the following identification information: the U.S. APPLICATION NUMBER, FILING DATE, NAME OF APPLICANT, and TITLE OF INVENTION. Fees transmitted by check or draft are subject to collection. Please verify the accuracy of the data presented on this receipt. **If an error is noted on this Filing Receipt, please submit a written request for a Filing Receipt Correction. Please provide a copy of this Filing Receipt with the changes noted thereon. If you received a "Notice to File Missing Parts" for this application, please submit any corrections to this Filing Receipt with your reply to the Notice. When the USPTO processes the reply to the Notice, the USPTO will generate another Filing Receipt incorporating the requested corrections**

Applicant(s)

Joseph B. Rowlands, Santa Clara, CA;

Assignment For Published Patent Application

Broadcom Corporation, Irvine, CA

Power of Attorney:

William Kidd--31772
Gary Hamilton--31834
Timothy Markison--33534
Michael Cannatti--34791
Bruce Garlick--36520
James Harrison--40401
Robert McLauchlan--44924
Shayne Short--45105

Domestic Priority data as claimed by applicant

This application is a CIP of 10/269,922 10/11/2002 PAT 7,206,879
which claims benefit of 60/380,740 05/15/2002
and claims benefit of 60/331,789 11/20/2001
and claims benefit of 60/344,713 12/24/2001
and claims benefit of 60/348,777 01/14/2002
and claims benefit of 60/348,717 01/14/2002

Foreign Applications

If Required, Foreign Filing License Granted: 01/17/2004

The country code and number of your priority application, to be used for filing abroad under the Paris Convention, is **US 10/685,136**

Projected Publication Date: Not Applicable

Non-Publication Request: No

Early Publication Request: No

Title

Bridges performing remote reads and writes as uncacheable coherent

Preliminary Class

710

PROTECTING YOUR INVENTION OUTSIDE THE UNITED STATES

Since the rights granted by a U.S. patent extend only throughout the territory of the United States and have no effect in a foreign country, an inventor who wishes patent protection in another country must apply for a patent in a specific country or in regional patent offices. Applicants may wish to consider the filing of an international application under the Patent Cooperation Treaty (PCT). An international (PCT) application generally has the same effect as a regular national patent application in each PCT-member country. The PCT process **simplifies** the filing of patent applications on the same invention in member countries, but **does not result** in a grant of "an international patent" and does not eliminate the need of applicants to file additional documents and fees in countries where patent protection is desired.

Almost every country has its own patent law, and a person desiring a patent in a particular country must make an application for patent in that country in accordance with its particular laws. Since the laws of many countries differ in various respects from the patent law of the United States, applicants are advised to seek guidance from specific foreign countries to ensure that patent rights are not lost prematurely.

Applicants also are advised that in the case of inventions made in the United States, the Director of the USPTO must issue a license before applicants can apply for a patent in a foreign country. The filing of a U.S. patent application serves as a request for a foreign filing license. The application's filing receipt contains further information and guidance as to the status of applicant's license for foreign filing.

Applicants may wish to consult the USPTO booklet, "General Information Concerning Patents" (specifically, the section entitled "Treaties and Foreign Patents") for more information on timeframes and deadlines for filing foreign patent applications. The guide is available either by contacting the USPTO Contact Center at 800-786-9199, or it can be viewed on the USPTO website at http://www.uspto.gov/web/offices/pac/doc/general/index.html.

For information on preventing theft of your intellectual property (patents, trademarks and copyrights), you may wish to consult the U.S. Government website, http://www.stopfakes.gov. Part of a Department of Commerce initiative, this website includes self-help "toolkits" giving innovators guidance on how to protect intellectual property in specific countries such as China, Korea and Mexico. For questions regarding patent enforcement issues, applicants may call the U.S. Government hotline at 1-866-999-HALT (1-866-999-4158).

LICENSE FOR FOREIGN FILING UNDER

Title 35, United States Code, Section 184

Title 37, Code of Federal Regulations, 5.11 & 5.15

GRANTED

The applicant has been granted a license under 35 U.S.C. 184, if the phrase "IF REQUIRED, FOREIGN FILING LICENSE GRANTED" followed by a date appears on this form. Such licenses are issued in all applications where the conditions for issuance of a license have been met, regardless of whether or not a license may be required as set forth in 37 CFR 5.15. The scope and limitations of this license are set forth in 37 CFR 5.15(a) unless an earlier license has been issued under 37 CFR 5.15(b). The license is subject to revocation upon written notification. The date indicated is the effective date of the license, unless an earlier license of similar scope has been granted under 37 CFR 5.13 or 5.14.

This license is to be retained by the licensee and may be used at any time on or after the effective date thereof unless it is revoked. This license is automatically transferred to any related applications(s) filed under 37 CFR 1.53(d). This license is not retroactive.

The grant of a license does not in any way lessen the responsibility of a licensee for the security of the subject matter as imposed by any Government contract or the provisions of existing laws relating to espionage and the national security or the export of technical data. Licensees should apprise themselves of current regulations especially with respect to certain countries, of other agencies, particularly the Office of Defense Trade Controls, Department of State (with respect to Arms, Munitions and Implements of War (22 CFR 121-128)); the Bureau of Industry and Security, Department of Commerce (15 CFR parts 730-774); the Office of Foreign AssetsControl, Department of Treasury (31 CFR Parts 500+) and the Department of Energy.

NOT GRANTED

No license under 35 U.S.C. 184 has been granted at this time, if the phrase "IF REQUIRED, FOREIGN FILING LICENSE GRANTED" DOES NOT appear on this form. Applicant may still petition for a license under 37 CFR 5.12, if a license is desired before the expiration of 6 months from the filing date of the application. If 6 months has lapsed from the filing date of this application and the licensee has not received any indication of a secrecy order under 35 U.S.C. 181, the licensee may foreign file the application pursuant to 37 CFR 5.15(b).

UNITED STATES PATENT AND TRADEMARK OFFICE

Commissioner for Patents
United States Patent and Trademark Office
P.O. Box 1450
Alexandria, VA 22313-1450
www.uspto.gov

TOWNSEND AND TOWNSEND AND CREW, LLP
TWO EMBARCADERO CENTER
EIGHTH FLOOR
SAN FRANCISCO CA 94111-3834

COPY MAILED

DEC 26 2007

OFFICE OF PETITIONS

In re Application of :

MITCHELL, Steve :
Application No. 10/685,139 : DECISION ON PETITION
Filed: October 14, 2003 : TO WITHDRAW
Attorney Docket No. **19433A-003210US** : FROM RECORD
:

This is a decision on the Request to Withdraw as attorney or agent of record under 37 C.F.R. § 1.36(b), filed November 14, 2007.

The request is **APPROVED**.

A grantable request to withdraw as attorney/agent of record must be signed by every attorney/agent seeking to withdraw or contain a clear indication that one attorney is signing on behalf of another/others. A request to withdraw will not be approved unless at least 30 (thirty) days would remain between the date of approval and the later of the expiration date of a time to file a response or the expiration date of the maximum time period which can be extended under 37 C.F.R. § 1.136(a).

The request was signed by Mark Barrish on behalf of all attorneys of record who are associated. All attorneys/agents associated have been withdrawn. Applicant is reminded that there is no attorney of record at this time.

The request to change the correspondence of record is not acceptable as the requested correspondence address is not that of: (1) the first named signing inventor; or (2) an intervening assignee of the entire interest under 37 C.F.R 3.71. All future communications from the Office will be directed to the first named signing inventor at the first copied address below until otherwise properly notified by the applicant.

There is an outstanding Office action mailed July 17, 2007 that requires a reply from the applicant.

Telephone inquiries concerning this decision should be directed to Tredelle Jackson at 571-272-2783.

Monica A. Graves
Petitions Examiner
Office of Petitions

cc: **STEVE MITCHELL**
776 DUKE CIRCLE
PLEASANT HILL, CA 94523

cc: **JOHN R. OWEN**
COATS & BENNETT, P.L.L.C.
1400 CRESENT GREEN
SUITE 300
CARRY, NC 27511

UNITED STATES PATENT AND TRADEMARK OFFICE

Commissioner for Patents
United States Patent and Trademark Office
P.O. Box 1450
Alexandria, VA 22313-1450
www.uspto.gov

SEP 17 2004

Paper No. 090904

DUANE MORRIS LLP
100 COLLEGE ROAD WEST, SUITE 100
PRINCETON, NJ 08540

In re Application of:
ANTHONY D. KURTZ
Serial No.: 10/685,145
Filed: October 14, 2003
Attorney Docket No.: **N0843-00101**

DECISION ON REQUEST TO WITHDRAW FROM RECORD

This is a decision on the request to withdraw as attorney/agent of record under 37 C.F.R. § 1.36, filed August 02, 2004.

A grantable request to withdraw as attorney of record must be signed by every attorney seeking to withdraw or contain a clear indication that one attorney is signing on behalf of others. A request to withdraw will not be approved unless at least thirty (30) days would remain between the date of approval and the later of the expiration date of a time to file a response or the expiration date of the maximum time period, which can be extended under 37 C.F.R. § 1.136(a).

The request meets all the above stated requirements. The request was signed by Paul A. Schwarz, on behalf of himself and all the attorneys/agents of record. There is no outstanding Office action at this time.

The request is **APPROVED**.

All future communications from the Office will be directed to Plevy & Howard, at the below address, until otherwise notified by applicant.

Inquiries related to this decision should be directed to Clayton E. LaBalle at (571) 272-1594.

Clayton E. LaBalle, Special Programs Examiner
Technology Center 2800
Semiconductors, Electrical and Optical
Systems and Components

cc: PLEVY & HOWARD
600 NORTH EASTON ROAD
WILLOW GROVE, PA 19090

SPE RESPONSE FOR CERTIFICATE OF CORRECTION

Paper No.: _____

DATE : Aug 18, 2006

TO SPE OF : ART UNIT 2856 **(S.P.E. Williams, Hezron)**

SUBJECT : Request for Certificate of Correction for Appl. No.: 10/685145 Patent No.: 6848307

Please respond to this request for a certificate of correction within 7 days.

Please review the requested changes/corrections as shown in the **COCIN** document(s) in the IFW application image. No new matter should be introduced, nor should the scope or meaning of the claims be changed.

Please complete the response (see below) and forward the completed response to scanning using document code **COCX**.

J. Tan STACY POWELL

Certificates of Correction Branch

703-308-9390 ext. 120

Thank You For Your Assistance

The request for issuing the above-identified correction(s) is hereby:

Note your decision on the appropriate box.

☒ **Approved**	**All** changes apply.
☐ **Approved in Part**	**Specify below** which changes **do not** apply.
☐ **Denied**	State the reasons for denial below.

Comments: The Submission of Formal Drawings filed 12/13/04 are approved and does not introduce new matter.

HEZRON WILLIAMS
SUPERVISORY PATENT EXAMINER
TECHNOLOGY CENTER 2800

Hezron S. Williams 2856

SPE **Art Unit**

UNITED STATES PATENT AND TRADEMARK OFFICE

Commissioner for Patents
United States Patent and Trademark Office
P.O. Box 1450
Alexandria, VA 22313-1450
www.uspto.gov

JJGJR.: 08-07

Paper No:__

COPY MAILED

SEP 0 4 2007

OFFICE OF PETITIONS

MCDONNELL BOEHNEN
HULBERT & BERGHOFF LLP
300 S. WACKER DRIVE
32ND FLOOR
CHICAGO IL 60606

In re Application of	:	
Leendersten, et al.	:	DECISION
Application No. 10/685,147	:	
Filing Date: 14 October, 2003	:	
Attorney Docket No.: 02-1008-A	:	

This is a decision on the petition filed on 3 January, 2007, and properly considered as a request under 37 C.F.R. §1.181 for the withdrawal of the holding of abandonment.

The Office regrets the delay in addressing this matter, however, the instant petition was presented to the attorneys in the Office of Petitions only at this writing.[1]

For the reasons set forth below, the petition as considered under 37 C.F.R. §1.181 is **GRANTED**.

---

[1] NOTE: Monitoring of the status of applications on PAIR can inform one's management of application responses and provide an indication when mailings of Office actions should be expected. Status Inquiries filed at three (3) or four (4) month intervals provide a demonstration of diligence and attention in supporting a petition seeking relief under 37 C.F.R. §1.181.

BACKGROUND

The record indicates that:

- Petitioner failed to reply timely and properly to a non-final Office action mailed on 25 November, 2005, with reply due absent extension of time on or before 25 February, 2006;
- the application went abandoned by operation of law after midnight 25 February, 2006;
- the Office mailed the Notice of Abandonment on 4 December, 2006;
- on 3 January, 2007, Petitioner filed (over a 29 December, 2006, Certificate of Mailing) the instant petition, with, *inter alia*, an averment that the Examiner had prematurely abandoned the application in that Petitioner filed on 31 May, 2006, over a 25 May, 2006, Certificate of Mailing a Notice of Appeal and fee and a request and fee for extension of time to make timely that filing and that Petitioner further filed with the instant petition a Request for Continued Examination (RCE) with fee and a submission under 37 C.F.R. §1.114 and a request and fee to make timely that filing–and Office records evidence that history.

Out of an abundance of caution, Petitioners always are reminded that the filing of a petition under 37 C.F.R. §1.181 does not toll any periods that may be running any action by the Office and a petition seeking relief under the regulation must be filed within two (2) months of the act complained of (see: 37 C.F.R. §1.181(f)); and those registered to practice *and* all others who make representations before the Office must inquire into the underlying facts of representations made to the Office and support averments with the appropriate documentation–since all owe to the Office the continuing duty to disclose.[2]

---

[2] See supplement of 17 June, 1999. The Patent and Trademark Office is relying on petitioner's duty of candor and good faith and accepting a statement made by Petitioner. See Changes to Patent Practice and Procedure, 62 Fed. Reg. at 53160 and 53178, 1203 Off. Gaz. Pat. Office at 88 and 103 (responses to comments 64 and 109)(applicant obligated under 37 C.F.R. §10.18 to inquire into the underlying facts and circumstances when providing statements to the Patent and Trademark Office).

Specifically, the regulations at 37 C.F.R. §10.18 provide:

§ 10.18 Signature and certificate for correspondence filed in the Patent and Trademark Office.
(a) For all documents filed in the Office in patent, trademark, and other non-patent matters, except for correspondence that is required to be signed by the applicant or party, each piece of correspondence filed by a practitioner in the Patent and Trademark Office must bear a signature by such practitioner complying with the provisions of §1.4(d), §1.4(e), or § 2.193(c)(1) of this chapter.
(b) By presenting to the Office (whether by signing, filing, submitting, or later advocating) any paper, the party presenting such paper, whether a practitioner or non-practitioner, is certifying that—
(1) All statements made therein of the party's own knowledge are true, all statements made therein on information and belief are believed to be true, and all statements made therein are made with the knowledge that whoever, in any matter within the jurisdiction of the Patent and Trademark Office, knowingly and willfully falsifies, conceals, or covers up by any trick, scheme, or device a material fact, or makes any false, fictitious or fraudulent statements or representations, or makes or uses any false writing or document knowing the same to contain any false, fictitious or fraudulent statement or entry, shall be subject to the penalties set forth under 18 U.S.C. 1001, and that violations of this paragraph may jeopardize the validity of the application or document, or the validity or enforceability of any patent, trademark registration, or certificate resulting therefrom; and

STATUTES, REGULATIONS AND ANALYSIS

Congress has authorized the Commissioner to "revive an application if the delay is shown to the satisfaction of the Commissioner to have been "unavoidable." 35 U.S.C. §133 (1994).[3]

The regulations at 37 C.F.R. §1.137(a) and (b) set forth the requirements for a petitioner to revive a previously unavoidably or unintentionally, respectively, abandoned application under this congressional grant of authority. The language of 35 U.S.C. §133 and 37 C.F.R. §1.137(a) is clear, unambiguous, and without qualification: the delay in tendering the reply to the outstanding Office action, as well as filing the first petition seeking revival, must have been unavoidable for the reply now to be accepted on petition.[4]

Delays in responding properly raise the question whether delays are unavoidable.[5] Where there is a question whether the delay was unavoidable, Petitioners must meet the burden of establishing that the delay was unavoidable within the meaning of 35 U.S.C. §133 and 37 C.F.R. §1.137(a).[6]

---

(2) To the best of the party's knowledge, information and belief, formed after an inquiry reasonable under the circumstances, that —

(i) The paper is not being presented for any improper purpose, such as to harass someone or to cause unnecessary delay or needless increase in the cost of prosecution before the Office;

(ii) The claims and other legal contentions therein are warranted by existing law or by a nonfrivolous argument for the extension, modification, or reversal of existing law or the establishment of new law;

(iii) The allegations and other factual contentions have evidentiary support or, if specifically so identified, are likely to have evidentiary support after a reasonable opportunity for further investigation or discovery; and

(iv) The denials of factual contentions are warranted on the evidence, or if specifically so identified, are reasonably based on a lack of information or belief.

(c) Violations of paragraph (b)(1) of this section by a practitioner or non-practitioner may jeopardize the validity of the application or document, or the validity or enforceability of any patent, trademark registration, or certificate resulting therefrom. Violations of any of paragraphs (b)(2)(i) through (iv) of this section are, after notice and reasonable opportunity to respond, subject to such sanctions as deemed appropriate by the Commissioner, or the Commissioner's designee, which may include, but are not limited to, any combination of —

(1) Holding certain facts to have been established;

(2) Returning papers;

(3) Precluding a party from filing a paper, or presenting or contesting an issue;

(4) Imposing a monetary sanction;

(5) Requiring a terminal disclaimer for the period of the delay; or

(6) Terminating the proceedings in the Patent and Trademark Office.

(d) Any practitioner violating the provisions of this section may also be subject to disciplinary action. See § 10.23(c)(15).

[Added 50 FR 5175, Feb. 6, 1985, effective Mar. 8, 1985; para. (a) revised, 58 FR 54494, Oct. 22, 1993, effective Nov. 22, 1993; paras. (a) & (b) revised, paras. (c) & (d) added, 62 FR 53131, Oct. 10, 1997, effective Dec. 1, 1997; para. (a) revised, 69 FR 56481, Sept. 21, 2004, effective Oct. 21, 2004]

[3] 35 U.S.C. §133 provides:

35 U.S.C. §133 Time for prosecuting application.

Upon failure of the applicant to prosecute the application within six months after any action therein, of which notice has been given or mailed to the applicant, or within such shorter time, not less than thirty days, as fixed by the Commissioner in such action, the application shall be regarded as abandoned by the parties thereto, unless it be shown to the satisfaction of the Commissioner that such delay was unavoidable.

[4] Therefore, by example, an unavoidable delay in the payment of the Filing Fee might occur if a reply is shipped by the US Postal Service, but due to catastrophic accident, the delivery is not made.

[5] See: *Changes to Patent Practice and Procedure; Final Rule Notice*, 62 *Fed. Reg.* at 53158-59 (October 10, 1997), 1203 *Off. Gaz. Pat. Office* at 86-87 (October 21, 1997).

[6] See: In re Application of G, 11 USPQ2d 1378, 1380 (Comm'r Pats. 1989).

And the Petitioner must be diligent in attending to the matter.[7] Failure to do so does not constitute the care required under Pratt, and so cannot satisfy the test for diligence and due care.

(By contrast, unintentional delays are those that do not satisfy the very strict statutory and regulatory requirements of unavoidable delay, and also, by definition, are not intentional.[8]))

Allegations as to the Request to
Withdraw the Holding of Abandonment

The courts have determined the construct for properly supporting a petition seeking withdrawal of a holding of abandonment.[9]

The commentary at MPEP §711.03(c) provides:

* * *

> **B. Petition To Withdraw Holding of Abandonment Based on Evidence That a Reply Was Timely Mailed or Filed**
>
> 37 C.F.R. §1.10(c) through §1.10(e) and §1.10(g) set forth procedures for petitioning the Director of the USPTO to accord a filing date to correspondence as of the date of deposit of the correspondence as "Express Mail." A petition to withdraw the holding of abandonment relying upon a timely reply placed in "Express Mail" must include an appropriate petition under 37 C.F.R. §1.10(c), (d), * (e), or (g) (see MPEP § 513). When a paper is shown to have been mailed to the Office using the "Express Mail" procedures, the paper must be entered in PALM with the "Express Mail" date.
>
> Similarly, applicants may establish that a reply was filed with a postcard receipt that properly identifies the reply and provides *prima facie* evidence that the reply was timely filed. See MPEP § 503. For example, if the application has been held abandoned for failure to file a reply to a first Office action, and applicant has a postcard receipt showing that an amendment was timely filed in response to the Office action, then the holding of abandonment should be withdrawn upon the

---

[7] See: Diligence in Filing Petitions to Revive and Petitions to Withdraw the Holding of Abandonment, 1124 Off. Gaz. Pat. Office 33 (March 19, 1991). It was and is Petitioner's burden to exercise diligence in seeking either to have the holding of abandonment withdrawn or the application revived. See 1124 Off. Gaz. Pat. Office supra.

[8] Therefore, by example, an unintentional delay in the reply might occur if the reply and transmittal form are to be prepared for shipment by the US Postal Service, but other pressing matters distract one's attention and the mail is not timely deposited for shipment.

[9] See: Delgar v. Schulyer, 172 USPQ 513 (D.D.C. 1971).

filing of a petition to withdraw the holding of abandonment. When the reply is shown to have been timely filed based on a postcard receipt, the reply must be entered into PALM using the date of receipt of the reply as shown on the post card receipt.

Where a certificate of mailing under 37 C.F.R. §1.8, but not a postcard receipt, is relied upon in a petition to withdraw the holding of abandonment, see 37 C.F.R. §1.8(b) and MPEP § 512. As stated in 37 C.F.R §1.8(b)(3) the statement that attests to the previous timely mailing or transmission of the correspondence must be on a personal knowledge basis, or to the satisfaction of the Director of the USPTO. If the statement attesting to the previous timely mailing is not made by the person who signed the Certificate of Mailing (i.e., there is no personal knowledge basis), then the statement attesting to the previous timely mailing should include evidence that supports the conclusion that the correspondence was actually mailed (e.g., copies of a mailing log establishing that correspondence was mailed for that application). When the correspondence is shown to have been timely filed based on a certificate of mailing, the correspondence is entered into PALM with the actual date of receipt (i.e., the date that the duplicate copy of the papers was filed with the statement under 37 C.F.R. §1.8).

37 C.F.R. §1.8(b) also permits applicant to notify the Office of a previous mailing or transmission of correspondence and submit a statement under 37 C.F.R. 1.8(b)(3) accompanied by a duplicate copy of the correspondence when a reasonable amount of time (e.g., more than one month) has elapsed from the time of mailing or transmitting of the correspondence. Applicant does not have to wait until the application becomes abandoned before notifying the Office of the previous mailing or transmission of the correspondence. Applicant should check the private Patent Application Information Retrieval (PAIR) system for the status of the correspondence before notifying the Office. See MPEP § 512.

* * *

And the regulation requires that relief be sought within two (2) months of the act complained of.

Petitioner appears to have satisfied the showing requirement described above.

CONCLUSION

Because Petitioner appears to have carried his burden in the instant matter, the petition as considered under 37 C.F.R. §1.181 is **granted**, and the 4 December, 2006, Notice of Abandonment is **vacated**.

The application is released to Technology Center 3700 for further processing in due course.

While telephone inquiries regarding this decision may be directed to the undersigned at (571) 272-3214, it is noted that all practice before the Office is in writing (see: 37 C.F.R. §1.2[10]) and the proper authority for action on any matter in this regard are the statutes (35 U.S.C.), regulations (37 C.F.R.) and the commentary on policy (MPEP). Therefore, no telephone discussion may be controlling or considered authority for Petitioner's action(s).

John J. Gillon, Jr.
Senior Attorney
Office of Petitions

[10] The regulations at 37 C.F.R. §1.2 provide:

§1.2 Business to be transacted in writing.

All business with the Patent and Trademark Office should be transacted in writing. The personal attendance of applicants or their attorneys or agents at the Patent and Trademark Office is unnecessary. The action of the Patent and Trademark Office will be based exclusively on the written record in the Office. No attention will be paid to any alleged oral promise, stipulation, or understanding in relation to which there is disagreement or doubt.

UNITED STATES PATENT AND TRADEMARK OFFICE

Commissioner for Patents
United States Patent and Trademark Office
P.O. Box 1450
Alexandria, VA 22313-1450
www.uspto.gov

MCDONNELL BOEHNEN HULBERT & BERGHOFF LLP
300 S. WACKER DRIVE
32ND FLOOR
CHICAGO IL 60606

COPY MAILED

JUL 18 2008

OFFICE OF PETITIONS

In re Application of :
Allen C. Shoup et al :
Application No. 10/685,147 : DECISION ON PETITION
Filed: October 14, 2003 :
Attorney Docket No. 02-1008-A :

This is a decision on the petition under 37 CFR 1.182, filed December 14, 2007, to change the order of the names of the inventors.

The petition is **GRANTED**.

Office records have been corrected to reflect the change in the order of the named inventors. A corrected Filing Receipt, which sets forth the desired order of the named inventors, accompanies this decision on petition.

As authorized, the $400 fee for the petition under 37 CFR 1.182 has been assessed to petitioner's deposit account.

This application is being referred to the Office of Data Management to be processed into a patent.

Telephone inquiries regarding this decision should be directed to the undersigned at (571) 272-3208.

Karen Creasy
Petitions Examiner
Office of Petitions

ATTACHMENT: Corrected Filing Receipt

UNITED STATES PATENT AND TRADEMARK OFFICE

UNITED STATES DEPARTMENT OF COMMERCE
United States Patent and Trademark Office
Address: COMMISSIONER FOR PATENTS
P.O. Box 1450
Alexandria, Virginia 22313-1450
www.uspto.gov

APPLICATION NUMBER	FILING or 371(c) DATE	GRP ART UNIT	FIL FEE REC'D	ATTY.DOCKET.NO	TOT CLAIMS	IND CLAIMS
10/685,147	10/14/2003	3754	750	02-1008-A	19	2

CONFIRMATION NO. 4786

CORRECTED FILING RECEIPT

20306
MCDONNELL BOEHNEN HULBERT & BERGHOFF LLP
300 S. WACKER DRIVE
32ND FLOOR
CHICAGO, IL 60606

Date Mailed: 07/18/2008

Receipt is acknowledged of this non-provisional patent application. The application will be taken up for examination in due course. Applicant will be notified as to the results of the examination. Any correspondence concerning the application must include the following identification information: the U.S. APPLICATION NUMBER, FILING DATE, NAME OF APPLICANT, and TITLE OF INVENTION. Fees transmitted by check or draft are subject to collection. Please verify the accuracy of the data presented on this receipt. **If an error is noted on this Filing Receipt, please submit a written request for a Filing Receipt Correction. Please provide a copy of this Filing Receipt with the changes noted thereon. If you received a "Notice to File Missing Parts" for this application, please submit any corrections to this Filing Receipt with your reply to the Notice. When the USPTO processes the reply to the Notice, the USPTO will generate another Filing Receipt incorporating the requested corrections**

Applicant(s)

Allen C. Shoup, Seattle, WA;
Howard V. Leendersten, Seattle, WA;

Power of Attorney: The patent practitioners associated with Customer Number 20306

Domestic Priority data as claimed by applicant

This appln claims benefit of 60/418,993 10/15/2002

Foreign Applications

If Required, Foreign Filing License Granted: 01/14/2004

The country code and number of your priority application, to be used for filing abroad under the Paris Convention, is **US 10/685,147**

Projected Publication Date: Not Applicable

Non-Publication Request: No

Early Publication Request: No
**** SMALL ENTITY ****

Title

BOTTLE CLOSURE

Preliminary Class

215

PROTECTING YOUR INVENTION OUTSIDE THE UNITED STATES

Since the rights granted by a U.S. patent extend only throughout the territory of the United States and have no effect in a foreign country, an inventor who wishes patent protection in another country must apply for a patent in a specific country or in regional patent offices. Applicants may wish to consider the filing of an international application under the Patent Cooperation Treaty (PCT). An international (PCT) application generally has the same effect as a regular national patent application in each PCT-member country. The PCT process **simplifies** the filing of patent applications on the same invention in member countries, but **does not result** in a grant of "an international patent" and does not eliminate the need of applicants to file additional documents and fees in countries where patent protection is desired.

Almost every country has its own patent law, and a person desiring a patent in a particular country must make an application for patent in that country in accordance with its particular laws. Since the laws of many countries differ in various respects from the patent law of the United States, applicants are advised to seek guidance from specific foreign countries to ensure that patent rights are not lost prematurely.

Applicants also are advised that in the case of inventions made in the United States, the Director of the USPTO must issue a license before applicants can apply for a patent in a foreign country. The filing of a U.S. patent application serves as a request for a foreign filing license. The application's filing receipt contains further information and guidance as to the status of applicant's license for foreign filing.

Applicants may wish to consult the USPTO booklet, "General Information Concerning Patents" (specifically, the section entitled "Treaties and Foreign Patents") for more information on timeframes and deadlines for filing foreign patent applications. The guide is available either by contacting the USPTO Contact Center at 800-786-9199, or it can be viewed on the USPTO website at http://www.uspto.gov/web/offices/pac/doc/general/index.html.

For information on preventing theft of your intellectual property (patents, trademarks and copyrights), you may wish to consult the U.S. Government website, http://www.stopfakes.gov. Part of a Department of Commerce initiative, this website includes self-help "toolkits" giving innovators guidance on how to protect intellectual property in specific countries such as China, Korea and Mexico. For questions regarding patent enforcement issues, applicants may call the U.S. Government hotline at 1-866-999-HALT (1-866-999-4158).

LICENSE FOR FOREIGN FILING UNDER

Title 35, United States Code, Section 184

Title 37, Code of Federal Regulations, 5.11 & 5.15

GRANTED

The applicant has been granted a license under 35 U.S.C. 184, if the phrase "IF REQUIRED, FOREIGN FILING LICENSE GRANTED" followed by a date appears on this form. Such licenses are issued in all applications where the conditions for issuance of a license have been met, regardless of whether or not a license may be required as

set forth in 37 CFR 5.15. The scope and limitations of this license are set forth in 37 CFR 5.15(a) unless an earlier license has been issued under 37 CFR 5.15(b). The license is subject to revocation upon written notification. The date indicated is the effective date of the license, unless an earlier license of similar scope has been granted under 37 CFR 5.13 or 5.14.

This license is to be retained by the licensee and may be used at any time on or after the effective date thereof unless it is revoked. This license is automatically transferred to any related applications(s) filed under 37 CFR 1.53(d). This license is not retroactive.

The grant of a license does not in any way lessen the responsibility of a licensee for the security of the subject matter as imposed by any Government contract or the provisions of existing laws relating to espionage and the national security or the export of technical data. Licensees should apprise themselves of current regulations especially with respect to certain countries, of other agencies, particularly the Office of Defense Trade Controls, Department of State (with respect to Arms, Munitions and Implements of War (22 CFR 121-128)); the Bureau of Industry and Security, Department of Commerce (15 CFR parts 730-774); the Office of Foreign AssetsControl, Department of Treasury (31 CFR Parts 500+) and the Department of Energy.

NOT GRANTED

No license under 35 U.S.C. 184 has been granted at this time, if the phrase "IF REQUIRED, FOREIGN FILING LICENSE GRANTED" DOES NOT appear on this form. Applicant may still petition for a license under 37 CFR 5.12, if a license is desired before the expiration of 6 months from the filing date of the application. If 6 months has lapsed from the filing date of this application and the licensee has not received any indication of a secrecy order under 35 U.S.C. 181, the licensee may foreign file the application pursuant to 37 CFR 5.15(b).

UNITED STATES PATENT AND TRADEMARK OFFICE

Commissioner for Patents
United States Patent and Trademark Office
P.O. Box 1450
Alexandria, VA 22313-1450
www.uspto.gov

Elsa Keller
Siemens Corporation
Intellectual Property Department
170 Wood Avenue South
Iselin NJ 08830

COPY MAILED

AUG 3 0 2005

OFFICE OF PETITIONS

In re Application of :
MITTAL et al. :
Application No. 10/685,162 :
Filed: October 14, 2003 :
Attorney Docket No. 2002P17242US01 :

DECISION
ON PETITION

This is a decision on the petition under 37 CFR 1.137(b), filed August 1, 2005, to revive the above-identified application.

The petition is **GRANTED**.

The above-identified application became abandoned for failure to reply in a timely manner to a Notice to File Missing Parts of Nonprovisional Application mailed January 23, 2004, which set a period for reply of two (2) months. No extensions of time under the provisions of 37 CFR 1.136(a) were obtained. Accordingly, the application became abandoned on March 24, 2004.

The petition satisfies the conditions for revival pursuant to the provisions of 37 CFR 1.137(b) in that (1) the reply in the form of properly executed declarations and the late declaration surcharge fee of $130; (2) the petition fee of $1500; and (3) the required statement of unintentional delay have been received. Accordingly, the reply to the Notice to File Missing Parts of Nonprovisional Application of January 23, 2004 is accepted as having been unintentionally delayed.

The power of attorney in the declaration does not comply with 37 CFR 1.32(c)(3). More than ten registered patent attorneys or registered patent agents are included in the power of attorney. As such except for the patent practitioners previously appointed, no patent practitioners listed in the power of attorney will be made of record. See 37 CFR 1.32(c) and Federal Register, Vol. 69, No. 175, May 26, 2004, page 29867 (Revision of Power of Attorney and Assignment Practice).

Telephone inquiries concerning this decision should be directed to Denise Pothier at (571) 272-4787.

The application matter is being forwarded to Office of Initial Patent Examination.

Frances Hicks
Petitions Examiner
Office of Petitions

UNITED STATES PATENT AND TRADEMARK OFFICE

COMMISSIONER FOR PATENTS
UNITED STATES PATENT AND TRADEMARK OFFICE
P.O. BOX 1450
ALEXANDRIA, VA 22313-1450
www.uspto.gov

Paper No.

Wood, Herron & Evans, LLP
2700 Carew Tower
441 Vine Street
Cincinnati, OH 45202

COPY MAILED

JUN 2 4 2004

OFFICE OF PETITIONS

In re Application of :
Raghavan Rajagopalan, et al. :
Application No. 10/685,172 : ON PETITION
Filed: October 14, 2003 :
Attorney Docket No. MRD-62CP :

This is in response to the petition under 37 CFR 1.47(a), filed April 23, 2004.

The petition is granted.

Petitioner has shown that the non-signing inventor has refused to join in the filing of the above-identified application.

The above-identified application and papers have been reviewed and found in compliance with 37 CFR 1.47(a). This application is hereby accorded Rule 1.47(a) status.

As provided in 37 CFR 1.47(a), this Office will forward notice of this application's filing to the non-signing inventor at the address given in the petition. Notice of the filing of this application will also be published in the Official Gazette.

The application file is being forwarded to the Office of Initial Patent Examination for further processing.

Telephone inquiries regarding this decision should be directed to the undersigned at (703) 306-3475.

Marianne E. Morgan
Petitions Examiner
Office of Petitions
Office of the Deputy Commissioner
for Patent Examination Policy

SPE RESPONSE FOR CERTIFICATE OF CORRECTION

Paper No.: _____

DATE : 3/25/2010

TO SPE OF : ART UNIT 2117 (2100)

SUBJECT : Request for Certificate of Correction for Appl. No.: 10/685,177 Patent No.: 7,613,961

Please respond to this request for a certificate of correction within 7 days.

FOR IFW FILES:

Please review the requested changes/corrections as shown in the **COCIN** document(s) in the IFW application image. No new matter should be introduced, nor should the scope or meaning of the claims be changed.

Please complete the response (see below) and forward the completed response to scanning using document code **COCX**.

FOR PAPER FILES:

Please review the requested changes/corrections as shown in the attached certificate of correction. Please complete this form (see below) and forward it with the file to:

Certificates of Correction Branch (CofC)
Randolph Square – 9D10-A
Palm Location 7580

Ernest C. White, LPE
Randolph Sq. Ste 9D62A
703-756-1590

Thank You For Your Assistance

The request for issuing the above-identified correction(s) is hereby:

Note your decision on the appropriate box.

- ✓ **Approved** — **All** changes apply.
- ☐ **Approved in Part** — Specify below which changes **do not** apply.
- ☐ **Denied** — State the reasons for denial below.

_____

_____

_____

SPE /Kevin Ellis/ **ART UNIT** 2117

UNITED STATES PATENT AND TRADEMARK OFFICE

UNITED STATES DEPARTMENT OF COMMERCE
United States Patent and Trademark Office
Address: COMMISSIONER FOR PATENTS
P.O. Box 1450
Alexandria, Virginia 22313-1450
www.uspto.gov

INTERNATIONAL BUSINESS MACHINES CORPORATION
Richard Lau
IPLAW DEPARTMENT / Bldg 008-2
2455 SOUTH ROAD - MS P386
POUGHKEEPSIE, NY 12601

Mail Date: 04/20/2010

Applicant	: Jay R. Herring	: DECISION ON REQUEST FOR
Patent Number	: 7668923	: RECALCULATION of PATENT
Issue Date	: 02/23/2010	: TERM ADJUSTMENT IN VIEW
Appliction No	: 10/685,181	: OF WYETH AND NOTICE OF INTENT TO
Filed	: 10/14/2003	: ISSUE CERTIFICATE OF CORRECTION
		:

The Request for Recalculation is **GRANTED** to the extent indicated.

The patent term adjustment has been determined to be **1460** days. The USPTO will *sua sponte* issue a certificate of correction reflecting the amount of PTA days determined by the recalculation.

Prior to the issuance of the certificate of correction, the USPTO will afford patentee an opportunity to be heard and request reconsideration. Accordingly, patentee has **one month or thirty (30) days**, whichever is longer, to file a request for reconsideration of this patent term adjustment calculation. See 35 U.S.C. 154(b)(3)(B)(ii) and 37 CFR 1.322(a)(4). No extensions of time will be granted under 37 CFR 1.136.

Patentee should use document code PET.OP if electronically filing a request for reconsideration of this patent term adjustment calculation. The patentee must also include the information required by 37 CFR 1.705(b)(2) and the fee required by 37 CFR 1.18(e). If patentee does not file a timely request for reconsideration of this patent term adjustment calculation including the information required by 37 CFR 1.705(b)(2) and the fee required by 37 CFR 1.18(e), the USPTO will issue a certificate of correction reflecting the PTA determination noted above.

Patentee should be aware that in order to preserve the right to review in the United States District Court for the District of Columbia of the USPTO patent term adjustment determination, patentee must ensure that he or she also take the steps required under 35 U.S.C. 154(b)(4)(A) in a timely manner. Nothing in the request for recalculation should be construed as providing an alternative time frame for commencing a civil action under 35 U.S.C. 154(b)(4)(A).

Any questions concerning this decision should be directed to the Office of Patent Legal Administration at 571-272-7702.

UNITED STATES PATENT AND TRADEMARK OFFICE

COMMISSIONER FOR PATENTS
UNITED STATES PATENT AND TRADEMARK OFFICE
P.O. BOX 1450
ALEXANDRIA, VA 22313-1450
www.uspto.gov

CARSTENS YEE & CAHOON, LLP
P O BOX 802334
DALLAS TX 75380

COPY MAILED

APR 0 8 2004

OFFICE OF PETITIONS

In re Application of
Knoerzer, et al.
Application No. 10/685,186
Filed: October 14, 2003
Attorney Docket No. CFLAY.00193
For: FLEXIBLE FILM PACKAGING HAVING REMOVABLE STRIP

: DECISION ON
: PETITION

This is a decision on the petition filed February 6, 2004 (certificate of mailing date February 2, 2004) requesting that Figures 9a and 9b be accorded a filing date of October 14, 2003. The petition will be treated under 37 CFR 1.53(e).

The application was filed on October 14, 2003. On January 21, 2004, the Office of Initial Patent Examination mailed a "Notice of Omitted Item(s) in a Nonprovisional Application" informing petitioners that Figures 9a and 9b, as described in the specification, appeared to have been omitted.

Petitioners request that Figures 9a and 9b be accorded a filing date of October 14, 2003 on the basis that 7 pages of formal drawing figures, including Figures 9a and 9b, were received in the Patent and Trademark Office (PTO) on October 14, 2003. In support, the instant petition is accompanied by a copy of applicants' itemized postcard receipt showing an Office of Initial Patent Examination generated barcode citing October 14, 2003 as the date of receipt. The postcard lists, *inter alia*, that the filing included 7 pages of formal drawings.

The return postcard constitutes *prima facie* evidence that 7 pages of formal drawing figures were filed on October 14, 2003. MPEP 503. A review of the application file reveals that there are 6 pages of drawing figures present.

Accordingly, the petition under 37 CFR 1.53(e) is **GRANTED**. Pursuant to petitioners' authorization, deposit account no. 50-0392 will be credited the $130.00 fee submitted with the instant petition.

The application is being returned to Office of Initial Patent Examination for further processing, with a filing date of **October 14, 2003**, using the copy of Figures 9a and 9b submitted with the instant petition. Office records will be corrected to show that 7 pages of drawings were present

on initial filing.

Any inquiries pertaining to this matter may be directed to the undersigned at (703) 308-6712.

E. Shirene Willis

E. Shirene Willis
Senior Petitions Attorney
Office of Petitions

UNITED STATES PATENT AND TRADEMARK OFFICE

Commissioner for Patents
United States Patent and Trademark Office
P.O. Box 1450
Alexandria, VA 22313-1450
www.uspto.gov

SCHIFF HARDIN
PATENT DEPARTMENT
6600 SEARS TOWER
CHICAGO, IL 60606-6473

COPY MAILED

APR 27 2005

OFFICE OF PETITIONS

In re Application of :
Hans Winter et al :
Application No. 10/685,227 : ON PETITION
Filed: October 14, 2003 :
Attorney Docket No. P03,0418 :

This is a decision on the petition under 37 CFR 1.313(c), filed April 26, 2005, which is being treated under 37 CFR 1.313(c)(3) to withdraw the above-identified application from issue after payment of the issue fee.

The petition is **GRANTED**.

The above-identified application is withdrawn from issue for express abandonment. See 37 CFR 1.313(c)(3). The above-identified application is expressly abandoned in favor of a continuing application No. 11/079,732.

Petitioner is advised that difference matters are handled by different branches of the Office, each distinct subject, inquiry or order must be contained in a separate paper to avoid confusion and delay in answering papers dealing with different subjects. *Note* 37 CFR 1.4(c).

The application is hereby withdrawn from issue, and the abandonment is hereby recognized.

Telephone inquiries should be directed to Wan Laymon at (571) 272-3220.

This matter is being referred to Files Repository.

Wan Laymon
Petitions Examiner
Office of Petitions
Office of the Deputy Commissioner
for Patent Examination Policy

UNITED STATES PATENT AND TRADEMARK OFFICE

COMMISSIONER FOR PATENTS
UNITED STATES PATENT AND TRADEMARK OFFICE
P.O. BOX 1450
ALEXANDRIA, VA 22313-1450

www.uspto.gov

Date : April 27, 2005

TO : Director, Office of Patent Publication

FROM : Office of the Deputy Commissioner
for Patent Examination Policy

SUBJECT : Withdrawal from Issue of

Applicant(s) : Hans Winter et al
Application No. : 10/685,227
Filed : October 14, 2003

The above-identified application has been assigned Patent No. 6,886,465 and an issue date of May 3, 2005.

It is hereby directed that this application be withdrawn from issue at the request of the applicants. Do not refund the issue fee.

The following erratum should be published in the Official Gazette if the above-identified application is published in the OG of May 3, 2005:

"All reference to Patent No. 6,886,465 to Hans Winter et al of Munchen, GERMANY for DEVICE AND METHOD FOR CONTROLLING THE POSITION OF THE LATERAL EDGE OF A CONTINUOUS WEB appearing in the Official Gazette of May 3, 2005 should be deleted since no patent was granted."

Wan Laymon

Wan Laymon
Petitions Examiner
Office of Petitions
Office of the Deputy Commissioner
for Patent Examination Policy

cc: Paul Harrison; Crystal Park 3, Suite 441 (FAX-703-306-2737)
Deneise Boyd, Crystal Park 2, Suite 1100 (FAX-308-5413)
Mary Louise McAskill, Crystal Park 3-910 (FAX 305-4372)
Niomi Farmer, Crystal Park 3-910 (FAX-305-4372)
Mary E. Johnson (Cookie), P/OCS, CM1-6D07
Duane Davis (CDS), CM1-6A07
Tamara K. Greene, PK3-910

UNITED STATES PATENT AND TRADEMARK OFFICE

COMMISSIONER FOR PATENTS
UNITED STATES PATENT AND TRADEMARK OFFICE
P.O. BOX 1450
ALEXANDRIA, VA 22313-1450
www.uspto.gov

KINNEY & LANGE, P.A.
THE KINNEY & LANGE BUILDING
312 SOUTH THIRD STREET
MINNEAPOLIS, MN 55415-1002

COPY MAILED

MAR 16 2005

OFFICE OF PETITIONS

ON PETITION

In re Application of :
Leroy Braun, et al. :
Application No. 10/685,240 :
Filed: October 14, 2003 :
Attorney Docket No. M33.12-0024 :

This is a decision on the petition, filed March 16, 2005, under 37 CFR 1.313(c)(2) to withdraw the above-identified application from issue after payment of the issue fee.

The petition is **GRANTED**.

The above-identified application is withdrawn from issue for consideration of a submission under 37 CFR 1.114 (request for continued examination). See 37 CFR 1.313(c)(2).

Petitioner is advised that the issue fee paid on November 12, 2004, in the above-identified application cannot be refunded. If, however, the above-identified application is again allowed, petitioner may request that it be applied towards the issue fee required by the new Notice of Allowance. [1]

Telephone inquiries relating to this decision should be directed to the undersigned at (571) 272-3204.

The application is being referred to Technology Center AU 2856 for further processing of the request for continued examination under 37 CFR 1.114.

Sherry D. Brinkley
Petitions Examiner
Office of Petitions
Office of the Deputy Commissioner
for Patent Examination Policy

[1]The request to apply the issue fee to the new Notice may be satisfied by completing and returning the new Issue Fee Transmittal Form PTOL-85(b), which includes the following language thereon: "Commissioner for Patents is requested to apply the Issue Fee and Publication Fee (if any) or re-apply any previously paid issue fee to the application identified above." Petitioner is advised that, whether a fee is indicated as being due or not, the Issue Fee Transmittal Form **must** be completed and timely submitted to avoid abandonment. Note the language in bold text on the first page of the Notice of Allowance and Fee(s) Due (PTOL-85).

UNITED STATES PATENT AND TRADEMARK OFFICE

Commissioner for Patents
United States Patent and Trademark Office
P.O. Box 1450
Alexandria, VA 22313-1450
www.uspto.gov

JOHN R. ROSS
TREX ENTERPRISES
10455 PACIFIC CENTER CT.
SAN DIEGO CA 92121

COPY MAILED
OCT 19 2006
OFFICE OF PETITIONS

In re Application of :
Belenkii et al. :
Application No. 10/685,244 : DECISION ON PETITION
Filed: 10/14/2003 :
Attorney Docket No. 496 :

This is a decision on the petition under 37 CFR 1.137(b), filed March 20, 2006, to revive the above-identified application.

This application became abandoned for failure to reply timely to the nonfinal Office Action mailed August 24, 2005, which set a three (3) month shortened statutory period to reply. Accordingly, this application became abandoned on November 25, 2005. A Notice of Abandonment was mailed on September 28, 2006.

Petitioner has met the requirements to revive the above-identified application pursuant to 37 CFR 1.137(b). Accordingly, the petition is **granted.**

This matter is being referred to Technology Center Art Unit 3662.

Telephone inquiries should be directed to the undersigned at (571) 272-3211.

C. T. Donnell

Christina Tartera Donnell
Senior Petitions Attorney
Office of Petitions

UNITED STATES PATENT AND TRADEMARK OFFICE

Commissioner for Patents
United States Patent and Trademark Office
P.O. Box 1450
Alexandria, VA 22313-1450
www.uspto.gov

PHILIPS INTELLECTUAL PROPERTY & STANDARDS
P.O. BOX 3001
BRIARCLIFF MANOR, NY 10510

COPY MAILED

DEC 09 2009

OFFICE OF PETITIONS

In re Application of :
Jan Van Der Meer, et al. :
Application No. 10/685,245 : ON PETITION
Filed: October 14, 2003 :
Attorney Docket No. PHN15156USA :

This is a decision on the petition, filed October 6, 2009, to revive the above-identified application under the provisions of 37 CFR 1.137(b).

The petition is **GRANTED**.

This application became abandoned for failure to submit corrected formal drawings on or before August 20, 2009 as required by the Notice of Allowability mailed May 20, 2009. A Notice of Abandonment was mailed on September 15, 2009. In response, on October 6, 2009, the present petition was filed.

The petition satisfies the requirements of 37 CFR 1.137(b) in that petitioner has supplied (1) the reply in the form of corrected formal drawings, (2) the petition fee of $1,620; and (3) an adequate statement of unintentional delay.

The application is being referred to the Office of Publications to oversee the review of the drawing filed October 6, 2009 and for processing into a patent.

Telephone inquires related to this decision may be directed to the undersigned at (571) 272-3204. Status inquires related to processing at Publishing Division should be directed to (571) 272-4200.

Sherry D. Brinkley
Petitions Examiner
Office of Petitions

UNITED STATES PATENT AND TRADEMARK OFFICE

Commissioner for Patents
United States Patent and Trademark Office
P.O. Box 1450
Alexandria, VA 22313-1450
www.uspto.gov

IP GROUP OF DLA PIPER LLP (US)
ONE LIBERTY PLACE
1650 MARKET ST, SUITE 4900
PHILADELPHIA PA 19103

COPY MAILED

SEP 14 2009

OFFICE OF PETITIONS

In re Application of	:	
Yijun Ye	:	DECISION ON PETITION
Application No. 10/685,263	:	TO WITHDRAW
Filed: October 14, 2003	:	FROM RECORD
Attorney Docket No. 584642001200	:	

This is a decision on the Request to Withdraw as attorney or agent of record under 37 C.F.R. § 1.36(b), filed January 7, 2005.

The request is **NOT APPROVED** because it is moot.

A review of the file record indicates that on August 25, 2009 the power of attorney was revoked by the assignee of the patent application. Accordingly, the request to withdraw under 37 C.F.R. § 1.36(b) is moot.

All future communications from the Office will be directed to the below-listed address until otherwise notified by applicant.

Telephone inquires concerning this decision should be directed to the undersigned at 571-272-7751. All other inquires concerning either the examination or status of the application should be directed to the Technology Center.

Joan Olszewski
Petitions Examiner
Office of Petitions

cc: Morrison & Foerster LLP
1650 Tysons Boulevard
Suite 400
McLean VA 22102

UNITED STATES PATENT AND TRADEMARK OFFICE

Commissioner for Patents
United States Patent and Trademark Office
P.O. Box 1450
Alexandria, VA 22313-1450
www.uspto.gov

AGILENT TECHNOLOGIES, INC.
LEGAL DEPARTMENT, DL 429
INTELLECTUAL PROPERTY ADMINISTRATION
P.O. BOX 7599
LOVELAND CO 80537-0599

COPY MAILED

AUG 0 1 2005

OFFICE OF PETITIONS

In re Application of	:
Mikes and Xing	: DECISION REFUSING STATUS
Application No. 10/685,270	: UNDER 37 CFR 1.47(a)
Filed: 14 October, 2003	:
Atty Docket No. 10004278-1	:

This is in response to the petition under 37 CFR 1.47(a) filed on 14 October, 2003.

The Office apologizes for the delay in responding to the present petition and regrets any inconvenience to petitioners.

The petition is **DISMISSED**.

Rule 47 applicant is given TWO MONTHS from the mailing date of this decision to reply, correcting the below-noted deficiencies. Any reply should be entitled "Request for Reconsideration of Petition Under 37 CFR 1.47(a)," and should only address the deficiencies noted below, except that the reply may include an oath or declaration executed by the non-signing inventor. **FAILURE TO RESPOND WILL RESULT IN ABANDONMENT OF THE APPLICATION.** Extensions of time may be obtained in accordance with 37 CFR 1.136(a).

The above-identified application was filed on 14 October, 2003, with a declaration naming Thomas L. Mikes and Lian Xing as joint inventors and signed by joint inventor Xing on behalf of himself and non-signing joint inventor Mikes. The present petition was also filed with the application.

Petitioners state that despite attempts to contact the non-signing inventor by E-mail and telephone, the non-signing inventor could not be reached to sign the declaration.

A grantable petition under 37 CFR 1.47(a) requires:

(1) proof that the non-signing inventor cannot be reached or located, notwithstanding diligent effort, or refuses to sign the oath or declaration after having been presented with the application papers (specification, claims and drawings);

(2) an acceptable oath or declaration in compliance with 35 U.S.C. §§ 115 and 116;

(3) the petition fee;

(4) a surcharge of $130 or $65 (small entity) if the petition and/or declaration is not filed at the time of filing the application, and

(5) a statement of the last known address of the non-signing inventor.

The petition lacks items (1) and (2).

In regards to item (1), petitioners have not shown that joint inventor Mikes was sent or presented with a copy of the application as filed (specification, including claims, drawings, if any, and the declaration).[1] Based on the showing of record, it does not appear that the specification, including claims, and the drawings, were among the application papers sent to the non-signing inventor.

Petitioners may show proof that a copy of the application was sent or given to the non-signing inventor for review by providing a copy of the cover letter transmitting the application papers (specification, including claims, drawings, if any, and the declaration) to the non-signing inventor or details given in an affidavit or declaration of facts by a person having first-hand knowledge of the details.

Likewise, before a *bona fide* refusal to sign the declaration can be alleged, petitioners must show that a copy of the application was sent or given to the inventor. If the inventor refuses in writing, petitioners must submit a copy of that written refusal with any renewed petition. If the refusal was made orally to a person, then that person must provide details of the refusal in an affidavit or declaration of fact.

---

[1] MPEP 409.03(d).

With regards to item (2) the declaration is defective in that it does not state the residence, mailing address, or citizenship of non-signing inventor Mikes.[2] A statement of the inventor's citizenship is a statutory requirement and cannot be waived.[3] A new oath or declaration, containing the residence, mailing address, and citizenship of both inventors, signed by the signing inventor on behalf of himself and the non-signing inventor in compliance with 37 CFR 1.63 and 1.67 is required.

Petitioners are reminded that any oath or declaration filed with a renewed petition must identify both the application number and filing date of the application.

Further correspondence with respect to this matter should be addressed as follows:

By mail: Mail Stop Petition
Commissioner for Patents
P.O. Box 1450
Alexandria, VA 22313-1450

By FAX: (571) 273-8300
Attn: Office of Petitions

By hand: Customer Service Window
Mail Stop Petition
Randolph Building
401 Dulany Street
Alexandria, VA 22314

Telephone inquiries related to this decision should be directed to the undersigned at 571-272-3231.

D Wood

Douglas I. Wood
Senior Petitions Attorney
Office of Petitions

---

[2] MPEP 605.01.

[3] 35 U.S.C. § 115, MPEP 605.01.

UNITED STATES PATENT AND TRADEMARK OFFICE

Commissioner for Patents
United States Patent and Trademark Office
P.O. Box 1450
Alexandria, VA 22313-1450
www.uspto.gov
DIW Sep-05

AGILENT TECHNOLOGIES, INC.
LEGAL DEPARTMENT, DL 429
INTELLECTUAL PROPERTY ADMINISTRATION
P.O. BOX 7599
LOVELAND CO 80537-0599

COPY MAILED

SEP 0 7 2005

OFFICE OF PETITIONS

In re Application of	:	
Mikes and Xing	:	DECISION NOTING JOINDER OF
Application No. 10/685,270	:	INVENTOR AND PETITION
Filed: 14 October, 2003	:	UNDER 37 CFR 1.47(a) MOOT
Atty Docket No. 10004278-1	:	

Papers filed on 18 August, 2005, in response to the decision dismissing petition mailed on 1 August, 2005, included a Declaration signed by the previously non-signing inventor, Thomas L. Mikes, in compliance with 37 CFR 1.63.

In view of the joinder of the inventor, further consideration under 37 CFR 1.47(a) is moot; this application does not have any rule 1.47(a) status and no such status should appear on the file wrapper. This application need not be returned to this office for any further consideration under 37 CFR 1.47(a).

The address listed on the petition filed on 18 August, 2005, is different than the correspondence address of record. A courtesy copy of this decision is being mailed to the address noted on the petition. However, until otherwise instructed, all future correspondence regarding this application will be mailed solely to the address of record.

This application will be referred to Technology Center Art Unit 2883 for further processing.

Telephone inquiries related to this decision should be directed to the undersigned at (571) 272-3231.

Douglas I. Wood
Senior Petitions Attorney
Office of Petitions

cc: Agilent Technologies, Inc.
3500 Deer Creek Blvd.
MS 26U-25
Palo Alto CA 94304-1317

UNITED STATES PATENT AND TRADEMARK OFFICE

Commissioner for Patents
United States Patent and Trademark Office
P.O. Box 1450
Alexandria, VA 22313-1450
www.uspto.gov

Robert A. Brown
P.O. Box 2127
Northbrook, IL 60065-2127

COPY MAILED

AUG 16 2006

OFFICE OF PETITIONS

In re Application of :
Albert Leo Schmidt :
Application No. 10/685,274 : DECISION ON PETITION
Filed: October 14, 2003 : TO MAKE SPECIAL UNDER
Attorney Docket No. ST-0107-D : 37 CFR 1.102(c)(1)
:

This is a decision on the petition under 37 CFR 1.102(c)(1), filed December 15, 2003, to make the above-identified application special based on applicant's age as set forth in M.P.E.P. § 708.02, Section IV.

The petition is **GRANTED**.

A grantable petition to make an application special under 37 CFR 1.102(c)(1) and MPEP § 708.02, Section IV: Applicant's Age, must be accompanied by evidence showing that at least one of the applicants is 65 years of age, or more, such as a birth certificate or a statement by applicant. No fee is required.

The instant petition (Declaration) includes a statement from applicant Albert Leo Schmidt, stating that he is over 65 years of age. Accordingly, the above-identified application has been accorded "special" status.

Telephone inquiries concerning this decision should be directed to Terri Williams at 571-272-2991.

All other inquiries concerning either the examination or status of the application should be directed to the Technology Center.

The application is being forwarded to the Technology Center Art Unit 3752 for action on the merits commensurate with this decision.

David Bucci
Petitions Examiner
Office of Petitions

UNITED STATES PATENT AND TRADEMARK OFFICE

UNITED STATES DEPARTMENT OF COMMERCE
United States Patent and Trademark Office
Address: COMMISSIONER FOR PATENTS
P.O. Box 1450
Alexandria, Virginia 22313-1450
www.uspto.gov

FISH & RICHARDSON, P.C.
PO BOX 1022
MINNEAPOLIS, MN 55440-1022

Mail Date: 04/20/2010

Applicant	: Markus Lauff	: DECISION ON REQUEST FOR
Patent Number	: 7669146	: RECALCULATION of PATENT
Issue Date	: 02/23/2010	: TERM ADJUSTMENT IN VIEW
Appliction No	: 10/685,285	: OF WYETH
Filed	: 10/14/2003	:
		:

The Patentee's Request for Recalculation is **DISMISSED.**

This Request is deemed ineligible for consideration for one or more of the following reasons:

(A). The patent for which PTA recalculation is requested is either a design or reissue application or is a reexamination proceeding;

(B). The patent for which PTA recalculation is requested resulted from a utility or plant application filed under 35 USC 111(a) before May 29, 2000 and no CPA filed in the application on/after May 29, 2000;

(C). The patent for which PTA recalculation is requested resulted from an international application in which the international filing date was before May 29, 2000 and no CPA filed in the application on/after May 29, 2000;

(D). The patent for which PTA recalculation is requested issued on/after March 2, 2010;

(E). The Request for Recalculation was filed more than 180 days after the grant date of the patent and the request was not filed within two months of a dismissal of a request for reconsideration of the of the patent term under 37 CFR 1.705(d);

(F). The Request for Recalculation is not solely limited to USPTO pre-Wyeth interpretation of 35 U.S.C. 154(b)(2)(A);

or

(G). A civil action was filed pursuant to 35 U.S.C. 154(b)(4)(A)concerning the same patent at issue in this request.

Patentee may file a reply to this decision dismissing the Request for Recalculation. Patentee must file such reply within one month or thirty days, whichever is longer, of the mail date of the decision dismissing the Request for Recalculation. No fee is required if patentee is asserting in the reply that the dismissal for ineligibility is improper.

Patentee should use document code PET.OP if electronically filing a reply to this dismissal. If the USPTO finds that the request was improperly deemed ineligible, the USPTO will mail applicant a recalculation determination.

Patentee should be aware that in order to preserve the right to review in the United States District Court for the District of Columbia of the USPTO patent term adjustment determination, patentee must ensure that he or she also take the steps required under 35 U.S.C. 154(b)(4)(A). Nothing in the request for recalculation should be construed as providing an alternative time frame for commencing a civil action under 35 U.S.C. 154 (b)(4)(A).

Any questions concerning this decision should be directed to the Office of Patent Legal Administration at 571-272-7702.

UNITED STATES PATENT AND TRADEMARK OFFICE

Commissioner for Patents
United States Patent and Trademark Office
P.O. Box 1450
Alexandria, VA 22313-1450
www.uspto.gov

YOUNG LAW FIRM, P.C.
ALAN W. YOUNG
4370 ALPINE ROAD
SUITE 106
PORTOLA VALLEY CA 94028

COPY MAILED

SEP 0 7 2006

OFFICE OF PETITIONS

In re Application of	:	
Derek J. Harper	:	
Application No. 10/685,291	:	DECISION ON PETITION
Filed: January 17, 2003	:	TO WITHDRAW
Attorney Docket No. MICR5701CON	:	FROM RECORD
	:	

This is a decision on the Request to Withdraw as attorney or agent of record under 37 C.F.R. § 1.36(b), filed January 12, 2006.

The request is **NOT APPROVED**.

A grantable request to withdraw as attorney/agent of record must be signed by every attorney/agent seeking to withdraw or contain a clear indication that one attorney is signing on behalf of another/others. A request to withdraw will not be approved unless at least 30 (thirty) days would remain between the date of approval and the later of the expiration date of a time to file a response or the expiration date of the maximum time period which can be extended under 37 C.F.R. § 1.136(a).

The Office cannot approve the request at this time since the reasons provided do not meet any of the conditions under the mandatory or permissive categories enumerated in 37 CFR 10.40. Section 10.40 of Title 37 of the Code of Federal Regulation states, "[a] practitioner shall not withdraw from employment in a proceeding before the Office without permission from the Office[.]" More specifically, 37 CFR 10.40 states, "[i]f paragraph (b) of this section is not applicable, a practitioner may not request permission to withdraw in matter pending before the Office unless such request or such withdrawal is" for one the permissive reasons listed in 37 CFR 10.40(c). The reasons set forth in the request, No longer represent the interest of this client, do not meet any the conditions set forth in 37 CFR 10.40.

All future communications from the Office will continue to be directed to the above-listed address until otherwise notified by applicant.

Telephone inquiries concerning this decision should be directed to Charles Smoot at 571-272-3299.

David Bucci
Petitions Examiner
Office of Petitions

cc: Derek J. Harper
6856 Buttonwood Lane
Goleta, CA 93117

UNITED STATES PATENT AND TRADEMARK OFFICE

Commissioner for Patents
United States Patent and Trademark Office
P.O. Box 1450
Alexandria, VA 22313-1450
www.uspto.go

SEED INTELLECTUAL PROPERTY LAW GROUP PLLC
701 FIFTH AVENUE, SUITE 6300
SEATTLE WA 98104-7092

COPY MAILED

AUG 2 0 2004

OFFICE OF PETITIONS

In re Application of	:	
Calarco et al.	:	
Application No. 10/685,292	:	DECISION ACCORDING STATUS
Filed: October 14, 2003	:	UNDER 37 CFR 1.47(a)
Attorney Docket No. 854063.736	:	

This is in response to the petition under 37 CFR 1.47(a), filed July 15, 2004. Applicant obtained a four-month extension of time. Therefore, the petition was timely filed.

The petition is granted.

Applicant has shown that Giuseppe Calarco, the non-signing inventor, has refused to join in the filing of the above-identified application after having been presented with the application papers. Additionally, applicant has established that non-signing inventors, Guy Formica and Stephane Gervais-Ducouret, cannot be located after diligent efforts were made to obtain their signatures on the declaration.

The above-identified application and papers have been reviewed and found in compliance with 37 CFR 1.47(a). This application is hereby accorded Rule 1.47(a) status.

As provided in Rule 1.47(c), this Office will forward notice of this application's filing to the non-signing inventors at the addresses given in the present petition. Notice of the filing of this application will also be published in the Official Gazette.

The matter is being referred to Technology Center 2600 for examination in due course.

Telephone inquiries regarding this decision should be directed to the undersigned at (703) 306-5589.

Christina Tartera Donnell

Christina Tartera Donnell
Senior Petitions Attorney
Office of Petitions

UNITED STATES PATENT AND TRADEMARK OFFICE

Commissioner for Patents
United States Patent and Trademark Office
P.O. Box 1450
Alexandria, VA 22313-1450
www.uspto.go

Giuseppe Calarco
51 Namly Crescent
Singapore, Singapore

COPY MAILED

AUG 2 0 2004

OFFICE OF PETITIONS

In re Application of	:	
Calarco et al.	:	
Application No. 10/685,292	:	LETTER
Filed: October 14, 2003	:	
Attorney Docket No. 854063.736	:	

Dear Mr. Calarco:

You are named as a joint inventor in the above-identified United States patent application filed under the provisions of 35 U.S.C. 116 (United States Code) and 37 CFR 1.47(a), Rules of Practice in Patent Cases. Should a patent be granted on the application you will be designated therein as a joint inventor. As a named inventor you are entitled to inspect any paper in the file wrapper of the application, order copies of all or any part thereof (at a prepaid cost per 37 CFR 1.19) or make your position of record in the application. Alternatively, you may arrange to do any of the preceding through a registered patent attorney or agent presenting written authorization from you. If you care to join the application, counsel of record (see below) would presumably assist you. Joining in the application would entail the filing of an appropriate oath or declaration by you pursuant to 37 CFR 1.63.

Requests for information regarding your application should be directed to the File Information Unit at (703) 308-2733. Information regarding how to pay for and order a copy of the application, or a specific paper in the application, should be directed to Certification Division at (703) 308-9726 or 1-800-972-6382 (outside the Washington D.C. area).

Christina L. Donnell

Christina Tartera Donnell
Senior Petitions Attorney
Office of Petitions

SEED INTELLECTUAL PROPERTY LAW GROUP PLLC
701 FIFTH AVENUE, SUITE 6300
SEATTLE WA 98104-7092

UNITED STATES PATENT AND TRADEMARK OFFICE

Commissioner for Patents
United States Patent and Trademark Office
P.O. Box 1450
Alexandria, VA 22313-1450
www.uspto.gov

Guy Formica
987 Bukit Timah Road
#01-18 Felicium Court
Maple Woods, Singapore
Singapore 58962 AIR MAIL

COPY MAILED

AUG 2 0 2004

OFFICE OF PETITIONS

In re Application of :
Calarco et al. :
Application No. 10/685,292 : LETTER
Filed: October 14, 2003 :
Attorney Docket No. 854063.736 :

Dear Mr. Formica:

You are named as a joint inventor in the above-identified United States patent application filed under the provisions of 35 U.S.C. 116 (United States Code) and 37 CFR 1.47(a), Rules of Practice in Patent Cases. Should a patent be granted on the application you will be designated therein as a joint inventor. As a named inventor you are entitled to inspect any paper in the file wrapper of the application, order copies of all or any part thereof (at a prepaid cost per 37 CFR 1.19) or make your position of record in the application. Alternatively, you may arrange to do any of the preceding through a registered patent attorney or agent presenting written authorization from you. If you care to join the application, counsel of record (see below) would presumably assist you. Joining in the application would entail the filing of an appropriate oath or declaration by you pursuant to 37 CFR 1.63.

Requests for information regarding your application should be directed to the File Information Unit at (703) 308-2733. Information regarding how to pay for and order a copy of the application, or a specific paper in the application, should be directed to Certification Division at (703) 308-9726 or 1-800-972-6382 (outside the Washington D.C. area).

Christina Tartera Donnell

Christina Tartera Donnell
Senior Petitions Attorney
Office of Petitions

SEED INTELLECTUAL PROPERTY LAW GROUP PLLC
701 FIFTH AVENUE, SUITE 6300
SEATTLE WA 98104-7092

UNITED STATES PATENT AND TRADEMARK OFFICE

Commissioner for Patents
United States Patent and Trademark Office
P.O. Box 1450
Alexandria, VA 22313-1450
www.uspto.gov

Stephane Gervais-Ducouret
263 River Valley Road
#01-16 Aspen Heights
Singapore, Singapore 238309 AIR MAIL

COPY MAILED

AUG 2 0 2004

OFFICE OF PETITIONS

In re Application of :
Calarco et al. :
Application No. 10/685,292 : LETTER
Filed: October 14, 2003 :
Attorney Docket No. 854063.736 :

Dear Mr. Gervais-Ducouret:

You are named as a joint inventor in the above-identified United States patent application filed under the provisions of 35 U.S.C. 116 (United States Code) and 37 CFR 1.47(a), Rules of Practice in Patent Cases. Should a patent be granted on the application you will be designated therein as a joint inventor. As a named inventor you are entitled to inspect any paper in the file wrapper of the application, order copies of all or any part thereof (at a prepaid cost per 37 CFR 1.19) or make your position of record in the application. Alternatively, you may arrange to do any of the preceding through a registered patent attorney or agent presenting written authorization from you. If you care to join the application, counsel of record (see below) would presumably assist you. Joining in the application would entail the filing of an appropriate oath or declaration by you pursuant to 37 CFR 1.63.

Requests for information regarding your application should be directed to the File Information Unit at (703) 308-2733. Information regarding how to pay for and order a copy of the application, or a specific paper in the application, should be directed to Certification Division at (703) 308-9726 or 1-800-972-6382 (outside the Washington D.C. area).

Christina Tartera Donnell

Christina Tartera Donnell
Senior Petitions Attorney
Office of Petitions

SEED INTELLECTUAL PROPERTY LAW GROUP PLLC
701 FIFTH AVENUE, SUITE 6300
SEATTLE WA 98104-7092

UNITED STATES PATENT AND TRADEMARK OFFICE

Commissioner for Patents
United States Patent and Trademark Office
P.O. Box 1450
Alexandria, VA 22313-1450
www.uspto.gov

MACCORD MASON PLLC
300 N. GREENE STREET, SUITE 1600
P.O. BOX 2974
GREENSBORO, NC 27402

COPY MAILED

SEP 0 6 2006

OFFICE OF PETITIONS

In re Application of
John P. Barnes et al.
Application No. 10/685,302
Filed: October 14, 2003
Attorney Docket No. 012474-0138

DECISION REFUSING STATUS
UNDER 37 CFR 1.47(a)

This decision is in response to the petition filed August 23, 2004, under 37 CFR 1.47(a), in response to the Notice to File Missing Parts "Notice" mailed January 16, 2004.

The petition is **DISMISSED**.

Rule 47 applicant is given TWO MONTHS from the mailing date of this decision to respond, correcting the below-noted deficiencies. Any response should be entitled "Request for Reconsideration of Petition Under 37 CFR 1.47(a)" and may include an oath or declaration executed by the inventor. **Failure to respond will result in abandonment of the application.** Any extensions of time will be governed by 37 CFR 1.136(a).

The above-identified application was filed on October 14, 2003 but without a signed declaration. Accordingly, on January 16, 2004, a "Notice To File Missing Parts of Application" was mailed, requiring *inter alia* a properly executed oath or declaration.

In response, the present petition was filed with a request for a five month extension of time and the oath and declaration signed by all inventors except joint inventor Lei Zhang. Petitioners seek status under 37 CFR 1.47(a) based on the fact that joint inventor Zhang has not provided them with an address to which the application could be mailed. Further, petitioners argue that the non-signing inventor has declined any claims to inventorship in this matter.

A grantable petition under 37 CFR 1.47(a) requires:

(1) proof that the non-signing inventor cannot be reached or refuses to sign the oath or declaration after having been presented with the application papers (specification, claims and drawings);

(2) an acceptable oath or declaration in compliance with 35 U.S.C. §§ 115 and 116;

(3) the petition fee; and

(4) a statement of the last known address of the non-signing inventor.

The present petition lacks items (1) and (4).

The evidence presented indicates that petitioners communicated with joint inventor Zhang by email and that Mr. Zhang did not provide them with a mailing address for him in China and then upon a renewed request for mailing information for forwarding the application papers, Mr. Zhang denied any claims to inventorship. The requirement under 37 CFR 1.47(a) for proof that the application papers be sent to the non-signing inventor or that the non-signing inventor cannot be reached or refuses to sign the oath or declaration after having been presented with the application papers (specification, claims and drawings) is statutory and cannot be waived by the non-signing inventors denial of inventorship.

Even though petitioners attempted to gain information from the non-signing inventor as to his address, petitioners have not shown that additional efforts have been made to locate the non-signing inventor other than to request the information directly from the inventor. If petitioners would like to renew the argument that Mr. Zhang cannot be located, petitioners must present a showing that diligent efforts have been made to locate him.[1] Petitioners must however provide details, in an affidavit or declaration of facts by a person with first hand knowledge of the details, of the additional efforts to locate the non-signing inventor such as Internet, e-mail, or telephone directory searches, which have been undertaken to locate him. If repeated attempts to contact him by telephone, mail, and e-mail, are unsuccessful, petitioners will have established that he cannot be found despite diligent efforts.

Similarly, while the non-signing inventor has not had an opportunity to review the application papers, petitioner has not provided evidence sufficient to show that the complete application was ever presented to him. If an address for the non-signing inventor is located, petitioner will want to show proof that a copy of the application was sent or given to the non-signing inventors for review by providing a copy of the cover letter transmitting the application papers to the non-signing inventors or details given in an affidavit or declaration of facts by a person having first hand knowledge of the details.

Likewise, before a *bona fide* refusal can be shown, the non-signing inventor must have been given an opportunity to review the application. Therefore, petitioners must show proof that the non-signing inventor refuses to sign the declaration after being sent or given a copy of the application papers. If there is a written refusal, petitioners should submit a copy of that refusal with any renewed petition. If the refusal was made orally

---

[1]MPEP 409.03(d).

to a person, then that person must provide details of the refusal in an affidavit or declaration of facts.

Finally, if a question exists as to whether Mr. Zhang is in fact an inventor of the instant application, petitioners are directed to review the requirements under 37 CFR 1.48 for correcting inventorship.

Further correspondence with respect to this matter should be addressed as follows:

By mail: Mail Stop Petitions
Commissioner for Patents
P.O. Box 1450
Alexandria, VA 22313-1450

By FAX: (571) 273-8300
Office of Petitions

Telephone inquiries concerning this matter may be directed to the undersigned Petitions Attorney at (571) 272-3212.

Patricia Faison-Ball
Senior Petitions Attorney
Office of Petitions

UNITED STATES PATENT AND TRADEMARK OFFICE

Commissioner for Patents
United States Patent and Trademark Office
P.O. Box 1450
Alexandria, VA 22313-1450
www.uspto.gov

August 23, 2006

FILE COPY

Patent No. : 7,009,381 B2
Ser. No. : 10/685327
Inventor(s) : Jacobsen, et al.
Issued : March 7, 2006
Title : **ADAPTER METHOD AND APPARATUS FOR INTERFACING A TESTER WITH A DEVICE UNDER TEST**
Docket No. : **10031356-1**

Re: Request for Certificate of Correction

Consideration has been given your request for the issuance of a certificate of correction for the above-identified patent.

Comparison of the patent in **item 75**, with the corresponding location in the application file reveals that there is no discrepancy.

It has been the practice of the Patent and Trademark Office for many years to correct errors of the nature noted in your request by the issuance of a certificate of correction. Your request for a corrected patent is not practicable.

In view of the foregoing, your request is hereby denied.

A certificate of correction will issue for the remaining error noted in your request.

Elisha Evans
For Cecelia Newman, Supervisor
Decisions & Certificates
of Correction Branch
(703) 308-9390 ext. 110

AGILENT TECHNOLOGIES, INC.
Legal Department, DL 429
Intellectual Property Administration
P.O. Box 7599
Loveland CO 80537-0599

CBN/eme

UNITED STATES PATENT AND TRADEMARK OFFICE

UNITED STATES DEPARTMENT OF COMMERCE
United States Patent and Trademark Office
Address: COMMISSIONER FOR PATENTS
P.O. Box 1450
Alexandria, Virginia 22313-1450
www.uspto.gov

APPL NO.	FILING OR 371 (c) DATE	ART UNIT	FIL FEE REC'D	ATTY.DOCKET NO	DRAWINGS	TOT CLMS	IND CLMS
10/685,354	10/10/2003	2621	1986	03224.0006U1	9	66	6

CONFIRMATION NO. 1202

CORRECTED FILING RECEIPT

OC000000014795810

23859
NEEDLE & ROSENBERG, P.C.
SUITE 1000
999 PEACHTREE STREET
ATLANTA, GA 30309-3915

Date Mailed: 12/20/2004

Receipt is acknowledged of this regular Patent Application. It will be considered in its order and you will be notified as to the results of the examination. Be sure to provide the U.S. APPLICATION NUMBER, FILING DATE, NAME OF APPLICANT, and TITLE OF INVENTION when inquiring about this application. Fees transmitted by check or draft are subject to collection. Please verify the accuracy of the data presented on this receipt. **If an error is noted on this Filing Receipt, please write to the Office of Initial Patent Examination's Filing Receipt Corrections, facsimile number 703-746-9195. Please provide a copy of this Filing Receipt with the changes noted thereon. If you received a "Notice to File Missing Parts" for this application, please submit any corrections to this Filing Receipt with your reply to the Notice. When the USPTO processes the reply to the Notice, the USPTO will generate another Filing Receipt incorporating the requested corrections (if appropriate).**

Applicant(s)

Michael Chen, Wallingsford, PA;

Power of Attorney: The patent practitioners associated with Customer Number **23859**.

Domestic Priority data as claimed by applicant

Foreign Applications

If Required, Foreign Filing License Granted: 01/06/2004

The country code and number of your priority application, to be used for filing abroad under the Paris Convention, is US10/685,354

Projected Publication Date: 04/14/2005

Non-Publication Request: No

Early Publication Request: No

Title

Method, apparatus, and system for preparing images for integration and combining images into an integrated image

Preliminary Class

382

LICENSE FOR FOREIGN FILING UNDER
Title 35, United States Code, Section 184
Title 37, Code of Federal Regulations, 5.11 & 5.15

GRANTED

The applicant has been granted a license under 35 U.S.C. 184, if the phrase "IF REQUIRED, FOREIGN FILING LICENSE GRANTED" followed by a date appears on this form. Such licenses are issued in all applications where the conditions for issuance of a license have been met, regardless of whether or not a license may be required as set forth in 37 CFR 5.15. The scope and limitations of this license are set forth in 37 CFR 5.15(a) unless an earlier license has been issued under 37 CFR 5.15(b). The license is subject to revocation upon written notification. The date indicated is the effective date of the license, unless an earlier license of similar scope has been granted under 37 CFR 5.13 or 5.14.

This license is to be retained by the licensee and may be used at any time on or after the effective date thereof unless it is revoked. This license is automatically transferred to any related applications(s) filed under 37 CFR 1.53(d). This license is not retroactive.

The grant of a license does not in any way lessen the responsibility of a licensee for the security of the subject matter as imposed by any Government contract or the provisions of existing laws relating to espionage and the national security or the export of technical data. Licensees should apprise themselves of current regulations especially with respect to certain countries, of other agencies, particularly the Office of Defense Trade Controls, Department of State (with respect to Arms, Munitions and Implements of War (22 CFR 121-128)); the Office of Export Administration, Department of Commerce (15 CFR 370.10 (j)); the Office of Foreign Assets Control, Department of Treasury (31 CFR Parts 500+) and the Department of Energy.

NOT GRANTED

No license under 35 U.S.C. 184 has been granted at this time, if the phrase "IF REQUIRED, FOREIGN FILING LICENSE GRANTED" DOES NOT appear on this form. Applicant may still petition for a license under 37 CFR 5.12, if a license is desired before the expiration of 6 months from the filing date of the application. If 6 months has lapsed from the filing date of this application and the licensee has not received any indication of a secrecy order under 35 U.S.C. 181, the licensee may foreign file the application pursuant to 37 CFR 5.15(b).

UNITED STATES PATENT AND TRADEMARK OFFICE

Commissioner for Patents
United States Patent and Trademark Office
P.O. Box 1450
Alexandria, VA 22313-1450
www.uspto.gov

PHILIPS INTELLECTUAL PROPERTY & STANDARDS
P O BOX 3001
BRIARCLIFF MANOR, NY 10510

COPY MAILED

FEB 0 2 2007

OFFICE OF PETITIONS

In re Application of :
Bjorn Bluthgen et al :
Application No. 10/685,358 : DECISION GRANTING PETITION
Filed: October 14, 2003 : UNDER 37 CFR 1.137(b)
Attorney Docket No. PHQ 92,003C :

This is a decision on the petition under 37 CFR 1.137(b), filed July 19, 2006, to revive the above-identified application.

The petition is **GRANTED**.

The above-identified application became abandoned for failure to reply in a timely manner to the non-final Office action mailed August 4, 2005, which set a shortened statutory period for reply of three (3) months. No extensions of time under the provisions of 37 CFR 1.136(a) were obtained. Accordingly, the above-identified application became abandoned on November 5, 2005. A Notice of Abandonment was mailed on February 24, 2006.

The rule at 37 CFR 1.137(b)(3) requires a statement that "the entire delay in filing the required reply from the due date for the reply until the filing of a grantable petition pursuant to 37 CFR 1.137(b) was unintentional." Since the statement appearing in the petition varies from the language of the rule, the statement is being construed as the statement required by 37 CFR 1.137(b)(3). Petitioner must notify the Office if this is **not** a correct interpretation of the statement appearing in the petition.

The petition satisfies the conditions for revival pursuant to the provisions of 37 CFR 1.137(b) in that (1) the reply to the August 4, 2005 Office action, (2) the $1,500 petition fee, and (3) an adequate statement of unintentional delay have been received. Accordingly, the reply to the non-final Office action of August 4, 2005 is accepted as having been unintentionally delayed.

It is not apparent whether the person signing the statement of unintentional delay was in a position to have firsthand or direct

knowledge of the facts and circumstances of the delay at issue. Nevertheless, such statement is being treated as having been made as the result of a reasonable inquiry into the facts and circumstances of such delay. See 37 CFR 10.18(b) and Changes to Patent Practice and Procedure; Final Rule Notice, 62 Fed. Reg. 53131, 53178 (October 10, 1997), 1203 Off. Gaz. Pat. Office 63, 103 (October 21, 1997). In the event that such an inquiry has not been made, petitioner must make such an inquiry. If such inquiry results in the discovery that it is not correct that the entire delay in filing the required reply from the due date for the reply until the filing of a grantable petition pursuant to 37 CFR 1.137(b) was unintentional, petitioner must notify the Office.

There is no indication that the person signing the instant petition was ever given a power of attorney to prosecute the above-identified application. If the person signing the petition desires to receive future correspondence regarding this application, the appropriate power of attorney documents must be submitted. While a courtesy copy of this decision is being mailed to the person signing the petition, all future correspondence will be directed to the address currently of record until such time as appropriate instructions are received to the contrary.

Telephone inquiries concerning this decision should be directed to the undersigned at (571) 272-3218.

This matter is being referred to Technology Center AU 2675 for appropriate action in the normal course of business on the reply received July 19, 2006.

Frances Hicks
Petitions Examiner
Office of Petitions

cc:

Dicran Halajian
Thorne & Halajian, LLP
Applied Technology Center
111 West Main Street
Bay Shore, NY 11706

UNITED STATES PATENT AND TRADEMARK OFFICE

Commissioner for Patents
United States Patent and Trademark Office
P.O. Box 1450
Alexandria, VA 22313-1450
www.uspto.gov

NOVO NORDISK, INC.
INTELLECTUAL PROPERTY DEPARTMENT
100 COLLEGE ROAD WEST
PRINCETON NJ 08540

COPY MAILED

JUL 08 2008

In re Application of :
Thim, et al. :
Application No.: 10/685,368 : ON PETITION
Filing Date: October 14, 2003 :
Attorney Docket No. 6459.500-US :

This is a decision on the petition under 37 CFR 1.47 filed December 21, 2007, and in supplement on June 30, 2008. The petition will be treated as a petition under 37 CFR 1.183 to waive the requirements of 37 CFR 1.48.

The petition is **dismissed.**

The record reflects that the joint inventors named in subject application executed the declaration required by 37 CFR 1.63, and that the executed declaration was filed on February 7, 2004. Petitioner now files the instant petition under 37 CFR 1.47 because one of the joint inventors could not be located to participate in the signing of a new declaration under 37 CFR 1.48 to add a new inventor. Petitioner requested that the declaration under 37 CFR 1.48 be accepted without inventor Kaarsholm.

It is noted that the provisions of 37 CFR 1.47 only apply to the execution of the original oath or declaration under 37 CFR 1.63. A petition under 37 CFR 1.47 is not appropriate in this case because the joint inventors executed the original declaration. Relief could have been granted pursuant to 37 CFR 1.183, by the waiver or suspension of the requirements of 37 CFR 1.48 as to inventor Kaarsholm.

Accordingly, the instant petition will be treated as petition under 37 CFR 1.183 to waive the requirements of 37 CFR 1.48 as to inventor Kaarsholm. The petition under 37 CFR 1.183 is being dismissed, however, because, by the filing made June 30, 2008, petitioner states that inventor Kaarsholm has been found and has executed a supplemental declaration that includes the name of the joint inventor petitioner wishes to add to the application. Waiver of the 37 CFR 1.48 is not necessary, and the petition is dismissed accordingly.

Petitioner is advised that the petition under 37 CFR 1.48 is properly treated in the Technology Center. It is noted, however, that the issue fee for this application was paid on December 21, 2007. The Technology Center may require that the inventorhsip for this application be corrected pursuant to 37 CFR 1.324 after issuance of the patent. In any case, this matter requires no further consideration by the Office of Petitions and questions regarding correction of inventorship under 37 CFR 1.48 or 37 CFR 1.324 should be directed to Technology Center 1600, GAU 1654.

The application file will be directed to Technology Center 1600, GAU 1654 for further consideration.

Telephone inquiries regarding this decision should be directed to the undersigned at (571) 272-3222.

Kenya A. McLaughlin
Petitions Attorney
Office of Petitions

UNITED STATES PATENT AND TRADEMARK OFFICE

Commissioner for Patents
United States Patent and Trademark Office
P.O. Box 1450
Alexandria, VA 22313-1450
www.uspto.gov

FISH & RICHARDSON
P.O. BOX 1022
MINNEAPOLIS MN 55440-1022

COPY MAILED

SEP 1 2 2005

OFFICE OF PETITIONS

In re Application of :
Shunpei Yamazaki et al :
Application No. 10/685,398 : ON PETITION
Filed: October 16, 2003 :
Attorney Docket No. 12732-168001 :

This is a decision on the petition, filed September 9, 2005, under 37 CFR 1.313(c)(2) to withdraw the above-identified application from issue after payment of the issue fee.

The petition is **GRANTED.**

The above-identified application is withdrawn from issue for consideration of a submission under 37 CFR 1.114 (request for continued examination). See 37 CFR 1.313(c)(2).

Petitioner is advised that the issue fee paid on August 4, 2005 in the above-identified application cannot be refunded. If, however, the above-identified application is again allowed, petitioner may request that it be applied towards the issue fee required by the new Notice of Allowance.[1]

Telephone inquiries should be directed to the undersigned at (571) 272-3208.

The examiner of Technology Center AU 2891 will consider the request for continued examination under 37 CFR 1.114.

Karen Creasy
Petitions Examiner
Office of Petitions
Office of the Deputy Commissioner
for Patent Examination Policy

[1] The request to apply the issue fee to the new Notice may be satisfied by completing and returning the new Issue Fee Transmittal Form PTOL-85(b), which includes the following language thereon: "Commissioner for Patents is requested to apply the Issue Fee and Publication Fee (if any) or re-apply any previously paid issue fee to the application identified above." Petitioner is advised that, whether a fee is indicated as being due or not, the Issue Fee Transmittal Form **must** be completed and timely submitted to avoid abandonment. Note the language in bold text on the first page of the Notice of Allowance and Fee(s) Due (PTOL-85).

UNITED STATES PATENT AND TRADEMARK OFFICE

COMMISSIONER FOR PATENTS
UNITED STATES PATENT AND TRADEMARK OFFICE
P.O. BOX 1450
ALEXANDRIA, VA 22313-1450
www.uspto.gov

Paper No. _____

Date : September 9, 2005

TO : Director, Office of Patent Publication

FROM : Office of the Deputy Commissioner
for Patent Examination Policy

SUBJECT : Withdrawal from Issue of

Applicant(s) :Shunpei Yamazaki et al
Application No. :10/685,398
Filed :October 16, 2003

The above-identified application has been assigned Patent No. 6,943,093 and an issue date of September 13, 2005.

It is hereby directed that this application be withdrawn from issue at the request of the applicant.

Do not refund the issue fee.

The following erratum should be published in the Official Gazette if the above-identified application is published in the OG of September 13, 2005:

"All reference to Patent No. 6,943,093 to Shunpei Yamazaki et al of Japan for SEMICONDUCTOR APPARATUS AND FABRICATION METHOD OF THE SAME appearing in the Official Gazette of September 13, 2005 should be deleted since no patent was granted."

Karen Creasy

Karen Creasy
Petitions Examiner
Office of Petitions
Office of the Deputy Commissioner
for Patent Examination Policy

cc: Paul Harrison, MDW-4B03,(FAX-273-5468)
Deneise Boyd, MDE-3D39 (FAX-273-5124)
Mary Louise McAskill, ST-8C15 (FAX 305-4372)
Niomi Farmer, ST-8C14 (FAX-305-4372)
Mary E. Johnson (Cookie), MDE-7C71 (FAX 273-0038
Duane Davis P/OPC MDE-7D89
Tamara Greene, ST-8C13

UNITED STATES PATENT AND TRADEMARK OFFICE

AUG 30 2005

Commissioner for Patents
United States Patent and Trademark Office
P.O. Box 1450
Alexandria, VA 22313-1450
www.uspto.gov

B.J. Sadoff
NIXON & VANDERHYE, PC
901 NORTH GLEBE ROAD, 11TH FLOOR
ARLINGTON VA 22203

In re Application of
Maertens et al
Serial No. : 10/685,435
Filed : 16 October 2003
Attorney Dkt No. : 2551-130

Decision on Petition

This is in response to the petition under 37 CFR 1.144 filed 02 May 2005, to request review of a restriction requirement.

BACKGROUND

A review of the file history shows that this application was filed under 35 USC 111(a) on October 16, 2003 as a divisional of application 09/566,266, filed May 5, 2000, now US 6,855,318, which was a continuation of PCT/EP98/07105, filed November 6, 1998.

On 9 September 2004, the examiner mailed a restriction requirement dividing claims 23-31 into eight groups and a species election of a single polypeptide sequence from among SEQ ID NO:1-16 and 37 if any one of group I, III, V or VII is elected and election of polypeptides from among SEQ ID NO:17-36 if any one of groups II, IV, VI or VIII is elected.

In the response filed on 12 October 2004, applicants elected Group I, claims 23-25 and 29. Applicants elected SEQ ID NO: 15 with traverse and for purpose of initial search only, arguing that Examiner needs to search the complete breadth of the pending claims and withdraw the species election requirement, with a note that the parent application includes allowed claims which read on multiple sequences.

On 30 December 2004, the examiner mailed a first Office action on the merits acknowledging the election of the groups and the species, found the traversal non-persuasive with respect to the species election among the various sequences, noting that under the test of *In re Harnisch*, 206 USPQ 300 (CCPA 1980), the claimed sequences fail as a proper Markush Group because they share no common substantial structural feature

and therefore the sequences represent independent inventions (for which no generic linking claim has been provided) because of which there is no requirement to extend the search to additional species (MPEP 809.02), and made the restriction requirement FINAL.

In response to the Office action of 12-30-2004, applicants filed the instant petition, accompanying arguments and amendments of the claims on 5-2-05. Applicants have petitioned to review the restriction requirement for a HCV E2 envelop peptide consisting of a single amino acid sequence.

DISCUSSION

The application, file history and petition have been considered carefully.

The petition requests that in addition to examination of the elected invention directed to protein having SEQ ID No 15, examination of the proteins having SEQ ID Nos: 1-14, 16 and 37, in view of MPEP 803.04 be made. This is not persuasive. MPEP 803.04 is directed only to a waiver for restriction requirement with regard to nucleic acid inventions described by nucleotide sequences. The Office has not issued any waiver with respect to restriction requirement among protein inventions.

The petition argues that it would not be a serious burden to search and examine all the peptides together. The petition points to common classes and subclasses which were searched during examination of parent serial number 09/566,266. MPEP 808.02(c) points to a different field of search as grounds for establishing burden if restriction is to be required. It is noted that the literature and sequence database search is more pertinent than class and subclass searches for inventions claimed by polypeptide sequences. Furthermore, it is unlikely that applicants would accept prior art obtained by a search for one sequence in a rejection over a second sequence.

Applicant is reminded that restriction requirement is subject to the discretion of the examiner and thus what is done in one application is not necessarily relevant to another application. MPEP 811.04 states that a restriction requirement may be proper in a divisional application even though the inventions were grouped together in a parent application.

The request for withdrawal of the election of species is not persuasive because the peptides do not share a common structure which is essential to the common utility, per MPEP 803.02. A review of two randomly selected sequences, SEQ ID No 1, and 13 with elected SEQ ID No 15 shows no apparent sequence similarity.

<400> 15
Ser Ile Tyr Pro Gly His Ile Thr Gly His Arg Met Ala Trp Asp Met
1 5 10 15

Met Met Asn Trp Ser Pro Thr Thr Ala Leu Val Val Ser Gln Leu Leu
20 25 30

Arg Ile

<400> 1
Tyr Gln Val Arg Asn Ser Thr Gly Leu Tyr His Val Thr Asn Asp Cys
1 5 10 15

Pro Asn Ser Ser Ile Val Tyr Glu Ala Ala Asp Ala Ile Leu His Thr
20 25 30

Pro Gly Cys
35

<400> 13
His Val Asp Leu Leu Val Gly Ala Ala Ala Phe Cys Ser Ala Met Tyr
1 5 10 15

Val Gly Asp Leu Cys Gly Ser Val Phe Leu Val Ser Gln Leu
20 25 30

The request for examination of independent or distinct inventions which are few in number or closely related, in view of MPEP 803.02, is not persuasive because the original claims recited in the alternative 17 amino acid sequences. This is not considered to be few in number. Furthermore, as set forth above, the sequences are not closely related in structure. Additionally, there is nothing on the record to suggest that the HCV envelop proteins are obvious variants of each another. Should applicant traverse on the ground that the species are not patentably distinct, applicant should submit evidence or identify such evidence now of record showing the species to be obvious variants or clearly admit on the record that this is the case. In either instance, if the examiner finds one of the inventions unpatentable over the prior art, the evidence or admission may be used in a rejection under 35 U.S.C. 103(a) of the other invention.

Finally, even if the sequences were encompassed by an allowable generic claim, written in the format such as "A HCV envelop 2 protein" the restriction to non-elected species would be maintained as long as there is one claim directed to one of the additional species embraced by an allowable generic claim which is not in the required form, i.e., does not require all the limitations of an allowable claim. See MPEP 809.02(c). Claim 24, for example, is anticipated by Maertens et al (WO 96/04385) or Dreesman (WO93/06488). Therefore the elected invention, as broadly claimed, is not free of the prior art. Any request to extend the search in view of election of species practice or linking claim practice is not persuasive absent (1) a novel and unobvious species that contains a common structure essential to a common utility with the non-elected species or (2) an allowable generic linking claim.

DECISION

For these reasons, the petition to withdraw the restriction requirement is **DENIED**.

Any request for consideration must be filed within two (2) months of the mailing date of this decision.

Applicants remain under obligation to reply to the Final Office action mailed 31 July 2005 with in the response time specified therein or as extendable under 37 CFR 1.136(a).

Should there be any questions regarding this decision, please contact Special Program Examiner Julie Burke, by mail addressed to Director, Technology Center 1600, PO BOX 1450, ALEXANDRIA, VA 22313-1450, or by telephone at (571) 272-1600 or by Official Fax at 571-273-8300.

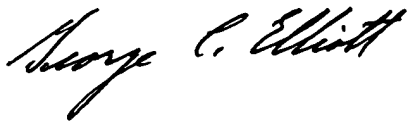

George Elliott
Director, Technology Center 1600

UNITED STATES PATENT AND TRADEMARK OFFICE

Commissioner for Patents
United States Patent and Trademark Office
P.O. Box 1450
Alexandria, VA 22313-1450
www.uspto.gov

Yi-Wen Tseng
#D306
509 ROOSEVELT BLVD.
FALLS CHURCH VA 22044

JUL 18 2006

In re Application of:
TAN *et al.*
Serial No.: 10/685,451
Filed: October 16, 2003
Attorney Docket No.: **OP-092000246**

DECISION ON PETITION
TO WITHDRAW HOLDING
OF ABANDONMENT

This is a decision on the petition filed on January 03, 2005. The petition has been treated as a petition under 37 C.F.R. § 1.181, to withdraw the holding of abandonment of the above-identified application. No fee is required.

The petition is **GRANTED**.

The application was held abandoned for failure to timely file a response to the Office action mailed on April 22, 2004. A Notice of Abandonment was mailed on November 01, 2004.

Petitioner asserts that a response was timely filed by facsimile transmission on July 20, 2004. To support this assertion, petitioner has submitted 1) a copy of the response including an amendment, 2) a copy of a certificate under 37 C.F.R. § 1.8(a) showing a date of transmission on July 20, 2004, and 3) a copy of the auto-reply facsimile transmission from the USPTO confirming successful transmission of the response.

A review of the application file reveals that petitioner provided the incorrect Serial No. "10/865,451" on both the facsimile cover sheet. However, a minor error in the identification of the application can be corrected by the Office provided the correct identification can be quickly discovered. M.P.E.P. § 502. In this instance, the attorney docket number and title should have resulted in the response being correctly matched with the application. Petitioner should make special note to provide the correct serial number on future correspondence. The response filed originally on July 20, 2004, has been located and place in the application file.

For the above stated reason, the petition is granted. The Notice of Abandonment is hereby vacated and the holding of abandonment withdrawn. The application is restored to pending status.

The application file is being forwarded to the examiner of record for consideration of the response and prompt appropriate action.

Inquiries regarding this decision should be directed to Clayton E. LaBalle, Special Programs Examiner, at (571) 272-1594.

Richard K. Seidel, Director
Technology Center 2800
Semiconductors, Electrical and Optical
Systems and Components

UNITED STATES PATENT AND TRADEMARK OFFICE

UNITED STATES DEPARTMENT OF COMMERCE
United States Patent and Trademark Office
Address: COMMISSIONER FOR PATENTS
P.O. Box 1450
Alexandria, Virginia 22313-1450
www.uspto.gov

SHOOK, HARDY & BACON L.L.P.
(MICROSOFT CORPORATION)
INTELLECTUAL PROPERTY DEPARTMENT
2555 GRAND BOULEVARD
KANSAS CITY, MO 64108-2613

Mail Date: 04/21/2010

Applicant	: Ashvinkumar Jayantilal Sanghvi	: DECISION ON REQUEST FOR
Patent Number	: 7624174	: RECALCULATION of PATENT
Issue Date	: 11/24/2009	: TERM ADJUSTMENT IN VIEW
Appliction No	: 10/685,472	: OF WYETH AND NOTICE OF INTENT TO
Filed	: 10/16/2003	: ISSUE CERTIFICATE OF CORRECTION
		:

The Request for Recalculation is **GRANTED** to the extent indicated.

The patent term adjustment has been determined to be **1327** days. The USPTO will *sua sponte* issue a certificate of correction reflecting the amount of PTA days determined by the recalculation.

Prior to the issuance of the certificate of correction, the USPTO will afford patentee an opportunity to be heard and request reconsideration. Accordingly, patentee has **one month or thirty (30) days**, whichever is longer, to file a request for reconsideration of this patent term adjustment calculation. See 35 U.S.C. 154(b)(3)(B)(ii) and 37 CFR 1.322(a)(4). No extensions of time will be granted under 37 CFR 1.136.

Patentee should use document code PET.OP if electronically filing a request for reconsideration of this patent term adjustment calculation. The patentee must also include the information required by 37 CFR 1.705(b)(2) and the fee required by 37 CFR 1.18(e). If patentee does not file a timely request for reconsideration of this patent term adjustment calculation including the information required by 37 CFR 1.705(b)(2) and the fee required by 37 CFR 1.18(e), the USPTO will issue a certificate of correction reflecting the PTA determination noted above.

Patentee should be aware that in order to preserve the right to review in the United States District Court for the District of Columbia of the USPTO patent term adjustment determination, patentee must ensure that he or she also take the steps required under 35 U.S.C. 154(b)(4)(A) in a timely manner. Nothing in the request for recalculation should be construed as providing an alternative time frame for commencing a civil action under 35 U.S.C. 154(b)(4)(A).

Any questions concerning this decision should be directed to the Office of Patent Legal Administration at 571-272-7702.

UNITED STATES PATENT AND TRADEMARK OFFICE

UNITED STATES DEPARTMENT OF COMMERCE
United States Patent and Trademark Office
Address: COMMISSIONER FOR PATENTS
P.O. Box 1450
Alexandria, Virginia 22313-1450
www.uspto.gov

SHOOK, HARDY & BACON L.L.P.
(MICROSOFT CORPORATION)
INTELLECTUAL PROPERTY DEPARTMENT
2555 GRAND BOULEVARD
KANSAS CITY, MO 64108-2613

Mail Date: 05/18/2010

Applicant : Ashvinkumar Jayantilal Sanghvi
Patent Number : 7624174
Issue Date : 11/24/2009
Application No: 10/685,472
Filed : 10/16/2003

: NOTICE CONCERNING IMPROPER
: CALCULATION OF PATENT TERM
: ADJUSTMENT BASED UPON USPTO
: IMPROPERLY MEASURING REDUCTION
: PERIOD UNDER 37 CFR 1.704(c)(10).

The United States Patent and Trademark Office (USPTO) discovered that in processing the recent recalculation decisions mailed in response to patentee's filed Request for Recalculation of Patent Term Adjustment in view of Wyeth, the USPTO improperly measured the reduction period for reductions under 37 CFR 1.704(c)(10). Pursuant to 37 CFR 1.704(c)(10), patentee's reduction begins on the date of filing the amendment under 37 CFR 1.312 ("1.312 amendment") or other related paper and ends on the date that the Office mails a response to the filing of the 1.312 amendment or other paper. It has been discovered that during the recalculation, the calculation failed to the limit the reduction to the mail date of the response to the 1.312 amendment or other paper. Accordingly, patentee's reductions were greater than warranted.

This notice **VACATES** the previous GRANTED request for recalculation and provides patentee with a revised GRANTED recalculation.

The patent term adjustment has been determined to be **1380** days. The USPTO will *sua sponte* issue a certificate of correction reflecting the amount of patent term adjustment (PTA) days determined by the recalculation.

Prior to the issuance of the certificate of correction, the USPTO will afford patentee an opportunity to be heard and request reconsideration. Accordingly, patentee has **one month or thirty (30) days** from the mail date of this notice, whichever is longer, to file a request for reconsideration of this PTA calculation. See 35 U.S.C. § 154(b)(3)(B)(ii) and 37 CFR 1.322(a)(4).

Patentee should use document code PET.OP if electronically filing a request for reconsideration of this PTA calculation. The patentee must also include the information required by 37 CFR 1.705(b)(2), and the fee required by 37 CFR 1.18(e). If patentee does not file a timely request for reconsideration of this PTA calculation, including the information required by 37 CFR 1.705(b)(2) and the fee required by 37 CFR 1.18(e), the USPTO will issue a certificate of correction reflecting the PTA determination noted above.

Patentee should be aware that in order to preserve the right of review of the USPTO's PTA determination in the United States District Court for the District of Columbia, patentee must ensure that the steps required under 35 U.S.C. § 154 (b)(4) are taken in a timely manner. Nothing in the request for recalculation should be construed as providing an alternative time frame for commencing a civil action under 35 U.S.C. § 154(b)(4).

SPE RESPONSE FOR CERTIFICATE OF CORRECTION

Paper No.: _____

DATE : 07/28/09

TO SPE OF : ART UNIT 2624

SUBJECT : Request for Certificate of Correction for Appl. No.: 10685498 Patent No.: 7502504 B2

Please respond to this request for a certificate of correction within 7 days.

FOR IFW FILES:

Please review the requested changes/corrections as shown in the **COCIN** document(s) in the IFW application image. No new matter should be introduced, nor should the scope or meaning of the claims be changed.

Please complete the response (see below) and forward the completed response to scanning using document code **COCX**.

FOR PAPER FILES:

Please review the requested changes/corrections as shown in the attached certificate of correction. Please complete this form (see below) and forward it with the file to:

Certificates of Correction Branch (C of C)
Randolph Square 9D40-D
Palm Location 7580

[redacted]

Lamonte Newsome
Certificates of Correction Branch
703-756-1574

Thank You For Your Assistance

The request for issuing the above-identified correction(s) is hereby:
Note your decision on the appropriate box.

- ☑ **Approved** — **All** changes apply.
- ☐ **Approved in Part** — Specify below which changes **do not** apply.
- ☐ **Denied** — State the reasons for denial below.

Comments: _____

Mark C Bell Aug. 10, 2009

UNITED STATES PATENT AND TRADEMARK OFFICE

UNITED STATES DEPARTMENT OF COMMERCE
United States Patent and Trademark Office
Address: COMMISSIONER FOR PATENTS
P.O. Box 1450
Alexandria, Virginia 22313-1450
www.uspto.gov

APPLICATION NO.	FILING DATE	FIRST NAMED INVENTOR	ATTORNEY DOCKET NO.	CONFIRMATION NO.
10/685,550	10/14/2003	Wayne G. Renken	SENS.005US1	4924

36257 7590 03/16/2006

PARSONS HSUE & DE RUNTZ LLP
595 MARKET STREET
SUITE 1900
SAN FRANCISCO, CA 94105

EXAMINER	
GARBER, CHARLES D	

ART UNIT	PAPER NUMBER
2856	

DATE MAILED: 03/16/2006

Please find below and/or attached an Office communication concerning this application or proceeding.

UNITED STATES PATENT AND TRADEMARK OFFICE

Commissioner for Patents
United States Patent and Trademark Office
P.O. Box 1450
Alexandria, VA 22313-1450
www.uspto.gov

FEB 16 2006

PARSONS HSUE & DE RUNTZ LLP
595 Market Street
Suite 1900
San Francisco, CA 94105

In re Application of:
Wayne G. Renken
Serial No.: 10/685,550
Filed: October 14, 2003
Attorney Docket No.: **SENS.005US1**

DECISION ON PETITION TO WITHDRAW HOLDING OF ABANDONMENT

This is a decision on the petition filed on February 16, 2005, and refilled on July 28, 2005, to withdraw the holding of abandonment under 37 C.F.R. § 1.181. No fee is required.

The petition is **GRANTED**.

The application was held abandoned for failure to timely file a response to the Office action mailed on June 29, 2004. A Notice of Abandonment was mailed on February 07, 2005.

Petitioner asserts that on September 27, 2004, a response including an amendment was filed. To support this assertion, petitioner has submitted a copy of the response and a copy of a return postcard receipt, which acknowledges receipt in the PTO of the amendment on September 27, 2004.

A review of the application file record reveals that the above-identified response having been acknowledged as being received in the PTO on September 27, 2004, is not of record in the application file and cannot be located. However, M.P.E.P. § 503 states, "A postcard receipt which itemizes and properly identifies the items which are being filed serves as *prima facie* evidence of receipt in the PTO of all the items listed thereon on the date stamped thereon by the PTO." Accordingly, it is concluded that the response was timely received in the PTO but lost somewhere after receipt thereof.

For the above stated reason, the petition is granted. The Notice of Abandonment is hereby vacated and the holding of abandonment withdrawn. The application is restored to pending status.

The copy of the response submitted with the petition on February 16, 2005, is accepted since the response originally submitted was apparently lost.

The application file is being forwarded to the examiner of record for consideration of the response and prompt appropriate action.

Inquiries regarding this decision should be directed to Clayton E. LaBalle, Special Programs Examiner, at (571) 272-1594.

Arthur T. Grimley, Director
Technology Center 2800
Semiconductors, Electrical and Optical
Systems and Components

UNITED STATES PATENT AND TRADEMARK OFFICE

UNITED STATES DEPARTMENT OF COMMERCE
United States Patent and Trademark Office
Address: COMMISSIONER FOR PATENTS
P.O. Box 1450
Alexandria, Virginia 22313-1450
www.uspto.gov

BACON & THOMAS, PLLC
625 SLATERS LANE
FOURTH FLOOR
ALEXANDRIA, VA 22314-1176

Mail Date: 04/21/2010

Applicant	: Hugo Michiels	: DECISION ON REQUEST FOR
Patent Number	: 7596235	: RECALCULATION of PATENT
Issue Date	: 09/29/2009	: TERM ADJUSTMENT IN VIEW
Appliction No	: 10/685,576	: OF WYETH AND NOTICE OF INTENT TO
Filed	: 10/16/2003	: ISSUE CERTIFICATE OF CORRECTION
		:

The Request for Recalculation is **GRANTED** to the extent indicated.

The patent term adjustment has been determined to be **0** days. The USPTO will *sua sponte* issue a certificate of correction reflecting the amount of PTA days determined by the recalculation.

Prior to the issuance of the certificate of correction, the USPTO will afford patentee an opportunity to be heard and request reconsideration. Accordingly, patentee has **one month or thirty (30) days**, whichever is longer, to file a request for reconsideration of this patent term adjustment calculation. See 35 U.S.C. 154(b)(3)(B)(ii) and 37 CFR 1.322(a)(4). No extensions of time will be granted under 37 CFR 1.136.

Patentee should use document code PET.OP if electronically filing a request for reconsideration of this patent term adjustment calculation. The patentee must also include the information required by 37 CFR 1.705(b)(2) and the fee required by 37 CFR 1.18(e). If patentee does not file a timely request for reconsideration of this patent term adjustment calculation including the information required by 37 CFR 1.705(b)(2) and the fee required by 37 CFR 1.18(e), the USPTO will issue a certificate of correction reflecting the PTA determination noted above.

Patentee should be aware that in order to preserve the right to review in the United States District Court for the District of Columbia of the USPTO patent term adjustment determination, patentee must ensure that he or she also take the steps required under 35 U.S.C. 154(b)(4)(A) in a timely manner. Nothing in the request for recalculation should be construed as providing an alternative time frame for commencing a civil action under 35 U.S.C. 154(b)(4)(A).

Any questions concerning this decision should be directed to the Office of Patent Legal Administration at 571-272-7702.

UNITED STATES PATENT AND TRADEMARK OFFICE

COMMISSIONER FOR PATENTS
UNITED STATES PATENT AND TRADEMARK OFFICE
P.O. BOX 1450
ALEXANDRIA, VA 22313-1450
WWW.USPTO.GOV

Paper No. None

Ching-Chun Tsai
P.O. Box No. 6-57
Junghe, Taipei 235 TW TAIWAN

COPY MAILED

MAY 2 4 2006

OFFICE OF PETITIONS

In re Application of	:	
Ching-Chun Tsai	:	
Application No. 10/685,596	:	DECISION ON PETITION
Filed: October 16, 2003	:	UNDER 37 C.F.R. §1.181(A)
Title: INFLATING TOY	:	

This is a decision on the petition under 37 C.F.R. §1.181(a) to withdraw the holding of abandonment, filed on May 3, 2005.

The Office regrets the period of delay in issuing this decision.

BACKGROUND

The above-identified application became abandoned for failure to reply in a timely manner to the non-final Office action, mailed April 7, 2004, which set a shortened statutory period for reply of three (3) months. No response was received, and no extensions of time under the provisions of 37 C.F.R. §1.136(a) were requested. Accordingly, the above-identified application became abandoned on July 8, 2004. A notice of abandonment was mailed on October 19, 2004.

With the present petition, Petitioner has alleged that the non-final Office action of April 7, 2004 was not received. A discussion follows.

RELEVANT PORTION OF THE MPEP

MPEP 711.03(c) sets forth, in part:

PETITION TO WITHDRAW HOLDING OF ABANDONMENT BASED ON FAILURE TO RECEIVE OFFICE ACTION

In Delgar v. Schulyer, 172 USPQ 513 (D.D.C. 1971), the court decided that the Office should mail a new Notice of Allowance in view of the evidence presented in support of the contention that the applicant's representative did not receive the original Notice of Allowance. Under the reasoning of Delgar, an allegation that an Office action was never received may be considered in a petition to withdraw the holding of abandonment. If adequately supported, the Office may grant the petition to withdraw the holding of abandonment and remail the Office action. That is, the reasoning of Delgar is applicable regardless of whether an application is held abandoned for failure to timely pay the issue fee (35 U.S.C. 151) or for failure to prosecute (35 U.S.C. 133).

To minimize costs and burdens to practitioners and the Office, the Office has modified the showing required to establish nonreceipt of an Office action. The showing required to establish nonreceipt of an Office communication must include a statement from the practitioner stating that the Office communication was not received by the practitioner and attesting to the fact that a search of the file jacket and docket records indicates that the Office communication was not received. A copy of the docket record where the nonreceived Office communication would have been entered had it been received and docketed must be attached to and referenced in practitioner's statement. For example, if a three month period for reply was set in the nonreceived Office action, a copy of the docket report showing all replies docketed for a date three months from the mail date of the nonreceived Office action must be submitted as documentary proof of nonreceipt of the Office action. See Notice entitled "Withdrawing the Holding of Abandonment When Office Actions Are Not Received," 1156 O.G. 53 (November 16, 1993).

The showing outlined above may not be sufficient if there are circumstances that point to a conclusion that the Office action may have been lost after receipt rather than a conclusion that the Office action was lost in the mail (e.g., if the practitioner has a history of not receiving Office actions).

Evidence of nonreceipt of an Office communication or action (e.g., Notice of Abandonment or an advisory action) other than that action to which reply was required to avoid abandonment would not warrant withdrawal of the holding of abandonment. Abandonment takes place by operation of law for failure to reply to an Office action or timely pay the issue fee, not by operation of the mailing of a Notice of Abandonment. See Lorenz v. Finkl, 333 F.2d 885, 889-90, 142 USPQ 26, 29-30 (CCPA 1964); Krahn v. Commissioner, 15 USPQ2d 1823, 1824 (E.D. Va 1990); In re Application of Fischer, 6 USPQ2d 1573, 1574 (Comm'r Pat. 1988).

Two additional procedures are available for reviving an application that has become abandoned due to a failure to reply to an Office Action: (1) a petition under 37 CFR 1.137(a) based upon unavoidable delay; and (2) a petition under 37 CFR 1.137(b) based on unintentional delay.

ANALYSIS

Petitioner has established that the Office communication was not received. The petition contains a statement from the practitioner stating that the Office communication was not received. Petitioner has further submitted an attestation to the fact that a search of the file jacket and docket records indicates that the Office communication was not received, as well as a copy of the docket record where the non-received Office communication would have been entered had it been received and docketed.

However, it is noted that Petitioner has a similar petition pending before the Office, where it is alleged that an Office action associated with application number 10/411,260 was not received. On renewed petition, Petitioner must state how many similar petitions he currently has pending before the Office and how frequently he encounters this problem in his practice, as it appears that he might have a history of not receiving Office actions.

CONCLUSION

For the reasons discussed above, the petition under 37 C.F.R. §1.181 must be **DISMISSED**.

Any renewed petition under 37 C.F.R. §1.181 must be submitted within **TWO (2) MONTHS** from the mail date of this decision. Extensions of time under 37 C.F.R. §1.136(a) are permitted. The request for reconsideration should include a cover letter entitled "Renewed Petition under 37 C.F.R. §1.181," and should only address the deficiencies noted in this decision.

The renewed petition should indicate in a prominent manner that the attorney handling this matter is Paul Shanoski, and may be submitted by mail[1], hand-delivery[2], or facsimile[3].

Paul Shanoski
Senior Attorney
Office of Petitions
United States Patent and Trademark Office

---

1 Mail Stop Petition, Commissioner for Patents, United States Patent and Trademark Office, P.O. Box 1450, Alexandria, VA, 22313-1450.
2 Customer Window, Randolph Building, 401 Dulaney Street, Alexandria, VA, 22314.
3 (571) 273-8300- please note this is a central facsimile number.

UNITED STATES PATENT AND TRADEMARK OFFICE

COMMISSIONER FOR PATENTS
UNITED STATES PATENT AND TRADEMARK OFFICE
P.O. BOX 1450
ALEXANDRIA, VA 22313-1450
WWW.USPTO.GOV

Paper No. None

Ching-Chun Tsai
P.O. Box No. 6-57
Junghe, Taipei 235 TAIWAN

COPY MAILED

AUG 16 2006

OFFICE OF PETITIONS

In re Application of :
Ching-Chun Tsai :
Application No. 10/685,596 : DECISION ON RENEWED PETITION
Filed: October 16, 2003 : UNDER 37 C.F.R. §1.181(A)
Title: INFLATING TOY :

This is a decision on the renewed petition filed on June 28, 2006, under 37 C.F.R. §1.181(a), to withdraw the holding of abandonment.

BACKGROUND

The above-identified application became abandoned for failure to reply in a timely manner to the non-final Office action, mailed April 7, 2004, which set a shortened statutory period for reply of three (3) months. No response was received, and no extensions of time under the provisions of 37 C.F.R. §1.136(a) were requested. Accordingly, the above-identified application became abandoned on July 8, 2004. A notice of abandonment was mailed on October 19, 2004.

The original petition was filed on May 3, 2005, and was dismissed via the mailing of a decision on May 24, 2006. Petitioner had alleged that the non-final Office action of April 7, 2004 was not received.

ANALYSIS

The decision on the original petition set forth the following:

Petitioner has established that the Office communication was not received. The petition contains a statement from the practitioner stating that the Office communication was not received. Petitioner has further submitted an attestation to the fact that a search of the file jacket and docket records indicates that the Office communication was not received, as well as a copy of the docket record where the non-received Office communication would have been entered had it been received and docketed.

However, it is noted that Petitioner has a similar petition pending before the Office, where it is alleged that an Office action associated with application number 10/411,260 was not received. On renewed petition, Petitioner must state how many similar petitions he currently has pending before the Office and how frequently he encounters this problem in his practice, as it appears that he might have a history of not receiving Office actions.

The Delgar showing, described in the decision on original petition, may not be sufficient if there are circumstances that point to a conclusion that the Office action may have been lost after receipt rather than a conclusion that the Office action was lost in the mail (e.g., if the practitioner has a history of not receiving Office actions).

With this renewed petition, Petitioner has submitted a statement from his "local agent," which establishes that he presently has twelve other petitions pending before the Office, where an Office communication was not received.

It is clear that Petitioner has a history of not receiving Office actions, and as such, the establishment of the failure to receive the Office communication is insufficient to justify the holding of abandonment. Consequently, the present petition cannot be granted.

CONCLUSION

For the reasons discussed above, the petition under 37 C.F.R. §1.181 must be **DISMISSED**.

Petitioner will not be able to establish that the holding of abandonment should be withdrawn, and as such, Petitioner may wish to consider filing a petition under either 37 C.F.R. §1.137(a) and/or (b).

Any subsequent petition should indicate in a prominent manner that the attorney handling this matter is Paul Shanoski, and may be submitted by mail[1], hand-delivery[2], or facsimile[3].

Telephone inquiries regarding *this decision* should be directed to the undersigned at (571) 272-3225[4]. All other inquiries concerning examination procedures or status of the application should be directed to the Technology Center.

Paul Shanoski
Senior Attorney
Office of Petitions
United States Patent and Trademark Office

---

1 Mail Stop Petition, Commissioner for Patents, United States Patent and Trademark Office, P.O. Box 1450, Alexandria, VA, 22313-1450.
2 Customer Window, Randolph Building, 401 Dulaney Street, Alexandria, VA, 22314.
3 (571) 273-8300- please note this is a central facsimile number.
4 Petitioner will note that all practice before the Office should be in writing, and the action of the Office will be based exclusively on the written record in the Office. See 37 C.F.R. §1.2. As such, Petitioner is reminded that no telephone discussion may be controlling or considered authority for Petitioner's further action(s).

UNITED STATES PATENT AND TRADEMARK OFFICE

COMMISSIONER FOR PATENTS
UNITED STATES PATENT AND TRADEMARK OFFICE
P.O. BOX 1450
ALEXANDRIA, VA 22313-1450
WWW.USPTO.GOV

Paper No.

Ching-Chun Tsai
P.O. Box No. 6-57
Junghe, Taipei 235 TAIWAN

COPY MAILED

FEB 19 2008

OFFICE OF PETITIONS

In re Application of	:	
Ching-Chun Tsai	:	DECISION ON SECOND RENEWED
Application No. 10/685,596	:	PETITION UNDER
Filed: October 16, 2003	:	37 C.F.R. § 1.181(A)
Title: INFLATING TOY	:	

This is a decision on the second renewed petition filed on October 24, 2007, pursuant to 37 C.F.R. § 1.181(a), to withdraw the holding of abandonment.

BACKGROUND

The above-identified application became abandoned for failure to reply in a timely manner to the non-final Office action, mailed April 7, 2004, which set a shortened statutory period for reply of three months. No response was received, and no extensions of time under the provisions of 37 C.F.R. § 1.136(a) were requested. Accordingly, the above-identified application became abandoned on July 8, 2004. A notice of abandonment was mailed on October 19, 2004.

An original petition was filed on May 3, 2005, and was dismissed via the mailing of a decision on May 24, 2006. A renewed petition was filed on June 28, 2006, and was dismissed via the mailing of a decision on August 16, 2006.

With this second renewed petition, Petitioner has established that the non-final Office action of April 7, 2004 was not received.

Consequently, the petition is **GRANTED**. The holding of abandonment is hereby withdrawn.

The Technology Center will be notified of this decision. The Technology Center's support staff will re-mail the non-final Office action of April 7, 2004, and will set a new period for response.

Telephone inquiries regarding *this decision* should be directed to the undersigned at (571) 272-3225[1]. All other inquiries concerning examination procedures or status of the application should be directed to the Technology Center.

/Paul Shanoski/
Paul Shanoski
Senior Attorney
Office of Petitions

1 Petitioner will note that all practice before the Office should be in writing, and the action of the Office will be based exclusively on the written record in the Office. See 37 C.F.R. § 1.2. As such, Petitioner is reminded that no telephone discussion may be controlling or considered authority for Petitioner's further action(s).

UNITED STATES PATENT AND TRADEMARK OFFICE

Commissioner for Patents
United States Patent and Trademark Office
P.O. Box 1450
Alexandria, VA 22313-1450
www.uspto.gov
DIW 03-05

STEPHEN D. HARPER
HENKEL CORPORATION
LAW DEPARTMENT
2500 RENAISSANCE BLVD., SUITE 200
GULPH MILLS PA 19406

COPY MAILED

MAR 1 5 2005

OFFICE OF PETITIONS

In re Application of :
Roberto Pavez Aranguiz :
Application No. 10/685,613 : ON PETITION
Filed: 15 October, 2003 :
Attorney Docket No. H 3680A US :

This is a decision on the petition under 37 CFR 1.137(b),[1] filed on 18 February, 2005, to revive the above-identified application.

The petition is **GRANTED**.

This application became abandoned on 14 November, 2004, for failure to file a proper response to the final Office action mailed on 13 August, 2004, which set a three (3) month shortened

---

[1]Effective December 1, 1997, the provisions of 37 CFR 1.137(b) now provide that where the delay in reply was unintentional, a petition may be filed to revive an abandoned application or a lapsed patent pursuant to 37 CFR 1.137(b). A grantable petition filed under the provisions of 37 CFR 1.137(b) must be accompanied by:

(1) the required reply, unless previously filed. In a nonprovisional application abandoned for failure to prosecute, the required reply may be met by the filing of a continuing application. In a nonprovisional application filed on or after June 8, 1995, and abandoned for failure to prosecute, the required reply may also be met by the filing of a request for continued examination in compliance with § 1.114. In an application or patent, abandoned or lapsed for failure to pay the issue fee or any portion thereof, the required reply must be the payment of the issue fee or any outstanding balance thereof. In an application abandoned for failure to pay the publication fee, the required reply must include payment of the publication fee.

(2) the petition fee as set forth in 37 CFR 1.17(m);

(3) a statement that the entire delay in filing the required reply from the due date for the reply until the filing of a grantable petition pursuant to 37 CFR 1.137(b) was unintentional. The Commissioner may required additional information where there is a question whether the delay was unintentional; and

(4) any terminal disclaimer (and fee as set forth in 37 CFR 1.20(d)) required pursuant to 37 CFR 1.137(c)).

statutory period for reply. No extensions of the time for reply in accordance with 37 CFR 1.136(a) were obtained. The filing of the present petition precedes the mailing of Notice of Abandonment.

Petitioner has filed a Notice of Appeal as the required reply.

The statement contained in the instant petition does not set forth that the entire delay from the due date of the required reply to the date of the filing of a grantable petition was unintentional as required by 37 CFR 1.137(b)(3). However, the statement contained in the instant petition is being so construed. Petitioner **must** notify the Office if this is not a correct interpretation.

The Notice of Appeal filed 18 February, 2005, has been entered and made of record. Accordingly, the two (2)-month period for filing the Appeal Brief, in triplicate, accompanied by the fee required by law, runs from the date of this decision.

The petition fee of $1,500.00 and Notice of Appeal fee of $500.00 will be charged to counsel's deposit account, No. 01-1250, as authorized in the petition and Notice of Appeal.

The application will be referred to Technology Center Art Unit 1713 for further processing.

Telephone inquiries concerning this matter may be directed to the undersigned at (571)272-3231.

DWood

Douglas I. Wood
Senior Petitions Attorney
Office of Petitions

UNITED STATES PATENT AND TRADEMARK OFFICE

UNITED STATES DEPARTMENT OF COMMERCE
United States Patent and Trademark Office
Address: COMMISSIONER FOR PATENTS
P.O. Box 1450
Alexandria, Virginia 22313-1450
www.uspto.gov

APPLICATION NO.	FILING DATE	FIRST NAMED INVENTOR	ATTORNEY DOCKET NO.	CONFIRMATION NO.
10/685,613	10/15/2003	Roberto Pavez Aranguiz	H 3680A US	5097

423 7590 07/25/2008

HENKEL CORPORATION
1001 TROUT BROOK CROSSING
ROCKY HILL, CT 06067

EXAMINER	
CHEUNG, WILLIAM K	

ART UNIT	PAPER NUMBER
1796	

MAIL DATE	DELIVERY MODE
07/25/2008	PAPER

Please find below and/or attached an Office communication concerning this application or proceeding.

The time period for reply, if any, is set in the attached communication.

UNITED STATES PATENT AND TRADEMARK OFFICE

Commissioner for Patents
United States Patent and Trademark Office
P.O. Box 1450
Alexandria, VA 22313-1450
www.uspto.gov

caf

Mailed: 7-25-08

In re application of	:	
ARANGUIZ	:	DECISION ON
Serial No. 10/685,613	:	PETITION
Filed: October 15, 2003	:	
For: FILLER CONTAINING POLYMER DISPERSION, METHOD FOR ITS PRODUCTION AND USE	:	

This is a decision on the PETITION TO THE DIRECTOR UNDER 37 CFR 1.181 REQUESTING WITHDRAWAL OF THE FINAL REJECTION mailed November 16, 2007.

On November 16, 2007 final office action was mailed to applicants rejecting claims 18-39. An amendment after final was filed January 15, 2008. An advisory action was mailed February 13, 2008. A second amendment after final was filed March 25, 2008. A second advisory action was mailed April 10, 2008. In this second advisory action, it is noted that the rejection of claim 19 is withdrawn and the claim is listed under "Claims objected to:". A third amendment after final was mailed April 24, 2008. A fourth amendment after final was filed on April 28, 2008. A third advisory action was mailed May 9, 2008. A fourth advisory action was mailed May 12, 2008.

On May 15, 2008 the instant petition under 37 CFR 1.181 was filed to formally request the withdrawal of finality of the November 16, 2007 office action.

Applicant's position for the withdrawal of the finality is that, presently, the record shows that claim 19 is neither rejected over art nor allowable. If a further search is needed, the finality of the 11/16/07 action is improper and should be withdrawn so that such search can be done. If claim 19 is allowable over the art, the Applicant's 4/28/08 amendment, especially in view of Applicant's offer to cancel claims outside of the claim 18 family, is sufficient to overcome any proper objection.

DECISION

The record establishes that the examiner has withdrawn the art rejection of claim 19. Claim 19 however is a dependent claim and can not be indicated "allowable" until such time it is placed in independent form. The third amendment after final (not entered) appears to put claim 19 into allowable condition, but does not cancel other rejected claims, thus the application was not put into condition for allowance. The fourth amendment after final (not entered) appears to put

claim 18 into condition for allowance, but raises new issues by amending other claims in the application.

Although the petition refers to a verbal offer on May 7, 2008 to cancel all claims not dependent on claim 18 (presumably including the limitations of claim 19), such an amendment was not submitted. Further, there is no interview summary present with regard to this offer.

Accordingly, the finality of the November 16, 2007 office action was proper and the petition is **DENIED.**

JMStone

Jacqueline M. Stone, Director
Technology Center 1700
Chemical and Materials Engineering

HENKEL CORPORATION
1001 TROUT BROOK CROSSING
ROCKY HILL CT 06067

UNITED STATES PATENT AND TRADEMARK OFFICE

UNITED STATES DEPARTMENT OF COMMERCE
United States Patent and Trademark Office
Address: COMMISSIONER FOR PATENTS
P.O. Box 1450
Alexandria, Virginia 22313-1450
www.uspto.gov

APPL NO.	FILING OR 371 (c) DATE	ART UNIT	FIL FEE REC'D	ATTY.DOCKET NO	DRAWINGS	TOT CLMS	IND CLMS
10/685,627	10/14/2003	3632	856	200310121-1		16	4

CONFIRMATION NO. 5109

22879
HEWLETT PACKARD COMPANY
P O BOX 272400, 3404 E. HARMONY ROAD
INTELLECTUAL PROPERTY ADMINISTRATION
FORT COLLINS, CO 80527-2400

CORRECTED FILING RECEIPT

OC000000016263463

Date Mailed: 06/13/2005

Receipt is acknowledged of this regular Patent Application. It will be considered in its order and you will be notified as to the results of the examination. Be sure to provide the U.S. APPLICATION NUMBER, FILING DATE, NAME OF APPLICANT, and TITLE OF INVENTION when inquiring about this application. Fees transmitted by check or draft are subject to collection. Please verify the accuracy of the data presented on this receipt. **If an error is noted on this Filing Receipt, please mail to the Commissioner for Patents P.O. Box 1450 Alexandria Va 22313-1450. Please provide a copy of this Filing Receipt with the changes noted thereon. If you received a "Notice to File Missing Parts" for this application, please submit any corrections to this Filing Receipt with your reply to the Notice. When the USPTO processes the reply to the Notice, the USPTO will generate another Filing Receipt incorporating the requested corrections (if appropriate).**

Applicant(s)

David Quijano, Magnolia, TX;

Power of Attorney: The patent practitioners associated with Customer Number **022879**.

Domestic Priority data as claimed by applicant

Foreign Applications

If Required, Foreign Filing License Granted: 03/31/2004

The country code and number of your priority application, to be used for filing abroad under the Paris Convention, is US10/685,627

Projected Publication Date: Not Applicable

Non-Publication Request: No

Early Publication Request: No

Title

BEST AVAILABLE COPY

Computer display device and method of operation

Preliminary Class

248

LICENSE FOR FOREIGN FILING UNDER
Title 35, United States Code, Section 184
Title 37, Code of Federal Regulations, 5.11 & 5.15

GRANTED

The applicant has been granted a license under 35 U.S.C. 184, if the phrase "IF REQUIRED, FOREIGN FILING LICENSE GRANTED" followed by a date appears on this form. Such licenses are issued in all applications where the conditions for issuance of a license have been met, regardless of whether or not a license may be required as set forth in 37 CFR 5.15. The scope and limitations of this license are set forth in 37 CFR 5.15(a) unless an earlier license has been issued under 37 CFR 5.15(b). The license is subject to revocation upon written notification. The date indicated is the effective date of the license, unless an earlier license of similar scope has been granted under 37 CFR 5.13 or 5.14.

This license is to be retained by the licensee and may be used at any time on or after the effective date thereof unless it is revoked. This license is automatically transferred to any related applications(s) filed under 37 CFR 1.53(d). This license is not retroactive.

The grant of a license does not in any way lessen the responsibility of a licensee for the security of the subject matter as imposed by any Government contract or the provisions of existing laws relating to espionage and the national security or the export of technical data. Licensees should apprise themselves of current regulations especially with respect to certain countries, of other agencies, particularly the Office of Defense Trade Controls, Department of State (with respect to Arms, Munitions and Implements of War (22 CFR 121-128)); the Office of Export Administration, Department of Commerce (15 CFR 370.10 (j)); the Office of Foreign Assets Control, Department of Treasury (31 CFR Parts 500+) and the Department of Energy.

NOT GRANTED

No license under 35 U.S.C. 184 has been granted at this time, if the phrase "IF REQUIRED, FOREIGN FILING LICENSE GRANTED" DOES NOT appear on this form. Applicant may still petition for a license under 37 CFR 5.12, if a license is desired before the expiration of 6 months from the filing date of the application. If 6 months has lapsed from the filing date of this application and the licensee has not received any indication of a secrecy order under 35 U.S.C. 181, the licensee may foreign file the application pursuant to 37 CFR 5.15(b).

UNITED STATES PATENT AND TRADEMARK OFFICE

UNITED STATES DEPARTMENT OF COMMERCE
United States Patent and Trademark Office
Address: COMMISSIONER FOR PATENTS
P.O. Box 1450
Alexandria, Virginia 22313-1450
www.uspto.gov

BACHMAN & LAPOINTE, P.C.
900 CHAPEL STREET
SUITE 1201
NEW HAVEN, CT 06510

Mail Date: 04/21/2010

Applicant	: James T. Beals	: DECISION ON REQUEST FOR
Patent Number	: 7575039	: RECALCULATION of PATENT
Issue Date	: 08/18/2009	: TERM ADJUSTMENT IN VIEW
Appliction No	: 10/685,631	: OF WYETH AND NOTICE OF INTENT TO
Filed	: 10/15/2003	: ISSUE CERTIFICATE OF CORRECTION
		:

The Request for Recalculation is **GRANTED** to the extent indicated.

The patent term adjustment has been determined to be **662** days. The USPTO will *sua sponte* issue a certificate of correction reflecting the amount of PTA days determined by the recalculation.

Prior to the issuance of the certificate of correction, the USPTO will afford patentee an opportunity to be heard and request reconsideration. Accordingly, patentee has **one month or thirty (30) days**, whichever is longer, to file a request for reconsideration of this patent term adjustment calculation. See 35 U.S.C. 154(b)(3)(B)(ii) and 37 CFR 1.322(a)(4). No extensions of time will be granted under 37 CFR 1.136.

Patentee should use document code PET.OP if electronically filing a request for reconsideration of this patent term adjustment calculation. The patentee must also include the information required by 37 CFR 1.705(b)(2) and the fee required by 37 CFR 1.18(e). If patentee does not file a timely request for reconsideration of this patent term adjustment calculation including the information required by 37 CFR 1.705(b)(2) and the fee required by 37 CFR 1.18(e), the USPTO will issue a certificate of correction reflecting the PTA determination noted above.

Patentee should be aware that in order to preserve the right to review in the United States District Court for the District of Columbia of the USPTO patent term adjustment determination, patentee must ensure that he or she also take the steps required under 35 U.S.C. 154(b)(4)(A) in a timely manner. Nothing in the request for recalculation should be construed as providing an alternative time frame for commencing a civil action under 35 U.S.C. 154(b)(4)(A).

Any questions concerning this decision should be directed to the Office of Patent Legal Administration at 571-272-7702.

UNITED STATES PATENT AND TRADEMARK OFFICE

COMMISSIONER FOR PATENTS
UNITED STATES PATENT AND TRADEMARK OFFICE
P.O. BOX 1450
ALEXANDRIA, VA 22313-1450
www.uspto.gov
DIW Nov-05

US CORPORATIONS, INC.
630 NEPTUNE AVE.
ENCINITAS CA 92024

COPY MAILED

NOV 17 2005

OFFICE OF PETITIONS

In re Application of	:	
Seay et al.	:	LETTER DISMISSING PETITION
Application No. 10/685,642	:	
Filed: 15 October, 2003	:	
For: MAGNETIC HOOK SWTICH	:	

This is a communication in response to the paper styled as a petition, filed on 28 September, 2005, under 37 CFR 1.137(b)[1] to revive the above-identified application.

The petition is dismissed for the reasons stated below.

---

[1] Effective December 1, 1997, the provisions of 37 CFR 1.137(b) now provide that where the delay in reply was unintentional, a petition may be filed to revive an abandoned application or a lapsed patent pursuant to 37 CFR 1.137(b). A grantable petition filed under the provisions of 37 CFR 1.137(b) must be accompanied by:

(1) the required reply, unless previously filed. In a nonprovisional application abandoned for failure to prosecute, the required reply may be met by the filing of a continuing application. In a nonprovisional application filed on or after June 8, 1995, and abandoned for failure to prosecute, the required reply may also be met by the filing of a request for continued examination in compliance with § 1.114. In an application or patent, abandoned or lapsed for failure to pay the issue fee or any portion thereof, the required reply must be the payment of the issue fee or any outstanding balance thereof. In an application abandoned for failure to pay the publication fee, the required reply must include payment of the publication fee.

(2) the petition fee as set forth in 37 CFR 1.17(m);

(3) a statement that the entire delay in filing the required reply from the due date for the reply until the filing of a grantable petition pursuant to 37 CFR 1.137(b) was unintentional. The Commissioner may required additional information where there is a question whether the delay was unintentional; and

(4) any terminal disclaimer (and fee as set forth in 37 CFR 1.20(d)) required pursuant to 37 CFR 1.137(c)).

This application became abandoned on 23 March, 2004, for failure to file a timely reply to the Notice to File Missing Parts of Nonprovisional Application, mailed on 22 January, 2004, which set a two (2) month shortened period for reply. Notice of Abandonment was mailed on 17 November, 2004.

The petition, which is signed by inventor Scott Seay, cannot be considered on the merits because it is not properly signed. Specifically, 37 CFR 1.4 requires that all papers filed in the USPTO must be signed by either a registered patent attorney or all of the inventors in an application. As this application contains an executed declaration listing Scott Seay and Darrell L. Eddings as joint inventors, the petition must be signed by both inventors or by their representative.

Applicants should file a new petition signed by both joint inventors or their representative. No additional petition fee is due.

A reply to this communication should be submitted within two (2) weeks of receipt of this communication.

The address listed on the petition is different than the correspondence address of record. A courtesy copy of this decision will be mailed to the address listed on the petition. All future correspondence, however, will be mailed solely to the address of record. If a change of correspondence address is desired, applicants should complete the enclosed change of correspondence form and return it to the USPTO.

Further correspondence with respect to this matter should be addressed as follows:

By mail: Mail Stop Petition
Commissioner for Patents
P.O. Box 1450
Alexandria, VA 22313-1450

By FAX: (571) 273-8300
Attn: Office of Petitions

By hand: Customer Service Window
Mail Stop Petition
Randolph Building
401 Dulany Street
Alexandria, VA 22314

Telephone inquiries concerning this matter may be directed to the undersigned at (571) 272-3231.

D Wood

Douglas I. Wood
Senior Petitions Attorney
Office of Petitions

cc: Scott Seay
1590 Weber Industrial Dr, Suite 100A
Cumming GA 30041

Encl: Change of Correspondence Address--Application

UNITED STATES PATENT AND TRADEMARK OFFICE

Commissioner for Patents
United States Patent and Trademark Office
P.O. Box 1450
Alexandria, VA 22313-1450
www.uspto.gov
DIW Dec-05

US CORPORATIONS, INC.
630 NEPTUNE AVE.
ENCINITAS CA 92024

COPY MAILED

DEC 21 2005

OFFICE OF PETITIONS

In re Application of :
Seay et al. : ON PETITION
Application No. 10/685,642 :
Filed: 15 October, 2003 :
For: MAGNETIC HOOK SWTICH :

This is a decision on the petition filed on 8 December, 2005, under 37 CFR 1.137(b),[1] to revive the above-identified application.

The petition is **GRANTED**

This application became abandoned on 23 March, 2004, for failure to file a timely reply to the Notice to File Missing Parts of Nonprovisional Application, mailed on 22 January, 2004, which set a two (2) month shortened period for reply. Notice of Abandonment was mailed on 17 November, 2004. The letter styled as a petition was filed on 28 September, 2005. An Office letter

---

[1] Effective December 1, 1997, the provisions of 37 CFR 1.137(b) now provide that where the delay in reply was unintentional, a petition may be filed to revive an abandoned application or a lapsed patent pursuant to 37 CFR 1.137(b). A grantable petition filed under the provisions of 37 CFR 1.137(b) must be accompanied by:

(1) the required reply, unless previously filed. In a nonprovisional application abandoned for failure to prosecute, the required reply may be met by the filing of a continuing application. In a nonprovisional utility or plant application filed on or after June 8, 1995, and abandoned for failure to prosecute, the required reply may also be met by the filing of a request for continuing examination in compliance with § 1.114. In an application or patent, abandoned or lapsed for failure to pay the issue fee or any portion thereof, the required reply must be the payment of the issue fee or any outstanding balance thereof. In an application, abandoned for failure to pay the publication fee, the required reply must include payment of the publication fee.

(2) the petition fee as set forth in 37 CFR 1.17(m);

(3) a statement that the entire delay in filing the required reply from the due date for the reply until the filing of a grantable petition pursuant to 37 CFR 1.137(b) was unintentional. The Commissioner may required additional information where there is a question whether the delay was unintentional; and

(4) any terminal disclaimer (and fee as set forth in 37 CFR 1.20(d)) required pursuant to 37 CFR 1.137(c)).

in response, stating the petition must be signed by all of the inventors, was mailed on 17 November, 2005.

On 28 September, 2005, petitioners submitted the additional filing fee and surcharge, petition fee, and abstract.

The address listed on the petition is different than the correspondence address of record. A courtesy copy of this decision will be mailed to the address listed on the petition. All future correspondence, however, will be mailed solely to the address of record.

The application is being referred to the Office of Initial Patent Examination for further processing.

Telephone inquiries concerning this matter may be directed to the undersigned at (571) 272-3231.

Douglas I. Wood
Senior Petitions Attorney
Office of Petitions

cc: Scott Seay
1370 Weber Industrial Dr
Cumming GA 30041

UNITED STATES PATENT AND TRADEMARK OFFICE

Commissioner for Patents
United States Patent and Trademark Office
P.O. Box 1450
Alexandria, VA 22313-1450
www.uspto.gov

COPY MAILED

OCT 24 2006

OFFICE OF PETITIONS

CANTOR COLBURN LLP
55, GRIFFIN ROAD SOUTH
BLOOMFIELD CT 06002

In re Patent No. 6,953,050 :
Issue Date: October 11, 2005 :
Application No. 10/685,645 : NOTICE
Filed: October 15, 2003 :
Attorney Docket No. MOD-0053 :

This is a notice regarding your request for acceptance of a fee deficiency submission under 37 CFR 1.28. On September 1, 1998, the Court of Appeals for the Federal Circuit held that 37 CFR 1.28(c) is the sole provision governing the time for correction of the erroneous payment of the issue fee as a small entity. **See DH Technology v. Synergystex International, Inc. 154 F.3d 1333, 47 USPQ2d 1865 (Fed. Cir. Sept. 1, 1998).**

The Office no longer investigates or rejects original or reissue applications under 37 CFR 1.56. **1098 Off. Gaz. Pat. Office 502 (January 3, 1989).** Therefore, nothing in this Notice is intended to imply that an investigation was done.

Your fee deficiency submission under 37 CFR 1.28 is hereby **ACCEPTED.**

This application no longer qualifies for small entity status. Accordingly, all future fees must be paid at the large entity rate.

Inquiries related to this communication should be directed to the undersigned at (571) 272-3208.

Karen Creasy
Petitions Examiner
Office of Petitions

UNITED STATES PATENT AND TRADEMARK OFFICE

Commissioner for Patents
United States Patent and Trademark Office
P.O. Box 1450
Alexandria, VA 22313-1450
www.uspto.gov

THOMAS THIBAULT
527 10TH AVE
SAN DIEGO, CA 92101

MAILED

MAY 14 2009

OFFICE OF PETITIONS

In re Application of
Donald A. BISTLINE
Application No. 10/685,662
Filed: October 14, 2003
Attorney Docket No. **DON 3**

DECISION ON PETITION
UNDER 37 CFR 1.137(b)

This is a decision on the petition under the unintentional provisions of 37 CFR 1.137(b), filed February 9, 2009 and re-submitted March 13, 2009, to revive the above-identified application.

The petition is **GRANTED**.

This application became abandoned for failure to timely pay the issue fee and publication fees on or before October 16, 2008, as required by the Notice of Allowance and Fee(s) Due, mailed July 16, 2008. Accordingly, the date of abandonment of this application is October 17, 2008.

The petition satisfies the requirements of 37 CFR 1.137(b) in that petitioner has supplied (1) the reply in the form of payment of the issue fee of $755 and publication fee of $300, (2) the petition fee of $810; and (3) an adequate statement of unintentional delay.

Telephone inquiries concerning this decision should be directed to Monica A. Graves at (571) 272-7253.

This application is being referred to the Office of Data Management for processing into a patent.

Brian W. Brown
Petitions Examiner
Office of Petitions

UNITED STATES PATENT AND TRADEMARK OFFICE

COMMISSIONER FOR PATENTS
UNITED STATES PATENT AND TRADEMARK OFFICE
P.O. BOX 1450
ALEXANDRIA, VA 22313-1450
www.uspto.gov

IPSG, P.C.
P. O. Box 700640
San Jose, CA 95170-0640

COPY MAILED

JUL 12 2005

OFFICE OF PETITIONS

In re Application of :
Helen Zhu, et al. :
Application No. 10/685,675 : ON PETITION
Filed: October 14, 2003 :
Attorney Docket No. P-1058-LAM-Rao :

This is a decision on the petition under 37 CFR 1.137(b), filed June 16, 2005, to revive the above-identified application.

The petition is **GRANTED**.

The petition satisfies the requirements of 37 CFR 1.137(b) in that petitioner has supplied (1) the reply in the form of a Request for Continued Examination (RCE) under 37 CFR 1.114; (2) the petition fee of $1500; and (3) an adequate statement of unintentional delay.

This application is being revived for consideration of the RCE.

Telephone inquiries concerning this decision should be directed to the undersigned at (571) 272-3223.

The application file is being referred to Technology Center 2800.

Marianne E. Jenkins
Petitions Examiner
Office of Petitions

UNITED STATES PATENT AND TRADEMARK OFFICE

UNITED STATES DEPARTMENT OF COMMERCE
United States Patent and Trademark Office
Address: COMMISSIONER FOR PATENTS
P.O. Box 1450
Alexandria, Virginia 22313-1450
www.uspto.gov

APPLICATION NO.	FILING DATE	FIRST NAMED INVENTOR	ATTORNEY DOCKET NO.	CONFIRMATION NO.
10/685,705	10/16/2003	Ambati Jayakrishna	50229-415	6795

7590 12/24/2008

McDERMOTT, WILL & EMERY
600 13th Street, N.W.
Washington, DC 20005-3096

EXAMINER	
FALK, ANNE MARIE	
ART UNIT	**PAPER NUMBER**
1632	
MAIL DATE	**DELIVERY MODE**
12/24/2008	PAPER

Please find below and/or attached an Office communication concerning this application or proceeding.

The time period for reply, if any, is set in the attached communication.

UNITED STATES DEPARTMENT OF COMMERCE
U.S. Patent and Trademark Office
Address: COMMISSIONER FOR PATENTS
P.O. Box 1450
Alexandria, Virginia 22313-1450

APPLICATION NO./ CONTROL NO.	FILING DATE	FIRST NAMED INVENTOR / PATENT IN REEXAMINATION	ATTORNEY DOCKET NO.
10685705	10/16/03	JAYAKRISHNA, AMBATI	50229-415

McDERMOTT, WILL & EMERY
600 13th Street, N.W.
Washington, DC 20005-3096

EXAMINER
Anne-Marie Falk, Ph.D.

ART UNIT	PAPER
1632	20081219

DATE MAILED:

Please find below and/or attached an Office communication concerning this application or proceeding.

Commissioner for Patents

The petition filed April 18, 2008 requesting the acceptance of color drawings is granted. The color drawings filed on October 30, 2008 are accepted.

Any inquiry concerning this communication or earlier communications from the examiner should be directed to Anne-Marie Falk whose telephone number is (571) 272-0728. The examiner can normally be reached Monday through Friday from 9:00 AM to 5:30 PM.

If attempts to reach the examiner by telephone are unsuccessful, the examiner's supervisor, Peter Paras, can be reached on (571) 272-4517. The central official fax phone number for the organization where this application or proceeding is assigned is (571) 273-8300.

Any inquiry of a general nature or relating to the status of this application or proceeding should be directed to (571) 272-0547.

/Peter Paras, Jr./
Supervisory Patent Examiner, Art Unit 1632

UNITED STATES PATENT AND TRADEMARK OFFICE

Commissioner for Patents
United States Patent and Trademark Office
P.O. Box 1450
Alexandria, VA 22313-1450
www.uspto.gov

BAKER BOTTS, LLP
2001 ROSS AVENUE
SUITE 600
DALLAS, TX 75201-2980

COPY MAILED

MAY 29 2009

OFFICE OF PETITIONS

In re Application of	:	
Craig H. Rowland	:	
Application No. 10/685,726	:	DECISION GRANTING PETITION
Filed: October 15, 2003	:	UNDER 37 CFR 1.313(c)(2)
Attorney Docket No. 062891.1166	:	

This is a decision on the petition under 37 CFR 1.313(c)(2), filed May 27, 2009, to withdraw the above-identified application from issue after payment of the issue fee.

The petition is **GRANTED**.

The above-identified application is withdrawn from issue for consideration of a submission under 37 CFR 1.114 (request for continued examination). *See* 37 CFR 1.313(c)(2).

Petitioner is advised that the issue fee paid on April 9, 2009 cannot be refunded. If, however, this application is again allowed, petitioner may request that it be applied towards the issue fee required by the new Notice of Allowance.[1]

Telephone inquiries regarding this decision should be directed to undersigned at (571) 272-1642. All other inquiries concerning the examination or status of this application should be directed to the Technology Center.

This application is being referred to Technology Center AU 2131 for processing of the request for continued examination under 37 CFR 1.114 and for consideration of the concurrently filed information disclosure statement.

/AMW/
April M, Wise
Petitions Examiner
Office of Petitions

---

[1] *The request to apply the issue fee to the new Notice may be satisfied by completing and returning the new Part B – Fee(s) Transmittal Form (along with any balance due at the time of submission). Petitioner is advised that the Issue Fee Transmittal Form must be completed and timely submitted to avoid abandonment of the application.*

UNITED STATES PATENT AND TRADEMARK OFFICE

Commissioner for Patents
United States Patent and Trademark Office
P.O. Box 1450
Alexandria, VA 22313-1450
www.uspto.gov

SAWYER LAW GROUP LLP
P O BOX 51418
PALO ALTO, CA 94303

COPY MAILED

FEB 0 4 2008

OFFICE OF PETITIONS

In re Application of	:	
KAROUBALIS, Theodore et al.	:	
Application No. 10/685,727	:	DECISION ON PETITION
Filed: October 14, 2003	:	TO WITHDRAW
Attorney Docket No. **2819P**	:	FROM RECORD
	:	

This is a decision on the Request to Withdraw as attorney or agent of record under 37 C.F.R. § 1.36(b), filed January 02, 2008.

The request is **APPROVED**.

A grantable request to withdraw as attorney/agent of record must be signed by every attorney/agent seeking to withdraw or contain a clear indication that one attorney is signing on behalf of another/others. A request to withdraw will not be approved unless at least 30 (thirty) days would remain between the date of approval and the later of the expiration date of a time to file a response or the expiration date of the maximum time period which can be extended under 37 C.F.R. § 1.136(a).

The request was signed by Joseph A. Sawyer, Jr. on behalf of all attorneys of record who are associated. All attorneys/agents associated have been withdrawn. Applicant is reminded that there is no attorney of record at this time.

The request to change the correspondence of record is not acceptable as the requested correspondence address is not that of: (1) the first named signing inventor; or (2) an intervening assignee of the entire interest under 37 C.F.R 3.71. All future communications from the Office will be directed to the first named signing inventor at the first copied address below until otherwise properly notified by the applicant.

Telephone inquiries concerning this decision should be directed to Tredelle Jackson at 571-272-2783.

Monica A. Graves
Petitions Examiner
Office of Petitions

cc: **THEODORE KAROUBALIS**
APOLLONIAS 25, PIREUS, ATHENS
GREECE, GR-8541

cc: **SCHWEGMAN, LUNDBERG & WOESSNER / ATMEL**
P.O. BOX 2938
MINNEAPOLIS, MN 55402

UNITED STATES PATENT AND TRADEMARK OFFICE

COMMISSIONER FOR PATENTS
UNITED STATES PATENT AND TRADEMARK OFFICE
P.O. BOX 1450
ALEXANDRIA, VA 22313-1450
www.uspto.gov

FITZPATRICK CELLA (CATALENT)
30 ROCKEFELLER PLAZA
NEW YORK, NY 10112

COPY MAILED

NOV 0 6 2007

OFFICE OF PETITIONS

In re Application of :
Richard Green, et al. :
Application No. 10/685,728 : ON PETITION
Filed: October 14, 2003 :
Attorney Docket No. RPS6037C1 :

This is a decision on the petition under 37 CFR 1.137(b), filed June 29, 2007, to revive the above-identified application.

The petition is **GRANTED**.

The application became abandoned for failure to timely file a reply within the meaning of 37 CFR 1.113 to the final Office action of October 19, 2006. This decision precedes the mailing of a Notice of Abandonment. On June 29, 2007, the present petition was filed.
The proposed reply required for consideration of a petition to revive must be a Notice of Appeal (and appeal fee required by 37 CFR 41.20(b)(2), an amendment that *prima facie* places the application in condition for allowance, a Request for Continued Examination and submission (37 CFR 1.114), or the filing of a continuing application under 37 CFR 1.53(b). See MPEP 711.03(c)(II)(A)(2).

The present petition satisfies the requirements of 37 CFR 1.137(b) in that petitioner has supplied (1) the reply in the form of a Request for Continued Examination (RCE) under 37 CFR 1.114, including the fee of $790; (2) the petition fee of $1,500; and (3) an adequate statement of unintentional delay.

Extensions of time under 37 CFR 1.136 are available only if asked for prior to or with the response. In no case, however, may an applicant respond later than the maximum time period set by statute. Accordingly, if the question of abandonment arises when the provisions of 37 CFR 1.136 can no longer be used, then the application is abandoned when the unextended time for response has expired. Since, no extension of time fees are due on a petition for revival, the $1,020 extension fees are being credited to counsel's deposit account.

This application is being referred to Technology Center AU 1618 for further processing of the RCE filed June 29, 2007 in accordance with 37 CFR 1.114.

Telephone inquiries concerning this decision should be directed to the undersigned at (571) 272-3204. Inquiries relating to further prosecution should be directed to the Technology Center.

Sherry D. Brinkley
Petitions Examiner
Office of Petitions

UNITED STATES PATENT AND TRADEMARK OFFICE

Commissioner for Patents
United States Patent and Trademark Office
P.O. Box 1450
Alexandria, VA 22313-1450
www.uspto.gov

J. Nevin Shaffer, Jr.
Shaffer & Culbertson
913 Gulf Breeze Parkway, Suite 43
Gulf Breeze FL 32561

COPY MAILED

APR 18 2007

OFFICE OF PETITIONS

In re Application of
Stephens and Zrudsky
Application No. 10/685735
Filed: 10/14/2003
Attorney Docket No. 101-881

DECISION REFUSING STATUS
UNDER 37 CFR 1.47(a)

This is in response to the petition under 37 CFR 1.47(a), filed. The petition was recently forwarded to the Office of Petitions for a decision on the merits. The Office sincerely apologizes for any inconvenience.

The petition is **dismissed**.

Applicants are given TWO (2) MONTHS from the mailing date of this decision to reply, correcting the below-noted deficiencies. Any reply should be entitled "Request for Reconsideration of Petition Under 37 CFR 1.47(a)," and should address the deficiencies noted below, except that the reply may include a declaration executed by the non-signing inventor(s). Failure to respond will result in abandonment of the application. Any extensions of time will be governed by 37 CFR 1.136(a). No additional petition fee is necessary for filing a request for reconsideration.

A grantable petition under 37 CFR 1.47(a) requires: (1) proof that the non-signing inventor cannot be reached or refuses to sign the oath or declaration after having been presented with the reissue application papers; (2) an acceptable reissue oath or declaration in compliance with 37 CFR 1.63 and 1.175; (3) the petition fee; and (4) a statement of the last known address of the non-signing inventor. Applicants lack item (1) as set forth above.

As to item (1), it appears that applicants did not present the non-signing inventor with a complete copy of the reissue application papers. In the Declaration of Facts, Stephen J. Cochran, President, declared that subsequent to the assignment of his rights, non-signing inventor, Donald R. Zrudsky, and Assignee had numerous disputes and contentious litigation. Mr. Cochran indicated that the Mr. Zrudsky was not available to sign the reissue declaration.

Unless applicants presented the non-signing inventor with a complete copy of the reissue application, he could not attest that he reviewed and understands the contents of the specification, including the claims, and therefore, could not sign the declaration that he was given. Accordingly, applicants failed to show or provide proof that the non-signing inventor refused to sign the declaration. See MPEP 409.03(d).

To show that the non-signing inventor refused to join in the application, applicants must show that a complete copy of the reissue application was mailed to the non-signing inventor, personally or through his designated representative, and that he did not respond to the request that he sign the Declaration. The circumstances of any refusal to join in the filing of the application must be made by all persons with firsthand knowledge of the event. Where there is an express or oral refusal, that fact, along with the time and place of the refusal, must be stated in an affidavit or declaration **by the party to whom the refusal was made.** Where there is a written refusal, a copy of the document(s) evidencing that refusal must be made part of the affidavit or declaration.

When it is concluded by applicants that the non-signing inventor's conduct constitutes a refusal, all facts upon which that conclusion is based should be stated in an affidavit or declaration. If there is documentary evidence to support facts alleged in the affidavit or declaration, such evidence must be submitted. Whenever a non-signing inventor gives a reason for refusing to sign the reissue oath or declaration, that reason should be stated in the affidavit or declaration.

Further correspondence with respect to this matter should be addressed as follows:

By mail: Mail Stop Petition
Commissioner for Patents
P.O. Box 1450
Alexandria, VA 22313-1450

By FAX: (571) 273-8300
Attn: Office of Petitions

By hand: Customer Service Window
Randolph Building
401 Dulany Street
Alexandria, VA 22314

Telephone inquiries related to this decision may be directed to the undersigned at (571) 272-3211.

Christina Tartera Donnell

Christina Tartera Donnell
Senior Petitions Attorney
Office of Petitions

UNITED STATES PATENT AND TRADEMARK OFFICE

UNITED STATES DEPARTMENT OF COMMERCE
United States Patent and Trademark Office
Address: COMMISSIONER FOR PATENTS
P.O. Box 1450
Alexandria, Virginia 22313-1450
www.uspto.gov

CROMPTON, SEAGER & TUFTE, LLC
1221 NICOLLET AVENUE
SUITE 800
MINNEAPOLIS, MN 55403-2420

Mail Date: 04/21/2010

Applicant	: Thomas W. Davison	: DECISION ON REQUEST FOR
Patent Number	: 7641670	: RECALCULATION of PATENT
Issue Date	: 01/05/2010	: TERM ADJUSTMENT IN VIEW
Appliction No	: 10/685,761	: OF WYETH AND NOTICE OF INTENT TO
Filed	: 10/15/2003	: ISSUE CERTIFICATE OF CORRECTION
		:

The Request for Recalculation is **GRANTED** to the extent indicated.

The patent term adjustment has been determined to be **1299** days. The USPTO will *sua sponte* issue a certificate of correction reflecting the amount of PTA days determined by the recalculation.

Prior to the issuance of the certificate of correction, the USPTO will afford patentee an opportunity to be heard and request reconsideration. Accordingly, patentee has **one month or thirty (30) days**, whichever is longer, to file a request for reconsideration of this patent term adjustment calculation. See 35 U.S.C. 154(b)(3)(B)(ii) and 37 CFR 1.322(a)(4). No extensions of time will be granted under 37 CFR 1.136.

Patentee should use document code PET.OP if electronically filing a request for reconsideration of this patent term adjustment calculation. The patentee must also include the information required by 37 CFR 1.705(b)(2) and the fee required by 37 CFR 1.18(e). If patentee does not file a timely request for reconsideration of this patent term adjustment calculation including the information required by 37 CFR 1.705(b)(2) and the fee required by 37 CFR 1.18(e), the USPTO will issue a certificate of correction reflecting the PTA determination noted above.

Patentee should be aware that in order to preserve the right to review in the United States District Court for the District of Columbia of the USPTO patent term adjustment determination, patentee must ensure that he or she also take the steps required under 35 U.S.C. 154(b)(4)(A) in a timely manner. Nothing in the request for recalculation should be construed as providing an alternative time frame for commencing a civil action under 35 U.S.C. 154(b)(4)(A).

Any questions concerning this decision should be directed to the Office of Patent Legal Administration at 571-272-7702.

SPE RESPONSE FOR CERTIFICATE OF CORRECTION

Paper No.: _____

DATE : 08/14/07

TO SPE OF : ART UNIT 2817

SUBJECT : Request for Certificate of Correction for Appl. No.: **10/685787** Patent No.: **7002408**

Please respond to this request for a certificate of correction within 7 days.

Please review the requested changes/corrections as shown in the **COCIN** document(s) in the IFW application image. No new matter should be introduced, nor should the scope or meaning of the claims be changed.

Please complete the response (see below) and forward the completed response to scanning using document code **COCX**.

A. Green

Angela Green
Certificates of Correction Branch
703.308.9380 ext. 183

Thank You For Your Assistance

The request for issuing the above-identified correction(s) is hereby:
Note your decision on the appropriate box.

- ☑ **Approved** — **All** changes apply.
- ☐ **Approved in Part** — Specify below which changes **do not** apply.
- ☐ **Denied** — State the reasons for denial below.

Comments: _____

_____

_____

_____

_____

SPE — 2817 Art Unit

UNITED STATES PATENT AND TRADEMARK OFFICE

Commissioner for Patents
United States Patent and Trademark Office
P.O. Box 1450
Alexandria, VA 22313-1450
www.uspto.gov

STERNE, KESSLER, GOLDSTEIN & FOX P.L.L.C.
1100 NEW YORK AVENUE, N.W.
WASHINGTON DC 20005

COPY MAILED

MAR 03 2008

In re Application of
Graham P. Allaway et al.
Application No. 10/685,801
Filed: October 16, 2003
Attorney Docket No. 1900.0380001

ON PETITION

This is a decision on the petition filed October 24, 2007, to withdraw the holding of abandonment under 37 CFR 1.181, in accordance with the reasoning of the decision in Delgar Inc. v. Schuyler, 172 USPQ 513. The petition also pleads in the alternative to revive the instant application under 37 CFR 1.137(a).

The petition under 37 CFR 1.181(b) is **DISMISSED.**
The petition under 37 CFR 1.137(a) is **DISMISSED.**

Any request for reconsideration of this decision must be submitted within **TWO (2) MONTHS** from the mail date of this decision. Extensions of time under 37 CFR 1.136(a) are permitted. The reconsideration request should include a cover letter entitled "Renewed Petition under 37 CFR 1.181," or, under 37 CFR 1.137(a)". This is not a final agency decision.

The application was held abandoned on April 12, 2007 for failure to file a timely response to the Final Office Action mailed January 11, 2007, which set a three (3) month shortened period for reply. No extensions of time in accordance with 37 CFR 1.136(a) were obtained. Accordingly, a Notice of Abandonment was mailed October 5, 2007.

The instant petition to revive is filed with an Request for Continued Examination and amendment as the submission under 37 CFR 1.114.

As a participant in the "E-Office Action Pilot Program" and in accordance with the policies and procedures for notification of outgoing correspondences, on January 12, 2007, an email notification was sent to the applicant to advise of the January 11, 2007 Final Office Action. While USPTO records indicate that the Final Office Action was viewed on January 19, 2007, petitioner contends that it was not received and seeks therefore to have the abandonment withdrawn, the office action re-mailed and the period for reply re-started.

Unfortunately, the requirement under 37 CFR 1.181, as it equally applies to both paper copies of office actions and e-office actions, that copies of the actual docket records or file jacket be provided has not been met. In a petition under 37 CFR 1.181 the petitioner must show, as in this instance where non-receipt is claimed that petitioner is without fault in not receiving the communication. In the absence of any irregularity in the e-mail notification, there is a strong presumption that the notification was properly sent to the email address provided. This presumption may be overcome by a showing that the email notification was not in fact received at the address of record.

In this instance however, the record supports a conclusion that notification of the Final Office Action was sent via email and received. The record indicates that the email notification was viewed and no other corroborating evidence to prove non-receipt has been presented. In view thereof, the holding of abandonment cannot be withdrawn.

SHOWING OF UNAVOIDABLE DELAY

This petition lacks item (3) under 37 CFR 1.137(a).

Decisions on reviving abandoned applications on the basis of "unavoidable" delay have adopted the reasonably prudent person standard in determining if the delay was unavoidable:

> The word 'unavoidable' . . . is applicable to ordinary human affairs, and requires no more or greater care or diligence than is generally used and observed by prudent and careful men in relation to their most important business. It permits them in the exercise of this care to rely upon the ordinary and trustworthy agencies of mail and telegraph, worthy and reliable employees, and such other means and instrumentalities as are usually employed in such important business. If unexpectedly, or through the unforeseen fault or imperfection of these agencies and instrumentalities, there occurs a failure, it may properly be said to be unavoidable, all other conditions of promptness in its rectification being present.[1]

The showing of record is inadequate to establish unavoidable delay within the meaning

---

[1] In re Mattullath, 38 App. D.C. 497, 514-15 (1912)(quoting Ex parte Pratt, 1887 Dec. Comm'r Pat. 31, 32-33 (1887)); see also Winkler v. Ladd, 221 F. Supp. 550, 552, 138 USPQ 666, 167-68 (D.D.C. 1963), aff'd, 143 USPQ 172 (D.C. Cir. 1963); Ex parte Henrich, 1913 Dec. Comm'r Pat. 139, 141 (1913). In addition, decisions on revival are made on a "case-by-case basis, taking all the facts and circumstances into account." Smith v. Mossinghoff, 671 F.2d 533, 538, 213 USPQ 977, 982 (D.C. Cir. 1982). Finally, a petition cannot be granted where a petitioner has failed to meet his or her burden of establishing that the delay was "unavoidable." Haines v. Quigg, 673 F. Supp. 314, 316-17, 5 USPQ2d 1130, 1131-32 (N.D. Ind. 1987).

of 37 CFR 1.137(a). Specifically, an application is "unavoidably" abandoned only where petitioner, or counsel for petitioner, takes all action necessary for a proper response to the outstanding Office action, but through the intervention of unforeseen circumstances, such as failure or mail, telegraph, telefacsimile, or the negligence of otherwise reliable employees, the response is not timely received in the Office. [2]

Petitioner argues in the alternative that the failure to file a timely response to the January 11, 2007 Final Office Action was unavoidable due to a docketing error. In the alternative argument however, petitioner claims that a business routine was in place for performing the clerical docketing function and that the docketing employees were sufficiently and properly trained for performing the task. In view of the email notification, the procedure included printing the papers, logged into the Incoming Correspondence Log as well as the electronic docketing system and the secondary backup paper docketing system. Nonetheless, petitioners argue that, for some unknown reason, the office actions for the instant application and several other applications were not docketed into the firm's docketing system.

While docket/clerical error can be construed as unavoidable, petitioner has failed to provide facts to warrant such a finding. A delay resulting from an error on the part of an employee in the performance of a clerical function may provide the basis provided it is shown 1) the error was the cause of the delay; 2) there was in place a business routine for performing the clerical function which could reasonably be relied upon to avoid errors in its performance and 3) the employee was sufficiently trained and experienced with regard to the function and routine for its performance that reliance upon such employee represented the exercise of due care.

However, clerical error in the form of careless mistakes or the result of a lack of knowledge of USPTO practices and procedures would not establish unavoidable delay.[3] Petitioner has provided four additional instances in which, e-mail notifications did not result in obtaining an Office communication. The multiple missteps, suggests a lack of training and/or adequate supervision.

An adequate showing of unavoidable delay due to docket/clerical error may include but not limited to:

1) statements by all parties with direct knowledge of the circumstances

---

[2] Ex parte Pratt, 1887 Dec. Comm'r Pat. 31 (Comm'r Pat. 1887).

[3] See, e.g., *Haines*, 673 F. Supp. at 317, 5 USPQ2d at 1132; *Vincent v. Mossinghoff*, 230 USPQ 621, 624 (D.D.C. 1985); *Smith v. Diamond*, 209 USPQ 1091 (D.D.C. 1981); *Potter v. Dann*, 201 USPQ 574 (D.D.C. 1978); *Ex parte Murray*, 1891 Dec. Comm'r Pat. 130, 131 (1891).

surrounding the delay;
2) a through explanation of the docketing system in use;
3) identification of the types of records kept;
4) identification of the persons responsible for the maintenance of the system, copies of mail ledger, docket sheets, file wrappers;
6)an indication why the system failed; and
5)information regarding the training provided to the clerk(s) responsible for the docketing error, the degree of supervision of their work.

In view thereof, we would suggest that instead of a clerical or docketing error that perhaps there is a systemic problem which would therefore preclude a finding of unavoidable delay.

Further, based on the arguments and evidence presented, it isn't clear that docketing error was in fact the cause of the delay as petitioners have noted that for some unknown reason the eOffice Actions were not docketed in several applications. As noted above, from the evidence presented it is more likely that the delay was due to a system error.

As petitioner has presented no showing of unavoidable delay, the petition will be dismissed.

ALTERNATIVE VENUE

Petitioner may wish to consider filing a renewed petition under 37 CFR 37 CFR 1.137(b),[4] which now provides that where the delay in reply was unintentional, a petition may be filed to revive an abandoned application or a lapsed patent pursuant to 37 CFR 1.137(b).

---

[4]Effective December 1, 1997, the provisions of 37 CFR 1.137(b) now provide that where the delay in reply was unintentional, a petition may be filed to revive an abandoned application or a lapsed patent pursuant to 37 CFR 1.137(b). A grantable petition filed under the provisions of 37 CFR 1.137(b) must be accompanied by:

(1) the required reply, unless previously filed. In a nonprovisional application abandoned for failure to prosecute, the required reply may be met by the filing of a continuing application. In a nonprovisional application filed on or after June 8, 1995, and abandoned for failure to prosecute, the required reply may also be met by the filing of a request for continued examination in compliance with § 1.114. In an application or patent, abandoned or lapsed for failure to pay the issue fee or any portion thereof, the required reply must be the payment of the issue fee or any outstanding balance thereof. In an application abandoned for failure to pay the publication fee, the required reply must include payment of the publication fee.

(2) the petition fee as set forth in 37 CFR 1.17(m);

(3) a statement that the entire delay in filing the required reply from the due date for the reply until the filing of a grantable petition pursuant to 37 CFR 1.137(b) was unintentional. The Commissioner may required additional information where there is a question whether the delay was unintentional; and

(4) any terminal disclaimer (and fee as set forth in 37 CFR 1.20(d)) required pursuant to 37 CFR 1.137(c)).

The filing of a petition under the unintentional standard cannot be intentionally delayed and therefore should be filed promptly. A person seeking revival due to unintentional delay cannot make a statement that the delay was unintentional unless the entire delay, including the delay from the date it was discovered that the application was abandoned until the filing of the petition to revive under 37 CFR 1.137(b), was unintentional. A statement that the delay was unintentional is not appropriate if petitioner intentionally delayed the filing of a petition for revival under 37 CFR 1.137(b).

Further correspondence with respect to this matter should be addressed as follows:

By mail: Mail Stop Petition
Commissioner for Patents
P.O. Box 1450
Alexandria, VA 22313-1450

By FAX: (571) 273-8300

Telephone inquiries concerning this matter may be directed to the undersigned Petitions Attorney at (571) 272-3212.

Patricia Faison-Ball
Senior Petitions Attorney
Office of Petitions

UNITED STATES PATENT AND TRADEMARK OFFICE

UNITED STATES DEPARTMENT OF COMMERCE
United States Patent and Trademark Office
Address: COMMISSIONER FOR PATENTS
P.O. Box 1450
Alexandria, Virginia 22313-1450
www.uspto.gov

LIFE TECHNOLOGIES CORPORATION
C/O INTELLEVATE
P.O. BOX 52050
MINNEAPOLIS, MN 55402

Mail Date: 04/21/2010

Applicant	: Richard Fike	: DECISION ON REQUEST FOR
Patent Number	: 7572632	: RECALCULATION of PATENT
Issue Date	: 08/11/2009	: TERM ADJUSTMENT IN VIEW
Appliction No	: 10/685,802	: OF WYETH AND NOTICE OF INTENT TO
Filed	: 10/16/2003	: ISSUE CERTIFICATE OF CORRECTION
		:

The Request for Recalculation is **GRANTED** to the extent indicated.

The patent term adjustment has been determined to be **569** days. The USPTO will *sua sponte* issue a certificate of correction reflecting the amount of PTA days determined by the recalculation.

Prior to the issuance of the certificate of correction, the USPTO will afford patentee an opportunity to be heard and request reconsideration. Accordingly, patentee has **one month or thirty (30) days**, whichever is longer, to file a request for reconsideration of this patent term adjustment calculation. See 35 U.S.C. 154(b)(3)(B)(ii) and 37 CFR 1.322(a)(4). No extensions of time will be granted under 37 CFR 1.136.

Patentee should use document code PET.OP if electronically filing a request for reconsideration of this patent term adjustment calculation. The patentee must also include the information required by 37 CFR 1.705(b)(2) and the fee required by 37 CFR 1.18(e). If patentee does not file a timely request for reconsideration of this patent term adjustment calculation including the information required by 37 CFR 1.705(b)(2) and the fee required by 37 CFR 1.18(e), the USPTO will issue a certificate of correction reflecting the PTA determination noted above.

Patentee should be aware that in order to preserve the right to review in the United States District Court for the District of Columbia of the USPTO patent term adjustment determination, patentee must ensure that he or she also take the steps required under 35 U.S.C. 154(b)(4)(A) in a timely manner. Nothing in the request for recalculation should be construed as providing an alternative time frame for commencing a civil action under 35 U.S.C. 154(b)(4)(A).

Any questions concerning this decision should be directed to the Office of Patent Legal Administration at 571-272-7702.

UNITED STATES PATENT AND TRADEMARK OFFICE

Commissioner for Patents
United States Patent and Trademark Office
P.O. Box 1450
Alexandria, VA 22313-1450
www.uspto.gov

KED & ASSOCIATES, LLP
P.O. BOX 221200
CHANTILLY, VA 20153-1200

RECEIVED

JAN 05 2009

OFFICE OF PETITIONS

In re Application of :
KIM, Do Nyun :
Application No. 10/685,808 : DECISION GRANTING PETITION
Filed: October 16, 2003 : UNDER 37 CFR 1.313(c)(2)
Attorney Docket No. **HI-0181** :

This is a decision on the petition under 37 CFR 1.313(c)(2), filed January 2, 2009, to withdraw the above-identified application from issue after payment of the issue fee.

The petition is **GRANTED**.

The above-identified application is withdrawn from issue for consideration of a submission under 37 CFR 1.114 (request for continued examination). *See* 37 CFR 1.313(c)(2).

Petitioner is advised that the issue fee paid on August 13, 2008 cannot be refunded. If, however, this application is again allowed, petitioner may request that it be applied towards the issue fee required by the new Notice of Allowance.[1]

Telephone inquiries should be directed to the undersigned at (571) 272-7253.

This application is being referred to Technology Center AU 2176 for processing of the request for continued examination under 37 CFR 1.114 and for consideration of the concurrently filed amendment.

/Monica A. Graves/
Petitions Examiner
Office of Petitions

[1] *The request to apply the issue fee to the new Notice may be satisfied by completing and returning the new Part B – Fee(s) Transmittal Form (along with any balance due at the time of submission). Petitioner is advised that the Issue Fee Transmittal Form* ***must*** *be completed and timely submitted to avoid abandonment of the application.*

UNITED STATES PATENT AND TRADEMARK OFFICE

Commissioner for Patents
United States Patent and Trademark Office
P.O. Box 1450
Alexandria, VA 22313-1450
www.uspto.gov

LOUIS WOO
LAW OFFICE OF LOUIS WOO
717 NORTH FAYETTE STREET
ALEXANDRIA VA 22314

6/26/09

In re Application of:
WOO, LOUIS
Serial No.: 10/685,809
Filed: Oct. 16, 2003
Docket: 0119/0017
Title: DILATORS

DECISION ON PETITION

This is a decision on the petition filed on May 22, 2009 seeking to forward the case to the Board of Patent Appeals and Interferences for adjudication. This petition is being considered pursuant to 37 CFR § 1.181(a) (3). No fee is required for this petition.

The petition is **Granted.**

In the petition, the petitioner requests that the Director to direct the examiner to consider the appeal brief filed on May 22, 2009 and forward the application to the Board of Patent Appeals and Interferences for final resolution.

The record shows that:

1) In response to the applicant's amendment of Oct. 5, 2007, on Jan. 2, 2008 the examiner mailed a final Office action.
2) On March 31, 2008, the petitioner filed a notice of appeal followed with an Appeal Brief on May 29, 2008 appealing the claims under final rejection.
3) In response to the Appeal Brief of May 29, 2008, on August 19, 2008, the examiner re-opened prosecution and issued a non-final Office action with new grounds of rejection.
4) In response, the applicant filed a second appeal brief on November 10, 2008 appealing all rejected claims.
5) On November 11, 2008, the applicant filed a second notice of appeal and an appeal brief on Dec. 14, 2007.
7) On February 24, 2009, the examiner issued another non-final Office action maintaining the rejection, but reopening the prosecution of the case.
8) On May 22, 2009, the applicant filed third notice of appeal and third appeal brief appealing the rejected claims.
9) On May 2, 2009 the present petition was filed requesting the examiner to forward the case to the Board of Patent Appeals and Interferences for its adjudication.

Discussion and Analysis

A review of the application reveals that there is a prolonged prosecution in this case. The application history also shows the examiner reopened prosecution two times. Office policy requires examiners to complete a thorough prior art search, and avoid piecemeal examination as much as possible. Office policy discourages piece meal prosecution as set forth in M.P.E.P §707.07(g)[1]. Regrettably due to late discovery and different interpretation of the prior art references, prosecution of the applicant's invention has been unavoidably prolonged. It should be noted that the Primary Examiner has a duty to consider the merits of the claims under M.P.E.P. § 1004. In order to avoid re-opening prosecution, the examiner is again reminded to perform a complete and thorough search of prior art considering not only the claims presented, but also any subject matter the examiner reasonably anticipates might be incorporated into a subsequent amendment in accordance with M.P.E.P. 904.03[2].

In response to the petition, the examiner is hereby instructed to timely set up an appeal conference in accordance with M.P.E.P. §1207.01. Additionally, the examiner is also directed to conclude the examination of the application within three months or sooner from the filing date of the latest appeal brief.

Conclusion

Under the circumstances, the relief requested by the petitioner is granted. The application is being forwarded to the Supervisory Patent Examiner in Art Unit 3767 for consideration of the appeal brief filed on May 22, 2009. Any inquiry regarding this decision should be directed to Henry Yuen, Special Programs Examiner, at (571) 272-4856.

Petition Granted.

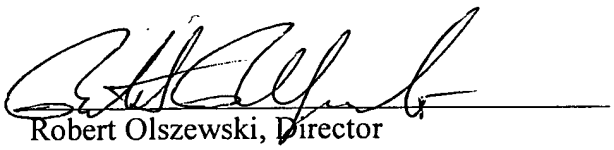

Robert Olszewski, Director
Technology Center 3700

[1] M.P.E.P. § 707.07(g) states: Piecemeal examination should be avoided as much as possible. The examiner ordinarily should reject each claim on all valid grounds available, avoiding, however, undue multiplication of references

[2] M.P.E.P. § 904.03 states in relevant part: "'It is normally not enough that references be selected to meet only the terms of the claims alone, especially if only broad claims are presented; but the search should, insofar as possible, also cover all subject matter which the examiner reasonably anticipates might be incorporated into applicant's amendment."

UNITED STATES PATENT AND TRADEMARK OFFICE

UNITED STATES DEPARTMENT OF COMMERCE
United States Patent and Trademark Office
Address: COMMISSIONER FOR PATENTS
P.O. Box 1450
Alexandria, Virginia 22313-1450
www.uspto.gov

APPLICATION NO.	FILING DATE	FIRST NAMED INVENTOR	ATTORNEY DOCKET NO.	CONFIRMATION NO.
10/685,821	10/15/2003	Mark Steven Boggs	2002P20758US01	5269

7590 05/02/2008

Siemens Corporation
Intellectual Property Department
170 Wood Avenue South
Iselin, NJ 08830

EXAMINER	
CHOE, YONG J	
ART UNIT	PAPER NUMBER
2185	

MAIL DATE	DELIVERY MODE
05/02/2008	PAPER

Please find below and/or attached an Office communication concerning this application or proceeding.

The time period for reply, if any, is set in the attached communication.

UNITED STATES PATENT AND TRADEMARK OFFICE

Commissioner for Patents
United States Patent and Trademark Office
P.O. Box 1450
Alexandria, VA 22313-1450
www.uspto.gov

MAILED

MAY 02 2008

TECHNOLOGY CENTER 2100

Siemens Corporation
Intellectual Property Department
170 Wood Avenue South
Iselin NJ 08830

In re Application of: Hausman, et al.
Application No. 10/685,821
Filed: October 15, 2003
For: METHOD FOR UTILIZING A MEMORY DEVICE FOR A PLC

DECISION ON PETITION UNDER 37 C.F.R. § 1.181

This is a decision on the petition, filed 14 January 2008, and a second petition filed February 25, 2008, under 37 CFR § 1.181 to reconsider and reverse the examiner's Final rejection mailed 15 November 2007, as being premature.

The petition is **DISMISSED**.

On 14 January 2008, applicant's counsel filed a petition to the Director under 37 CFR § 1.181 to seek relief from actions of the examiner Choe in relation to the Final Office action mailed 15 November 2007. In the petition, applicant's counsel alleges that the that examiner failed to respond to all Applicants' arguments regarding claim 6, rendering the Final Office action premature. Applicant states in the petition:

> ....in traversing a rejection of claim 6, Applicant presented the following argument:
> By **rejecting claims l, 6, 16, 21, 26, 35 and 36 as a group**, the present Office Action appears to improperly group claims together in a common rejection without any showing that the rejection is equally applicable to all claims in the group. That is never appropriate. See MPEP 707.07(d). For example, unlike the other claims in the rejected group, claim 6 states "prompting a user to select an identifying stamp for records in a data log file, the data log file having a structure stored separately from the data log file in the memory cartridge". The omnibus rejection of claim groups by the references relied upon in the Office Action makes no mention of "prompting a user to select an identifying stamp for records in a data log file, the data log file having a structure stored separately from the data log file in the memory cartridge", and fails to point out where, in any of the references, that limitation is disclosed. In view of the failure of the Office Action to satisfy the requirements of MPEP 707.07(d), the next Office Action should not be final.

MPEP § 1201 states, in part:

> The United States Patent and Trademark Office (Office) in administering the Patent Laws makes many decisions of a *>substantive< nature which the applicant may feel deny him or her the patent protection to which he or she is entitled. The differences of opinion on such matters can be justly resolved only by prescribing and following judicial procedures. **Where the differences of**

> **opinion concern the denial of patent claims because of prior art or **>other patentability issues<, the questions thereby raised are said to relate to the merits,** and appeal procedure within the Office and to the courts has long been provided by statute >(35 U.S.C. 134)<.
>
> The line of demarcation between appealable matters for the Board of Patent Appeals and Interferences (Board) and petitionable matters for the **>Director of the U.S. Patent and Trademark Office (Director)< should be carefully observed. The Board will not ordinarily hear a question **>that< should be decided by the *>Director on petition<, and the *>Director< will not ordinarily entertain a petition where the question presented is **>a matter appealable to the Board<. However, since 37 CFR 1.181(f) states that any petition not filed within 2 months from the action complained of may be dismissed as untimely and since 37 CFR 1.144 states that petitions from restriction requirements must be filed no later than appeal, petitionable matters will rarely be present in a case by the time it is before the Board for a decision. In re Watkinson, 900 F.2d 230, 14 USPQ2d 1407 (Fed. Cir. 1990).

MPEP 707.07(D) states in part:

> IMPROPERLY EXPRESSED REJECTIONS
> An omnibus rejection of the claim "on the references and for the reasons of record" is stereotyped and usually not informative and should therefore be avoided. This is especially true where certain claims have been rejected on one ground and other claims on another ground.
> A plurality of claims should never be grouped together in a common rejection, unless that rejection is equally applicable to all claims in the group.

MPEP 707.07(f) [R-3] states in part:

> Where the applicant traverses any rejection, the examiner should, if he or she repeats the rejection, take note of the applicant's argument and answer the substance of it.
> .....
> The importance of answering applicant's arguments is illustrated by In re Herrmann, 261 F.2d 598, 120 USPQ 182 (CCPA 1958) where the applicant urged that the subject matter claimed produced new and useful results. The court noted that since applicant's statement of advantages was not questioned by the examiner or the Board of Appeals, it was constrained to accept the statement at face value and therefore found certain claims to be allowable. See also In re Soni, 54 F.3d 746, 751, 34 USPQ2d 1684, 1688 (Fed. Cir. 1995) (Office failed to rebut applicant's argument).

37 C.F.R. § 1.181(f) states, in part:

> The mere filing of a petition will not stay any period for reply that may be running against the application, nor act as a stay of other proceedings. Any petition ...

A review of the prosecution history in the instant application, reveals that only claims 1, 6, 35, and 36 were rejected together in a group in the final rejection mailed November 15, 2007, and not all of claims 1, 6, 16, 21, 26, 35 and 36, as stated in the petition. Further the petition indicates that there is a disagreement between the examiner and applicant's counsel in the interpretation of the claim language and prior art, and whether all of applicants' arguments were addressed by the

examiner. All claims have been rejected under 35 U.S.C. §§ 103(a). Thus, it is apparent that such a disagreement regarding claim interpretation and rejection is appealable, not a petitionable matter.

Pursuant to MPEP § 1201, the petition is **DISMISSED.**

A petition under 37 C.F.R. 1.181 requires no fee. The application file is being forwarded to the Tech Support staff to refund the fee of $130.00, that was charged to petitioner on January 15, 2008, and another fee of $130.00 that was charged to petitioner on February 26, 2008.

From there, the application will be forwarded to the examiner to act on the After Final Amendment filed by Applicant on January 14, 2008.

Any inquiry concerning this decision should be directed to Mano Padmanabhan whose telephone number is (571) 272-4210.

Jack Harvey, Director
Technology Center 2100
Computer Architecture, Software, and Information Security

UNITED STATES PATENT AND TRADEMARK OFFICE

Commissioner for Patents
United States Patent and Trademark Office
P.O. Box 1450
Alexandria, VA 22313-1450
www.uspto.gov

HAYNES AND BOONE, LLP
901 Main Street
Suite 3100
Dallas TX 75202

COPY MAILED

NOV 0 1 2007

OFFICE OF PETITIONS

In re Application of
Wen Chin LIN et al.
Patent No. 7,166,881
Issue Date : July 23, 2007
Application No. 10/685,824
Filed: October 13, 2003
Attorney Docket No. 24061.24 / TSMC2002-0942

DECISION GRANTING PETITION

This is a decision on the petition, filed December 17, 2004 and resubmitted August 14, 2007, requesting that the above-identified application be accorded a filing date of October 13, 2003, rather than the presently accorded date of August 23, 2004. The petition is properly treated as a petition under 37 CFR 1.10(c).

Petitioner alleges that the application was deposited in Express Mail Service on October 13, 2003. In support, the petition is accompanied by a copy of Express Mail receipt No. EV333435860US (the same Express Mail number found on the original application papers located in the official file) showing a "date in" of October 13, 2003.

Additionally, petitioner alleges that petitioner's response, filed August 23, 2004, to the Notice to File Missing Parts (Notice) accepted the application as originally filed and filed a preliminary amendment to renumber pages consecutively and cancel incomplete sentences caused by the omitted item, as provided for under Option III of the Notice.

The Office considers the date the paper or fee is shown to have been deposited as "Express Mail" to be the "date-in" on the Express Mail label; MPEP 513. The evidence is convincing that the application was deposited as "Express Mail" with the U. S. Postal Service on October 13, 2003 and that petitioner accepted Option III of the Notice.

In view of the above, the petition is **GRANTED**.

This application file is being referred to the Office of Initial Patent Examination (OIPE) for correction of the filing date to **October 13, 2003** and for issuance of a corrected filing receipt.

This application is being referred to the Certificates of Correction Branch for processing the request for a certificate of correction in accordance with this decision on the petition under 37 CFR 1.10(c).

Since the instant petition is properly treated under 37 CFR 1.10(c) the petition fee of $130 is unnecessary and will be credited to petitioner's deposit account no. 08-1394.

Telephone inquiries relating to this decision should be directed David Bucci at (571) 272-7099.

Telephone inquiries related to OIPE processing should be directed to their hotline at (571) 272-4100.

Brian Hearn
Petitions Examiner
Office of Petitions

Electronic Patent Application Fee Transmittal

Application Number:	10685824
Filing Date:	23-Aug-2004
Title of Invention:	MULTI-SENSING LEVEL MRAM STRUCTURES
First Named Inventor/Applicant Name:	Wen Chin Lin
Filer:	David M. Odell/Denise Wilson
Attorney Docket Number:	24061.24 / TSMC2002-0942
Filed as Large Entity	

Adjustment date: 11/01/2007 CKHLOK
11/15/2007 INTEFSW 00001417 081394 10685824
01 FC:1464 130.00 CR

Utility Filing Fees

Description	Fee Code	Quantity	Amount	Sub-Total in USD($)
Basic Filing:				
Pages:				
Claims:				
Miscellaneous-Filing:				
Petition:				
Petition fee- 37 CFR 1.17(h) (Group III)	1464	1	130	130
Patent-Appeals-and-Interference:				
Post-Allowance-and-Post-Issuance:				
Extension-of-Time:				

UNITED STATES PATENT & TRADEMARK OFFICE
Washington, D.C. 20231

REQUEST FOR PATENT FEE REFUND

1 Date of Request: 10/31/07 | 2 Serial/Patent # 10/685,824

	3 Please refund the following fee(s):	4 PAPER NUMBER	5 DATE FILED	6 AMOUNT
	Filing			$
	Amendment			$
	Extension of Time			$
	Notice of Appeal/Appeal			$
X	Petition		8/14/07	$ 130
	Issue			$
	Cert of Correction/Terminal Disc.			$
	Maintenance			$
	Assignment			$
	Other			$

7 TOTAL AMOUNT OF REFUND: $ 130

8 TO BE REFUNDED BY:

- [ ] Treasury Check
- [X] Credit Deposit A/C #:

9 [0][8]--[1][3][9][4]

10 REASON:

- [ ] Overpayment
- [ ] Duplicate Payment
- [X] No Fee Due (Explanation):

No fee due for 1.10(c) petition

11 REFUND REQUESTED BY:

TYPED/PRINTED NAME: David Bucci TITLE: Petition Examiner

SIGNATURE: [signature] PHONE: 272-7099

OFFICE: Petitions

****

THIS SPACE RESERVED FOR FINANCE USE ONLY:

APPROVED: [signature] DATE: 11/1/07

Instructions for completion of this form appear on the back. After completion, attach white and yellow copies to the official file and mail or hand-carry to:

Office of Finance
Refund Branch
Crystal Park One, Room 802B

FORM PTO 1577
(01/90)

UNITED STATES PATENT AND TRADEMARK OFFICE

UNDER SECRETARY OF COMMERCE FOR INTELLECTUAL PROPERTY AND
DIRECTOR OF THE UNITED STATES PATENT AND TRADEMARK OFFICE
WASHINGTON, DC 20231
www.uspto.gov

WEGMAN, HESSLER & VANDERBURG
c?o Bruce Peacock
6055 Rockside Woods Blvd.
Suite 200
Cleveland, OH 44131

MAILED
FROM DIRECTORS OFFICE

APR 01 2005

TECHNOLOGY CENTER 3600

In re application of
Terry J. Stineman
Application No. 10/685,827 : DECISION ON REQUEST
Filed: October 14, 2003 : FOR WITHDRAWAL OF
For: VIBRATION DAMPING ASSEMBLY : ATTORNEY

This is a decision on the renewed request filed on February 22, 2005, under 37 CFR 1.36 and MPEP 402.06, requesting permission to withdraw as the attorney of record in the above-identified application. The delay in treating this request is sincerely regretted.

The request is **NOT APPROVED as MOOT**.

Under 37 CFR 1.36 an attorney may withdraw only upon application to and approval by the Commissioner. It should be noted that a withdrawal is effective when approved, not when filed. Besides giving due notice to his or her client and delivering to the client all papers and property to which the client is entitled as specified under 37 CFR 10.40, approval of such a request requires that the following conditions be met:

A) Each attorney of record must sign the notice of withdrawal, or the notice must contain a clear indication of one attorney signing on behalf of another, because the Office does not recognize law firms;

B) A proper reason for the withdrawal as enumerated in 37 CFR 10.40(b) or subsection (1)-(6) of 37 CFR 10.40(c) must be provided; and

C) If withdrawal is requested in accordance with 37 CFR 10.40(c) above, there must be at least 30 days between approval of the withdrawal and the later of the expiration date of a time period for reply or the expiration date of the period which can be obtained by a petition and fee for extension of time under 37 CFR 1.136(a).

The request to withdraw as attorney in the above-identified application is not approved as moot because the power of attorney has already been changed as per the Notice regarding Change of Power of Attorney mailed March 09, 2005.

Kenneth J. Dorner
Special Programs Examiner
Patent Technology Center 3600
(703) 308-0866
Facsimile No.: (703) 605-0586

KJD/slb: 03/11/05

cc: Timothy D. Bennett
Brouse McDowell, LPA
500 First National Tower
106 S. Main Street
Akron, OH 44308-1471

UNITED STATES PATENT AND TRADEMARK OFFICE

UNDER SECRETARY OF COMMERCE FOR INTELLECTUAL PROPERTY AND
DIRECTOR OF THE UNITED STATES PATENT AND TRADEMARK OFFICE
WASHINGTON, DC 20231
www.uspto.gov

MAILED
FROM DIRECTORS OFFICE

JUL 12 2005

TECHNOLOGY CENTER 3600

Wegman, Hessler, & Vanderburg
C?o Bruce Peacock
6055 Rockside Woods Blvd.
Suite 200
Cleveland, OH 44131

In re application of
Terry J. Stineman
Application No. 10/685,827 : DECISION ON REQUEST
Filed: October 14, 2003 : FOR WITHDRAWAL OF
For: VIBRATION DAMPING ASSEMBLY : ATTORNEY

This is a decision on the renewed request filed on February 22, 2005, under 37 CFR 1.36 and MPEP 402.06, requesting permission to withdraw as the attorney of record in the above-identified application. The delay in treating this request is sincerely regretted.

The request is **NOT APPROVED as MOOT**.

Under 37 CFR 1.36 an attorney may withdraw only upon application to and approval by the Commissioner. It should be noted that a withdrawal is effective when approved, not when filed. Besides giving due notice to his or her client and delivering to the client all papers and property to which the client is entitled as specified under 37 CFR 10.40, approval of such a request requires that the following conditions be met:

A) Each attorney of record must sign the notice of withdrawal, or the notice must contain a clear indication of one attorney signing on behalf of another, because the Office does not recognize law firms;

B) A proper reason for the withdrawal as enumerated in 37 CFR 10.40(b) or subsection (1)-(6) of 37 CFR 10.40(c) must be provided; and

C) If withdrawal is requested in accordance with 37 CFR 10.40(c) above, there must be at least 30 days between approval of the withdrawal and the later of the expiration date of a time period for reply or the expiration date of the period which can be obtained by a petition and fee for extension of time under 37 CFR 1.136(a).

The request to withdraw as attorney in the above-identified application is not approved as moot because the power of attorney has already been changed as per the Notice regarding Change of Power of Attorney mailed March 09, 2005.

Kenneth J. Dorner
Special Programs Examiner
Patent Technology Center 3600
(703) 308-3868
Facsimile No.: (703) 605-0586

KJD/slb: 06/15/05

cc: Timothy D. Bennett
Brouse McDowell, LPA
500 First National Tower
106 S. Main Street
Akron, OH 44308-1471

UNITED STATES PATENT AND TRADEMARK OFFICE

Commissioner for Patents
United States Patent and Trademark Office
P.O. Box 1450
Alexandria, VA 22313-1450
www.uspto.gov

MAILED
FROM DIRECTORS OFFICE
DEC 0 3 2004
TECHNOLOGY CENTER 3600

JOSEPH G. SWAN, ESQ.
MITCHELL, SILBERBERG & KNUPP LLP
11377 WEST OLYMPIC BOULEVARD
LOS ANGELES, CA 90064

In re application of
Harry Edward Dempster
Application No. 10/685,831
Filed: October 14, 2003
For: BREAKWATER

DECISION ON PETITION TO MAKE SPECIAL (APPLICANT'S AGE)

This is a decision on the petition submitted on December 18, 2003 under 37 CFR 1.102 (c) to make the above-identified application special under the accelerated examination procedure set forth in MPEP 708.02, Section IV: Applicant's Age.

The petition is **GRANTED**.

An application may be accorded special status upon the filing of a petition providing evidence showing that the applicant is at least 65 years old. Such a showing may be provided by evidence such as a birth certificate or a statement from the applicant.

The evidence submitted with the petition is a signed declaration indicating Mr. Dempster is at least 65 years of age.

The examiner is directed (1) to make an interference search for possible interfering applications, (2) to promptly examine this application out of turn, and (3) if any interfering application is discovered, to examine such application simultaneously and state in the first official letter of such application that it is being taken out of turn because of a possible interference.

Petitioner is advised that this application will continue to be special, throughout its entire prosecution and pendency, including interference or appeal, if any, only if petitioner makes a prompt ***bona fide*** effort, in response to each Office action, to place the application in condition for allowance, even if it is necessary to conduct an interview with the examiner to accomplish this purpose.

SUMMARY: Petition to Make Special **GRANTED**.

Kenneth J. Dorner
Special Programs Examiner
Technology Center 3600
(703) 308-0866

KJD/slb: 11/15/04

UNITED STATES PATENT AND TRADEMARK OFFICE

Commissioner for Patents
United States Patent and Trademark Office
P.O. Box 1450
Alexandria, VA 22313-1450
www.uspto.gov

PHILIP S. JOHNSON
JOHNSON & JOHNSON
ONE JOHNSON & JOHNSON PLAZA
NEW BRUNSWICK NJ 08933-7003

MAILED

FEB 26 2010

OFFICE OF PETITIONS

In re Application of :
Carsten Schubert et al. :
Application No. 10/685,838 : DECISION ON PETITION
Filed: October 15, 2003 :
Attorney Docket No. **PRD-2137-USANP** :

This is a decision on the petition under the unintentional provisions of 37 CFR 1.137(b), filed November 4, 2009, to revive the above-identified application.

The petition is **GRANTED**.

The two-month period for filing an appeal brief under 37 CFR 41.37 (accompanied by the fee required by 37 CFR 41.20(b)(2)), runs from the date of this decision.

This application became abandoned for failure to timely file a reply within the meaning of 37 CFR 1.113 to the final Office action of February 1, 2007. The proposed reply required for consideration of a petition to revive must be a Notice of Appeal (and appeal fee required by 37 CFR 41.20(b)(2)), an amendment that *prima facie* places the application in condition for allowance, a Request for Continued Examination (RCE) and submission (37 CFR 1.114), or the filing of a continuing application under 37 CFR 1.53(b). See MPEP 711.03(c)(III)(A)(2). No extensions of time pursuant to the provisions of 37 CFR 1.136(a) were obtained. Accordingly, the date of abandonment of this application is May 2, 2007.

The petition satisfies the requirements of 37 CFR 1.137(b) in that petitioner has supplied (1) the reply in the form of a Notice of Appeal; (2) the petition fee of $1,620; and (3) a proper statement of unintentional delay.

An extension of time under 37 CFR 1.136 must be filed prior to the expiration of the maximum extendable period for reply. *See* In re Application of S., 8 USPQ2d 1630, 1631 (Comm'r Pats. 1988). Since the $130 extension of time fee submitted with the petition on November 4, 2009 was subsequent to the maximum extendable period for reply, this fee is unnecessary and will be credited to petitioner's deposit account.

Telephone inquiries concerning this decision should be directed to JoAnne Burke at (571) 272-4584.

This application is being referred to Technology Center AU 1656 to await the filing of an appeal brief or for such other appropriate reply as may be submitted to continue prosecution of the application.

JoAnne Burke
Petitions Examiner
Office of Petitions

UNITED STATES PATENT AND TRADEMARK OFFICE

COMMISSIONER FOR PATENTS
UNITED STATES PATENT AND TRADEMARK OFFICE
P.O. BOX 1450
ALEXANDRIA, VA 22313-1450
www.uspto.gov

MAILED

APR 1 7 2004

Office of the Director
Group 3600

JOSEPH G. SWAN, ESQ
MITCHELL, SILBERBERG & KNUPP LLP
11377 West Olympic Boulevard
Los Angeles CA 90064

In re application of : **DECISION ON PETITION**
Harry Edward Dempster : **TO MAKE SPECIAL**
Application No. 10/685,843 : **(APPLICANT'S AGE)**
Filed: October 14, 2003 :
For: TECHNIQUE AND PLATFORM FOR FABRICATING A VARIABLE-BUOYANCY STRUCTURE

This is a decision on the petition submitted on December 18, 2003 under 37 CFR 1.102 (c) to make the above-identified application special under the accelerated examination procedure set forth in MPEP 708.02, Section IV: Applicant's Age.

The petition is **GRANTED**.

An application may be accorded special status upon the filing of a petition providing evidence showing that the applicant is at least 65 years old. Such a showing may be provided by evidence such as a birth certificate or a statement from the applicant.

The evidence submitted with the petition is a declaration signed by Mr. Dempster indicating that he is at least 65 years of age.

The examiner is directed (1) to make an interference search for possible interfering applications, (2) to promptly examine this application out of turn, and (3) if any interfering application is discovered, to examine such application simultaneously and state in the first official letter of such application that it is being taken out of turn because of a possible interference.

Petitioner is advised that this application will continue to be special, throughout its entire prosecution and pendency, including interference or appeal, if any, only if petitioner makes a prompt ***bona fide*** effort, in response to each Office action, to place the application in condition for allowance, even if it is necessary to conduct an interview with the examiner to accomplish this purpose.

SUMMARY: Petition to Make Special **GRANTED**.

Randolph A. Reese
Special Programs Examiner
Technology Center 3600
(703) 308-2121

RAR/mjz: 3/30/04

UNITED STATES PATENT AND TRADEMARK OFFICE

Commissioner for Patents
United States Patent and Trademark Office
P.O. Box 1450
Alexandria, VA 22313-1450
www.uspto.gov

MITCHELL SILBERBERG & KNUPP LLP
11377 WEST OLYMPIC BOULEVARD
LOS ANGELES CA 90064

COPY MAILED

AUG 21 2006

OFFICE OF PETITIONS

In re Application of :
Harry Edward Dempster :
Application No. 10/685,843 : ON PETITION
Filed: October 14, 2003 :
Attorney Docket No. 30485-4 :

This is a decision on the petition to revive under 37 CFR 1.137(b), pursuant to 37 CFR 1.137(f), filed January 9, 2006.

The petition is **GRANTED**.

Petitioner states that the instant application is the subject of an international application filed on March 17, 2004. However, the US Patent and Trademark Office was unintentionally not notified of this filing within 45 days subsequent to the filing of the PCT application.

In view of the above, this application became abandoned pursuant to 35 USC 122(b)(2)(B)(iii) and 37 CFR 1.213(c) for failure to timely notify the Office of the filing of an application in a foreign country, or under a multilateral international agreement, that requires publication of applications 18 months after filing.

A petition under 37 CFR 1.137(f) must be accompanied by:

(1) the reply, which is met by the notification of such filing in a foreign country or under a multinational treaty;

(2) the petition fee as set forth in 37 CFR 1.17(m); and

(3) a statement that the entire delay in filing the required reply from the due date of the reply until the filing of a grantable petition was unintentional.

The instant petition has been found to be in compliance with 37 CFR 1.137(f). Accordingly, the failure to timely notify the Office of a foreign or international filing within 45 days after the date of filing of such foreign or international application as provided by 35 USC 122(b)(2)(B)(iii) and 37 CFR 1.213(c) is accepted as having been unintentionally delayed.

Receipt of the $750 petition fee is acknowledged.

Telephone inquiries regarding this decision should be directed to the undersigned at (571)272-3207.

Cliff Congo
Petitions Attorney
Office of Petitions

UNITED STATES PATENT AND TRADEMARK OFFICE

Commissioner for Patents
United States Patent and Trademark Office
P.O. Box 1450
Alexandria, VA 22313-1450
www.uspto.gov

COPY MAILED

SEP 0 5 2006

OFFICE OF PETITIONS

G. F. Gallinger
7420 Milner Dr.
Colorado Springs, CO 80920

In re Application of :
Riggs, et al. :
Application No. 10/685,854 : ON PETITION
Filed: October 15,2003 :
Attorney Docket No. LAS_THR2.HOL

This is a decision on the petition under 37 CFR 1.181 to withdraw the holding of abandonment filed June 30, 2006.

The petition under 37 CFR 1.181(a) to withdraw the holding of abandonment is **granted**.

This application was held abandoned on January 31, 2006, after it was believed that no response was received to the Notice to File Corrected Application Papers mailed December 30, 2005. The notice allowed a non-extendable period for reply of one (1) month from its mailing date. A Notice of Abandonment was mailed on May 10, 2006, indicating that a reply to the notice was not received.

The instant petition maintains that a response to the notice was mailed on January 20, 2006. A copy of the response containing a certificate of mailing dated January 30, 2006,accompanied the petition.

Based on the aforementioned, it appears that the application was improperly held abandoned as a proper response was mailed prior to expiration of the period for reply. The holding of abandonment is withdrawn, accordingly. No petition fee is due.

The application file is being forwarded to the Office of Patent Publications further processing.

Kenya A. McLaughlin
Petitions Attorney
Office of Petitions

UNITED STATES PATENT AND TRADEMARK OFFICE

Commissioner for Patents
United States Patent and Trademark Office
P.O. Box 1450
Alexandria, VA 22313-1450
www.uspto.gov

MORRISON & FOERSTER LLP
1650 TYSONS BOULEVARD
SUITE 400
MCLEAN, VA 22102

COPY MAILED

JUN 29 2007

OFFICE OF PETITIONS

In re Application of :
Horst HAUSSECKER, et al :
Application No. 10/685,867 : DECISION ON PETITION
Filed: October 14, 2003 : TO WITHDRAW
Attorney Docket No. 070702008320 : FROM RECORD
:

This is a decision on the Request to Withdraw as attorney or agent of record under 37 C.F.R. § 1.36(b), filed March 13, 2007.

The request is **DISMISSED** as moot.

A review of the file record indicates that the power of attorney to Morrison & Foerster LLP has been revoked by the assignee of the patent application on September 28, 2006. Accordingly, the request to withdraw under 37 C.F.R. § 1.36(b) is moot.

The correspondence address of record has been changed and the new correspondence address is the address indicated below.

Telephone inquires concerning this decision should be directed to Diane Goodwyn at 571-272-6735.

April Wise
Petitions Examiner
Office of Petitions

cc: RAJ S. DAVE
DARBY & DARBY P.C.
1500 K STREET, N.W.
SUITE 250
WASHINGTON, D.C 20005-1714

UNITED STATES PATENT AND TRADEMARK OFFICE

UNITED STATES DEPARTMENT OF COMMERCE
United States Patent and Trademark Office
Address: COMMISSIONER FOR PATENTS
P.O. Box 1450
Alexandria, Virginia 22313-1450
www.uspto.gov

APPLICATION NUMBER	FILING OR 371 (c) DATE	FIRST NAMED APPLICANT	ATTY. DOCKET NO./TITLE
10/685,867	10/14/2003	Horst Haussecker	070702008320

CONFIRMATION NO. 6650

OC000000024103433

25227
MORRISON & FOERSTER LLP
1650 TYSONS BOULEVARD
SUITE 400
MCLEAN, VA 22102

Date Mailed: 05/29/2007

NOTICE REGARDING CHANGE OF POWER OF ATTORNEY

This is in response to the Power of Attorney filed 04/13/2007.

- The Power of Attorney to you in this application has been revoked by the assignee who has intervened as provided by 37 CFR 3.71. Future correspondence will be mailed to the new address of record(37 CFR 1.33).

Diane Goodwyn

Office of Initial Patent Examination (571) 272-4000, or 1-800-PTO-9199

FORMER ATTORNEY/AGENT COPY

UNITED STATES PATENT AND TRADEMARK OFFICE

UNITED STATES DEPARTMENT OF COMMERCE
United States Patent and Trademark Office
Address: COMMISSIONER FOR PATENTS
P.O. Box 1450
Alexandria, Virginia 22313-1450
www.uspto.gov

APPLICATION NUMBER	FILING OR 371 (c) DATE	FIRST NAMED APPLICANT	ATTY. DOCKET NO./TITLE
10/685,867	10/14/2003	Horst Haussecker	070702008320

CONFIRMATION NO. 6650

OC000000024103434

7278
DARBY & DARBY P.C.
P.O. BOX 770
Church Street Station
New York, NY 10008-0770

Date Mailed: 05/29/2007

NOTICE OF ACCEPTANCE OF POWER OF ATTORNEY

This is in response to the Power of Attorney filed 04/13/2007.

The Power of Attorney in this application is accepted. Correspondence in this application will be mailed to the above address as provided by 37 CFR 1.33.

Office of Initial Patent Examination (571) 272-4000, or 1-800-PTO-9199
ATTORNEY/APPLICANT COPY

UNITED STATES PATENT AND TRADEMARK OFFICE

UNITED STATES DEPARTMENT OF COMMERCE
United States Patent and Trademark Office
Address: COMMISSIONER FOR PATENTS
P.O. Box 1450
Alexandria, Virginia 22313-1450
www.uspto.gov

APPLICATION NUMBER	FILING OR 371 (c) DATE	FIRST NAMED APPLICANT	ATTY. DOCKET NO./TITLE
10/685,867	10/14/2003	Horst Haussecker	070702008320

CONFIRMATION NO. 6650

OC000000024103433

25227
MORRISON & FOERSTER LLP
1650 TYSONS BOULEVARD
SUITE 400
MCLEAN, VA 22102

Date Mailed: 05/29/2007

NOTICE REGARDING CHANGE OF POWER OF ATTORNEY

This is in response to the Power of Attorney filed 04/13/2007.

- The Power of Attorney to you in this application has been revoked by the assignee who has intervened as provided by 37 CFR 3.71. Future correspondence will be mailed to the new address of record(37 CFR 1.33).

Diane Goodwin

Office of Initial Patent Examination (571) 272-4000, or 1-800-PTO-9199
NEW ATTORNEY/AGENT COPY

UNITED STATES PATENT AND TRADEMARK OFFICE

Commissioner for Patents
United States Patent and Trademark Office
P.O. Box 1450
Alexandria, VA 22313-1450
www.uspto.gov

Client 21058
c/o DARBY & DARBY P.C.
P.O. BOX 770
CHURCH STREET STATION
NEW YORK, NY 10008-0770

RECEIVED

JAN 05 2009

OFFICE OF PETITIONS

In re Application of :
Horst Haussecker et al :
Application No. 10/685,867 :
Filed: October 14, 2003 :
Attorney Docket No. 21058/1206449-US1

ON PETITION

This is a decision on the petition, filed December 29, 2008 under 37 CFR 1.313(c)(2) to withdraw the above-identified application from issue after payment of the issue fee.

The petition is **GRANTED**.

The above-identified application is withdrawn from issue for consideration of a submission under 37 CFR 1.114 (request for continued examination). See 37 CFR 1.313(c)(2).

Petitioner is advised that the issue fee paid on December 23, 2008 in the above-identified application cannot be refunded. If, however, the above-identified application is again allowed, petitioner may request that it be applied towards the issue fee required by the new Notice of Allowance.[1]

Telephone inquiries should be directed to Irvin Dingle at (571) 272-3210.

This matter is being referred to Technology Center AU 2624 for processing of the request for continued examination under 37 CFR 1.114 and for consideration of the concurrently filed Information Disclosure Statement.

/Irvin Dingle/
Irvin Dingle
Petitions Examiner
Office of Petitions

---

[1] The request to apply the issue fee to the new Notice may be satisfied by completing and returning the new Issue Fee Transmittal Form PTOL-85(b), which includes the following language thereon: Commissioner for Patents is requested to apply the Issue Fee and Publication Fee (if any) or re-apply any previously paid issue fee to the application identified above. Petitioner is advised that, whether a fee is indicated as being due or not, the Issue Fee Transmittal Form **must** be completed and timely submitted to avoid abandonment. Note the language in bold text on the first page of the Notice of Allowance and Fee(s) Due (PTOL-85).

UNITED STATES PATENT AND TRADEMARK OFFICE

Commissioner for Patents
United States Patent and Trademark Office
P.O. Box 1450
Alexandria, VA 22313-1450
www.uspto.gov

COPY MAILED

AUG 10 2009

OFFICE OF PETITIONS

Client 21058
c/o DARBY & DARBY P.C.
P.O. BOX 770
CHURCH STREET STATION
NEW YORK NY 10008-0770

In re Application of :
Horst Haussecker et al. :
Application No. 10/685,867 : DECISION ON PETITION
Filed: October 14, 2003 : TO WITHDRAW
Attorney Docket No. **21058/1206449-US1** : FROM RECORD
:

This is a decision on the Request to Withdraw as attorney or agent of record under 37 CFR § 1.36(b), filed July 13, 2009.

The request is **NOT APPROVED** as moot.

A review of the file record indicates that the power of attorney to attorneys/agents associated with Customer Number 75172 has been revoked by the assignee of the patent application on April 13, 2009. Accordingly, the request to withdraw under 37 C.F.R. § 1.36(b) is moot.

All future communications from the Office will continue to be directed to the below-listed address until otherwise notified by applicant.

Telephone inquires concerning this decision should be directed to JoAnne Burke at 571-272-4584.

JoAnne Burke
Petitions Examiner
Office of Petitions

cc: PILLSBURY WINTHROP SHAW PITTMAN LLP
P.O. BOX 10500
MCLEAN, VA 22102

UNITED STATES PATENT AND TRADEMARK OFFICE

Commissioner for Patents
United States Patent and Trademark Office
P.O. Box 1450
Alexandria, VA 22313-1450
www.uspto.gov

DARBY & DARBY P.C.
P.O. BOX 770
CHURCH STREET STATION
NEW YORK, NY 10008-0770

COPY MAILED

AUG 3 1 2009

OFFICE OF PETITIONS

In re Application of	:	
Horst Haussecker et al.	:	
Application No. 10/685,867	:	DECISION ON PETITION
Filed: October 14, 2003	:	TO WITHDRAW
Attorney Docket No. 21058/1206449-US1	:	FROM RECORD
	:	

This is a decision on the Request to Withdraw as attorney or agent under 37 C.F.R. § 1.36(b) filed August 17, 2009

The request is **NOT APPROVED**.

A review of the file record indicates that Eduard E. Drake or any attorneys associated with Customer Number 07278 does not have power of attorney or was ever given power of attorney in this patent application. Accordingly, the request to withdraw under 37 CFR § 1.36(b) is not applicable.

All future communications from the Office will continue to be directed to the address of record until otherwise properly notified by the applicant.

Telephone inquires concerning this decision should be directed to JoAnne Burke at 571-272-4584.

JoAnne Burke
Petitions Examiner
Office of Petitions

UNITED STATES PATENT AND TRADEMARK OFFICE

Commissioner for Patents
United States Patent and Trademark Office
P.O. Box 1450
Alexandria, VA 22313-1450
www.uspto.gov

STEPHEN B. ACKERMAN
28 DAVIS AVENUE
POUGHKEEPSIE NY 12603

COPY MAILED
NOV 0 1 2006
OFFICE OF PETITIONS

In re Application of	:	
LIN	:	
Application No. 10/685,872	:	DECISION GRANTING PETITION
Filed: October 15, 2003	:	UNDER 37 CFR 1.313(c)(2)
Attorney Docket No. MEG02-015	:	

This is a decision on the petition under 37 CFR 1.313(c)(2), filed October 30, 2006, to withdraw the above-identified application from issue after payment of the issue fee.

The petition is **GRANTED**.

The above-identified application is withdrawn from issue for consideration of a submission under 37 CFR 1.114 (request for continued examination). *See* 37 CFR 1.313(c)(2).

Petitioner is advised that the issue fee paid on September 21, 2006 cannot be refunded. If, however, this application is again allowed, petitioner may request that it be applied towards the issue fee required by the new Notice of Allowance.[1]

Telephone inquiries regarding this decision should be directed to Patricia Volpe at 571-272-6825.

This application is being referred to Technology Center AU 2822 for processing of the request for continued examination under 37 CFR 1.114 and for consideration of the concurrently filed Amendment.

/Frances Hicks/
Frances Hicks
Petitions Examiner
Office of Petitions

[1] *The request to apply the issue fee to the new Notice may be satisfied by completing and returning the new Part B – Fee(s) Transmittal Form (along with any balance due at the time of submission). Petitioner is advised that the Issue Fee Transmittal Form must be completed and timely submitted to avoid abandonment of the application.*

SPE RESPONSE FOR CERTIFICATE OF CORRECTION

DATE : 2/2/09 Paper No.: —

TO SPE OF : ART UNIT 3751

SUBJECT : Request for Certificate of Correction for Appl. No.: 10/685877 Patent No.: 7293826B2

Please respond to this request for a certificate of correction within 7 days.

FOR IFW FILES:

Please review the requested changes/corrections as shown in the **COCIN** document(s) in the IFW application image. No new matter should be introduced, nor should the scope or meaning of the claims be changed.

Please complete the response (see below) and forward the completed response to scanning using document code **COCX**.

FOR PAPER FILES:

Please review the requested changes/corrections as shown in the attached certificate of correction. Please complete this form (see below) and forward it with the file to:

Certificates of Correction Branch (CofC)
South Tower - 9A22
Palm Location 7580

Virginia Tolbert
Certificates of Correction Branch
703-308-9390 ext. 113

Thank You For Your Assistance

The request for issuing the above-identified correction(s) is hereby:
Note your decision on the appropriate box.

- [X] **Approved** — **All** changes apply.
- [ ] **Approved in Part** — Specify below which changes **do not** apply.
- [ ] **Denied** — State the reasons for denial below.

Comments: Proposed changes are OK

GREGORY HUSON
SUPERVISORY PATENT EXAMINER
TECHNOLOGY CENTER 3700

SPE

3751
Art Unit

UNITED STATES PATENT AND TRADEMARK OFFICE

Commissioner for Patents
United States Patent and Trademark Office
P.O. Box 1450
Alexandria, VA 22313-1450
www.uspto.gov

PATENT LAW & VENTURE
GROUP
2424 S.E. BRISTOL, SUITE 300
NEWPORT BEACH, CA 92660

COPY MAILED

SEP 28 2007

OFFICE OF PETITIONS

In re Application of

Ken M. Stedman

Application No. 10/685,917

Filed: October 14, 2003

Attorney Docket No. Stedma.K-01

DECISION ON PETITION

This is a decision on the petition under 37 CFR 1.137(b), filed December 19, 2006, to revive the above-identified application.

The petition is **GRANTED**.

The above-cited application became abandoned for failure to reply in a timely manner to the non-final Office action mailed March 21, 2005, which set a shortened statutory period for reply of three (3) months. No extension of time pursuant to 37 CFR 1.136(a) was obtained within the statutory period. Accordingly, the application became abandoned on June 22, 2005. A Notice of Abandonment was mailed on November 10, 2005.

The amendment filed December 19, 2006, is noted and made of record.

The application is being forwarded to Technology Center 1700, GAU 1724 for further processing.

Telephone inquiries concerning this decision should be directed to the undersigned at (571) 272-3222.

Kenya A. McLaughlin
Petitions Attorney
Office of Petitions

UNITED STATES PATENT AND TRADEMARK OFFICE

05 JAN 2006

Commissioner for Patents
United States Patent and Trademark Office
P.O. Box 1450
Alexandria, VA 22313-1450
www.uspto.gov

Jeffrey M. Libby, Ph.D.
MENDEL BIOTECHNOLOGY C/O MOFO SF
425 Market Street
San Francisco, CA 94105

In re Application of	:
HEARD, Jacqueline, E., et al.	:DECISION ON PETITION UNDER
Application No. 10/685,922	: 37 CFR 1.78(a)(3) AND 1.78(a)(6)
Filed: October 14, 2003	:
Attorney Docket No.: MBI-0049 CIP	:

This is a decision on the "Petition To Accept An Unintentionally Delayed Claim Under 37 CFR 1.78(a)(3) filed November 17, 2005, treated herein as a petition under 37 CFR §§ 1.78(a)(3) and 1.78(a)(6) to accept an unintentionally delayed claim under 35 U.S.C. §§120, 365(c) and 119(e) for the benefit of the prior-filed applications set forth in the concurrently filed amendment.

The petitions are **GRANTED**.

The present nonprovisional application was filed after November 29, 2000, and the claim herein for the benefit of priority to the prior-filed nonprovisional applications is submitted after expiration of the period specified in 37 CFR 1.78(a)(2)(ii) and 1.78(a)(5)(ii). Therefore, this is a proper petition under 37 CFR 1.78(a)(3) and 1.78(a)(6).

A petition for acceptance of a claim for late priority under 37 CFR §§ 1.78(a)(3) and 1.78(a)(6) is only applicable to those applications filed on or after November 29, 2000. Further, the petition is appropriate only after the expiration of the period specified in 37 CFR §§ 1.78(a)(2)(ii) and 1.78(a)(5)(ii). In addition, the petition under 37 CFR §§ 1.78(a)(3) and 1.78(a)(6) must be accompanied by:

(1) the reference required by 35 U.S.C. §§ 120 and 119(e) and 37 CFR §§ 1.78(a)(2)(i) and 1.78(a)(5)(i) of the prior-filed application, unless previously submitted;

(2) the surcharge set forth in § 1.17(t); and

(3) a statement that the entire delay between the date the claim was due under 37 CFR §§ 1.78(a)(2)(ii) and 1.78(a)(5)(ii) and the date the claim was filed was unintentional. The Director may require additional where there is a question whether the delay was unintentional.

The petition complies with the requirements for a grantable petition under 37 CFR §§1.78(a)(3) and 1.78(a)(6) in that (1) a proper reference to the prior-filed applications has been included in an amendment to the first sentence of the specification following the title, as well as in an

Application Data Sheet, as provided by 37 CFR §§ 1.78(a)(2)(iii) and 1.78(a)(5)(iii);[1] (2) the surcharge fee required by 37 CFR 1.17(t) has been submitted; and (3) the petition contains a proper statement of unintentional delay. Accordingly, having found that the petition for acceptance of an unintentionally delayed claim for the benefit of priority under 35 U.S.C. §§ 120 and 119(e) to the prior-filed applications satisfies the conditions of 37 CFR §§ 1.78(a)(3) and 1.78(a)(6), the petition is granted.[2]

The granting of the petition to accept the delayed benefit claim to the prior-filed applications under 37 CFR §§ 1.78(a)(3) and 1.78(a)(6) should not be construed as meaning that this application is entitled to the benefit of the filing date of the prior-filed applications. In order for this application to be entitled to the benefit of the prior-filed applications, all other requirements under 35 U.S.C. §§120 and 365(c) and 1.78(a)(1) and (a)(2) and under 35 U.S.C. §119(e) and 37 CFR 1.78(a)(4) and (a)(5) must be met. Similarly, the fact that the corrected Filing Receipt accompanying this decision on petition includes the prior-filed applications should not be construed as meaning that applicant is entitled to the claim for benefit of priority to the prior-filed applications noted thereon. Accordingly, the examiner will, in due course, consider this benefit claim and determine whether this application is entitled to the benefit of the earlier filing date.

A corrected Filing Receipt, which includes the priority claim to the prior-filed applications, accompanies this decision on petition. Any questions concerning this matter may be directed to Richard M. Ross at (571) 272-3296. All other inquiries concerning either the examination procedures or status of the application should be directed to the Technology Center.

This matter is being referred to Technology Center Art Unit 1636 for appropriate action on the amendment submitted November 17, 2005, including consideration by the examiner of the claim for benefit of the prior-filed applications.

Boris Milef
Legal Examiner
Office of Petitions

ATTACHMENT : Corrected Filing Receipt

---

[1] The references to all but the first priority application contained in the original application papers were defective. With respect to the nonprovisional applications, the references were defective for failure to properly state the relationship between the applications (see 37 CFR 1.78(a)(2)(i)); with respect to the provisional applications, the references were defective because the applications were not filed within twelve months of the present application and it was not made clear through which intermediate applications the benefit was being claimed (see MPEP § 201.11).

[2] It is noted that applicants' petition includes a request that the surcharge related to the present petition be waived. Any such waiver would be by way of a petition under 37 CFR 1.183. Because the present submission does not include such a petition, the fee waiver request has not been considered.

UNITED STATES PATENT AND TRADEMARK OFFICE

UNITED STATES DEPARTMENT OF COMMERCE
United States Patent and Trademark Office
Address: COMMISSIONER FOR PATENTS
P.O. Box 1450
Alexandria, Virginia 22313-1450
www.uspto.gov

APPL NO.	FILING OR 371 (c) DATE	ART UNIT	FIL FEE REC'D	ATTY.DOCKET NO	DRAWINGS	TOT CLMS	IND CLMS
10/685,922	10/14/2003	1636	1260	MBI-0049 CIP	17	28	4

CONFIRMATION NO. 8769

CORRECTED FILING RECEIPT

OC000000017766791

47550
MENDEL BIOTECHNOLOGY C/O MOFO SF
425 MARKET STREET
SAN FRANCISCO, CA 94105

Date Mailed: 01/03/2006

Receipt is acknowledged of this regular Patent Application. It will be considered in its order and you will be notified as to the results of the examination. Be sure to provide the U.S. APPLICATION NUMBER, FILING DATE, NAME OF APPLICANT, and TITLE OF INVENTION when inquiring about this application. Fees transmitted by check or draft are subject to collection. Please verify the accuracy of the data presented on this receipt. **If an error is noted on this Filing Receipt, please mail to the Commissioner for Patents P.O. Box 1450 Alexandria Va 22313-1450. Please provide a copy of this Filing Receipt with the changes noted thereon. If you received a "Notice to File Missing Parts" for this application, please submit any corrections to this Filing Receipt with your reply to the Notice. When the USPTO processes the reply to the Notice, the USPTO will generate another Filing Receipt incorporating the requested corrections (if appropriate).**

Applicant(s)

Jacqueline E. Heard, Stonington, CT;
Jose Luis Riechmann, Pasadena, CA;
Robert A. Creelman, Castro Valley, CA;
Oliver Ratcliffe, Oakland, CA;
Roderick W. Kumimoto, San Bruno, CA;
Neal Gutterson, Oakland, CA;
T. Lynne Reuber, San Mateo, CA;
Omaira Pineda, Vero Beach, FL;
Jeffrey M. Libby, Cupertino, CA;
Bradley K. Sherman, Berkeley, CA;

Power of Attorney: The patent practitioners associated with Customer Number **47550**.

Domestic Priority data as claimed by applicant

This application is a CIP of 09/810,836 03/16/2001 PAT 6,835,540
and is a CIP of 10/412,699 04/10/2003
which is a CIP of 09/394,519 09/13/1999 ABN
which claims benefit of 60/101,349 09/22/1998
and claims benefit of 60/108,734 11/17/1998
and said 10/412,699 04/10/2003
is a CIP of 09/533,392 03/22/2000 ABN
which claims benefit of 60/125,814 03/23/1999
This application 10/685,922
is a CIP of 09/713,994 11/16/2000
which claims benefit of 60/166,228 11/17/1999
and claims benefit of 60/227,439 08/22/2000

This application 10/685,922
is a CIP of 10/225,066 08/09/2002
which is a CIP of 10/171,468 06/14/2002 ABN
This application 10/685,922
is a CIP of 09/934,455 08/22/2001 ABN
and is a CIP of 10/225,068 08/09/2002

Foreign Applications

If Required, Foreign Filing License Granted: 12/08/2003

The country code and number of your priority application, to be used for filing abroad under the Paris Convention, is US10/685,922

Projected Publication Date: Not Applicable

Non-Publication Request: No

Early Publication Request: No

Title

Plant transcriptional regulators of abiotic stress

Preliminary Class

435

PROTECTING YOUR INVENTION OUTSIDE THE UNITED STATES

Since the rights granted by a U.S. patent extend only throughout the territory of the United States and have no effect in a foreign country, an inventor who wishes patent protection in another country must apply for a patent in a specific country or in regional patent offices. Applicants may wish to consider the filing of an international application under the Patent Cooperation Treaty (PCT). An international (PCT) application generally has the same effect as a regular national patent application in each PCT-member country. The PCT process **simplifies** the filing of patent applications on the same invention in member countries, but **does not result** in a grant of "an international patent" and does not eliminate the need of applicants to file additional documents and fees in countries where patent protection is desired.

Almost every country has its own patent law, and a person desiring a patent in a particular country must make an application for patent in that country in accordance with its particular laws. Since the laws of many countries differ in various respects from the patent law of the United States, applicants are advised to seek guidance from specific foreign countries to ensure that patent rights are not lost prematurely.

Applicants also are advised that in the case of inventions made in the United States, the Director of the USPTO must issue a license before applicants can apply for a patent in a foreign country. The filing of a U.S. patent application serves as a request for a foreign filing license. The application's filing receipt contains further information and guidance as to the status of applicant's license for foreign filing.

Applicants may wish to consult the USPTO booklet, "General Information Concerning Patents" (specifically, the section entitled "Treaties and Foreign Patents") for more information on timeframes and deadlines for filing foreign patent applications. The guide is available either by contacting the USPTO Contact Center at 800-786-9199, or it can be viewed on the USPTO website at http://www.uspto.gov/web/offices/pac/doc/general/index.html.

For information on preventing theft of your intellectual property (patents, trademarks and copyrights), you may

wish to consult the U.S. Government website, http://www.stopfakes.gov. Part of a Department of Commerce initiative, this website includes self-help "toolkits" giving innovators guidance on how to protect intellectual property in specific countries such as China, Korea and Mexico. For questions regarding patent enforcement issues, applicants may call the U.S. Government hotline at 1-866-999-HALT (1-866-999-4158).

LICENSE FOR FOREIGN FILING UNDER
Title 35, United States Code, Section 184
Title 37, Code of Federal Regulations, 5.11 & 5.15

GRANTED

The applicant has been granted a license under 35 U.S.C. 184, if the phrase "IF REQUIRED, FOREIGN FILING LICENSE GRANTED" followed by a date appears on this form. Such licenses are issued in all applications where the conditions for issuance of a license have been met, regardless of whether or not a license may be required as set forth in 37 CFR 5.15. The scope and limitations of this license are set forth in 37 CFR 5.15(a) unless an earlier license has been issued under 37 CFR 5.15(b). The license is subject to revocation upon written notification. The date indicated is the effective date of the license, unless an earlier license of similar scope has been granted under 37 CFR 5.13 or 5.14.

This license is to be retained by the licensee and may be used at any time on or after the effective date thereof unless it is revoked. This license is automatically transferred to any related applications(s) filed under 37 CFR 1.53(d). This license is not retroactive.

The grant of a license does not in any way lessen the responsibility of a licensee for the security of the subject matter as imposed by any Government contract or the provisions of existing laws relating to espionage and the national security or the export of technical data. Licensees should apprise themselves of current regulations especially with respect to certain countries, of other agencies, particularly the Office of Defense Trade Controls, Department of State (with respect to Arms, Munitions and Implements of War (22 CFR 121-128)); the Bureau of Industry and Security, Department of Commerce (15 CFR parts 730-774); the Office of Foreign Assets Control, Department of Treasury (31 CFR Parts 500+) and the Department of Energy.

NOT GRANTED

No license under 35 U.S.C. 184 has been granted at this time, if the phrase "IF REQUIRED, FOREIGN FILING LICENSE GRANTED" DOES NOT appear on this form. Applicant may still petition for a license under 37 CFR 5.12, if a license is desired before the expiration of 6 months from the filing date of the application. If 6 months has lapsed from the filing date of this application and the licensee has not received any indication of a secrecy order under 35 U.S.C. 181, the licensee may foreign file the application pursuant to 37 CFR 5.15(b).

UNITED STATES PATENT AND TRADEMARK OFFICE

Commissioner for Patents
United States Patent and Trademark Office
P.O. Box 1450
Alexandria, VA 22313-1450
www.uspto.gov

HAHN LOESER & PARKS, LLP
TWIN OAKS ESTATE
1225 W. MARKET STREET
AKRON OH 44313

COPY MAILED

AUG 1 8 2004

OFFICE OF PETITIONS

In re Application of :
James Forbes : ON PETITION
Application No. 10/685,943 :
Filed: October 15, 2003 :
Attorney Docket No.: 200405.00017 :
Title: Auto Rack Car With End Closure :

This is a decision on the petition filed June 22, 2004, requesting that the above-identified application be accorded a filing date of October 15, 2003 rather than the presently accorded March 29, 2004.

The application was filed on October 15, 2003, claiming status as a continuation of prior application No. 10/135,859. Petitioner discovered figures 17 and 18 as described in the specification had been inadvertently omitted and submitted a preliminary amendment on March 29, 2004 to add figures 17 and 18. On June 1,2004, the Office of Initial Patent Examination mailed a "Notice of Omitted Items in a Nonprovisional Application "("Notice") indicating figures 17-18 described in the specification appeared to have been omitted and stating that the filing date would be the date of receipt of the omitted drawings. Petitioner also received an updated filing receipt which changed the filing date to March 29, 2004.

In response, the present petition was filed on June 22, 2004. A review of the record shows an incorporation by reference statement incorporating the entire disclosure of the prior

application into the disclosure of the present application was included in the first sentence of the specification filed on October 15, 2003.

In view of the incorporation by reference of the prior application, figures 17-18 supplied on March 29, 2004, would not constitute new matter if they were part of the original disclosure of the prior application. Applicant state that application No. 10/135,859 contains the drawings referred to in the specification of the present application and that the drawings supplied on March 29, 2004 are the drawings which were not received on October 15, 2003.

Based on applicant's representation that the drawings which are described in the specification are a part of the disclosure of application No. 10/135,859 and the entire disclosure of application No. 10/135,859 was specifically incorporated by reference in the present application on October 15, 2003, it appears that the drawings were present in the Office on October 15, 2003, albeit in the file of another application, i.e., application No. 10/135,859. Therefore, on petition, the application may be accorded the requested filing date.

The petition is granted. Deposit account 15-0450 will be charged the $130.00 petition fee.

The petition fee will not be refunded, since the petition was required to accord the application the requested filing date.

Of course, the primary examiner is expected to compare the drawings supplied on March 29, 2004, to the disclosure of prior application No. 10/135,859 in order to verify that the drawings are, in fact, parts of the disclosure of the prior application.

A newly executed oath or declaration is not required under 37 CFR 1.51(b)(2) and 1.53(f) in a continuation or divisional application, provided that the specification and drawings filed in the continuation or divisional application contain no matter that would have been new matter in the prior application. See 37 CFR 1.63(d)(1). For initial processing purposes, it is presumed that the drawings filed March 29, 2004, contain no matter that would have been new matter in the prior application.

The application is being returned to Office of Initial Patent Examination for further processing with a filing date of **October 15, 2003**, using only the seventeen (17) sheets of drawings supplied on October 15, 2003.

Telephone inquiries related to this decision may be directed to the undersigned at (703) 306-0251 until September 24, 2004, thereafter at (571) 272-3215.

Charlema R. Grant

Charlema R. Grant
Petition Attorney
Office of Petitions

UNITED STATES PATENT AND TRADEMARK OFFICE

SEP 14 2004

Commissioner for Patents
United States Patent and Trademark Office
P.O. Box 1450
Alexandria, VA 22313-1450
www.uspto.gov

In re Application of :
Vernon D. Ortenzi *et al* : DECISION ON PETITION
Application No. 10/685,948 :
Filed: October 15, 2003 :
Attorney Docket No. 3356-137

This is a decision on the petition to make special filed on October 15, 2003. The petition is based upon the practice described in MPEP § 708.02(V) "Environmental Quality." Therefore, no petition fee is required.

The petition is dismissed.

The petition to make special based upon the practice in the above mentioned MPEP section is not deemed to satisfy all of the requirements thereof. Specifically, the invention both as claimed and disclosed, invention, is not limited to underground storage tanks as specified in the petition. Nor are the claimed and disclosed inventions limited to venting "polluting" gases.

Petitioner may file a renewed petition, provided that the filing is within the time parameter established by 37 CFR 1.181(f). The application remains ready for examination, in filing date order.

PETITION DISMISSED.

Stephen Marcus, Special Program Examiner,
Technology Center 3700

Dinsmore & Shohl, LLP
1900 Chemed Center
255 East Fifth Street
Cincinnati, OH 45202

UNITED STATES PATENT AND TRADEMARK OFFICE

Commissioner for Patents
United States Patent and Trademark Office
P.O. Box 1450
Alexandria, VA 22313-1450
www.uspto.gov

DUANE MORRIS, LLP
IP DEPARTMENT
30 SOUTH 17TH STREET
PHILADELPHIA PA 19103-4196

COPY MAILED

DEC 13 2006

OFFICE OF PETITIONS

In re Application of :
WENGER :
Application No. 10/685,954 : DECISION ON PETITION
Filed: October 15, 2003 : TO WITHDRAW
Attorney Docket No. H1799-00180 : FROM RECORD
:

This is a decision on the Request to Withdraw as attorney or agent of record under 37 C.F.R. § 1.36(b), filed October 3, 2006.

The request is **NOT APPROVED**.

A grantable request to withdraw as attorney/agent of record must be signed by every attorney/agent seeking to withdraw or contain a clear indication that one attorney is signing on behalf of another/others. A request to withdraw will not be approved unless at least 30 (thirty) days would remain between the date of approval and the later of the expiration date of a time to file a response or the expiration date of the maximum time period which can be extended under 37 C.F.R. § 1.136(a).

The Office cannot approve the request at this time since the reasons provided do not meet any of the conditions under the mandatory or permissive categories enumerated in 37 CFR 10.40. Section 10.40 of Title 37 of the Code of Federal Regulation states, "[a] practitioner shall not withdraw from employment in a proceeding before the Office without permission from the Office[.]" More specifically, 37 CFR 10.40 states, "[i]f paragraph (b) of this section is not applicable, a practitioner may not request permission to withdraw in matter pending before the Office unless such request or such withdrawal is" for one the permissive reasons listed in 37 CFR 10.40(c). The reasons set forth in the request, "assignee of record requested file be transferred to new attorney", does not meet any of the conditions set forth in 37 CFR 10.40.

In order to request or take action in a patent matter, the assignee must establish its ownership of the patent to the satisfaction of the Director. In this regard, **a Statement under 37 CFR 3.73(b)** must have either: (i) documentary evidence of **a chain of title from the original owner to the assignee** (*e.g.*, copy of an executed assignment), and a statement affirming that the documentary evidence of the chain of title from the original owner to the assignee was or concurrently is being

submitted for recordation pursuant to § 3.11; or (ii) a statement specifying where documentary evidence of a chain of title from the original owner to the assignee is recorded in the assignment records of the Office (*e.g.*, **reel and frame number**).

All future communications from the Office will continue to be directed to the above-listed address until otherwise notified by applicant.

Telephone inquiries concerning this decision should be directed to the undersigned at 571-272-7253.

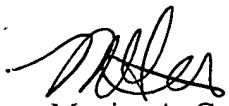

Monica A. Graves
Petitions Examiner
Office of Petitions

cc: **CHRISTOPHER B. AUSTIN**
MICHAEL BEST & FRIEDRICH LLP
100 E. WISCONSIN AVENUE, SUITE 3300
MILWAUKEE, WI 53202

UNITED STATES PATENT AND TRADEMARK OFFICE

Commissioner for Patents
United States Patent and Trademark Office
P.O. Box 1450
Alexandria, VA 22313-1450
www.uspto.gov

BLAKELY SOKOLOFF TAYLOR & ZAFMAN LLP
1279 OAKMEAD PARKWAY
SUNNYVALE, CA 94085-4040

COPY MAILED

JUL 07 2008

OFFICE OF PETITIONS

ON PETITION

In re Application of :
Nery STRASMAN, et al :
Application No. 10/685,958 :
Filed: October 14, 2003 :
Attorney Docket No. 5079P021C :

This is a decision on the petition under the unintentional provisions of 37 CFR 1.137(b), filed April 9, 2008, to revive the above-identified application.

The petition is **DISMISSED**.

The application became abandoned for failure to reply in a timely manner to the Notice to File Missing Parts of Nonprovisional Application (Notice), mailed May 2, 2007. The Notice set a period for reply of two (2) months from the mail date of the Notice. No extensions of time under the provisions of 37 CFR 1.136(a) were obtained. Accordingly, the application became abandoned on July 3, 2007.

A grantable petition under 37 CFR 1.137(b) must be accompanied by: (1) the required reply, unless previously filed; (2) the petition fee as set forth in 37 CFR 1.17(m); (3) a statement that the entire delay in filing the required reply from the due date for the reply until the filing of a grantable petition pursuant to 37 CFR 1.137(b) was unintentional; and (4) any terminal disclaimer (and fee as set forth in 37 CFR 1.20(d)) required by 37 CFR 1.137(d). Where there is a question as to whether either the abandonment or the delay in filing a petition under 37 CFR 1.137 was unintentional, the Director may require additional information. See MPEP 711.03(c)(II)(C) and (D). The instant petition lacks item(s) 3.

With respect to item 3: The record indicates that Tarek N. Fahmi was responsible for prosecution of the application when the reply necessary to avoid abandonment was due. Therefore, petitioner must provide a statement from Tarek N. Fahmi explaining why action was not timely taken to prevent the application from becoming abandoned. It is noted that in a response to the Notice to File Missing Parts received by the U.S. Patent and Trademark Office on July 19, 2004, Tarek N. Fahmi stated "applicant will be filing a continuation application."

It is not apparent whether the person signing the statement of unintentional delay was in a position to have firsthand or direct knowledge of the facts and circumstances of the delay at issue. Nevertheless, such statement is being treated as having been made as the result of a reasonable inquiry into the facts and circumstances of such delay. See 37 CFR 10.18(b) and Changes to Patent Practice and Procedure; Final Rule Notice, 62 Fed. Reg. 53131, 53178 (October 10, 1997), 1203 Off. Gaz. Pat. Office 63, 103 (October 21, 1997). In the event that such an inquiry has not been made, petitioner must make such an inquiry. If such inquiry results in the discovery that it is not correct that the entire delay in filing the required reply from the due date for the reply until the filing of a grantable petition pursuant to 37 CFR 1.137(b) was unintentional, petitioner must notify the Office.

Any request for reconsideration of this decision must be submitted within TWO (2) MONTHS from the mail date of this decision. Extensions of time under 37 CFR 1.136(a) are permitted. The reconsideration request should include a cover letter entitled "Renewed Petition under 37 CFR 1.137(b)." This is **not** a final agency action within the meaning of 5 U.S.C. § 704.

Further correspondence with respect to this matter should be addressed as follows:

By Mail:
Mail Stop PETITION
Commissioner for Patents
P. O. Box 1450
Alexandria, VA 22313-1450

By hand:
U. S. Patent and Trademark Office
Customer Service Window, Mail Stop Petitions
Randolph Building
401 Dulany Street
Alexandria, VA 22314

The centralized facsimile number is **(571) 273-8300.**

Telephone inquiries concerning this decision should be directed to Diane Goodwyn at (571) 272-6735.

Thurman Page
Petitions Examiner
Office of Petitions

cc: RECHES PATENTS
211 NORTH UNION STREET
SUITE 100
ALEXANDRIA, VA 22314

UNITED STATES PATENT AND TRADEMARK OFFICE

Commissioner for Patents
United States Patent and Trademark Office
P.O. Box 1450
Alexandria, VA 22313-1450
www.uspto.gov

BLAKELY SOKOLOFF TAYLOR & ZAFMAN LLP
1279 OAKMEAD PARKWAY
SUNNYVALE, CA 94085-4040

MAILED

MAR 0 3 2009

OFFICE OF PETITIONS

In re Application of :
Nery STRASMAN, et al :
Application No. 10/685,958 : ON PETITION
Filed: October 14, 2003 :
Attorney Docket No. 5079P021C :

This is a decision on the renewed petition under the unintentional provisions of 37 CFR 1.137(b), filed October 12, 2008, to revive the above-identified application.

The petition is **GRANTED**.

The application became abandoned for failure to reply in a timely manner to the Notice to File Missing Parts of Nonprovisional Application (Notice), mailed May 2, 2007. The Notice set a period for reply of two (2) months from the mail date of the Notice. No extensions of time under the provisions of 37 CFR 1.136(a) were obtained. Accordingly, the application became abandoned on July 3, 2007.

The petition satisfies the requirements of 37 CFR 1.137(b) in that petitioner has supplied (1) the reply in the form of a continuing application under 37 CFR 1.53(b); (2) the petition fee of $1540; and (3) a proper statement of unintentional delay.

The Office acknowledges the two (2) month extension of time filed with the renewed petition dated October 12, 2008

This application is being revived solely for purposes of continuity. As continuity has been established by this decision, the application is again abandoned in favor of continuing application No. 10/891,990, filed July 14, 2004.

Telephone inquiries concerning this decision should be directed to Diane Goodwyn at (571) 272-6735.

Thurman Page
Petitions Examiner
Office of Petitions

UNITED STATES PATENT AND TRADEMARK OFFICE

Commissioner for Patents
United States Patent and Trademark Office
P.O. Box 1450
Alexandria, VA 22313-1450
www.uspto.gov

August 22, 2006

FILE COPY

Patent No. : 6,997,579 B2
Ser. No. : 10/685961
Inventor(s) : Horiuchi, et al.
Issued : February 14, 2006
Title : **LAMP WITH REFLECTING MIRROR AND IMAGE PROJECTING APPARATUS**
Docket No. : 5077-000189/US

Re: Request for Certificate of Correction

Consideration has been given your request for the issuance of a certificate of correction for the above-identified patent.

The word "after "connected" insert --to--", purported to be in column 14, line 20, cannot be found in the printed patent.

In view of the foregoing, your request is hereby dismissed.

Elisha Evans
For Cecelia Newman, Supervisor
Decisions & Certificates
of Correction Branch
(703) 308-9390 ext. 110

HARNESS, DICKEY & PIERCE, P.L.C.
P.O. BOX 828
BLOOMFIELD HILLS MI 48303

CBN/eme

UNITED STATES PATENT AND TRADEMARK OFFICE

UNITED STATES DEPARTMENT OF COMMERCE
United States Patent and Trademark Office
Address: COMMISSIONER FOR PATENTS
P.O. Box 1450
Alexandria, Virginia 22313-1450
www.uspto.gov

MACMILLAN SOBANSKI & TODD, LLC
ONE MARITIME PLAZA FIFTH FLOOR
720 WATER STREET
TOLEDO, OH 43604-1619

Mail Date: 04/21/2010

Applicant	: David W. Bainbridge	: DECISION ON REQUEST FOR
Patent Number	: 7662468	: RECALCULATION of PATENT
Issue Date	: 02/16/2010	: TERM ADJUSTMENT IN VIEW
Appliction No	: 10/685,965	: OF WYETH AND NOTICE OF INTENT TO
Filed	: 10/15/2003	: ISSUE CERTIFICATE OF CORRECTION
		:

The Request for Recalculation is **GRANTED** to the extent indicated.

The patent term adjustment has been determined to be **0** days. The USPTO will *sua sponte* issue a certificate of correction reflecting the amount of PTA days determined by the recalculation.

Prior to the issuance of the certificate of correction, the USPTO will afford patentee an opportunity to be heard and request reconsideration. Accordingly, patentee has **one month or thirty (30) days**, whichever is longer, to file a request for reconsideration of this patent term adjustment calculation. See 35 U.S.C. 154(b)(3)(B)(ii) and 37 CFR 1.322(a)(4). No extensions of time will be granted under 37 CFR 1.136.

Patentee should use document code PET.OP if electronically filing a request for reconsideration of this patent term adjustment calculation. The patentee must also include the information required by 37 CFR 1.705(b)(2) and the fee required by 37 CFR 1.18(e). If patentee does not file a timely request for reconsideration of this patent term adjustment calculation including the information required by 37 CFR 1.705(b)(2) and the fee required by 37 CFR 1.18(e), the USPTO will issue a certificate of correction reflecting the PTA determination noted above.

Patentee should be aware that in order to preserve the right to review in the United States District Court for the District of Columbia of the USPTO patent term adjustment determination, patentee must ensure that he or she also take the steps required under 35 U.S.C. 154(b)(4)(A) in a timely manner. Nothing in the request for recalculation should be construed as providing an alternative time frame for commencing a civil action under 35 U.S.C. 154(b)(4)(A).

Any questions concerning this decision should be directed to the Office of Patent Legal Administration at 571-272-7702.

UNITED STATES PATENT AND TRADEMARK OFFICE

Commissioner for Patents
United States Patent and Trademark Office
P.O. Box 1450
Alexandria, VA 22313-1450
www.uspto.gov

ARTHUR G. YEAGER, P.A.
SUITE 1
245 EAST ADAMS STREET
JACKSONVILLE, FL 32202-3336

COPY MAILED

JUN 29 2005

OFFICE OF PETITIONS

In re Application of :
Norman E. Clifton Jr. :
Application No. 10/685,966 : ON PETITION
Filed: October 15, 2003 :
Attorney Docket No. D-7463 :

This is a decision on the petition under 37 CFR 1.137(b), filed June 13, 2005, to revive the above-identified application.

The petition is **GRANTED**.

The above-identified application became abandoned for failure to reply in a timely manner to the non-final Office action mailed October 26, 2004, which set a shortened statutory period for reply of three (3) months. No extensions of time under the provisions of 37 CFR 1.136(a) were obtained. Accordingly, the above-identified application became abandoned on January 27, 2005.

Telephone inquiries concerning this decision should be directed to Wan Laymon at (571) 272-3220.

This matter is being referred to Technology Center AU 3641.

Wan Laymon
Petitions Examiner
Office of Petitions
Office of the Deputy Commissioner
for Patent Examination Policy

UNITED STATES PATENT AND TRADEMARK OFFICE

Commissioner for Patents
United States Patent and Trademark Office
P.O. Box 1450
Alexandria, VA 22313-1450
www.uspto.gov

STEPHEN DONOVAN
ALLERGAN, INC.
2525 Dupont Drive, T2-7H
Irvine CA 92612

COPY MAILED

SEP 14 2005

OFFICE OF PETITIONS

In re Application of :
Katz et al. :
Application No. 10/685,986 : ON PETITION
Filed: October 14, 2003 :
Attorney Docket No. 17610(BOT) :

This is a decision on the petition under 37 CFR 1.10(c), filed August 10, 2005, requesting that the above-identified application be accorded a filing date of October 14, 2003, rather than the presently accorded filing date of October 15, 2003.

Petitioner alleges that the application was deposited in Express Mail service on October 14, 2003. In support of the allegation, the petition is accompanied by a copy of Express Mail label No. EV295682761US, indicating a date-in of "10/14". Further, the label contains a United States Postal Service (USPS) stamp of October 14, 2003. The same Express Mail label number was placed on the original application papers located in the official file.

In view of the above, the petition is **granted**.

No petition fee is necessary.

This application file will be forwarded to the Office of Initial Patent Examination to correct the filing date to October 14, 2003, and mail a corrected filing receipt.

Telephone inquiries should be directed to the undersigned at (571) 272-3211.

Christina Tartera Donnell

Christina Tartera Donnell
Senior Petitions Attorney
Office of Petitions

UNITED STATES PATENT AND TRADEMARK OFFICE

Commissioner for Patents
United States Patent and Trademark Office
P.O. Box 1450
Alexandria, VA 22313-1450
www.uspto.gov

COPY MAILED

AUG 29 2007

OFFICE OF PETITIONS

STEPHEN DONOVAN
ALLERGAN, INC.
2525 DUPONT DRIVE, T2-7H
IRVINE, CA 92612

In re Application of
KATZ, Howard I
Application No. 10/685,986
Filed: October 14, 2003
Attorney Docket No. **17610 (BOT)**

DECISION ON PETITION
TO WITHDRAW
FROM RECORD

This is a decision on the Request to Withdraw as attorney or agent of record under 37 C.F.R. § 1.36(b), filed December 29, 2006.

The request is **NOT APPROVED**.

A grantable request to withdraw as attorney/agent of record must be signed by every attorney/agent seeking to withdraw or contain a clear indication that one attorney is signing on behalf of another/others. A request to withdraw will not be approved unless at least 30 (thirty) days would remain between the date of approval and the later of the expiration date of a time to file a response or the expiration date of the maximum time period which can be extended under 37 C.F.R. § 1.136(a).

The Office cannot approve the request at this time since the reasons provided do not meet any of the conditions under the mandatory or permissive categories enumerated in 37 CFR 10.40. Section 10.40 of Title 37 of the Code of Federal Regulation states, "[a] practitioner shall not withdraw from employment in a proceeding before the Office without permission from the Office[.]" More specifically, 37 CFR 10.40 states, "[i]f paragraph (b) of this section is not applicable, a practitioner may not request permission to withdraw in matter pending before the Office unless such request or such withdrawal is" for one the permissive reasons listed in 37 CFR 10.40(c). The reasons set forth in the request, (This application is no longer owned by Allergen), does not meet any the conditions set forth in 37 CFR 10.40.

In order to request or take action in a patent matter, the assignee must establish its ownership of the patent to the satisfaction of the Director. In this regard, a Statement under 37 CFR 3.73(b) must have either: (i) documentary evidence of a chain of title from the original owner to the assignee (*e.g.*, copy of an executed assignment), and a statement affirming that the documentary evidence of the chain of title from the original owner to the assignee was or concurrently is being submitted for recordation pursuant to § 3.11; or (ii) a statement specifying where documentary evidence of a chain of title from the original owner to the assignee is recorded in the assignment records of the Office (*e.g.*, reel and frame number).

All future communications from the Office will continue to be directed to the above-listed address until otherwise notified by applicant.

Telephone inquiries concerning this decision should be directed to Michelle R. Eason at 571-272- 4231.

Terri Williams
Petitions Examiner
Office of Petitions

cc: **Andrew M. Blumfield, M.D.**
The Headache Center of Southern California
320 Santa Fe Drive
Encinitas, CA 92024

UNITED STATES PATENT AND TRADEMARK OFFICE

COMMISSIONER FOR PATENTS
UNITED STATES PATENT AND TRADEMARK OFFICE
P.O. BOX 1450
ALEXANDRIA, VA 22313-1450
www.uspto.gov

Andre L. Marais
Blakely, Sokoloff, Taylor & Zapman LLP
12400 Wilshire Boulevard, Seventh Floor
Los Angeles, CA 90025-1030

In re Application of: Mark Anderson, et al.
Application No. 10/685,991
Filed: October 14, 2003
For: METHOD AND SYSTEM TO MODIFY GEOLOCATION ACTIVITIES BASED ON LOGGED QEURY INFORMATION

DECISION ON PETITION UNDER 37 C.F.R. § 1.84(a)(2) TO ACCEPT COLOR DRAWINGS

This is a decision on the petition under 37 C.F.R. § 1.84(a)(2), filed October 14, 2003, requesting acceptance of color drawings.

The petition requests that the color drawings be accepted in lieu of black and white drawings.

A grantable petition under 37 C.F.R. § 1.84(a)(2) must be accompanied by a fee set forth under 37 C.F.R. § 1.17(h), 3 (three) sets of the color drawings in question, and the specification must contain, or be amended to contain, the following language as the first paragraph in that portion of the specification relating to the brief description of the drawings:

*"The patent or application file contains at least one drawing executed in color. Copies of this patent **or patent application publication** with color drawing(s) will be provided by the Patent and Trademark Office upon request and payment of the necessary fee."*

The petition was filed with the required (complete) specification statement, as noted above.

Therefore, the petition is **APPROVED**.

ZARNI MAUNG
SUPERVISORY PATENT EXAMINER

Zarni Maung
Supervisory Patent Examiner
Technology Center 2151
Computer Architecture, Software and Information Security

UNITED STATES PATENT AND TRADEMARK OFFICE

COMMISSIONER FOR PATENTS
UNITED STATES PATENT AND TRADEMARK OFFICE
P.O. BOX 1450
ALEXANDRIA, VA 22313-1450
www.uspto.gov

JJGJR.: 09-04

Paper No: __

LUMEN INTELLECTUAL
PROPERTY SERVICES, INC.
2345 YALE STREET, 2ND FLOOR
PALO ALTO CA 94306

COPY MAILED

SEP 30 2004

OFFICE OF PETITIONS

In re Application of
Grigorov, et al. :
Application No. 10/685,993 : ON PETITION
Filed: 14 October, 2003 :
Attorney Docket No. RTS-103/CIP :

This is a decision on the petition under ¶(a) of 37 C.F.R. §1.47, filed on 3 August, 2004.

The petition is **DISMISSED**.

NOTES:

(1) Any reply must include a renewed petition (and fee) must include a petition under 37 C.F.R. §1.47 and must be submitted within two (2) months from the mail date of this decision. Extensions of time under 37 C.F.R. §1.136(a) are permitted. The reconsideration request should include a cover letter entitled "Petition under 37 C.F.R. §1.47";

(2) Thereafter, there will be no further reconsideration of this matter.

BACKGROUND

The record indicates:

- the application was filed on 14 October, 2003, without, *inter alia*, a fully executed oath or declaration;

- the Office mailed a Notice of Missing Parts (*inter alia*, oath/declaration) on 1 April, 2004, with a response due absent extension of time on or before 1 June, 2004;

- on 3 August, 2004, Petitioner filed (without benefit of a certificate of mailing under 37 C.F.R. §1.8 or a general fee authorization), *inter alia*, a request and fee for a two- (2-) month extension of time, an oath/declaration signed by co-inventors A. Ze'ev Hed, Dmitry N. Rogachev, Kevin P. Shambrook and Alan W. Tamarelli on behalf of themselves and the non-signing inventor Leonid N. Grigorov, along with the petition of Tianhau Gu (Reg. No. 52,480) and the statement of Michael H. Shambrook (company secretary) and copies statements of Email exchanges–but not the actual documents or transmittal letters;

- while it is somewhat unclear as to whether Petitioner transmitted only the oath/declaration, and not the entire application (specification: description abstract claims and drawings) to the non-signing inventor Mr. Grigorov, what is clear is that a reply was due on or before 1 June, 2004, and Petitioner obtained an extension of time through Monday, 2 August, 2004, but did not file the reply until Tuesday, 3 August, 2004–thus, the application appears to have gone abandoned prior to the filing of the instant petition.

ANALYSIS

The regulations at 37 C.F.R. §1.47 provide in pertinent part:

> **§ 1.47 Filing when an inventor refuses to sign or cannot be reached.**
> (a) If a joint inventor refuses to join in an application for patent or cannot be found or reached after diligent effort, the application may be made by the other inventor on behalf of himself or herself and the nonsigning inventor. The oath or declaration in such an application must be accompanied by a petition including proof of the pertinent facts, the fee set forth in § 1.17(h), and the last known address of the nonsigning inventor. The nonsigning inventor may subsequently join in the application by filing an oath or declaration complying with §1.63.
>
> * * *

The regulations at 37 C.F.R. §1.63 provide in pertinent part:

> **§1.63 Oath or declaration.**
>
> (b) In addition to meeting the requirements of paragraph (a)of this section, the oath or declaration must also:
>
> (1)Identify the application to which it is directed;

(2) State that the person making the oath or declaration has reviewed and understands the contents of the application, Including the claims, as amended by any amendment specifically referred to in the oath or declaration; and

(3) State that the person making the oath or declaration acknowledges the duty to disclose to the Office all information known to the person to be material to patentability as defined in § 1.56.

Thus, a copy of the entire application must be sent to the last known address of the non-signing inventor (or the estate representative) with a request that he/she sign the declaration for the patent application--and evidence of that transmittal submitted.

And a reasonable effort must be made to ascertain a current or last known address.

Alternatively, an oath or declaration for the patent application in compliance with 37 C.F.R. §§1.63 and 1.64 must be presented.

The declaration must set forth the inventor's residence, citizenship and post office address. An oath or declaration in compliance with 37 C.F.R. §§1.63 and 1.64 signed by the Rule 1.47 applicant is required.[1]

CONCLUSION

The materials submitted thus far–because they are restatements of documents and not the documents themselves are unclear as to whether Petitioner provided a copy of the entire application to the non-signing inventor. Moreover, as noted above, it appears that the application went abandoned when Petitioner failed to reply on or before 2 August, 2004, and there was no certificate of mailing or general authorization for fees for an extension of time.

Petitioner must revive the instant application. Petitioner should submit a copy of the transmittal letter and should state the address in the petition over Petitioner's signature and registration number.

Therefore, the instant petition hereby is **dismissed**.

Further correspondence with respect to this matter should be addressed as follows:

---

[1] See: MPEP 409.03(b).

By mail: (Effective 1 May, 2003)[2]
Commissioner for Patents
P.O. Box 1450
Alexandria, VA 22313-1450

By FAX: IFW Formal Filings
(571-273-0025
ATTN.: Office of Petitions

By hand: Mail Stop: Petition
Customer Service Window
Lobby/Room 1B03
Crystal Plaza Two
220 20th Street S.
Arlington, VA 22202

Telephone inquiries regarding this decision should be directed to the undersigned at (571) 272-3214.

John J. Gillon, Jr.
Senior Attorney
Office of Petitions

[2] To determine the appropriate addresses for other subject-specific correspondence, refer to the USPTO Web site at www.uspto.gov.

UNITED STATES PATENT AND TRADEMARK OFFICE

Commissioner for Patents
United States Patent and Trademark Office
P.O. Box 1450
Alexandria, VA 22313-1450
www.uspto.gov

JOHNSON & STAINBROOK, LLP
3558 ROUND BARN BLVD., SUITE 203
SANTA ROSA, CA 95403

COPY MAILED

SEP 25 2006

OFFICE OF PETITIONS

In re Application of :
GRIGOROV, et al. :
Application No. 10/685,993 : DECISION ON PETITION
Filed: October 14, 2003 : TO WITHDRAW
Attorney Docket No. 001025.P6US : FROM RECORD
:

This is a decision on the Request to Withdraw as attorney or agent of record under 37 C.F.R. § 1.36(b), filed May 22, 2006.

The request is **APPROVED**.

A grantable request to withdraw as attorney/agent of record must be signed by every attorney/agent seeking to withdraw or contain a clear indication that one attorney is signing on behalf of another/others. A request to withdraw will not be approved unless at least 30 (thirty) days would remain between the date of approval and the later of the expiration date of a time to file a response or the expiration date of the maximum time period which can be extended under 37 C.F.R. § 1.136(a).

The request was signed by Craig M. Stainbrook on behalf of all attorneys of record. All attorneys/agents associated have been withdrawn. Applicant is reminded that there is no attorney of record at this time. Please note that the assignee, Room Temperature Superconductors, Inc., is only a partial assignee and has not properly intervened under 37 CFR 3.71. In order to conduct prosecution, all partial assignees must work with all inventors who have not assigned their rights, i.e. Leonid N. Girgorov.

All future correspondence will be directed to the first named inventor Leonid N. Grigorov at the address indicated below.

Telephone inquiries concerning this decision should be directed to Monica A. Graves at 571-272-7253.

Denise Pothier
Petitions Examiner
Office of Petitions

cc: **Leonid N. Girgorov**
210 Butterfield Drive
Novato, CA 94945

cc: **Room Temperature Superconductors, Inc**
301A N. Main Street
Sebastopol, CA 95472

UNITED STATES PATENT AND TRADEMARK OFFICE

Commissioner for Patents
United States Patent and Trademark Office
P.O. Box 1450
Alexandria, VA 22313-1450
www.uspto.gov

COPY MAILED

JUL 16 2009

OFFICE OF PETITIONS

DOCKET CLERK
P.O. DRAWER 800889
DALLAS TX 75380

In re Application of :
Prichard, et al. : LETTER REGARDING PTA
Application No. 10/685,994 :
Filed: October 15, 2003 :
Atty. Dkt. No.: 13039:239 :
(CRAN01-00239) :

This letter is in response to the "GOOD FAITH AND CANDOR LETTER REGARDING PATENT TERM ADJUSTMENT," filed March 18, 2009. The Office thanks applicants for their good faith and candor in bringing this to our attention.

The Determination of Patent Term Adjustment mailed December 18, 2008 indicated that the above-identified application was entitled to a patent term adjustment ("PTA") of 194 days. Applicants indicate that the correct adjustment is 130 days and direct the Office's attention to the amendment filed August 27, 2008.

The correct Patent Term Adjustment ("PTA") at the time of the allowance is 165 days.

As reflected in the Determination of Patent Term Adjustment mailed December 18, 2008, an adjustment of 309 days can be attributed to the Office in accordance with 37 CFR 1.702(a)(1). As further reflected by the Determination of Patent Term Adjustment, an adjustment of two days can be attributed to the Office in accordance with 37 CFR 1.702(a)(2).

The Determination of Patent Term Adjustment properly reflects a reduction of 144 days in accordance with 37 CFR 1.704.

The Office neglected to assess a reduction in connection with the Notice of Appeal filed August 15, 2008. A final Office action was mailed May 13, 2008. An amendment was filed July 21, 2008. This amendment failed to place the application in condition for allowance, as indicated by the Advisory Action mailed August 20, 2008. The time period for applicant to submit a proper reply to the final Office action continued to toll until the submission of the Notice of Appeal on August 15, 2008.

In accordance with 37 CFR 1.704(b), the adjustment is properly reduced two days, the reduction having commenced August 14, 2008, the day after the date that is three months after the date that the final Office action was mailed, and ended August 15, 2008, the date that a proper reply (Notice of Appeal) was filed.

The Determination of Patent Term Adjustment mailed December 18, 2008 errantly reflects an adjustment of 27 days in connection with the mailing of the Notice of Allowance on December 18, 2008. The adjustment is in error because the reply to the final Office action filed July 21, 2008 failed to place the application in condition for allowance, as indicated by the Advisory Action mailed August 20, 2008. Thus, adjustment pursuant to 37 CFR 1.702(a)(2) and 1.703(a)(3) is not warranted.

Accordingly, at the time of allowance, the application is entitled to an adjustment of 165 days (adjustments totalling 311 days less reductions totalling 146 days).

As applicants are advising us of a potential error in providing too much patent term adjustment in this application, no fee is due in connection with this matter.

The patent term adjustment indicated in the patent will include any additional patent term accrued pursuant to §§ 1.702(a)(4) and 1.702(b).

This application is being forward to the Office of Data Management for issuance of the patent.

Telephone inquiries specific to this decision should be directed to the undersigned at (571) 272-3205.

Alesia M. Brown
Petitions Attorney
Office of Petitions

Enclosure: Copy of Adjustment PAIR Calculation

PALM INTRANET

Day : Thursday
Date: 8/6/2009
Time: 09:55:47

PTA Calculations for Application: 10/685994			
Application Filing Date:	10/15/2003	PTO Delay (PTO):	338
Issue Date of Patent:		Three Years:	0
Pre-Issue Petitions:	0	Applicant Delay (APPL):	144
Post-Issue Petitions:	0	Total PTA (days):	165
PTO Delay Adjustment:	-29		

File Contents History

Number	Date	Contents Description	PTO	APPL	START
89	07/16/2009	RECORD A PETITION DECISION OF GRANTED FOR PATENT TERM ADJUSTMENT AFTER ALLOWANCE			
88	07/16/2009	ADJUSTMENT OF PTA CALCULATION BY PTO		27	
87	07/16/2009	ADJUSTMENT OF PTA CALCULATION BY PTO		2	
79	12/18/2008	MAIL NOTICE OF ALLOWANCE	27		62
78	12/17/2008	ISSUE REVISION COMPLETED			
77	10/28/2008	ALLOWED CASE RETURNED TO THE EXAMINER FOR CLERICAL PROCESSING			
76	10/28/2008	DOCUMENT VERIFICATION			
75	10/28/2008	NOTICE OF ALLOWANCE DATA VERIFICATION COMPLETED			
74	10/28/2008	CASE DOCKETED TO EXAMINER IN GAU			
73	10/27/2008	NOTICE OF ALLOWABILITY			
68	09/04/2008	DATE FORWARDED TO EXAMINER			
67	08/27/2008	AMENDMENT/ARGUMENT AFTER NOTICE OF APPEAL			
66	08/15/2008	NOTICE OF APPEAL FILED			
65	08/20/2008	MAIL ADVISORY ACTION (PTOL - 303)			
64	08/18/2008	ADVISORY ACTION (PTOL-303)			
63	07/29/2008	DATE FORWARDED TO EXAMINER			
62	07/21/2008	AMENDMENT AFTER FINAL REJECTION			
61	05/13/2008	MAIL FINAL REJECTION (PTOL - 326)	2		57

60	05/12/2008	FINAL REJECTION			
59	01/11/2008	MISCELLANEOUS INCOMING LETTER			
58	02/15/2008	DATE FORWARDED TO EXAMINER			
57	01/11/2008	RESPONSE AFTER NON-FINAL ACTION		6	55
56	10/15/2007	CASE DOCKETED TO EXAMINER IN GAU			
55	10/05/2007	MAIL NON-FINAL REJECTION			
54	10/01/2007	NON-FINAL REJECTION			
53	08/28/2007	DATE FORWARDED TO EXAMINER			
52	07/16/2007	RCE- AF PROCESSED			
51	08/28/2007	DATE FORWARDED TO EXAMINER			
50	08/20/2007	REQUEST FOR CONTINUED EXAMINATION (RCE)		5	43
49	08/28/2007	DISPOSAL FOR A RCE/CPA/129 (EXPRESS ABANDONMENT IF CPA)			
48	08/20/2007	WORKFLOW - REQUEST FOR RCE - BEGIN			
47	08/06/2007	MAIL ADVISORY ACTION (PTOL - 303)			
46	08/03/2007	ADVISORY ACTION (PTOL-303)			
45	07/19/2007	DATE FORWARDED TO EXAMINER			
44	07/16/2007	AMENDMENT AFTER FINAL REJECTION			
43	05/15/2007	MAIL FINAL REJECTION (PTOL - 326)			
42	05/14/2007	FINAL REJECTION			
41	12/04/2006	INFORMATION DISCLOSURE STATEMENT CONSIDERED			
40	02/28/2007	DATE FORWARDED TO EXAMINER			
39	02/08/2007	RESPONSE AFTER NON-FINAL ACTION		34	35
38	02/08/2007	REQUEST FOR EXTENSION OF TIME - GRANTED			
37	12/04/2006	REFERENCE CAPTURE ON IDS			
36.7	12/04/2006	INFORMATION DISCLOSURE STATEMENT (IDS) FILED			
36	12/04/2006	INFORMATION DISCLOSURE STATEMENT (IDS) FILED			
35	10/05/2006	MAIL NON-FINAL REJECTION			
34	10/02/2006	NON-FINAL REJECTION			
33	07/31/2006	DATE FORWARDED TO EXAMINER			
32	07/27/2006	AMENDMENT SUBMITTED/ENTERED WITH FILING OF CPA/RCE			

31	07/31/2006	DATE FORWARDED TO EXAMINER			
30	07/27/2006	REQUEST FOR CONTINUED EXAMINATION (RCE)		33	26
29	07/31/2006	DISPOSAL FOR A RCE/CPA/129 (EXPRESS ABANDONMENT IF CPA)			
28	07/27/2006	REQUEST FOR EXTENSION OF TIME - GRANTED			
27	07/27/2006	WORKFLOW - REQUEST FOR RCE - BEGIN			
26	03/24/2006	MAIL FINAL REJECTION (PTOL - 326)			
25	03/20/2006	FINAL REJECTION			
24	01/31/2006	DATE FORWARDED TO EXAMINER			
23	01/23/2006	RESPONSE AFTER NON-FINAL ACTION		3	22
22	10/20/2005	MAIL NON-FINAL REJECTION	309		-1
21	10/17/2005	NON-FINAL REJECTION			
20	08/25/2005	CASE DOCKETED TO EXAMINER IN GAU			
19	08/25/2005	CASE DOCKETED TO EXAMINER IN GAU			
18	06/09/2005	IFW TSS PROCESSING BY TECH CENTER COMPLETE			
17	06/09/2005	CASE DOCKETED TO EXAMINER IN GAU			
16	06/18/2004	PRELIMINARY AMENDMENT			
15	07/02/2004	APPLICATION RETURN FROM OIPE			
14	07/02/2004	APPLICATION RETURN TO OIPE			
13	07/02/2004	APPLICATION DISPATCHED FROM OIPE			
12	07/02/2004	APPLICATION IS NOW COMPLETE			
11	06/18/2004	PAYMENT OF ADDITIONAL FILING FEE/PREEXAM		63	7
10	06/18/2004	SMALL ENTITY STATEMENT (37 CFR 1.27)			
9	06/18/2004	A STATEMENT BY ONE OR MORE INVENTORS SATISFYING THE REQUIREMENT UNDER 35 USC 115, OATH OF THE APPLIC			
8	10/15/2003	CLAIM PRELIMINARY AMENDMENT			
7	01/16/2004	NOTICE MAILED--APPLICATION INCOMPLETE--FILING DATE ASSIGNED			
4	01/09/2004	CLEARED BY OIPE CSR			
3	01/09/2004	CASE CLASSIFIED BY OIPE			
2	12/07/2003	IFW SCAN & PACR AUTO SECURITY REVIEW			
1	10/15/2003	INITIAL EXAM TEAM NN			

UNITED STATES PATENT AND TRADEMARK OFFICE

Commissioner for Patents
United States Patent and Trademark Office
P.O. Box 1450
Alexandria, VA 22313-1450
www.uspto.gov

BALLARD SPAHR ANDREWS
& INGERSOLL, LLP
SUITE 1000
999 PEACHTREE STREET
ATLANTA GA 30309-3915

COPY MAILED

JUN 15 2009

OFFICE OF PETITIONS

In re Application of :
Dobbs, et al. :
Application No. 10/686,012 : DECISION
Filed: 15 October, 2003 :
Attorney Docket No. 05015.0175U3 :

This is a decision on the petition filed on 20 April, 2009, under the provisions of 37 C.F.R. §1.137(b), seeking revival of the application as having been abandoned due to unintentional delay.

The petition as considered under 37 C.F.R. §1.137(b) is **GRANTED**.

As to Allegations of
Unintentional Delay

The requirements of a grantable petition pursuant to 37 C.F.R. §1.137(b) are the petition and fee therefor, a reply, a proper statement of unintentional delay under the regulation, and, where applicable, a terminal disclaimer and fee. (However, it does not appear that a terminal disclaimer and fee are due here.)

Petitioners attentions always are directed to the Commentary at MPEP §711.03(c) for guidance as to satisfying the requirements for relief under 37 C.F.R. §1.137.

BACKGROUND

The record reflects as follows:

Petitioner failed to reply to the final Office action mailed on 16 September, 2008, with reply due absent extension of time on or before 16 December, 2008.

On 16 March, 2009, Petitioner filed an amendment after final, which the Examiner refused to enter and Petitioner—as one registered to practice before the Office—knew was not as of right and not a proper reply[1] if it did not *prima facie* place the application in condition for allowance, and on 23 March, 2009, the Examiner mailed an Advisory Action.

The application went abandoned by operation of law after midnight 16 March, 2008.

It does not appear that the Office mailed the Notice of Abandonment before a petition was filed.

On 20 April, 2009, Petitioner filed, *inter alia*, a petition pursuant to 37 C.F.R. §1.137(b), with fee, with a statement of unintentional delay and a reply was in the form of a request for continued examination (RCE) and fee and a submission under the provisions of 37 C.F.R. §1.114 in the form an amendment

The availability of applications and application papers online to applicants/practitioners who diligently associate their Customer Number with the respective application(s) now provides an applicant/practitioner on-demand information as to events/transactions in an application.

Out of an abundance of caution, Petitioners always are reminded that those registered to practice and all others who make representations before the Office **must** inquire into the underlying facts of representations made to the Office and support averments with the appropriate documentation–since all owe to the Office the continuing duty to disclose.[2]

STATUTES, REGULATIONS AND ANALYSIS

Congress has authorized the Commissioner to "revive an application if the delay is shown to the satisfaction of the Commissioner to have been "unavoidable." 35 U.S.C. §133 (1994).[3] The regulations at 37 C.F.R. §1.137(a) and (b) set forth the requirements for a Petitioner to revive a previously unavoidably or unintentionally, respectively, abandoned application under this congressional grant of authority.

---

[1] A proper reply is an amendment *prima facie* placing the application in condition for allowance, a Notice of Appeal, or an RCE (with fee and submission under 37 C.F.R. §1.114). (See: MPEP §711.03(c).)

[2] See supplement of 17 June, 1999. The Patent and Trademark Office is relying on petitioner's duty of candor and good faith and accepting a statement made by Petitioner. See Changes to Patent Practice and Procedure, 62 Fed. Reg. at 53160 and 53178, 1203 Off. Gaz. Pat. Office at 88 and 103 (responses to comments 64 and 109)(applicant obligated under 37 C.F.R. §10.18 to inquire into the underlying facts and circumstances when providing statements to the Patent and Trademark Office).

[3] 35 U.S.C. §133 provides:

35 U.S.C. §133 Time for prosecuting application.

Upon failure of the applicant to prosecute the application within six months after any action therein, of which notice has been given or mailed to the applicant, or within such shorter time, not less than thirty days, as fixed by the Commissioner in such action, the application shall be regarded as abandoned by the parties thereto, unless it be shown to the satisfaction of the Commissioner that such delay was unavoidable.

Unintentional delays are those that do not satisfy the very strict statutory and regulatory requirements of unavoidable delay, and also, by definition, are not intentional.[4]))

As to Allegations of
Unintentional Delay

The requirements of a grantable petition pursuant to 37 C.F.R. §1.137(b) are the petition and fee therefor, a reply, a proper statement of unintentional delay under the regulation, and, where applicable, a terminal disclaimer and fee.

It appears that the requirements under 37 C.F.R. §1.137(b) have been satisfied.

CONCLUSION

Accordingly, the petition under 37 C.F.R. §1.137(b) is **granted**.

The instant application is released to the Technology Center/AU 1611 for further processing in due course.

Petitioner may find it beneficial to view Private PAIR within a fortnight of the instant decision to ensure that the revival has been acknowledged by the TC/AU in response to this decision. It is noted that all inquiries with regard to that change in status need be directed to the OTC/AU where that change of status must be effected—that does not occur in the Office of Petitions.

[4] Therefore, by example, an unintentional delay in the reply might occur if the reply and transmittal form are to be prepared for shipment by the US Postal Service, but other pressing matters distract one's attention and the mail is not timely deposited for shipment.

Telephone inquiries regarding this decision may be directed to the undersigned at (571) 272-3214—it is noted, however, that all practice before the Office is in writing (see: 37 C.F.R. §1.2[5]) and the proper authority for action on any matter in this regard are the statutes (35 U.S.C.), regulations (37 C.F.R.) and the commentary on policy (MPEP). Therefore, no telephone discussion may be controlling or considered authority for Petitioner's action(s).

/John J. Gillon, Jr./
John J. Gillon, Jr.
Senior Attorney
Office of Petitions

[5] The regulations at 37 C.F.R. §1.2 provide:

§1.2 Business to be transacted in writing.

All business with the Patent and Trademark Office should be transacted in writing. The personal attendance of applicants or their attorneys or agents at the Patent and Trademark Office is unnecessary. The action of the Patent and Trademark Office will be based exclusively on the written record in the Office. No attention will be paid to any alleged oral promise, stipulation, or understanding in relation to which there is disagreement or doubt.

UNITED STATES PATENT AND TRADEMARK OFFICE

Commissioner for Patents
United States Patent and Trademark Office
P.O. Box 1450
Alexandria, VA 22313-1450
www.uspto.gov

In re Patent No. 7003746
Issue Date: February 21,2006
Application No. 10686022
Filed: October 14,2003
Attorney Docket No. 4057

:
:DECISION GRANTING PETITION
:UNDER 37 CFR 1.378(c)
:

This is a decision on the electronic petition, filed May 18,2010 ,under 37 CFR 1.378(c) to accept the unintentionally delayed payment of the 3.5 year maintenance fee for the above-identified patent.

The petition is **GRANTED**.

The maintenance fee is accepted, and the above-identified patent reinstated as of May 18,2010 . This decision also constitutes notice that the fee has been accepted. An electronic copy of the petition and this decision has been created as an entry in the Image File Wrapper. Nevertheless, petitioner should print and retain an independent copy.

Telephone inquiries related to this electronic decision should be directed to the Electronic Business Center at 1-866-217-9197.

PTO/SB/66 (03-09)
Approved for use through 03/31/2012. OMB 0651-0016
U.S. Patent and Trademark Office: U.S. DEPARTMENT OF COMMERCE
Under the Paperwork Reduction Act of 1995, no persons are required to respond to a collection of information unless it displays valid OMB control number.

PETITION TO ACCEPT UNINTENTIONALLY DELAYED PAYMENT OF MAINTENANCE FEE IN AN EXPIRED PATENT (37 CFR 1.378(c))

Patent Number	Issue Date (YYYY-MM-DD)	Application Number	Filing Date (YYYY-MM-DD)	Docket Number (if applicable)
7,003,746	2006-02-21	10/686,022	2003-10-14	45073174

CAUTION: Maintenance fee (and surcharge, if any) payment must correctly identify: (1) the patent number and (2) the application number of the actual U.S. application leading to issuance of that patent to ensure the fee(s) is/are associated with the correct patent. 37 CFR 1.366(c) and (d).

SMALL ENTITY

☒ Patentee claims, or has previously claimed, small entity status. See 37 CFR 1.27.

LOSS OF ENTITLEMENT TO SMALL ENTITY STATUS

☐ Patentee is no longer entitled to small entity status. See 37 CFR 1.27(g)

NOT Small Entity			Small Entity		
	Fee	Code		Fee	Code
◯	3 ½ year	(1551)	◉	3 ½ year	(2551)
◯	7 ½ year	(1552)	◯	7 ½ year	(2552)
◯	11 ½ year	(1553)	◯	11 ½ year	(2553)

SURCHARGE

The surcharge required by 37 CFR 1.20(i)(2) (Fee Code 1558) must be paid as a condition of accepting unintentionally delayed payment of the maintenance fee.

MAINTENANCE FEE (37 CFR 1.20(e)-(g))

The appropriate maintenance fee must be submitted with this petition.

STATEMENT

THE UNDERSIGNED CERTIFIES THAT THE DELAY IN PAYMENT OF THE MAINTENANCE FEE TO THIS PATENT WAS UNINTENTIONAL

PETITIONER(S) REQUEST THAT THE DELAYED PAYMENT OF THE MAINTENANCE FEE BE ACCEPTED AND THE PATENT REINSTATED

THIS PORTION MUST BE COMPLETED BY THE SIGNATORY OR SIGNATORIES

37 CFR 1.378(d) states: "Any petition under this section must be signed by an attorney or agent registered to practice before the Patent and Trademark Office, or by the patentee, the assignee, or other party in interest."

I certify, in accordance with 37 CFR 1.4(d)(4) that I am

◉ An attorney or agent registered to practice before the Patent and Trademark Office

◯ A sole patentee

◯ A joint patentee; I certify that I am authorized to sign this submission on behalf of all the other patentees.

◯ A joint patentee; all of whom are signing this e-petition

◯ The assignee of record of the entire interest

Patent Practitioner			
A signature of the applicant or representative is required in accordance with 37 CFR 1.33 and 10.18. Please see 37 CFR 1.4(d) for the form of the signature			
Signature	/Jeffrey D. Moy/	Date (YYYY-MM-DD)	2010-05-18
Name	Jeffrey D. Moy	Registration Number	39307

This collection of information is required by 37 CFR 1.378(c). The information is required to obtain or retain a benefit by the public which is to file (and by the USPTO to process) an application. Confidentiality is governed by 35 U.S.C. 122 and 37 CFR 1.11 and 1.14. This collection is estimated to take 1 hour to complete, including gathering, preparing, and submitting the completed application form to the USPTO. Time will vary depending upon the individual case. Any comments on the amount of time you require to complete this form and/ or suggestions for reducing this burden, should be sent to the Chief Information Officer, U.S. Patent and Trademark Office, U.S. Department of Commerce, P.O. Box 1450, Alexandria, VA 22313-1450. DO NOT SEND FEES OR COMPLETED FORMS TO THIS ADDRESS. **This form can only be used when in conjunction with EFS-Web. If this form is mailed to the USPTO, it may cause delays in reinstating the patent.**

Privacy Act Statement

The Privacy Act of 1974 (P.L. 93-579) requires that you be given certain information in connection with your submission of the attached form related to a patent application or patent. Accordingly, pursuant to the requirements of the Act, please be advised that: (1) the general authority for the collection of this information is 35 U.S.C. 2(b)(2); (2) furnishing of the information solicited is voluntary; and (3) the principal purpose for which the information is used by the U.S. Patent and Trademark Office is to process and/or examine your submission related to a patent application or patent. If you do not furnish the requested information, the U.S. Patent and Trademark Office may not be able to process and/or examine your submission, which may result in termination of proceedings or abandonment of the application or expiration of the patent.

The information provided by you in this form will be subject to the following routine uses:

1. The information on this form will be treated confidentially to the extent allowed under the Freedom of Information Act (5 U.S.C. 552) and the Privacy Act (5 U.S.C. 552a). Records from this system of records may be disclosed to the Department of Justice to determine whether the Freedom of Information Act requires disclosure of these records.

2. A record from this system of records may be disclosed, as a routine use, in the course of presenting evidence to a court, magistrate, or administrative tribunal, including disclosures to opposing counsel in the course of settlement negotiations.

3. A record in this system of records may be disclosed, as a routine use, to a Member of Congress submitting a request involving an individual, to whom the record pertains, when the individual has requested assistance from the Member with respect to the subject matter of the record.

4. A record in this system of records may be disclosed, as a routine use, to a contractor of the Agency having need for the information in order to perform a contract. Recipients of information shall be required to comply with the requirements of the Privacy Act of 1974, as amended, pursuant to 5 U.S.C. 552a(m).

5. A record related to an International Application filed under the Patent Cooperation Treaty in this system of records may be disclosed, as a routine use, to the International Bureau of the World Intellectual Property Organization, pursuant to the Patent Cooperation Treaty.

6. A record in this system of records may be disclosed, as a routine use, to another federal agency for purposes of National Security review (35 U.S.C. 181) and for review pursuant to the Atomic Energy Act (42 U.S.C. 218(c)).

7. A record from this system of records may be disclosed, as a routine use, to the Administrator, General Services, or his/her designee, during an inspection of records conducted by GSA as part of that agency's responsibility to recommend improvements in records management practices and programs, under authority of 44 U.S.C. 2904 and 2906. Such disclosure shall be made in accordance with the GSA regulations governing inspection of records for this purpose, and any other relevant (i.e., GSA or Commerce) directive. Such disclosure shall not be used to make determinations about individuals.

8. A record from this system of records may be disclosed, as a routine use, to the public after either publication of the application pursuant to 35 U.S.C. 122(b) or issuance of a patent pursuant to 35 U.S.C. 151. Further, a record may be disclosed, subject to the limitations of 37 CFR 1.14, as a routine use, to the public if the record was filed in an application which became abandoned or in which the proceedings were terminated and which application is referenced by either a published application, an application open to public inspections or an issued patent.

9. A record from this system of records may be disclosed, as a routine use, to a Federal, State, or local law enforcement agency, if the USPTO becomes aware of a violation or potential violation of law or regulation.

UNITED STATES PATENT AND TRADEMARK OFFICE

Commissioner for Patents
United States Patent and Trademark Office
P.O. Box 1450
Alexandria, VA 22313-1450
www.uspto.gov

FRIEDRICH KUEFFNER
SUITE 910
317 MADISON AVENUE
NEW YORK, NY 10017

COPY MAILED

APR 10 2007

OFFICE OF PETITIONS

In re Application of :
Kast et al. :
Application No. 10/686,039 : ON PETITION
Filed: October 15, 2003 :
Attorney Docket No. BE-118 :

This is a decision on the petition under 37 C.F.R. § 1.137(b), filed December 29, 2006, to revive the above-identified application.

The petition is **GRANTED.**

The petition satisfies the conditions for revival pursuant to the provisions of 37 CFR 1.137(b) in that (1) the reply in the form of the Issue Fee Transmittal with payment of the issue and publication fees; (2) the petition fee; and (3) the required statement of unintentional delay have been received. Accordingly, the response has been accepted as having been unintentionally delayed.

This matter is being referred to the Publishing Division for processing into a patent.

Telephone inquiries regarding this decision should be directed to the undersigned at (571) 272-3206.

Liana Walsh
Petitions Examiner
Office of Petitions

UNITED STATES PATENT AND TRADEMARK OFFICE

Commissioner for Patents
United States Patent and Trademark Office
P.O. Box 1450
Alexandria, VA 22313-1450
www.uspto.gov

MACMILLAN SOBANSKI & TODD
ONE MARITIME PLAZA FOURTH FLOOR
720 WATER STREET
TOLEDO OH 43604-1619

COPY MAILED

JUN 28 2005

OFFICE OF PETITIONS

In re Application of :
Eckart Op Den Camp :
Application No. 10/686,042 : DECISION GRANTING PETITION
Filed: October 15, 2003 : UNDER 37 CFR 1.137(b)
Attorney Docket No. 1-24802 :

This is a decision on the petition under 37 CFR 1.137(b), filed March 30, 2005, to revive the above-identified application.

The petition is **GRANTED**.

The petition satisfies the conditions for revival pursuant to the provisions of 37 CFR 1.137(b) in that (1) the reply in the form of an amendment; (2) the petition fee; and (3) the required statement of unintentional delay have been received. Accordingly, the reply to the nonfinal Office action of July 16, 2004, is accepted as having been unintentionally delayed.

Telephone inquiries concerning this decision should be directed to the undersigned at (571) 272-3208.

This matter is being referred to Technology Center AU 3679.

Karen Creasy

Karen Creasy
Petitions Examiner
Office of Petitions
Office of the Deputy Commissioner
for Patent Examination Policy

UNITED STATES PATENT AND TRADEMARK OFFICE

Commissioner for Patents
United States Patent and Trademark Office
P.O. Box 1450
Alexandria, VA 22313-1450
www.uspto.gov
DIW Jan-06

LAW OFFICE OF JOHN L. ISAAC
7114 W. JEFFERSON AVE.
SUITE 100
LAKEWOOD CO 80235-2309

COPY MAILED

JAN 10 2006

OFFICE OF PETITIONS

In re Application of :
Larry David :
Application No. 10/686,080 : DECISION ON PETITION
Filed: 15 October, 2003 :
Attorney Docket No. 7147.02.01 :

This is a decision on the petition filed on 26 September, 2005, under 37 CFR 1.137(b),[1] to revive the above-identified application.

The petition is **GRANTED**.

The application became abandoned on 22 May, 2005, for failure to timely file a response to the Office action in accordance with *Ex parte Quayle*[2], mailed on 21 March, 2005, which set a two (2) month shortened statutory period for reply. No extensions of the time for reply in accordance with 37 CFR 1.136(a) were obtained.

---

[1] Effective December 1, 1997, the provisions of 37 CFR 1.137(b) now provide that where the delay in reply was unintentional, a petition may be filed to revive an abandoned application or a lapsed patent pursuant to 37 CFR 1.137(b). A grantable petition filed under the provisions of 37 CFR 1.137(b) must be accompanied by:

(1) the required reply, unless previously filed. In a nonprovisional application abandoned for failure to prosecute, the required reply may be met by the filing of a continuing application. In a nonprovisional utility or plant application filed on or after June 8, 1995, and abandoned for failure to prosecute, the required reply may also be met by the filing of a request for continuing examination in compliance with § 1.114. In an application or patent, abandoned or lapsed for failure to pay the issue fee or any portion thereof, the required reply must be the payment of the issue fee or any outstanding balance thereof. In an application, abandoned for failure to pay the publication fee, the required reply must include payment of the publication fee.

(2) the petition fee as set forth in 37 CFR 1.17(m);

(3) a statement that the entire delay in filing the required reply from the due date for the reply until the filing of a grantable petition pursuant to 37 CFR 1.137(b) was unintentional. The Commissioner may required additional information where there is a question whether the delay was unintentional; and

(4) any terminal disclaimer (and fee as set forth in 37 CFR 1.20(d)) required pursuant to 37 CFR 1.137(c)).

[2] 1935 C.D. 11, 453 O.G. 213

The filing of the present petition precedes the mailing of Notice of Abandonment.

Petitioner's reply filed on 26 September, 2005, has been deemed to place this case in condition for allowance.

Receipt of the request for change of correspondence address is acknowledged.

The application file is being referred to Technology Center Art Unit 3711 for further processing.

Telephone inquiries concerning this matter may be directed to the undersigned at (571)272-3231.

Douglas I. Wood
Senior Petitions Attorney
Office of Petitions

UNITED STATES PATENT AND TRADEMARK OFFICE

Commissioner for Patents
United States Patent and Trademark Office
P.O. Box 1450
Alexandria, VA 22313-1450
www.uspto.gov

Morrison & Foerster LLP
Suite 300
1650 Tysons Blvd.
McLean, VA 22102

COPY MAILED

AUG 31 2007

OFFICE OF PETITIONS

In re Application of :
Narayan Sundararajan et al. :
Application No. 10/686,083 : DECISION ON PETITION
Filed: October 15, 2003 : TO WITHDRAW
Attorney Docket No. 42P13833D : FROM RECORD
:

This is a decision on the Request to Withdraw as attorney or agent of record under 37 C.F.R. § 1.36(b), filed April 6, 2007.

The request is **NOT APPROVED** as moot.

A review of the file record indicates that the power of attorney to Morrison & Foerster LLP has been revoked by the assignee of the patent application on August 20, 2007. Accordingly, the request to withdraw under 37 C.F.R. § 1.36(b) is moot.

All future communications from the Office will continue to be directed to the below-listed address until otherwise notified by applicant.

Telephone inquires concerning this decision should be directed to Terri Williams at 571-272-2991.

T. Williams

Terri Williams
Petitions Examiner
Office of Petitions

cc: **Darby & Darby P.C.**
P.O. Box 770
Church Street Station
New York, NY 10008-0770

OIPE
FEB 21 2008
PATENT & TRADEMARK OFFICE

10/686089

PATENT
Docket No.: 259052003600

IN THE UNITED STATES PATENT AND TRADEMARK OFFICE

In the Letters Patent of:

Tatsunori YAMAMOTO

Patent No.: 7,246,364

Issued: July 17, 2007

For: OPTICAL PICKUP DEVICE

REQUEST FOR CERTIFICATE OF CORRECTION
PURSUANT TO 37 CFR 1.323

Certificate of Correction
FEB 26 2008

Attention: Certificate of Correction Branch
Commissioner for Patents
P.O. Box 1450
Alexandria, VA 22313-1450

Dear Sir:

Upon reviewing the above-identified patent, Patentee noted a typographical error which should be corrected.

On the front page: under Inventors:

Delete the second inventor "Makoto AKINAGA"

The error was found in the application as filed by applicants. Please charge our Deposit Account No. 03-1952 in the amount of $100.00 covering the fee set forth in 37 CFR 1.20(a).

The error now sought to be corrected is an inadvertent typographical error the correction of which does not involve new matter or require reexamination.

02/22/2008 CNGUYEN2 00000016 031952 7246364
01 FC:1811 100.00 DA
RECEIVED-USPTO
Publication
FEB 26 2008

va-228293

Transmitted herewith is a proposed Certificate of Correction effecting such amendment. Patentee respectfully solicits the granting of the requested Certificate of Correction.

The Director is hereby authorized to charge any deficiency in the fees filed, asserted to be filed or which should have been filed herewith (or with any paper hereafter filed in this application by this firm) to our **Deposit Account No. 03-1952**, under Order No. **259052003600**.

Dated: February 21, 2008

Respectfully submitted,

By_____
Adam C. Lilling
Registration No.: 60,272

Morrison & Foerster LLP
1650 Tysons Blvd, Suite 400
McLean, Virginia 22102
Telephone: (703) 760-7334
Facsimile: (703) 760-7777

RECEIVED-USPTO
...nt Publication
FEB 26 2008

PTO/SB/44 (06-07)
Approved for use through 06/30/2007. OMB 0651-0033
U.S. Patent and Trademark Office; U.S. DEPARTMENT OF COMMERCE
Under the Paperwork Reduction Act of 1995, no persons are required to respond to a collection of information unless it displays a valid OMB control number.
(Also Form PTO-1050)

UNITED STATES PATENT AND TRADEMARK OFFICE
CERTIFICATE OF CORRECTION

PATENT NO.	:	7,246,364
APPLICATION NO.	:	10/686,089
ISSUE DATE	:	July 17, 2007
INVENTOR(S)	:	Tatsunori YAMAMOTO

It is certified that an error appears or errors appear in the above-identified patent and that said Letters Patent is hereby corrected as shown below:

On the front page; under Inventors:

Delete the second inventor "Makoto Akinaga"

APPROVED: /A.H./

RECEIVED-USPTO
Patent Publication
FEB 26 2008

MAILING ADDRESS OF SENDER (Please do not use customer number below):
Adam C. Lilling
MORRISON & FOERSTER LLP
1650 Tysons Blvd, Suite 400
McLean, Virginia 22102

va-228296

- UNITED STATES PATENT AND TRADEMARK OFFICE

Commissioner for Patents
United States Patent and Trademark Office
P.O. Box 1450
Alexandria, VA 22313-145

JUN 28 2005

KENNETH C. BROOKS
P.O. Box 10417
Austin, TX 78766-1417

In re application of
Brent Huntley :
Application No. 10/686,094 : **DECISION ON REQUEST**
Filed: October 15, 2003 : **FOR WITHDRAWAL OF**
For: INFANT CARRIER DOLLY : **ATTORNEY**

This is a decision on the request filed on June 10, 2005, under 37 CFR 1.36 and MPEP 402.06, requesting permission to withdraw as the attorney of record in the above-identified application.

The request is **NOT APPROVED as Moot**.

Under 37 CFR 1.36 an attorney may withdraw only upon application to and approval by the Commissioner. It should be noted that a withdrawal is effective when approved, not when filed. Besides giving due notice to his or her client and delivering to the client all papers and property to which the client is entitled as specified under 37 CFR 10.40, approval of such a request requires that the following conditions be met:

A) Each attorney of record must sign the notice of withdrawal, or the notice must contain a clear indication of one attorney signing on behalf of another, because the Office does not recognize law firms;

B) A proper reason for the withdrawal as enumerated in 37 CFR 10.40(b) or subsection (1)-(6) of 37 CFR 10.40(c) must be provided; and

C) If withdrawal is requested in accordance with 37 CFR 10.40(c) above, there must be at least 30 days between approval of the withdrawal and the later of the expiration date of a time period for reply or the expiration date of the period which can be obtained by a petition and fee for extension of time under 37 CFR 1.136(a).

The request to withdraw as attorney in the above-identified application is not approved as moot because the attorney making the request; Kenneth C. Brooks, does not now have, and apparently never has had, power of attorney in this application. There is no record of power of attorney ever being given to the attorney making the request, only designated as a correspondence address.

Steven N. Meyers
Special Programs Examiner
Patent Technology Center 3600
(571) 272-6611

SNM/pav: 06/21/05

CC : Brent Huntley
422 South Lexington Drive
Folsom, CA 95630-6543

UNITED STATES PATENT AND TRADEMARK OFFICE

Commissioner for Patents
United States Patent and Trademark Office
P.O. Box 1450
Alexandria, VA 22313-1450
www.uspto.gov

OCT 6 2004

In re Application of	:	
REINHARDT.	:	
Serial Number: 10/686,097	:	PETITION UNDER
Filed: October 14, 2003	:	M.P.E.P.708.02 V
For: ENVIRONMENTAL CLEAN-UP SYSTEM	:	

This is in response to the petition filed August 26, 2004, requesting that the above-identified application be granted Special Status under Sections 708.02 V of the MPEP and 37 CFR 1.102(c) (**no fee required**).

The request for Special Status considered under Section 708.02 V is granted because criteria under 37 CFR 1.102(c) has been met.

Accordingly the petition is **GRANTED.**

Richard Crispino, Special Programs Examiner
Technology Center 1700
Chemical and Materials Engineering

Bever Hoffman & Harms, LLP
Tri-Valley Office
1432 Concannon Blvd, Bldg G
Livermore, CA 94550

UNITED STATES PATENT AND TRADEMARK OFFICE

COMMISSIONER FOR PATENTS
UNITED STATES PATENT AND TRADEMARK OFFICE
P.O. BOX 1450
ALEXANDRIA, VA 22313-1450
www.uspto.gov

DCM

AUG 4 2004

In re Application of	:	
Karen Luke, et al.	:	
Serial Number: 10/686,098	:	PETITION UNDER
Filed: October 15, 2003	:	M.P.E.P.708.02 IV
For: ZEOLITE-CONTAINING CEMENT COMPOSITION	:	

This is in response to the petition filed May 10, 2004, requesting that the above-identified application be granted Special Status under Section 708.02 IV of the MPEP and 37 CFR 1.102(c) (**no fee required**).

The request for Special Status considered under Section 708.02 IV of the MPEP is granted because criteria under 37 CFR 1.102(c) has been met.

Accordingly the petition is **GRANTED.**

Marian C Knode

Marian C. Knode, Special Programs Examiner
Technology Center 1700
Chemical and Materials Engineering

CRAIG W. RODDY
HALLIBURTON ENERGY SERVICES
P.O. BOX 1431
DUNCAN, OK 73536-0440

UNITED STATES PATENT AND TRADEMARK OFFICE

Commissioner for Patents
United States Patent and Trademark Office
P.O. Box 1450
Alexandria, VA 22313-1450
www.uspto.gov

MAR 25 2005

MAILED

MAR 25 2005

OFFICE OF THE DIRECTOR
TC 3600

Craig W. Roddy
HALLIBURTON ENERGY SERVICES
P.O. Box 1431
Duncan, OK 73536-0440

In re application of
Karen Luke et al.
Application No. 10/686,098
Filed: October 15, 2003
For: ZEOLITE-CONTAINING CEMENT COMPOSITION

DECISION ON PETITION TO MAKE SPECIAL (APPLICANT'S AGE)

This is a decision on the petition submitted on May 10, 2004, under 37 CFR 1.102 (c) to make the above-identified application special under the accelerated examination procedure set forth in MPEP 708.02, Section IV: Applicant's Age.

The petition is **GRANTED**.

An application may be accorded special status upon the filing of a petition providing evidence showing that the applicant is at least 65 years old. Such a showing may be provided by evidence such as a birth certificate or a statement from the applicant.

The evidence submitted with the petition is a declaration signed by Mr. Gray indicating that he is at least 65 years of age.

The examiner is directed (1) to make an interference search for possible interfering applications, (2) to promptly examine this application out of turn, and (3) if any interfering application is discovered, to examine such application simultaneously and state in the first official letter of such application that it is being taken out of turn because of a possible interference.

Petitioner is advised that this application will continue to be special, throughout its entire prosecution and pendency, including interference or appeal, if any, only if petitioner makes a prompt ***bona fide*** effort, in response to each Office action, to place the application in condition for allowance, even if it is necessary to conduct an interview with the examiner to accomplish this purpose.

SUMMARY: Petition to Make Special **GRANTED**.

Steven N. Meyers
Special Programs Examiner
Patent Technology Center 3600
(703) 308-3868

SNM/pav: 03/15/05

UNITED STATES PATENT AND TRADEMARK OFFICE

COMMISSIONER FOR PATENTS
UNITED STATES PATENT AND TRADEMARK OFFICE
P.O. BOX 1450
ALEXANDRIA, VA 22313-1450
www.uspto.gov

Paper No.

Tarek N. Fahmi
BLAKELY SOKOLOFF TAYLOR & ZAFMAN
12400 Wilshire Boulevard
Seventh Floor
Los Angeles, CA 90025-1030

MAIL

DEC 3 0 2004

DIRECTOR OFFICE
TECHNOLOGY CENTER 2100

In re Application of:
Mark Anderson
Application No. 10/686,102
Filed: October 14, 2003
For: METHOD AND SYSTEM TO INITIATE GEOLOCATION ACTIVITIES ON DEMAND AND RESPONSIVE TO RECEIPT OF A QUERY

DECISION ON REQUEST TO WITHDRAW AS ATTORNEY OR AGENT

This is a decision on the Request To Withdraw from Representation filed October 14, 2004.

A grantable request to withdraw as attorney of record should indicate thereon the present mailing addresses of the attorney(s) who is/are withdrawing from the record and of the applicant. The request for withdrawal must be signed by every attorney seeking to withdraw or contain a clear indication that one attorney is signing on behalf of another/others. A request to withdraw will not be approved unless at least 30 (thirty) days would remain between the date of approval and the later of the expiration date of a time to file a response or the expiration date of the maximum time period which can be extended under 37 C.F.R. § 1. 136(a). The effective date of withdrawal being the date of decision and not the date of request. See M.P.E.P. § 402.06. 37 C.F.R. § 1.36 further requires that the applicant or patent owner be notified of the withdrawal of the attorney or agent.

The request filed October 14, 2004 meets all the requirements. Accordingly the request is **GRANTED**.

All future communications from the Office will be directed to the below-listed address until otherwise notified by applicant. This correspondence address is provided by the withdrawn attorney(s). Applicant is reminded of the obligation to promptly notify the Patent and Trademark Office (Office) of any change in correspondence address to ensure receipt of all communications from the Office.

James R. Matthews

for Vincent N. Trans
Special Program Examiner
Technology Center 2100
Computer Architecture, Software, and
Information Security
(571) 272-3613

cc: Andre L. Marais
SCHWEGMAN, LUNDBERG, WOESSNER & KLUTH, P.A.
1600 TCF Tower
121 South Eight Street
Minneapolis, MN 55402

UNITED STATES PATENT AND TRADEMARK OFFICE

COMMISSIONER FOR PATENTS
UNITED STATES PATENT AND TRADEMARK OFFICE
P.O. BOX 1450
ALEXANDRIA, VA 22313-1450
www.uspto.gov

BROOKS & CAMERON, PLLC
1221 NICOLLET MALL #500
MINNEAPOLIS, MN 55403

In re Application of :
Benjamin, et al. : DECISION ON PETITION
Application No. 10/686,124 :
Filed: October 14, 2003 :
For: RELATIONAL DATABASE METHOD :
FOR ACCESSING INFORMATION :
USEFUL FOR THE MANUFACTURE OF, :
TO INTERCONNECT NODES IN, TO :
REPAIR AND TO MAINTAIN PRODUCT :
AND SYSTEM UNITS :
:

COPY MAILED
AUG 25 2006
OFFICE OF PETITIONS

This is a decision on the petition under 37 C.F.R. § 1.137(b), filed February 2, 2006, to revive the above-identified application.

The petition is **GRANTED**.

This application became abandoned August 6, 2005 for failure to timely reply to the non-final Office action mailed May 5, 2005. The non-final Office action set a three (3) month shortened statutory period of time for reply. No petition for extension of time in accordance with 37 C.F.R. § 1.136 was timely submitted. Notice of Abandonment was mailed November 18, 2005.

A grantable petition pursuant to 37 C.F.R. § 1.137(b) must be accompanied by: (1) the required reply to the outstanding Office action or notice, unless previously filed; (2) the petition fee as set forth in 37 C.F.R. § 1.17(m); (3) a statement that the entire delay in filing the required reply from the due date for the reply until the filing of a grantable petition pursuant to 37 C.F.R. § 1.137(b) was unintentional; and (4) any terminal disclaimer (and fee set forth in 37 C.F.R. § 1.20(d)) required pursuant to 37 C.F.R. § 1.137(c).

The instant petition has been reviewed and found in compliance with the provisions of 37 C.F.R. § 1.137(b). Accordingly, the failure to timely submit a proper reply to the non-final Office action is accepted as having been unintentionally delayed.

The requested change of correspondence address/power of attorney has been entered into the record.

This application will be forwarded to Technology Center 2100 for further processing.

Telephone inquiries concerning this matter may be directed to the undersigned at (571) 272-3205.

Alesia M. Brown
Petitions Attorney
Office of Petitions

UNITED STATES PATENT AND TRADEMARK OFFICE

UNITED STATES DEPARTMENT OF COMMERCE
United States Patent and Trademark Office
Address: COMMISSIONER FOR PATENTS
P.O. Box 1450
Alexandria, Virginia 22313-1450
www.uspto.gov

APPLICATION NUMBER	FILING OR 371 (c) DATE	FIRST NAMED APPLICANT	ATTY. DOCKET NO./TITLE
10/686,124	10/14/2003	Scott Jon Benjamin	EA-00046D2

CONFIRMATION NO. 7619

OC000000020117781

Kevin W. Cyr
Lockheed Martin Corporation
MS U2F26
3333 Pilot Knob Road
Eagan, MN 55121-2034

Date Mailed: 08/21/2006

NOTICE REGARDING CHANGE OF POWER OF ATTORNEY

This is in response to the Power of Attorney filed 02/02/2006.

- The Power of Attorney to you in this application has been revoked by the assignee who has intervened as provided by 37 CFR 3.71. Future correspondence will be mailed to the new address of record(37 CFR 1.33).

ALESIA M BROWN
OP (571) 272-3205

FORMER ATTORNEY/AGENT COPY

UNITED STATES PATENT AND TRADEMARK OFFICE

UNITED STATES DEPARTMENT OF COMMERCE
United States Patent and Trademark Office
Address: COMMISSIONER FOR PATENTS
P.O. Box 1450
Alexandria, Virginia 22313-1450
www.uspto.gov

APPLICATION NUMBER	FILING OR 371 (c) DATE	FIRST NAMED APPLICANT	ATTY. DOCKET NO./TITLE
10/686,124	10/14/2003	Scott Jon Benjamin	EA-00046D2

CONFIRMATION NO. 7619

OC000000020117781

Kevin W. Cyr
Lockheed Martin Corporation
MS U2F26
3333 Pilot Knob Road
Eagan, MN 55121-2034

Date Mailed: 08/21/2006

NOTICE REGARDING CHANGE OF POWER OF ATTORNEY

This is in response to the Power of Attorney filed 02/02/2006.

- The Power of Attorney to you in this application has been revoked by the assignee who has intervened as provided by 37 CFR 3.71. Future correspondence will be mailed to the new address of record(37 CFR 1.33).

ALESIA M BROWN
OP (571) 272-3205

NEW ATTORNEY/AGENT COPY

UNITED STATES PATENT AND TRADEMARK OFFICE

UNITED STATES DEPARTMENT OF COMMERCE
United States Patent and Trademark Office
Address: COMMISSIONER FOR PATENTS
P.O. Box 1450
Alexandria, Virginia 22313-1450
www.uspto.gov

APPLICATION NUMBER	FILING OR 371 (c) DATE	FIRST NAMED APPLICANT	ATTY. DOCKET NO./TITLE
10/686,124	10/14/2003	Scott Jon Benjamin	EA-00046D2

CONFIRMATION NO. 7619

OC000000020117782

38356
BROOKS & CAMERON, PLLC
1221 NICOLLET MALL #500
MINNEAPOLIS, MN 55403

Date Mailed: 08/21/2006

NOTICE OF ACCEPTANCE OF POWER OF ATTORNEY

This is in response to the Power of Attorney filed 02/02/2006.

The Power of Attorney in this application is accepted. Correspondence in this application will be mailed to the above address as provided by 37 CFR 1.33.

ALESIA M BROWN
OP (571) 272-3205

ATTORNEY/APPLICANT COPY

UNITED STATES PATENT AND TRADEMARK OFFICE

UNITED STATES DEPARTMENT OF COMMERCE
United States Patent and Trademark Office
Address: COMMISSIONER FOR PATENTS
P.O. Box 1450
Alexandria, Virginia 22313-1450
www.uspto.gov

APPLICATION NUMBER	FILING OR 371 (c) DATE	FIRST NAMED APPLICANT	ATTY. DOCKET NO./TITLE
10/686,124	10/14/2003	Scott Jon Benjamin	EA-00046D2

CONFIRMATION NO. 7619

OC000000020117781

Kevin W. Cyr
Lockheed Martin Corporation
MS U2F26
3333 Pilot Knob Road
Eagan, MN 55121-2034

Date Mailed: 08/21/2006

NOTICE REGARDING CHANGE OF POWER OF ATTORNEY

This is in response to the Power of Attorney filed 02/02/2006.

- The Power of Attorney to you in this application has been revoked by the assignee who has intervened as provided by 37 CFR 3.71. Future correspondence will be mailed to the new address of record(37 CFR 1.33).

ALESIA M BROWN
OP (571) 272-3205

OFFICE COPY

UNITED STATES PATENT AND TRADEMARK OFFICE

UNITED STATES DEPARTMENT OF COMMERCE
United States Patent and Trademark Office
Address: COMMISSIONER FOR PATENTS
P.O. Box 1450
Alexandria, Virginia 22313-1450
www.uspto.gov

APPLICATION NUMBER	FILING OR 371 (c) DATE	FIRST NAMED APPLICANT	ATTY. DOCKET NO./TITLE
10/686,124	10/14/2003	Scott Jon Benjamin	EA-00046D2

CONFIRMATION NO. 7619

OC000000020117782

38356
BROOKS & CAMERON, PLLC
1221 NICOLLET MALL #500
MINNEAPOLIS, MN 55403

Date Mailed: 08/21/2006

NOTICE OF ACCEPTANCE OF POWER OF ATTORNEY

This is in response to the Power of Attorney filed 02/02/2006.

The Power of Attorney in this application is accepted. Correspondence in this application will be mailed to the above address as provided by 37 CFR 1.33.

ALESIA M BROWN
OP (571) 272-3205

OFFICE COPY

UNITED STATES PATENT AND TRADEMARK OFFICE

Commissioner for Patents
United States Patent and Trademark Office
P.O. Box 1450
Alexandria, VA 22313-1450
www.uspto.gov

MEYERTONS, HOOD, KIVLIN, KOWERT & GOETZEL, P.C.
P.O. BOX 398
AUSTIN, TX 78767-0398

MAILED

JUL 06 2010

OFFICE OF PETITIONS

In re Application of :
Scott Jon Benjamin et al. :
Application No. 10/686,124 :
Filed: October 14, 2003 :
Attorney Docket No. 6057-58302 :

DECISION ON APPLICATION
FOR PATENT TERM ADJUSTMENT

This is a decision in response to the "Application for Patent Term Adjustment Under 37 C.F.R. 1.705" filed February 1, 2010. Applicants request the initial determination of patent term adjustment be corrected from twenty (20) days to at least two hundred ninety-six (296) days.

The application for patent term adjustment is **dismissed**.

The Office issued a Determination of Patent Term Adjustment under 35 U.S.C. § 154(b) advising Applicants of a patent term adjustment to date of 20 days on October 30, 2009. Applicants timely filed this application for patent term adjustment with payment of the issue fee on February 1, 2010.

Applicants request the patent term adjustment be corrected to 296 days. Applicants argue the patent term adjustment should be increased 151 days under 37 C.F.R. § 1.702(b) and argue the Office improperly entered a reduction of 125 days under 37 C.F.R. § 1.704(c)(7).

The Request for an Increase to Patent Term Adjustment for Delay Under 37 C.F.R. § 1.702(b) is Premature.

To the extent applicants request reconsideration of the patent term adjustment as it relates to the Office's failure to issue the patent within 3 years of the filing date, the request is premature.

Knowledge of the actual date the patent issues is required to calculate the amount, if any, of additional patent term patentee is entitled to for Office failure to issue the patent within 3 years. See 37 C.F.R. § 1.702(b). (This is true even where a request for continued examination (RCE) was filed). The computer will not undertake the 37 C.F.R. § 1.702(b) calculation until the actual date of issuance of the patent has been determined. Likewise, the computer will not calculate any further Office delay under 37 C.F.R. § 1.702(a)(4) or applicant delay under 37 C.F.R.

§ 1.704(c)(10) until the actual date of issuance of the patent has been determined. As such, the Office can not make a determination on the correctness of the patent term adjustment until the patent has issued.

Requesting reconsideration of the patent term adjustment to be indicated on the patent under 37 C.F.R. § 1.705(b) based on the initial determination of patent term adjustment and a projected issuance date of the patent (or even the filing date of the request for continued examination) is premature. Rather than file an application for patent term adjustment under 37 C.F.R. § 1.705(b) contesting the 37 C.F.R. § 1.702(b) calculation at the time of the mailing of the notice of allowance, an applicant may wait until the time of the issuance of the patent and file a request for reconsideration of the patent term adjustment pursuant to 37 C.F.R. § 1.705(d).

As the USPTO does not calculate the amount of time earned pursuant to 37 C.F.R. § 1.702(b) until the time of the issuance of the patent, the Office will consider any request for reconsideration of the patent term adjustment due to an error in the calculation of 37 C.F.R. § 1.702(b) to be timely if the request for reconsideration is filed within two months of the issuance of the patent. However, as to all other bases for contesting the initial determination of patent term adjustment received with the notice of allowance, applicant must timely file an application for patent term adjustment prior to the payment of the issue fee.[1]

Any request for reconsideration of the patent term adjustment indicated on the patent must be timely filed within 2 months after issuance pursuant to 37 C.F.R. § 1.705(d) and must include payment of the required fee under 37 C.F.R. § 1.18(e).

The Office Properly Entered a 125-Day Reduction for Delay Under 37 C.F.R. § 1.704(c)(7).

Applicants object to the entry a 125-day reduction in patent term adjustment as a result of papers filed May 30, 2008, and September 3, 2008. The Office has reviewed the record and determined the 125-day reduction is warranted pursuant to 37 C.F.R. § 1.704(c)(7).

Background

Claim 46 was added by an amendment filed October 31, 2007. Claim 46 depends on Claim 45, which depends on independent Claim 1.

The Office mailed a non-final Office action on February 19, 2008. The Office action stated,

> Claims 1-11 and 45 are rejected under 35 U.S.C. 103(a) as being unpatentable over Knoblock et al. ... in view of Rivette....

[1] For example, if applicant disputes both the calculation of patent term adjustment under 37 C.F.R. § 1.702(a)(1) for Office failure to mail a first Office action or notice of allowance not later than fourteen months after the date on which the application was filed and under 37 C.F.R. § 1.702(b) for Office failure to issue a patent within three years of the actual filing date of the application, then applicant must still timely file an application for patent term adjustment prior to the payment of the issue fee to contest the calculation of Office delay in issuing a first Office action or notice of allowance. *See* 37 C.F.R. § 1.705(b) and 35 U.S.C. § 154(b)(3)(B). A dispute as to the calculation of the period of delay under 37 C.F.R. § 1.702(a)(1) raised on request for reconsideration of patent term adjustment under 37 C.F.R. § 1.705(d) will be dismissed as untimely filed.

> Claim 46 is rejected under 35 U.S.C. 103(a) as being unpatentable over Knoblock ... in view of Rivette ... and further in view of Chang.

A reply to the Office action was filed May 30, 2008. The reply amended Claim 1, and as a result, indirectly amended Claim 46. Although the remarks section of the reply did not specifically address Claim 46, the remarks section stated,

> Applicant asserts ... numerous ... dependent claims recite further distinctions over the cited art. However, since the rejection has been shown to be unsupported for the independent claims, a further discussion of the dependent claims is unnecessary at this time. Accordingly, Applicant respectfully requests withdrawal of the § 103(a) rejection.

The Office mailed a Notice of Non-Compliant Amendment on September 3, 2008. The Notice stated the reply was not fully responsive because the reply failed to respond to the ground of rejection for Claim 46.

A reply to the Notice of Non-Compliant Amendment was filed October 2, 2008. The only discussion of Claim 46 consisted of two paragraphs in the Remarks section of the reply. The Remarks section stated,

> The Notice of Non-Compliant Amendment indicates that the previously submitted response was not fully responsive regarding the ground of rejection for claim 46. Applicant respectfully submits that this claims is a dependent claim and that Applicant had addressed the corresponding independent claim in the previous response. However, [this reply] specifically indicate[s] the arguments of claim 1 apply to claim 46....
>
> Applicant submits that claim 46 is allowable since the corresponding independent claim (1) has been shown to be allowable over the prior art. Additionally, Applicant asserts numerous ... dependent claims recite further distinctions over the cited art. However, since the rejection has been shown to be unsupported for the independent claims, a further discussion of the dependent claims is unnecessary at this time.

Discussion

When calculating the patent term adjustment listed in the Notice of Allowance, the Office entered a 125-day reduction under 37 C.F.R. § 1.704(c)(7) for the time period from May 31, 2008, to October 2, 2008. Applicants argue the 125-day reduction is improper because the May 30, 2009 reply fully responded to the February 19, 2009 Office action. Applicants' arguments have been considered, but not found persuasive.

Pursuant to 37 C.F.R. § 1.704(c)(7), the following conduct will result in a reduction in patent term adjustment:

> Submission of a reply having an omission (§1.135(c)), in which case the period of adjustment set forth in § 1.703 shall be reduced by the number of days, if any, beginning

> on the day after the date the reply having an omission was filed and ending on the date that the reply or other paper correcting the omission was filed.

As shown by the parenthetical language in 37 C.F.R. § 1.704(c)(7), replies that can result in a reduction under 37 C.F.R. § 1.704(c)(7) include replies under 37 CFR 1.135(c).[2] In other words, a reply which is substantially complete and a bona fide attempt to advance the application to final action can warrant a reduction under 37 C.F.R. 1.704(c)(7).

The requirements that must be met in order for a reply to a non-final Office action to be fully responsive are set forth in 37 C.F.R. § 1.111(b) which states, with emphasis,

> In order to be entitled to reconsideration or further examination, the applicant or patent owner must reply to the Office action. The reply by the applicant or patent owner must be reduced to a writing which distinctly and specifically points out the supposed errors in the examiner's action and *must reply to every ground of objection and rejection* in the prior Office action. The reply must present arguments pointing out the specific distinctions believed to render the claims, including any newly presented claims, patentable over any applied references.... A general allegation that the claims define a patentable invention without specifically pointing out how the language of the claims patentably distinguishes them from the references does not comply with the requirements of this section.

The scope of 37 C.F.R. § 1.111(b) is not limited to independent claims. In other words, a reply must present arguments pointing out specific differences between each of the claims, including dependent claims, and the references applied by the examiner.

A discussion of a dependent claim is necessary when responding to a non-final Office action because, if the examiner continues to believe the corresponding independent claim is not

---

[2] *See also Changes to Implement Patent Term Adjustment Under Twenty-Year Patent Term*; Final Rule, 65 Fed. Reg. 56,366, 53,385 (September 18, 2000), 1239 Off. Gaz. Pat. Office 14 (October 3, 2000), which states,

> If a reply is filed that does not address each and every objection, rejection or other requirement made by the examiner, then the reply is not responsive to the Office action and the time between the filing of the incomplete reply and the date the omission was supplied is the period of time in which applicant's actions resulted in the Office not being able to complete processing or examination of the application.
>
> While Office practice is to treat a bona fide but non-responsive reply by issuing a notice setting a one-month (or thirty-day) period for reply and permitting applicants to obtain up to five additional months under § 1.136(a), the Office could have changed this practice (as part of implementing the patent term adjustment provisions of the American Inventors Protection Act of 1999) to set a one-month (or thirty-day) non-extendable period for supplying omissions in a reply. The Office elected to retain the relatively liberal practice for treating such non-responsive replies. To provide applicants with this extended period within which to supply an omission, however, the Office must provide that any patent term adjustment will be reduced by the period of time between the date the incomplete reply was filed and the date the omission was supplied. Since both the filing of a reply that is complete and the filing of any supplement necessary to a reply having an omission are within the control of the applicant, there is no need for a four-month upper limit.

patentable, the examiner will need to address the issue of whether or not the dependent claim contains separate patentable subject matter.

An examiner does not need to determine if a dependent claim contains separate patentable subject matter if a party explicitly concedes a dependent claim is not separately patentable from an independent claim. Therefore, *if* Applicants had stated the subject matter of Claim 46 was only patentable if Claim 1 was patentable, a separate discussion of Claim 46 might well have been unnecessary. However, Applicants' reply did *not* include such a statement. Instead, Applicants' reply appears to assert numerous dependent claims are separately patentable from the independent claims. Specifically, the reply stated, "Applicant asserts ... numerous ... dependent claims recite further distinctions over the cited art."

The May 30, 2008 reply does not specifically point out how the subject matter of Claim 46 is not obvious in view of the three references cited by the examiner. For example, the reply does not mention the Chang reference cited by the examiner when rejecting Claim 46. Therefore, the May 30, 2008 reply fails to satisfy the requirements set forth in 37 C.F.R. § 1.111 and the reduction under 37 C.F.R. § 1.704(c)(7) was proper.

Conclusion

The request for an increase in patent term adjustment under 37 C.F.R. § 1.702(b) is premature. Applicants have failed to establish the 125-day reduction in patent term adjustment entered pursuant to 37 C.F.R. § 1.704(c)(7) was improper.

In view of the prior discussion, the patent term adjustment as of the date the Office issued the Notice of Allowance remains 20 days.

Submission of the $200.00 fee set forth in 37 C.F.R. § 1.18(e) is acknowledged. No additional fee is required.

Applicants are reminded any Office delays pursuant to 37 C.F.R. §§ 1.702(a)(4) and 1.702(b) and any applicant delays under 37 C.F.R. § 1.704(c)(10) will be calculated at the time the patent issues. The Issue Notification letter mailed approximately three weeks prior to issuance of the patent will inform Applicants of any revised patent term adjustment to be indicated on the patent.

The Office of Data Management has been advised of this decision. This matter is being referred to the Office of Data Management for issuance of the patent.

Telephone inquiries specific to this decision should be directed to Senior Petitions Attorney Steven Brantley at (571) 272-3203.

Anthony Knight
Director
Office of Petitions

UNITED STATES PATENT AND TRADEMARK OFFICE

Commissioner for Patents
United States Patent and Trademark Office
P.O. Box 1450
Alexandria, VA 22313-1450
www.uspto.gov

CHARLES C. VALAUSKAS
BANIAK PINE & GANNON
150 N. WACKER DRIVE, SUITE 1200
CHICAGO IL 60606

MAILED

MAY 24 2010

OFFICE OF PETITIONS

In re Application of :
Said et al. :
Application No. 10/686,127 :
Filed: October 15, 2003 :
Attorney Docket No. 7450/9 :

DECISION ON PETITION
TO WITHDRAW
FROM RECORD

This is a decision on the Request to Withdraw as attorney or agent of record under 37 C.F.R. § 1.36(b), filed February 17, 2010.

The request is **APPROVED**.

A grantable request to withdraw as attorney/agent of record must be signed by every attorney/agent seeking to withdraw or contain a clear indication that one attorney is signing on behalf of another/others. The Office will require the practitioner(s) to certify that he, she or they have: (1) given reasonable notice to the client, prior to the expiration of the reply period, which the practitioner(s) intends to withdraw from employment; (2) delivered to the client or a duly authorized representative of the client all papers and property (including funds) to which the client is entitled; and (3) notified the client of any replies that may be due and the time frame within which the client must respond, pursuant to 37 CFR 10.40 (c).

The request was signed by Charles C. Valauskas on behalf of all attorneys/agents of record. All attorneys/agents have been withdrawn. Applicants are reminded that there is no attorney of record at this time.

All future correspondence will be directed to the first-named inventor, Joe P. Said, at the address indicated below.

Telephone inquires concerning this decision should be directed to the undersigned at (571) 272-3206. All other inquires concerning either the examination or status of the application should be directed to the Technology Center.

Liana Walsh
Petitions Examiner
Office of Petitions

cc: JOE P. SAID
GH, LLC
1305 CUMBERLAND AVENUE
WEST LAFAYETTE, IN 47906

UNITED STATES PATENT AND TRADEMARK OFFICE

COMMISSIONER FOR PATENTS
UNITED STATES PATENT AND TRADEMARK OFFICE
P.O. BOX 1450
ALEXANDRIA, VA 22313-1450
www.uspto.gov

Paper No.

Tarek N. Fahmi
BLAKELY, SOKOLOFF, TAYLOR & ZAFMAN
12400 Wilshire Boulevard
Seventh Floor
Los Angeles, CA 90025

In re Application of:
Mark Anderson
Application No. 10/686,135
Filed: October 14, 2003
For: METHOD AND SYSTEM TO COLLECT GEOGRAPHIC LOCATION INFORMATION FOR A NETWORK ADDRESS UTILIZING GEOGRAPHICALLY DISPERSED DATA COLLECTION AGENTS

DECISION ON REQUEST TO WITHDRAW AS ATTORNEY OR AGENT

This is a decision on the Request To Withdraw from Representation filed October 12, 2004.

A grantable request to withdraw as attorney of record should indicate thereon the present mailing addresses of the attorney(s) who is/are withdrawing from the record and of the applicant. The request for withdrawal must be signed by every attorney seeking to withdraw or contain a clear indication that one attorney is signing on behalf of another/others. A request to withdraw will not be approved unless at least 30 (thirty) days would remain between the date of approval and the later of the expiration date of a time to file a response or the expiration date of the maximum time period which can be extended under 37 C.F.R. § 1. 136(a). The effective date of withdrawal being the date of decision and not the date of request. See M.P.E.P. § 402.06. 37 C.F.R. § 1.36 further requires that the applicant or patent owner be notified of the withdrawal of the attorney or agent.

The request filed October 12, 2004 meets all the requirements. Accordingly the request is **GRANTED**.

All future communications from the Office will be directed to the below-listed address until otherwise notified by applicant. This correspondence address is provided by the withdrawn attorney(s). Applicant is reminded of the obligation to promptly notify the Patent and Trademark Office (Office) of any change in correspondence address to ensure receipt of all communications from the Office.

James R. Matthews

for Vincent N. Trans
Special Program Examiner
Technology Center 2100
Computer Architecture, Software, and
Information Security
(571) 272-3613

cc: Andre L. Marais
SCHWEGMAN, LUNDBERG, WOESSNER & KLUTH, P.A.
1600 TCT Tower
121 South Eight Street
Minneapolis, MN 55402

UNITED STATES PATENT AND TRADEMARK OFFICE

Commissioner for Patents
United States Patent and Trademark Office
P.O. Box 1450
Alexandria, VA 22313-1450
www.uspto.gov

SCHWEGMAN, LUNDBERG & WOESSNER, P.A.
P.O. BOX 2938
MINNEAPOLIS, MN 55402

COPY MAILED
FEB 18 2010

In re Application of :
Mark ANDERSON, *et al.* :
Application No. 10/686,135 : DECISION ON PETITION
Filed: October 14, 2003 : UNDER 37 CFR 1.313(c)(1)
Attorney Docket No. **2054.001US4** :

This is a decision on the petition under 37 CFR 1.313(c), filed January 29, 2010, to withdraw the above-identified application from issue after payment of the issue fee.

The petition is **DISMISSED**.

37 CFR 1.313(c) provides that:

> Once the issue fee has been paid, the application will not be withdrawn from issue upon petition by the applicant for any reason except:
>
> (1) Unpatentability of one of more claims, which petition must be accompanied by an unequivocal statement that one or more claims are unpatentable, an amendment to such claim or claims, and an explanation as to how the amendment causes such claim or claims to be patentable;
>
> (2) Consideration of a request for continued examination in compliance with 37 CFR 1.114; or
>
> (3) Express abandonment of the application. Such express abandonment may be in favor of a continuing application.

Upon payment of the issue fee, an application will not be withdrawn from issue upon petition except for the reasons enumerated in 37 CFR 1.313(c). The circumstances of the above-identified application do not fall within any of those exceptions. The submission required under 37 CFR 1.114 was omitted.

For the reason stated above, the petition under 37 CFR 1.313(c) cannot be granted.

Petitioner is reminded that the filing of any renewed petition to withdraw from issue may not be recognized or effective if not received by the appropriate deciding official in time to act prior to issuance. *Note* 37 CFR 1.313(d). It is recommended that the facsimile number listed below be used to file the renewed petition.

Further correspondence with respect to this matter should be addressed as follows:

By mail: Mail Stop PETITIONS
Commissioner for Patents
Post Office Box 1450
Alexandria, VA 22313-1450

By hand: Customer Service Window
Mail Stop Petitions
Randolph Building
401 Dulany Street
Alexandria, VA 22314

By fax: **(571) 273-0025**
Office of Petitions

Any questions concerning this matter may be directed to the undersigned at (571) 272-7253.

/Monica A. Graves/
Petitions Examiner, Office of Petitions

UNITED STATES PATENT AND TRADEMARK OFFICE

Commissioner for Patents
United States Patent and Trademark Office
P.O. Box 1450
Alexandria, VA 22313-1450
www.uspto.gov

SCHWEGMAN, LUNDBERG & WOESSNER, P.A.
P.O. BOX 2938
MINNEAPOLIS, MN 55402

COPY MAILED
FEB 26 2010

In re Application of :
Mark Anderson, et *al.* :
Application No. 10/686,135 : DECISION GRANTING PETITION
Filed: October 14, 2003 : UNDER 37 CFR 1.313(c)(2)
Attorney Docket No. **2054.001US4** :

CORRECTED DECISION

This is a decision on the petition under 37 CFR 1.313(c)(2), filed January 29, 2010, to withdraw the above-identified application from issue after payment of the issue fee.

The petition is **GRANTED**.

The above-identified application is withdrawn from issue for consideration of a submission under 37 CFR 1.114 (request for continued examination). *See* 37 CFR 1.313(c)(2).

Petitioner is advised that the issue fee paid on October 13, 2009 cannot be refunded. If, however, this application is again allowed, petitioner may request that it be applied towards the issue fee required by the new Notice of Allowance.[1]

Telephone inquiries should be directed to the undersigned at (571) 272-7253.

This application is being referred to Technology Center AU 2451 for processing of the request for continued examination under 37 CFR 1.114 and for consideration of the concurrently filed Petition under 37 CFR 1.84(a) to Accept Color Drawings.

/Monica A. Graves/
Petitions Examiner, Office of Petitions

[1] *The request to apply the issue fee to the new Notice may be satisfied by completing and returning the new Part B – Fee(s) Transmittal Form (along with any balance due at the time of submission). Petitioner is advised that the Issue Fee Transmittal Form* ***must*** *be completed and timely submitted to avoid abandonment of the application.*

UNITED STATES PATENT AND TRADEMARK OFFICE

UNITED STATES DEPARTMENT OF COMMERCE
United States Patent and Trademark Office
Address: COMMISSIONER FOR PATENTS
P.O. Box 1450
Alexandria, Virginia 22313-1450
www.uspto.gov

APPLICATION NO.	FILING DATE	FIRST NAMED INVENTOR	ATTORNEY DOCKET NO.	CONFIRMATION NO.
10/686,135	10/14/2003	Mark Anderson	2054.001US4	7593

21186 7590 03/09/2010

SCHWEGMAN, LUNDBERG & WOESSNER, P.A.
P.O. BOX 2938
MINNEAPOLIS, MN 55402

EXAMINER	
DINH, KHANH Q	

ART UNIT	PAPER NUMBER
2451	

NOTIFICATION DATE	DELIVERY MODE
03/09/2010	ELECTRONIC

Please find below and/or attached an Office communication concerning this application or proceeding.

The time period for reply, if any, is set in the attached communication.

Notice of the Office communication was sent electronically on above-indicated "Notification Date" to the following e-mail address(es):

uspto@slwip.com
request@slwip.com

UNITED STATES PATENT AND TRADEMARK OFFICE

COMMISSIONER FOR PATENTS
UNITED STATES PATENT AND TRADEMARK OFFICE
WASHINGTON, D.C. 20231
www.uspto.gov

MAILED

MAR 08 2010

DIRECTOR OFFICE
TECHNOLOGY CENTER 2400

James H. Salter
SCHWEGMAN, LUNDBERG & WOESSNER, P.A.
P.O. BOX 2938
MINNEAPOLIS MN 55402

In re Application of:
ANDERSON, Mark et al.
Application No. 10/686135
Attorney Docket No. 2054.001US4
Filed: October 14, 2003
For: METHOD AND SYSTEM TO COLLECT GEOGRAPHIC LOCATION INFORMATION FOR A NETWORK ADDRESS UTILIZING GEOGRAPHICALLY DISPERSED DATA COLLECTION AGENTS

DECISION ON PETITION UNDER 37 C.F.R. ∋ 1.84(a)(2) TO ACCEPT COLOR DRAWINGS

This is a decision on the petition under 37 C.F.R. 1.84(a)(2), filed January 29, 2010, requesting acceptance of color drawings

The petition is **DISMISSED**.

REGULATIONS AND PRACTICE

37 C.F.R. § 1.84(a)(2) states:

(2) *Color.* On rare occasions, color drawings may be necessary as the only practical medium by which to disclose the subject matter sought to be patented in a utility or design patent application or the subject matter of a statutory invention registration. The color drawings must be of sufficient quality such that all details in the drawings are reproducible in black and white in the printed patent. Color drawings are not permitted in international applications (see PCT Rule 11.13), or in an application, or copy thereof, submitted under the Office electronic filing system. The Office will accept color drawings in utility or design patent applications and statutory invention registrations only after granting a petition filed under this paragraph explaining why the color drawings are necessary. Any such petition must include the following:

(i) The fee set forth in § 1.17(h);
(ii) Three (3) sets of color drawings;

(iii) An amendment to the specification to insert (unless the specification contains or has been previously amended to contain) the following language as the first paragraph of the brief description of the drawings:

> The patent or application file contains at least one drawing executed in color. Copies of this patent or patent application publication with color drawing(s) will be provided by the Office upon request and payment of the necessary fee.

DECISION

The petition, filed January 29, 2010 satisfies conditions (i) and (ii) above; however, condition (iii) is not satisfied. There is no statement or amendment to the specification (in the first paragraph of the brief description of the drawings) to specify that the application file contains at least one drawing executed in color. *See* 37 C.F.R. § 1.84(a)(2)(iii).

For the above reasons, the petition is **DISMISSED**.

The color drawings filed January 29, 2010 are not accepted at this time.

Any inquiry regarding this decision should be directed the undersigned whose telephone number is (571) 272-4147.

/Kim Huynh/

Kim Huynh, WQAS
Technology Center 2400
Network, Multiplexing, Cable and Security

UNITED STATES PATENT AND TRADEMARK OFFICE

UNITED STATES DEPARTMENT OF COMMERCE
United States Patent and Trademark Office
Address: COMMISSIONER FOR PATENTS
P.O. Box 1450
Alexandria, Virginia 22313-1450
www.uspto.gov

APPLICATION NO.	FILING DATE	FIRST NAMED INVENTOR	ATTORNEY DOCKET NO.	CONFIRMATION NO.
10/686,135	10/14/2003	Mark Anderson	2054.001US4	7593

21186 7590 04/23/2010

SCHWEGMAN, LUNDBERG & WOESSNER, P.A.
P.O. BOX 2938
MINNEAPOLIS, MN 55402

EXAMINER	
DINH, KHANH Q	

ART UNIT	PAPER NUMBER
2451	

NOTIFICATION DATE	DELIVERY MODE
04/23/2010	ELECTRONIC

Please find below and/or attached an Office communication concerning this application or proceeding.

The time period for reply, if any, is set in the attached communication.

Notice of the Office communication was sent electronically on above-indicated "Notification Date" to the following e-mail address(es):

uspto@slwip.com
request@slwip.com

UNITED STATES PATENT AND TRADEMARK OFFICE

COMMISSIONER FOR PATENTS
UNITED STATES PATENT AND TRADEMARK OFFICE
WASHINGTON, D.C. 20231
www.uspto.gov

MAILED

APR 22 2010

DIRECTOR OFFICE
TECHNOLOGY CENTER 2400

James H. Salter
SCHWEGMAN, LUNDBERG & WOESSNER, P.A.
P.O. BOX 2938
MINNEAPOLIS MN 55402

In re Application of:
ANDERSON, Mark et al.
Application No. 10/686135
Attorney Docket No. 2054.001US4
Filed: October 14, 2003
For: METHOD AND SYSTEM TO COLLECT GEOGRAPHIC LOCATION INFORMATION FOR A NETWORK ADDRESS UTILIZING GEOGRAPHICALLY DISPERSED DATA COLLECTION AGENTS

DECISION ON PETITION UNDER 37 C.F.R. ∋ 1.84(a)(2) TO ACCEPT COLOR DRAWINGS

This is a decision on the petition under 37 C.F.R. 1.84(a)(2), filed March 17, 2010, requesting acceptance of color drawings

The petition is **GRANTED**.

REGULATIONS AND PRACTICE

37 C.F.R. § 1.84(a)(2) states:

(2) *Color.* On rare occasions, color drawings may be necessary as the only practical medium by which to disclose the subject matter sought to be patented in a utility or design patent application or the subject matter of a statutory invention registration. The color drawings must be of sufficient quality such that all details in the drawings are reproducible in black and white in the printed patent. Color drawings are not permitted in international applications (see PCT Rule 11.13), or in an application, or copy thereof, submitted under the Office electronic filing system. The Office will accept color drawings in utility or design patent applications and statutory invention registrations only after granting a petition filed under this paragraph explaining why the color drawings are necessary. Any such petition must include the following:

(i) The fee set forth in § 1.17(h);

(ii) Three (3) sets of color drawings;

(iii) An amendment to the specification to insert (unless the specification contains or has been previously amended to contain) the following language as the first paragraph of the brief description of the drawings:

> The patent or application file contains at least one drawing executed in color. Copies of this patent or patent application publication with color drawing(s) will be provided by the Office upon request and payment of the necessary fee.

DECISION

The petition, filed March 17, 2010 satisfies conditions (i) - (iii) above; therefore, the petition is **GRANTED**.

The application file is being forwarded to the Examiner of record.

Any inquiry regarding this decision should be directed the undersigned whose telephone number is (571) 272-4147.

/Kim Huynh/

Kim Huynh, WQAS
Technology Center 2400
Network, Multiplexing, Cable and Security

UNITED STATES PATENT AND TRADEMARK OFFICE

COMMISSIONER FOR PATENTS
UNITED STATES PATENT AND TRADEMARK OFFICE
P.O. BOX 1450
ALEXANDRIA, VA 22313-1450
www.uspto.gov

MAILED

NOV 02 2004

DIRECTOR'S OFFICE
TECHNOLOGY CENTER 3600

IP Department of Piper Rudnick LLP
One Liberty Place, Suite 4900
1650 Market St
Philadelphia, PA 19103

In re application of : **DECISION ON PETITION**
Stephen Punzak et al. : **TO MAKE SPECIAL**
Application No. 10/686,172 : **(ACCELERATED**
Filed: October 15, 2003 : **EXAMINATION)**
For: METHOD AND APPARATUS FOR SHARING : HEALTHCARE DATA

This is in response to the petition filed on October 15, 2003 to make the above-identified application special on the basis of special examining procedure for certain new applications - accelerated examination as set forth in MPEP § 708.02 VIII.

The requirements for granting special status under this section are: (A) a petition to make special accompanied by the fee set forth in 37 CFR 1.17(i); (B) all claims being directed to a single invention, or an election without traverse if the Office determines that all the claims are not directed to a single invention; (C) a statement that a pre-examination search was made listing the field of search; (D) one copy of each of the references deemed most closely related to the subject matter encompassed by the claims if said references are not already of record; and (E) a detailed discussion of how the claimed subject matter is patentable over the references in accordance with 37 CFR 1.111 (b) and (c).

Since all of the requirements for special status under MPEP § 708.02 VIII have been met, the petition is **GRANTED**.

The examiner is directed (1) to make an interference search for possible interfering applications, (2) to promptly examine this application out of turn, and (3) if any interfering application is discovered, to examine such application simultaneously and state in the first official letter of such application that it is being taken out of turn because of a possible interference.

Petitioner is advised that this application will continue to be special, throughout its entire prosecution and pendency, including interference or appeal, if any, only if petitioner makes a prompt ***bona fide*** effort, in response to each Office action, to place the application in condition for allowance, even if it is necessary to conduct an interview with the examiner to accomplish this purpose.

SUMMARY: Petition to Make Special **GRANTED**.

Steven N. Meyers
Special Programs Examiner
Technology Center 3600
(703) 308-3868

SNM/vdb: 6/17/04

UNITED STATES PATENT AND TRADEMARK OFFICE

COMMISSIONER FOR PATENTS
UNITED STATES PATENT AND TRADEMARK OFFICE
P.O. BOX 1450
ALEXANDRIA, VA 22313-1450
www.uspto.gov

IP Department Of Piper Rudnick LLP
One Liberty Place, Suite 4900
1650 Market St.
Philadelphia, PA 19103

MAILED

NOV 02 2004

DIRECTOR'S OFFICE
TECHNOLOGY CENTER 3600

In re application of : **DECISION ON PETITION**
Stephen Punzak, et al. : **TO MAKE SPECIAL**
Application No. 10/686,172 : **(ACCELERATED**
Filed: October 15, 2003 : **EXAMINATION)**
For: METHOD AND APPARATUS FOR SHARING HEALTHCARE DATA

This is in response to the petition filed on October 15, 2003 to make the above-identified application special on the basis of special examining procedure for certain new applications - accelerated examination as set forth in MPEP § 708.02, VIII.

The requirements for granting special status under this section are: (A) a petition to make special accompanied by the fee set forth in 37 CFR 1.17(h); (B) all claims being directed to a single invention, or an election without traverse if the Office determines that all the claims are not directed to a single invention; (C) a statement that a pre-examination search was made listing the field of search; (D) one copy of each of the references deemed most closely related to the subject matter encompassed by the claims if said references are not already of record; and (E) a detailed discussion of how the claimed subject matter is patentable over the references in accordance with 37 CFR 1.111 (b) and (c).

Since all of the requirements for special status under MPEP § 708.02, VIII have been met, the petition is **GRANTED**.

In satisfaction of item (B) above, the petitioner states that "(i)n the event restriction is required, an election will be made without traverse."

The examiner is directed (1) to make an interference search for possible interfering applications, (2) to promptly examine this application out of turn, and (3) if any interfering application is discovered, to examine such application simultaneously and state in the first official letter of such application that it is being taken out of turn because of a possible interference.

Petitioner is advised that this application will continue to be special, throughout its entire prosecution and pendency, including interference or appeal, if any, only if petitioner makes a prompt ***bona fide*** effort, in response to each Office action, to place the application in condition for allowance, even if it is necessary to conduct an interview with the examiner to accomplish this purpose.

SUMMARY: Petition to Make Special **GRANTED.**

Steven N. Meyers
Special Programs Examiner
Technology Center 3600
(703) 308-3868

SNM/rwg: 10/27/04

SPE RESPONSE FOR CERTIFICATE OF CORRECTION

DATE : 10/31/06 Paper No.: _____

TO SPE OF : ART UNIT 3651

SUBJECT : Request for Certificate of Correction for Appl. No.: 10/686190 Patent No.: 6874614

Please respond to this request for a certificate of correction within 7 days.

Please review the requested changes/corrections as shown in the **COCIN** document(s) in the IFW application image. No new matter should be introduced, nor should the scope or meaning of the claims be changed.

Please complete the response (see below) and forward the completed response to scanning using document code **COCX**.

HENRY RANDALL
Certificates of Correction Branch
703-308-9390 ext.

Thank You For Your Assistance

The request for issuing the above-identified correction(s) is hereby:
Note your decision on the appropriate box.

- ☒ **Approved** — All changes apply.
- ☐ **Approved in Part** — Specify below which changes **do not** apply.
- ☐ **Denied** — State the reasons for denial below.

Comments: Approved for entering
Khi Le Tran

_____ 3651
SPE Art Unit

PTO/SB44 (04-05)
Approved for use through 04/30/2007. OMB 0651-0033
U.S. Patent and Trademark Office; U.S. DEPARTMENT OF COMMERCE
Under the Paperwork Reduction Act of 1995, no persons are required to respond to a collection of information unless it displays a valid OMB control number.
(Also Form PTO-1050)

UNITED STATES PATENT AND TRADEMARK OFFICE
CERTIFICATE OF CORRECTION

PATENT NO. : US 6,874,616 B2
APPLICATION NO. : 10/686,190
ISSUE DATE : April 5, 2005
INVENTOR(S) : Brett Edwin DeVries et al.

It is certified that an error appears or errors appear in the above-identified patent and that said Letters Patent is hereby corrected as shown below:

In the Drawings, on Sheet 8, the image of Figure 13 should appears as follows:

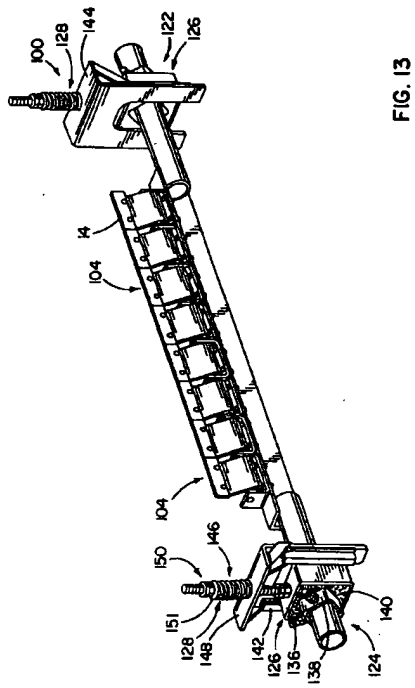

FIG. 13

MAILING ADDRESS OF SENDER (Please do not use customer number below):

Stephen S. Favakeh, Esq.
Fitch, Even, Tabin & Flannery
120 South LaSalle Street, Suite 1600
Chicago, Illinois 60603-3406

PTO/SB44 (04-05)
Approved for use through 04/30/2007. OMB 0651-0033
U.S. Patent and Trademark Office; U.S. DEPARTMENT OF COMMERCE
Under the Paperwork Reduction Act of 1995, no persons are required to respond to a collection of information unless it displays a valid OMB control number.
(Also Form PTO-1050)

UNITED STATES PATENT AND TRADEMARK OFFICE
CERTIFICATE OF CORRECTION

PATENT NO. : US 6,874,616 B2
APPLICATION NO. : 10/686,190
ISSUE DATE : April 5, 2005
INVENTOR(S) : Brett Edwin DeVries et al.

It is certified that an error appears or errors appear in the above-identified patent and that said Letters Patent is hereby corrected as shown below:

In the Drawings, on Sheet 11, the image of Figure 16 should appears as follows:

FIG. 16

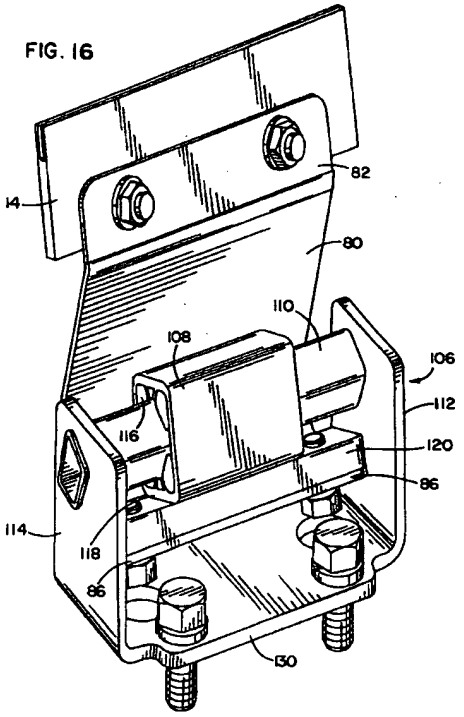

MAILING ADDRESS OF SENDER (Please do not use customer number below):

Stephen S. Favakeh, Esq.
Fitch, Even, Tabin & Flannery
120 South LaSalle Street, Suite 1600
Chicago, Illinois 60603-3406

PTO/SB44 (04-05)
Approved for use through 04/30/2007. OMB 0651-0033
U.S. Patent and Trademark Office; U.S. DEPARTMENT OF COMMERCE
Under the Paperwork Reduction Act of 1995, no persons are required to respond to a collection of information unless it displays a valid OMB control number.
(Also Form PTO-1050)

UNITED STATES PATENT AND TRADEMARK OFFICE
CERTIFICATE OF CORRECTION

PATENT NO. : US 6,874,616 B2
APPLICATION NO. : 10/686,190
ISSUE DATE : April 5, 2005
INVENTOR(S) : Brett Edwin DeVries et al.

It is certified that an error appears or errors appear in the above-identified patent and that said Letters Patent is hereby corrected as shown below:

MAILING ADDRESS OF SENDER (Please do not use customer number below):

Stephen S. Favakeh, Esq.
Fitch, Even, Tabin & Flannery
120 South LaSalle Street, Suite 1600
Chicago, Illinois 60603-3406

IN THE UNITED STATES PATENT AND TRADEMARK OFFICE

Patent No.:	US 6,874,616 B2
Issued:	April 5, 2005
Patentees:	
Inventors:	Brett Edwin DeVRIES John H. WINKELMAN Mark L. WADE
Assignee:	Flexible Steel Lacing Company
For:	CONVEYOR BELT CLEANING SYSTEM
Application No.:	10/686,190
Filed:	October 15, 2003
Attorney Docket:	6182/79606
Customer No.:	22242

Confirmation No. 3801

This Certificate of Correction was electronically filed using the USPTO's EFS-Web.

REQUEST FOR CERTIFICATE OF CORRECTION OF PATENT FOR PTO MISTAKE (37 C.F.R. § 1.322(a))

Commissioner for Patents
P. O. Box 1450
Alexandria, Virginia 22313-1450

ATTENTION: Certificate of Correction Branch

Sir:

In accordance with 37 C.F.R. § 1.322(a), the above-specified Patentees, through their attorneys, respectfully request that a Certificate of Correction be issued for the above-referenced patent to correct the following errors.

IN THE DRAWINGS:

On Sheet 8, the image of FIG. 13 should appear as follows:

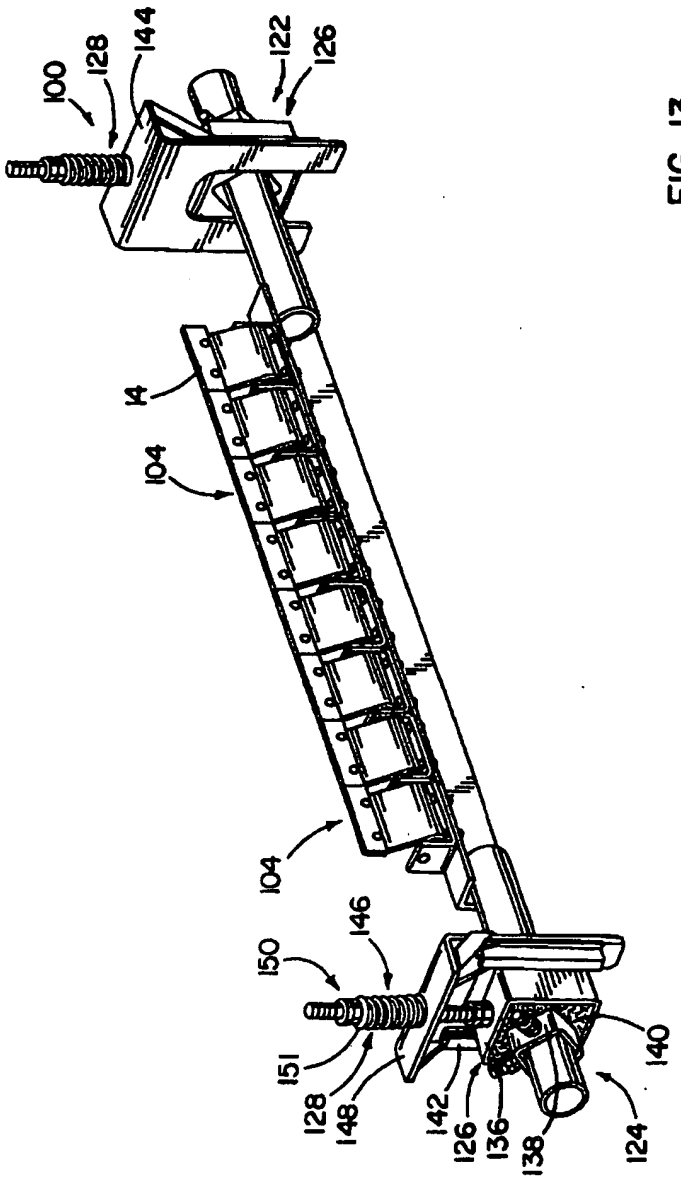

FIG. 13

On Sheet 11, the image of FIG. 16 should appear as follows:

FIG. 16

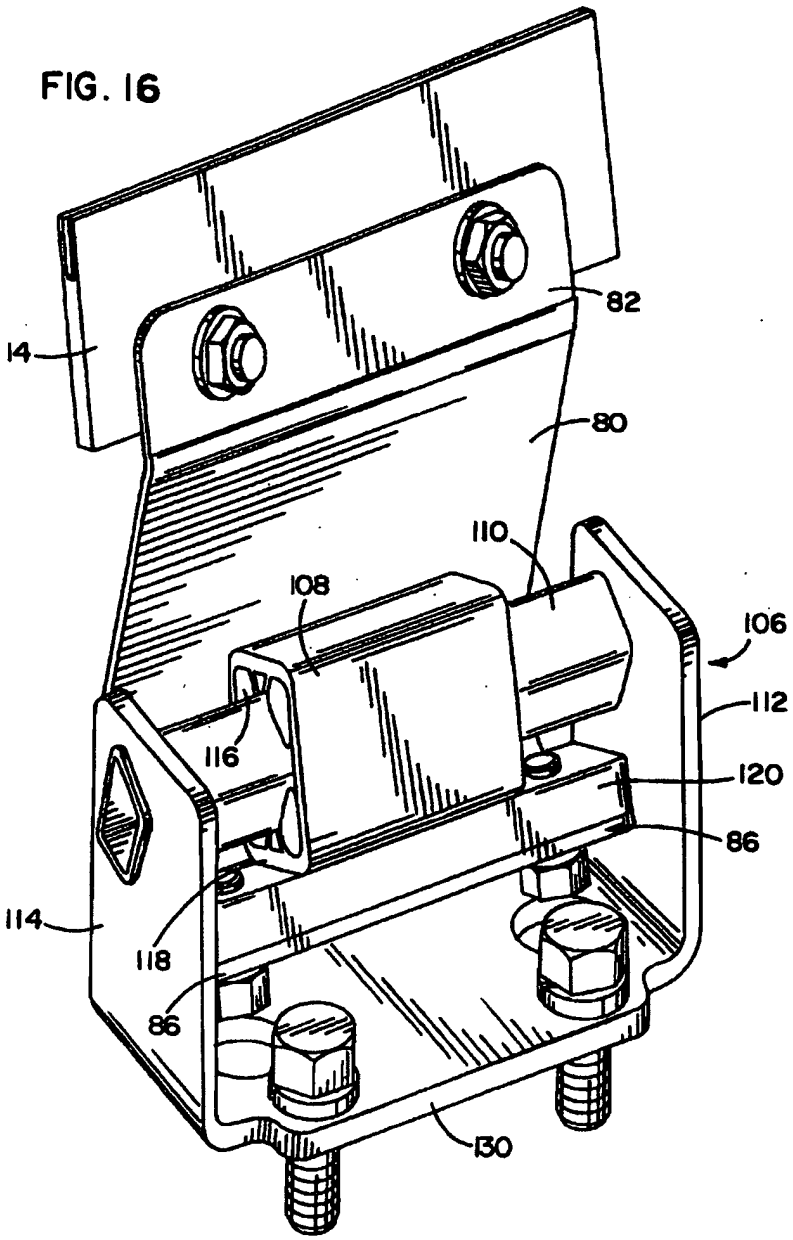

REMARKS

The above-requested changes result from errors on the part of the Patent Office. Attached hereto is Form PTO/SB/44 incorporating the requested changes.

In accordance with procedures set forth in Section 1480.01 of the Manual of Patent Examining Procedure "Expedited Issuance of Certificates of Correction – Error Attributable to Office", Patentees submits herewith a copy of the transmission of formal drawings dated October 28, 2004, a copy of the return receipt postcard stamped by the Patent Office as being received on November 1, 2004, the Supplemental Notice of Allowability dated February 23, 2005, and copies of the Transaction History and Image File Wrapper as supporting documentation so that this request can be processed without the patent file.

On October 28, 2004, the Applicants filed twelve (12) sheets of formal drawings to correct errors in drawing Sheets 8 and 11. Attached to this Request is a copy of the Transmittal of Formal Drawings. As shown in the attached copies of the Transaction History and Image File Wrapper, these drawings were entered into the file on November 1, 2004. The Supplemental Notice of Allowance dated February 23, 2005 also indicates the drawings filed in November of 2004 were accepted by the Examiner.

The Patentees believe that the correct formal drawings filed on October 28, 2004 were mistakenly not included in the publication of the issued patent. Since the corrected drawings filed on October 28, 2004 only corrected Figures 13 and 16 (Sheets 8 and 11), only these sheets need correction in the Certificate of Correction.

It is believed that issuance of a Certificate of Correction is appropriate without expense to the Patentees, and issuance of such Certificate is respectfully requested.

Please send the Certificate to:

Stephen S. Favakeh, Esq.
FITCH, EVEN, TABIN & FLANNERY
120 South LaSalle Street, Suite 1600
Chicago, Illinois 60603-3406

The Commissioner is hereby authorized to charge any additional fees which may be required in respect to this communication to Deposit Account No. 06-1135.

Respectfully submitted,

FITCH, EVEN, TABIN & FLANNERY

Dated: August 21, 2006

Stephen S. Favakeh
Registration No. 36,798

120 South LaSalle Street, Suite 1600
Chicago, Illinois 60603-3406
Telephone 312.577.7000
Facsimile 312.577.7007
457500

IN THE UNITED STATES PATENT AND TRADEMARK OFFICE

Appln No.:	10/686,190
Filed:	October 15, 2003
Applicants:	Brett Edwin DeVries et al.
Title:	Conveyor Belt Cleaning System
Art Unit:	3651
Examiner:	Khoi H. Tran

Confirmation No. 3801

CERTIFICATE OF MAILING

I hereby certify that this paper (along with any paper referred to as being attached or enclosed) is being deposited with the United States Postal Service with sufficient postage as first class mail in an envelope addressed to the Commissioner for Patents, P.O. Box 1450, Alexandria, VA 22313-1450, on this date.

10/28/04 — Date

Stephen S. Favakeh
Registration No. 36,798
Attorney for Applicant(s)

Date of Notice of Allowance, PTOL-85: **August 26, 2004**

Attorney Docket No.:	79606
Customer No.:	22242

DOCKETED
NOV 0 3 2004
BY: D Gr

TRANSMITTAL OF FORMAL DRAWINGS

Mail Stop Issue Fee
Commissioner for Patents
P.O. Box 1450
Alexandria, VA 22313-1450

Submitted herewith for filing in this application are twelve (12) sheets of formal drawings to replace the previously submitted drawings on file.

Respectfully submitted,

By: _____
Stephen S. Favakeh
Registration No. 36,798

Date: October 28, 2004

FITCH, EVEN, TABIN & FLANNERY
120 South LaSalle, Suite 1600
Chicago, Illinois 60603-3406
Telephone: 312/577-7000
Facsimile: 312/577-7007

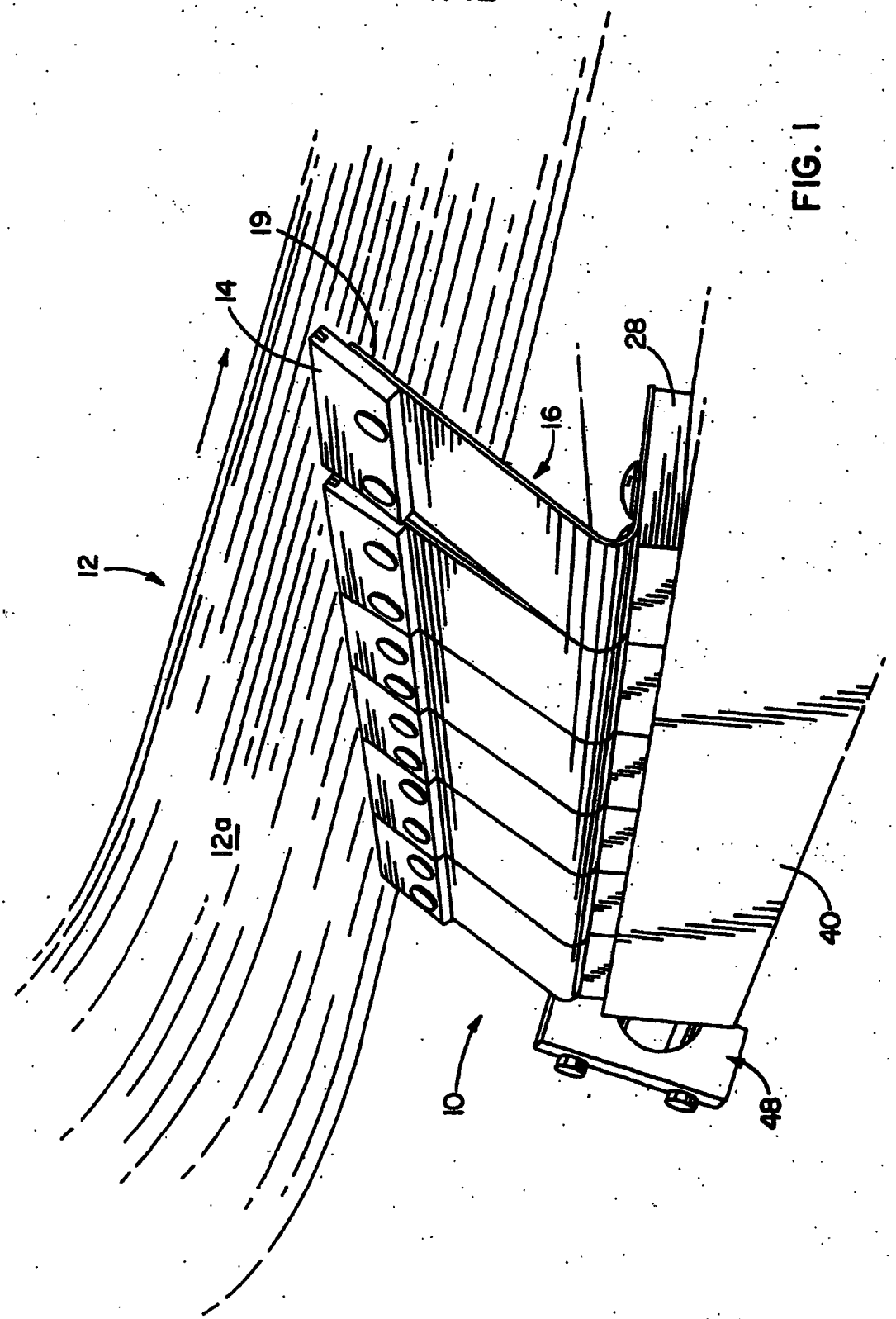

FIG. 1

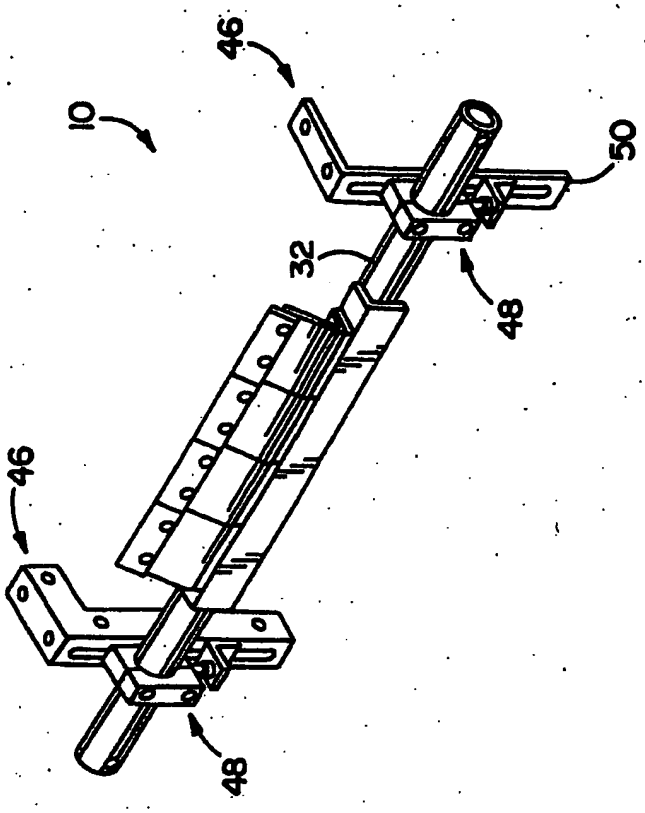

FIG. 2

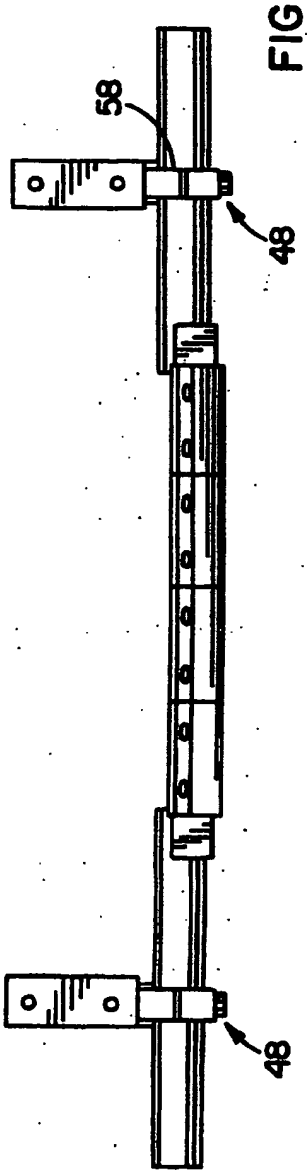

FIG. 3

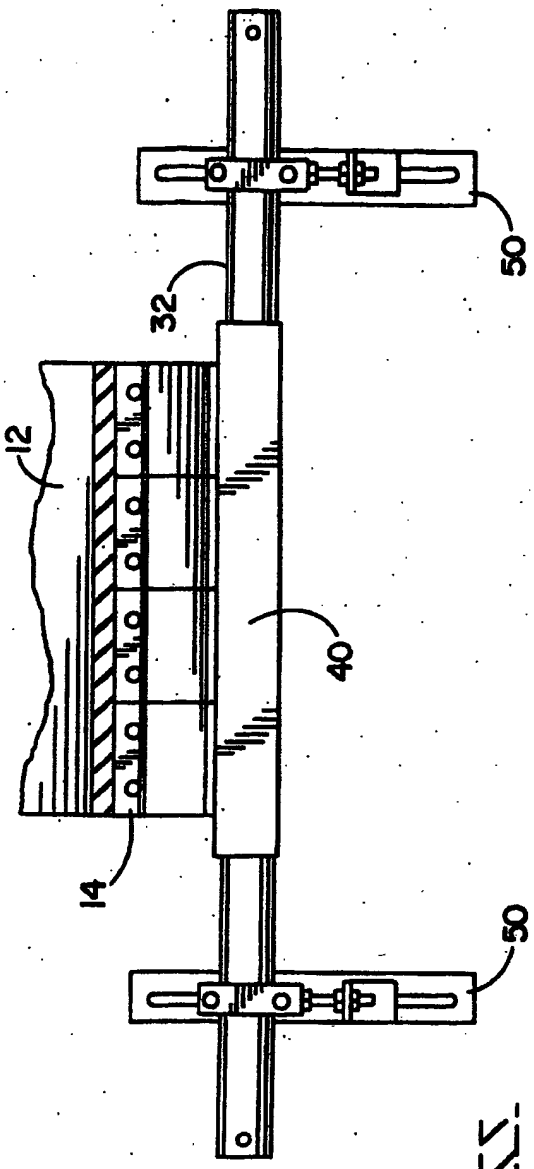

FIG. 4

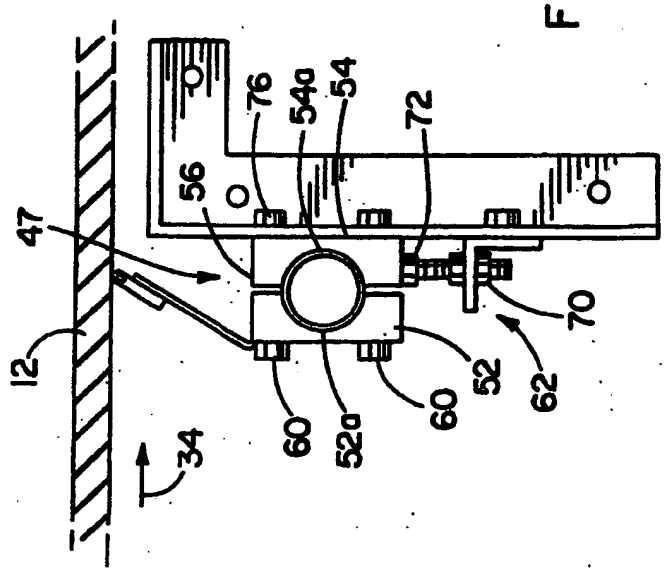

FIG. 5

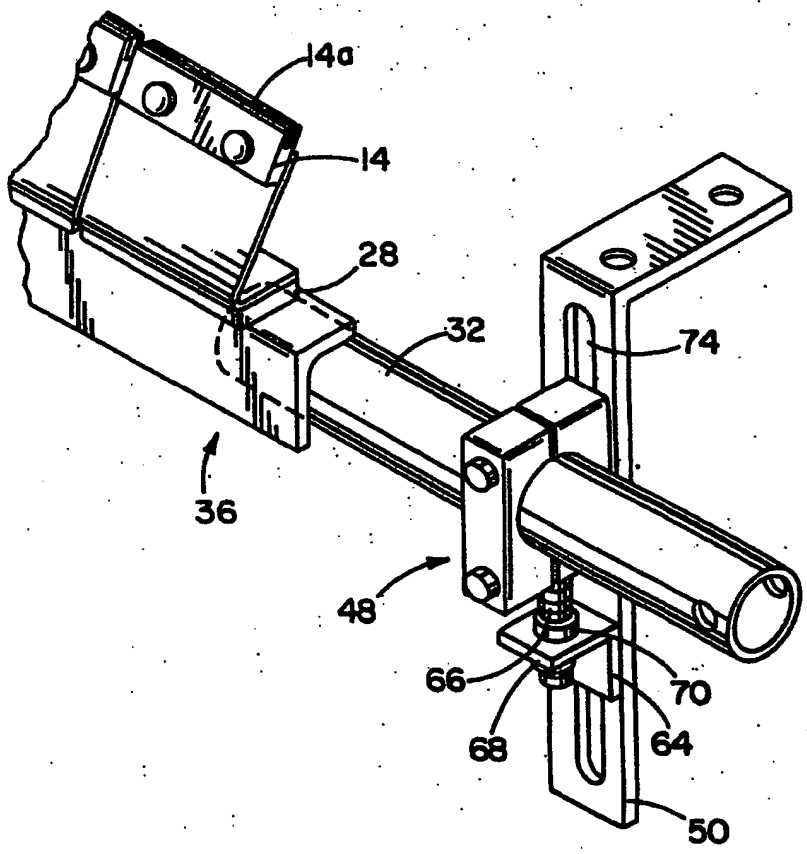

FIG. 6

FIG. 7

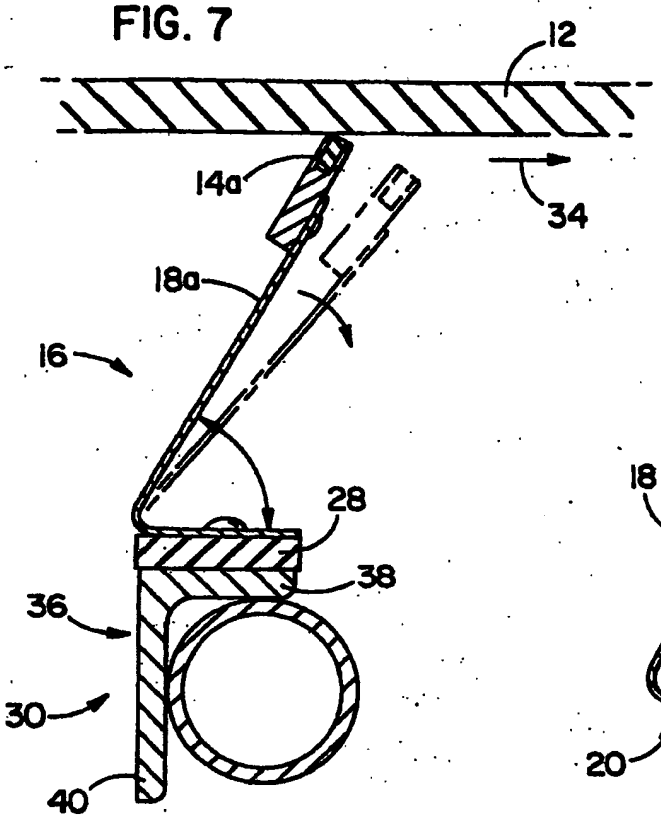

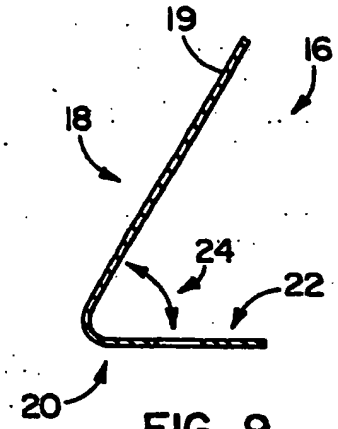

FIG. 9

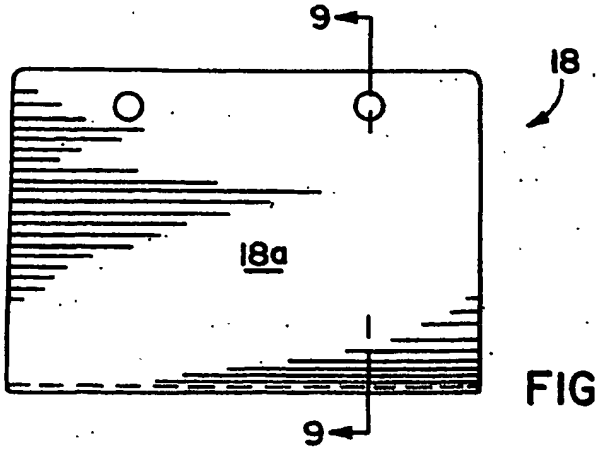

FIG. 8

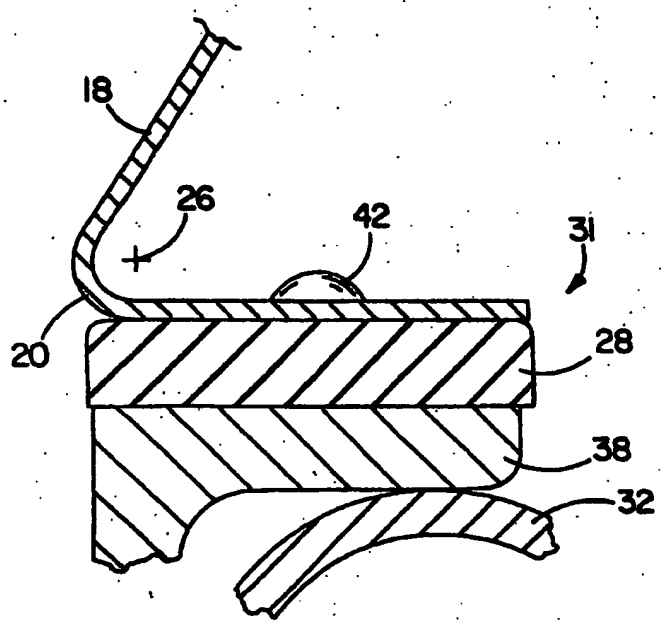

FIG. 7A

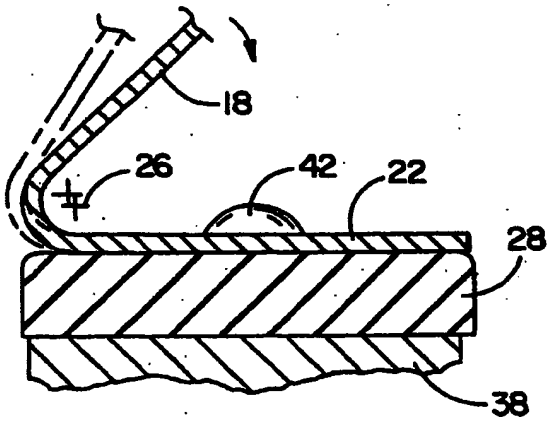

FIG. 7B

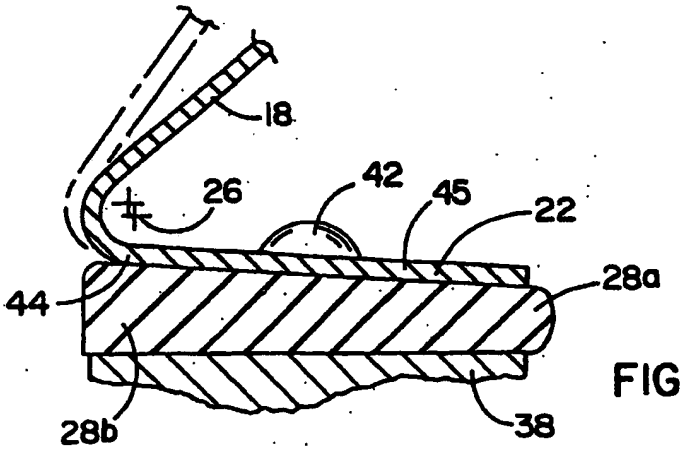

FIG. 7C

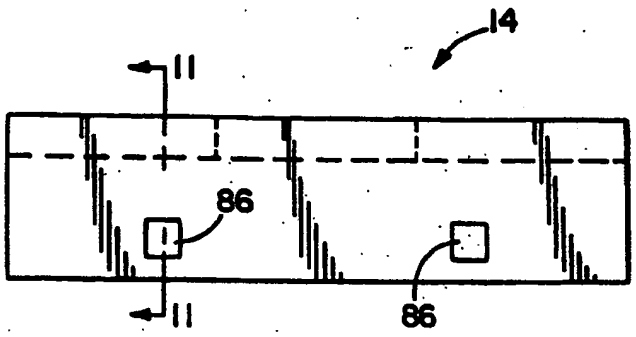

FIG. 10

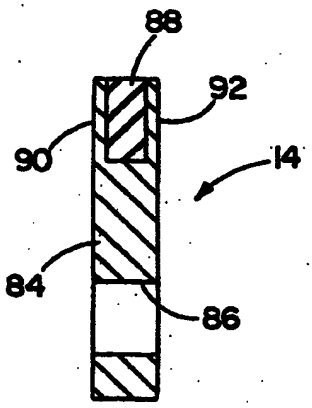

FIG. 11

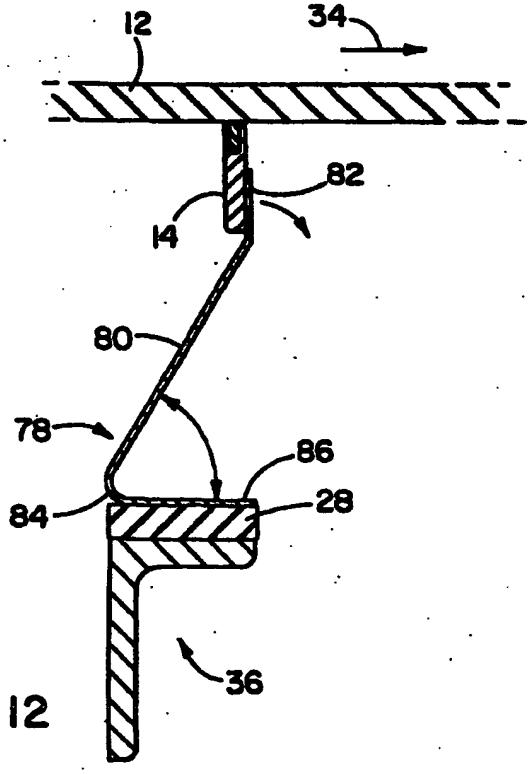

FIG. 12

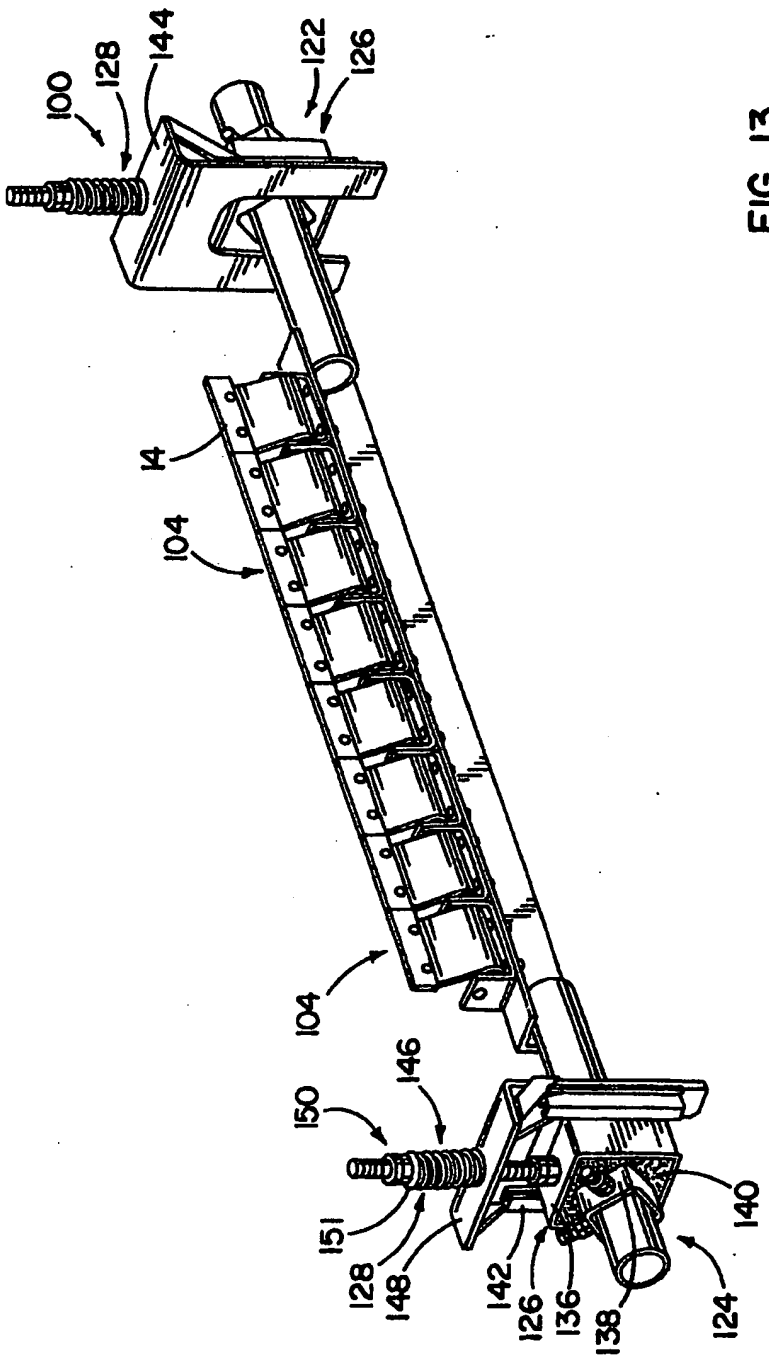
100
128
144
122
126
14
104
104
146
150
151
128
148
142
126
136
138
140
124

FIG. 13

FIG. 14

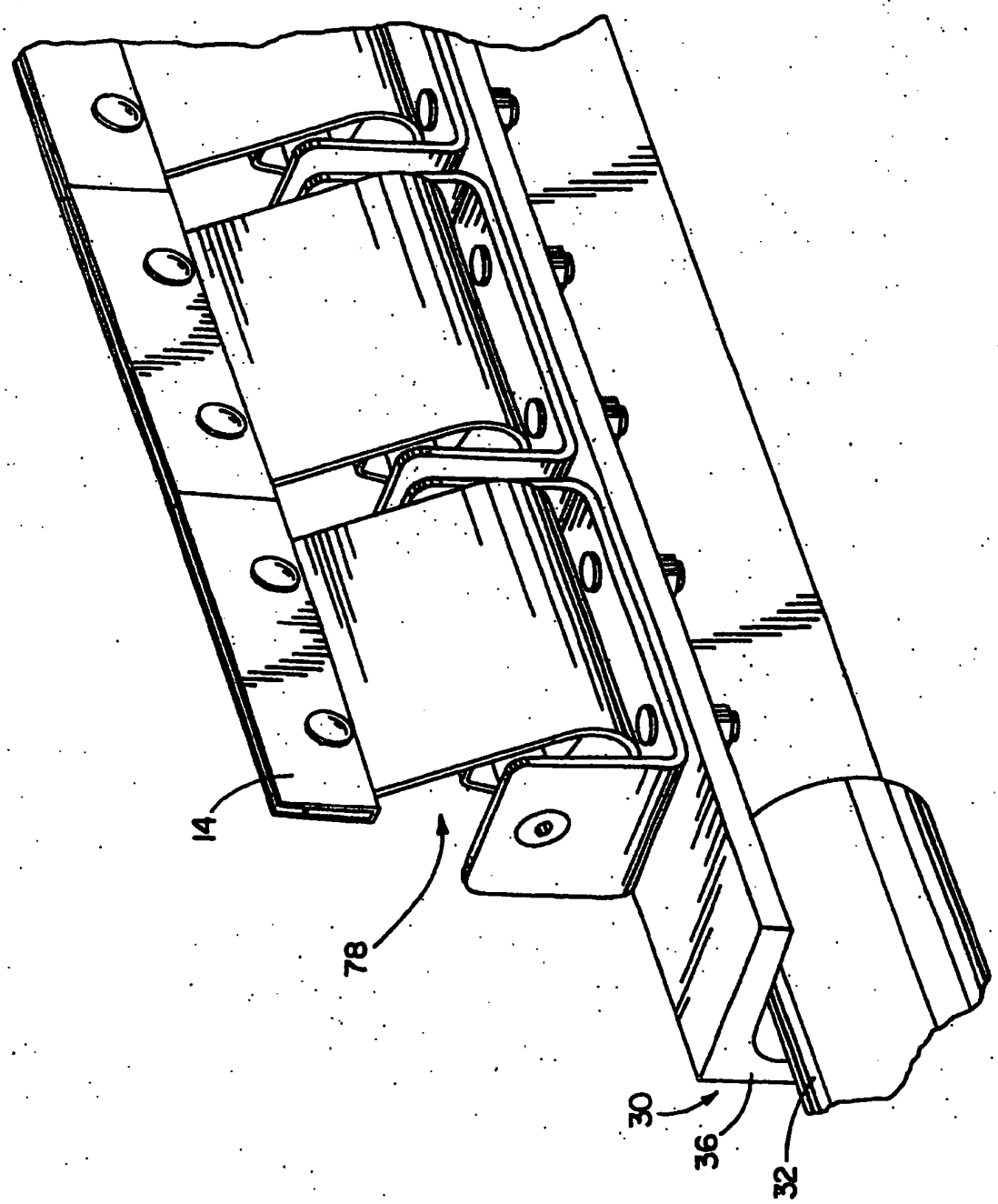

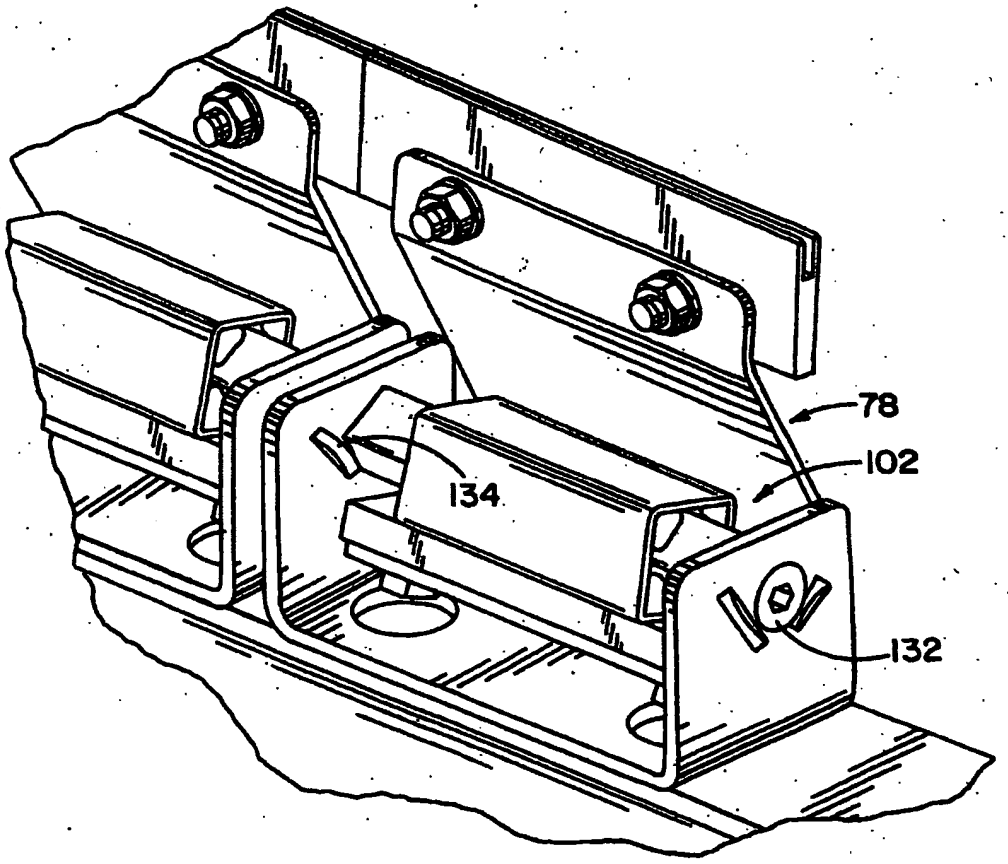

FIG. 15

FIG. 16

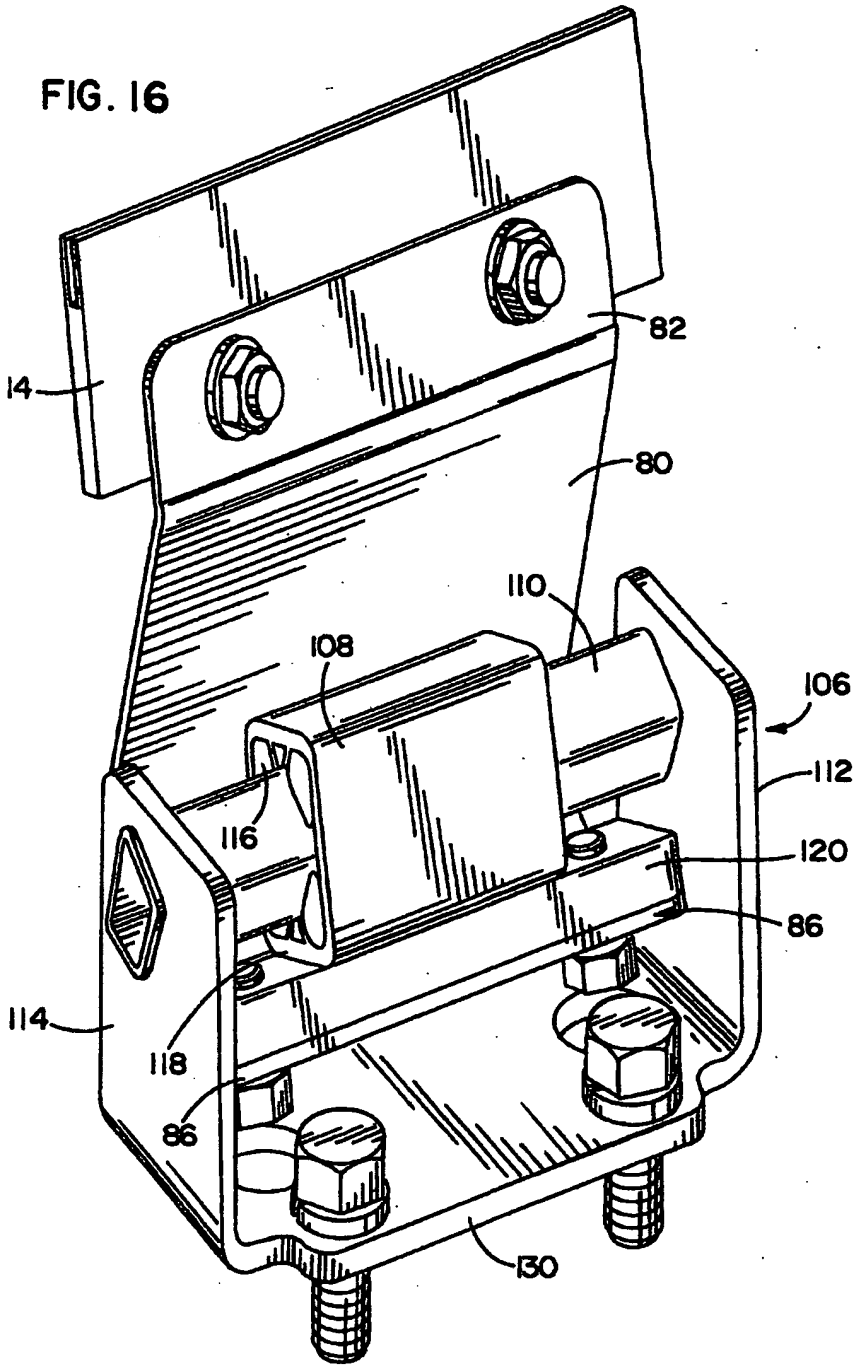

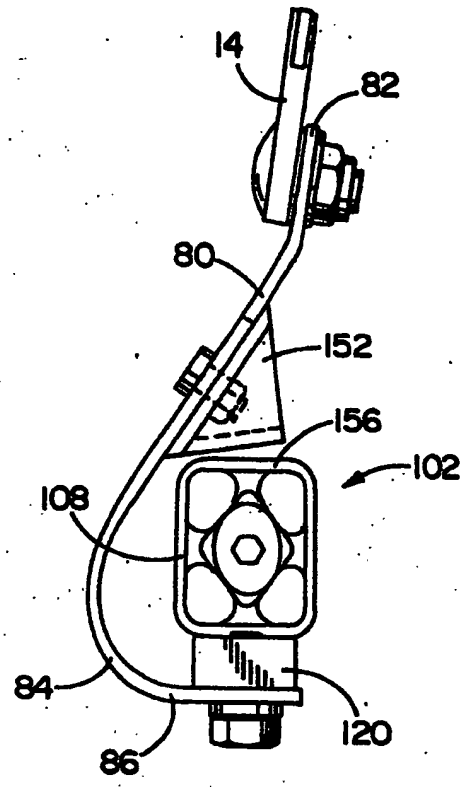
14
82
80
152
156
102
108
84
120
86

FIG. 17

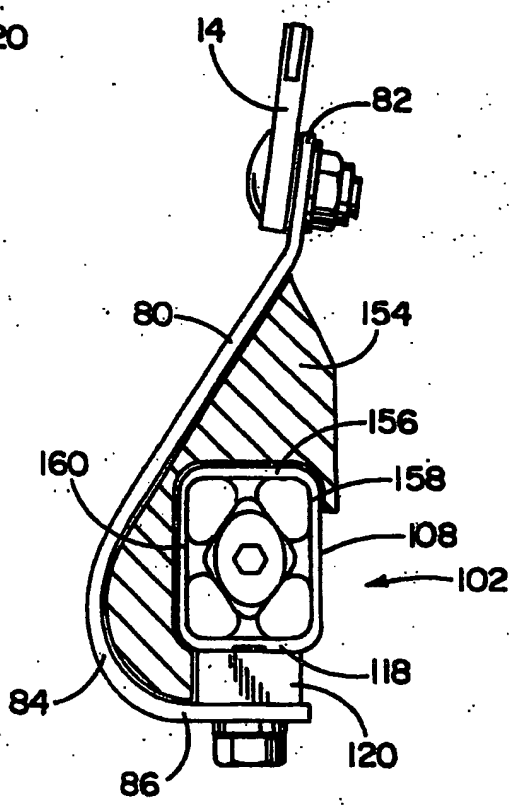
14
82
80
154
156
160
158
108
102
118
84
120
86

FIG. 18

SSF:ddj

October 28, 2004
79606

Inventor: Brett Edwin DeVries et al.
Appln. No.: 10/686,190; Filed: October 15, 2003
Title: Conveyor Belt Cleaning System

Enclosed herewith please find:
1. Transmittal of Formal Drawings (1 page)
2. Twelve (12) sheets of formal drawings

Hon. Commissioner for Patents

Sir:

Please acknowledge receipt of the above-identified documents by applying the Patent and Trademark Office receipt stamp hereto and mailing this card.

Respectfully,

FITCH, EVEN, TABIN & FLANNERY

SSF:ddj

October 28, 2004
79606

Inventor: Brett Edwin DeVries et al.
Appln. No.: 10/686,190; Filed: October 15, 2003
Title: Conveyor Belt Cleaning System

Enclosed herewith please find:
1. Transmittal of Formal Drawings (1 page)
2. Twelve (12) sheets of formal drawings

Hon. Commissioner for Patents

Sir:

Please acknowledge receipt of the above-identified documents by applying the Patent and Trademark Office receipt stamp hereto and mailing this card.

Respectfully,

FITCH, EVEN, TABIN & FLANNERY

41

UNITED STATES PATENT AND TRADEMARK OFFICE

UNITED STATES DEPARTMENT OF COMMERCE
United States Patent and Trademark Office
Address: COMMISSIONER FOR PATENTS
P.O. Box 1450
Alexandria, Virginia 22313-1450
www.uspto.gov

SSF

APPLICATION NO.	FILING DATE	FIRST NAMED INVENTOR	ATTORNEY DOCKET NO.	CONFIRMATION NO.
10/686,190	10/15/2003	Brett Edwin DeVries	618 79606	3801

22242 7590 02/23/2005

FITCH EVEN TABIN AND FLANNERY
120 SOUTH LA SALLE STREET
SUITE 1600
CHICAGO, IL 60603-3406

EXAMINER	
TRAN, KHOI H	

ART UNIT	PAPER NUMBER
3651	

DATE MAILED: 02/23/2005

Please find below and/or attached an Office communication concerning this application or proceeding.

Supplemental Notice of Allowability	Application No. 10/686,190	Applicant(s) DEVRIES ET AL.	
	Examiner Khoi H Tran	Art Unit 3651	

-- ***The MAILING DATE of this communication appears on the cover sheet with the correspondence address***--

All claims being allowable, PROSECUTION ON THE MERITS IS (OR REMAINS) CLOSED in this application. If not included herewith (or previously mailed), a Notice of Allowance (PTOL-85) or other appropriate communication will be mailed in due course. **THIS NOTICE OF ALLOWABILITY IS NOT A GRANT OF PATENT RIGHTS.** This application is subject to withdrawal from issue at the initiative of the Office or upon petition by the applicant. See 37 CFR 1.313 and MPEP 1308.

1. ☒ This communication is responsive to *Consideration of IDS filed 09/27/2004*.

2. ☒ The allowed claim(s) is/are *23-41*.

3. ☒ The drawings filed on *29 November 2004* are accepted by the Examiner.

4. ☐ Acknowledgment is made of a claim for foreign priority under 35 U.S.C. § 119(a)-(d) or (f).
   a) ☐ All b) ☐ Some* c) ☐ None of the:
      1. ☐ Certified copies of the priority documents have been received.
      2. ☐ Certified copies of the priority documents have been received in Application No. _____ .
      3. ☐ Copies of the certified copies of the priority documents have been received in this national stage application from the International Bureau (PCT Rule 17.2(a)).

   * Certified copies not received: _____.

Applicant has THREE MONTHS FROM THE "MAILING DATE" of this communication to file a reply complying with the requirements noted below. Failure to timely comply will result in ABANDONMENT of this application.
THIS THREE-MONTH PERIOD IS NOT EXTENDABLE.

5. ☐ A SUBSTITUTE OATH OR DECLARATION must be submitted. Note the attached EXAMINER'S AMENDMENT or NOTICE OF INFORMAL PATENT APPLICATION (PTO-152) which gives reason(s) why the oath or declaration is deficient.

6. ☐ CORRECTED DRAWINGS (as "replacement sheets") must be submitted.
   (a) ☐ including changes required by the Notice of Draftsperson's Patent Drawing Review (PTO-948) attached
      1) ☐ hereto or 2) ☐ to Paper No./Mail Date _____.
   (b) ☐ including changes required by the attached Examiner's Amendment / Comment or in the Office action of Paper No./Mail Date _____.

   Identifying indicia such as the application number (see 37 CFR 1.84(c)) should be written on the drawings in the front (not the back) of each sheet. Replacement sheet(s) should be labeled as such in the header according to 37 CFR 1.121(d).

7. ☐ DEPOSIT OF and/or INFORMATION about the deposit of BIOLOGICAL MATERIAL must be submitted. Note the attached Examiner's comment regarding REQUIREMENT FOR THE DEPOSIT OF BIOLOGICAL MATERIAL.

Attachment(s)

1. ☐ Notice of References Cited (PTO-892)
2. ☐ Notice of Draftperson's Patent Drawing Review (PTO-948)
3. ☒ Information Disclosure Statements (PTO-1449 or PTO/SB/08), Paper No./Mail Date 09/04
4. ☐ Examiner's Comment Regarding Requirement for Deposit of Biological Material
5. ☐ Notice of Informal Patent Application (PTO-152)
6. ☐ Interview Summary (PTO-413), Paper No./Mail Date _____.
7. ☐ Examiner's Amendment/Comment
8. ☐ Examiner's Statement of Reasons for Allowance
9. ☐ Other _____.

Khoi H. Tran

Khoi H Tran
Primary Examiner
Art Unit: 3651

USPTO SEP 27 2004 PATENT & TRADEMARK OFFICE

PTO/SB/08a
Substitute for Form 1449A/PTO

INFORMATION DISCLOSURE STATEMENT BY APPLICANT

(Use as many sheets as necessary)

Sheet 1 of 1

Application Number	10/686,190
Filing Date	October 15, 2003
First Named Inventor	Brett Edwin DeVRIES et al.
Art Unit	3651
Examiner Name	Khoi H. TRAN
Attorney Docket	79606

U.S. PATENT DOCUMENTS

Examiner Initials*	Cite No.[1]	Document Number Number-Kind Code[2]	Publication Date MM-DD-YYYY	Name of Patentee or Applicant of Cited Document	Pages, Columns, Lines, Where Relevant Passages or Relevant Figures Appear
KT		US-6,749,725 B1	06-15-2004	Isometsä et al.	

FOREIGN PATENT DOCUMENTS

Examiner Initials*	Cite No.[1]	Foreign Patent Document Country Code[3]-Number[4]-Kind Code[5]	Publication Date MM-DD-YYYY	Name of Patentee or Applicant of Cited Document	Pages, Columns, Lines, Where Relevant Passages or Relevant Figures Appear	T[6]

Examiner Signature	K. Tran	Date Considered	2/18/05

*EXAMINER: Initial if reference considered, whether or not citation is in conformance with MPEP 609. Draw line through citation if not in conformance and not considered. Include copy of this form with next communication to applicant.
[1] Applicant's unique citation designation number (optional). [2] See Kind Codes of USPTO Patent Documents at www.uspto.gov or MPEP 901.04. [3] Enter Office that issued the document, by the two-letter code (WIPO Standard ST.3). [4] For Japanese patent documents, the indication of the year of the reign of the Emperor must precede the serial number of the patent document. [5] Kind of document by the appropriate symbols as indicated on the document under WIPO Standard ST.16 if possible. [6] Applicant is to place a check mark here if English language Translation is attached.

Transaction History

Date	Transaction Description
04-05-2005	Recordation of Patent Grant Mailed
03-16-2005	Issue Notification Mailed
04-05-2005	Patent Issue Date Used in PTA Calculation
03-04-2005	Receipt into Pubs
03-04-2005	Dispatch to FDC
11-01-2004	Workflow - Drawings Finished
03-04-2005	Dispatch to FDC
03-04-2005	Application Is Considered Ready for Issue
11-29-2004	Issue Fee Payment Verified
11-29-2004	Applicant Has Filed a Verified Statement of Small Entity Status in Compliance with 37 CFR 1.27
02-23-2005	Mail Miscellaneous Communication to Applicant
02-22-2005	Miscellaneous Communication to Applicant - No Action Count
11-29-2004	Issue Fee Payment Received
09-27-2004	Reference capture on IDS
09-27-2004	Information Disclosure Statement (IDS) Filed
10-25-2004	Receipt into Pubs
09-08-2004	Receipt into Pubs
09-07-2004	Workflow - File Sent to Contractor
08-26-2004	Mail Notice of Allowance
08-26-2004	Mail Examiner's Amendment
08-23-2004	Examiner's Amendment Communication
08-23-2004	Notice of Allowance Data Verification Completed
08-23-2004	Examiner Interview Summary Record (PTOL - 413)
07-20-2004	Mail Restriction Requirement
07-16-2004	Requirement for Restriction / Election
07-01-2004	IFW TSS Processing by Tech Center Complete
07-01-2004	Case Docketed to Examiner in GAU
03-18-2004	New or Additional Drawing Filed
04-02-2004	Application Return from OIPE
04-02-2004	Application Return TO OIPE
04-02-2004	Application Dispatched from OIPE
04-02-2004	Application Is Now Complete
03-18-2004	A statement by one or more inventors satisfying the requirement under 35 USC 115, Oath of the Applic
03-18-2004	Applicant has submitted new drawings to correct Corrected Papers problems
01-15-2004	Notice Mailed--Application Incomplete--Filing Date Assigned
01-10-2004	Cleared by OIPE CSR
12-03-2003	IFW Scan & PACR Auto Security Review
10-15-2003	Initial Exam Team nn

Close Window

This application is officially maintained in electronic form. To View: Click the desired Document Description. To Download and Print: Check the desired document(s) and click Start Download.

Available Documents

Mail Room Date	Document Description	Document Category	Page Count
03-07-2005	**Bibliographic Data Sheet**	**PROSECUTION**	**1**
02-23-2005	Notice of Allowance and Fees Due (PTOL-85)	PROSECUTION	2
02-23-2005	List of References cited by applicant and considered by examiner	PROSECUTION	1
02-23-2005	Bibliographic Data Sheet	PROSECUTION	1
11-29-2004	Issue Fee Payment Recorded	PROSECUTION	1
11-29-2004	Oath or Declaration filed	PROSECUTION	1
11-01-2004	Miscellaneous Incoming Letter	PROSECUTION	1
11-01-2004	Drawings	PROSECUTION	13
09-27-2004	Information Disclosure Statement (IDS) Filed	PROSECUTION	4
08-26-2004	Notice of Allowance and Fees Due (PTOL-85)	PROSECUTION	4
08-26-2004	Notice of Allowance and Fees Due (PTOL-85)	PROSECUTION	3
08-26-2004	Examiner Interview Summary Record (PTOL - 413)	PROSECUTION	2
08-26-2004	List of references cited by examiner	PRIOR ART	1
08-26-2004	Search information including classification, databases and other search related notes	PROSECUTION	1
08-26-2004	Index of Claims	PROSECUTION	1
08-26-2004	Bibliographic Data Sheet	PROSECUTION	1
08-26-2004	Issue Information including classification, examiner, name, claim, renumbering, etc.	PROSECUTION	1
08-16-2004	Examiner's search strategy and results	PROSECUTION	1
07-20-2004	Requirement for Restriction/Election	PROSECUTION	5
03-18-2004	Drawings	PROSECUTION	12
03-18-2004	Oath or Declaration filed	PROSECUTION	4
01-15-2004	Pre-Exam Formalities Notice	PROSECUTION	2
10-15-2003	Fee Worksheet (PTO-875)	PROSECUTION	1
10-15-2003	Transmittal letter	PROSECUTION	6
10-15-2003	Specification	PROSECUTION	27
10-15-2003	Claims	PROSECUTION	9
10-15-2003	Abstract	PROSECUTION	1
10-15-2003	Drawings	PROSECUTION	12
10-15-2003	Oath or Declaration filed	PROSECUTION	4

Close Window

United States
Patent And
Trademark Office

P.O. Box 1450, Alexandria, Virginia 22313-1450 – www.uspto.gov

02/17/04

Knobbe Martens Olson & Bear LLP
2040 Main Street
14th Floor
Irvine, Ca 92614

Dear Applicant:

The Box PGPub replacement drawings for application number 10/686191 received on 12/18/03 by the U. S. Patent and Trademark Office will be included for patent publication.

Telephone inquiries should be directed to Kaletus King, Office of Pre-Grant Publication, at 703 605-4283.

Kaletus King

Signature of Reviewer, Office of Pre-Grant Publication

DEC 18 2003
PATENT & TRADEMARK OFFICE

No PPD

ASI.001CP2 PATENT

IN THE UNITED STATES PATENT AND TRADEMARK OFFICE

Applicant	:	David L. Hagen et al.
Appl. No.	:	10/686,191
Filed	:	October 15, 2003
For	:	METHOD AND APPARATUS FOR MIXING FLUIDS
Examiner	:	Unknown
Group Art Unit	:	Unknown

PETITION UNDER 37 CFR 1.182

Commissioner for Patents
P.O. Box 1450
Alexandria, VA 22313-1450

Mail Stop: PGPUB Drawings

Dear Sir:

Applicant respectfully petitions for entry of the enclosed replacement drawings under 37 CFR 1.182. This petition is accompanied by the fees set forth in 37 CFR 1.17(h). The Commissioner is hereby authorized to charge any additional fees which may be required or to credit any overpayment to Account No. 11-1410.

Respectfully submitted,

KNOBBE, MARTENS, OLSON & BEAR, LLP

Dated: 12-12-03

By: _____
Rabinder N. Narula
Registration No. 53,371
Attorney of Record
Customer No. 20,995
(949) 760-0404

12/18/2003 HDEMESS1 00000123 10686191
01 FC:8029 130.00 OP

H:\DOCS\RNN\RNN-7478.DOC
121103

UNITED STATES PATENT AND TRADEMARK OFFICE

Commissioner for Patents
United States Patent and Trademark Office
P.O. Box 1450
Alexandria, VA 22313-1450
www.uspto.gov

MORRISON & FOERSTER LLP
1650 TYSONS BOULEVARD
SUITE 300
MCLEAN, VA 22102

COPY MAILED

AUG 2 1 2006

OFFICE OF PETITIONS

In re Application of :
Ho, et al. :
Application No. 10/686,194 : DECISION ON PETITION
Filed: October 9, 2003 : TO WITHDRAW
Attorney Docket No. 268422000900 : FROM RECORD
:

This is a decision on the Request to Withdraw as attorney or agent of record under 37 C.F.R. § 1.36(b), filed January 31, 2006.

The request is **NOT APPROVED**.

A grantable request to withdraw as attorney/agent of record must be signed by every attorney/agent seeking to withdraw or contain a clear indication that one attorney is signing on behalf of another/others. A request to withdraw will not be approved unless at least 30 (thirty) days would remain between the date of approval and the later of the expiration date of a time to file a response or the expiration date of the maximum time period which can be extended under 37 C.F.R. § 1.136(a).

The Office cannot approve the request at this time since the reasons provided do not meet any of the conditions under the mandatory or permissive categories enumerated in 37 CFR 10.40. Section 10.40 of Title 37 of the Code of Federal Regulation states, "[a] practitioner shall not withdraw from employment in a proceeding before the Office without permission from the Office[.]" More specifically, 37 CFR 10.40 states, "[i]f paragraph (b) of this section is not applicable, a practitioner may not request permission to withdraw in matter pending before the Office unless such request or such withdrawal is" for one the permissive reasons listed in 37 CFR 10.40(c). The reasons set forth in the request, "application is being transferred to another attorney at the request of the assignee", does not meet any the conditions set forth in 37 CFR 10.40.

In order to request or take action in a patent matter, the assignee must establish its ownership of the patent to the satisfaction of the Director. In this regard, a Statement under 37 CFR 3.73(b) must have either: (i) documentary evidence of a chain of title from the original owner to the assignee (*e.g.*, copy of an executed assignment), and a statement affirming that the documentary

evidence of the chain of title from the original owner to the assignee was or concurrently is being submitted for recordation pursuant to § 3.11; or (ii) a statement specifying where documentary evidence of a chain of title from the original owner to the assignee is recorded in the assignment records of the Office (*e.g.*, reel and frame number).

All future communications from the Office will continue to be directed to the above-listed address until otherwise notified by applicant.

Telephone inquiries concerning this decision should be directed to April Wise at 571-272-1642.

Denise Pothier
Petitions Examiner
Office of Petitions

cc: NOVAK DRUCE & QUIGG, LLP
1300 EYE STREET NW
400 EAST TOWER
WASHINGTON DC 20005

UNITED STATES PATENT AND TRADEMARK OFFICE

COMMISSIONER FOR PATENTS
UNITED STATES PATENT AND TRADEMARK OFFICE
P.O. BOX 1450
ALEXANDRIA, VA 22313-1450
WWW.USPTO.GOV

Paper No. None

BIRCH, STEWART, KOLASCH & BIRCH, LLP
10940 WILSHIRE BOULEVARD
LOS ANGELES CA 90024-4450

COPY MAILED

FEB 15 2005

OFFICE OF PETITIONS

In re Application of
Allen Petroskey et al.
Application No. 10/686,210
Filed: October 15, 2003
Attorney Docket No.: COL/04
Title: WRITING INSTRUMENT WITH ROTATABLE DESIGN ELEMENT

DECISION ON PETITION
UNDER 37 C.F.R. §1.137(b)

This is a decision on the petition filed October 4, 2004, pursuant to 37 C.F.R. §1.137(b)[1], to revive the above-identified application.

The above-identified application became abandoned for failure to submit the issue and publication fees in a timely manner in reply to the Notice of Allowance and Issue Fee Due, mailed June 16, 2004, which set a shortened statutory period for reply of three (3) months. No extensions of time are permitted for transmitting issue or publication fees[2]. Accordingly, the above-identified application became abandoned on September 17, 2004.

With the petition, Petitioner has submitted the petition, publication, and issue fees[3], as well as the proper statement of unintentional delay.

---

1 A grantable petition pursuant to 37 CFR 1.137(b) must be accompanied by:
(1) The reply required to the outstanding Office action or notice, unless previously filed;
(2) The petition fee as set forth in § 1.17(m);
(3) A statement that the entire delay in filing the required reply from the due date for the reply until the filing of a grantable petition pursuant to this paragraph was unintentional. The Commissioner may require additional information where there is a question whether the delay was unintentional, and;
(4) Any terminal disclaimer (and fee as set forth in § 1.20(d)) required pursuant to paragraph (d) of this section.

2 See MPEP §710.02(e).

3 An additional $20 has been charged to Petitioner's Deposit Account to cover the issue fee deficiency, as authorized in the letter received February 4, 2005.

Petitioner has met all requirements for a grantable petition under 37 C.F.R. §1.137(b). As such, the petition is **GRANTED**.

The application file is being forwarded to the Office of Patent Publications for further processing into a patent.

It is noted that the address listed on the petition differs from the address of record. The application file does not indicate a change of correspondence address has been filed in this case, although the address given on the petition differs from the address of record. If petitioner desires to receive future correspondence regarding this application, the change of correspondence address must be submitted. A courtesy copy of this decision will be mailed to petitioner. However, all future correspondence will be directed to the address of record until such time as appropriate instructions are received to the contrary. Petitioner will not receive future correspondence related to this application unless Change of Correspondence Address, Patent Form (PTO/SB/122) is submitted for the above-identified application. For petitioner's convenience, a blank Change of Correspondence Address, Patent Form (PTO/SB/122), may be found at http://www.uspto.gov/web/forms/sb0122.pdf.

The general phone number for the Office of Petitions which should be used for status requests is (571) 272-3282. Telephone inquiries regarding this decision should be directed to the undersigned at (571) 272-3225.

Paul Shanoski
Senior Attorney
Office of Petitions
United States Patent and Trademark Office

cc: SELDON,ROBERT
Birch Stewart Kolasch and Birch LLP
10940 Wilshire Blvd 18th Floor
Los Angeles, CA 90024

UNITED STATES PATENT AND TRADEMARK OFFICE

COMMISSIONER FOR PATENTS
UNITED STATES PATENT AND TRADEMARK OFFICE
P.O. BOX 1450
ALEXANDRIA, VA 22313-1450
www.uspto.gov

JJGJR.: 01-05

Paper No: __

COPY MAILED

JAN 27 2005

OFFICE OF PETITIONS

CHERSKOV & FLAYNIK
THE CIVIC OPERA BUILDING
20 NORTH WACKER DRIVE, SUITE 1447
CHICAGO IL 60606

COPY MAILED

CANCELLED

JAN 26 2005

OFFICE OF PETITIONS

In re Application of
Weber, et al.
Application No. 10/686,238
Filed: 15 October, 2003
Attorney Docket No. 0091/01263

ON PETITION

This is a decision on the petition under ¶(a) of 37 C.F.R. §1.47, filed on 15 November, 2004.

The petition is **GRANTED**.

BACKGROUND

The record indicates:

- the application was filed on 15 October, 2003, without, *inter alia*, a fully executed oath or declaration; and

- on 10 September, 2004, the Office mailed a Notice to File Missing Parts;

- on 15 November, 2004, Petitioner filed, *inter alia*, the instant petition under 37 C.F.R. §1.47, with fee; an oath/declaration signed by the named inventors–save non-signing inventor Brian Keith Walker (Mr. Walker)–for themselves and on behalf of Mr. Walker; and, *inter alia*, a narrative within the petition and a separate statement and documents by/from Petitioner Michael J. Cherskov (Reg. No. 33,664) and a co-inventors Frank William Weber (Mr. Weber) and Jeffrey Kent Pruitt (Mr. Pruitt), which together represent that the entire application (specification, claims, drawings) was delivered by mail to Mr. Walker through his

counsel and that Mr. Walker has nonetheless failed to sign the oath or declaration; and sets forth Mr. Walker's last known address.

Lastly, Petitioner has submitted a declaration in compliance with 37 C.F.R. §1.63 and §1.64.

This application and papers have been reviewed and found in compliance with 37 C.F.R. §1.47(a).

This application hereby is **ACCORDED status under 37 C.F.R. §1.47(a)**.

As provided under 37 C.F.R. §1.47(a), the Office will forward notice of this application's filing to the non-signing inventor at the address given in the petition.

Notice of the filing of this application also will be published in the Official Gazette.

This file is being released to OIPE for processing as necessary to reflect the instant decision before being released for examination in due course.

Telephone inquiries concerning this decision may be directed to the undersigned at (571) 272-3214.

John J. Gillon, Jr.
Senior Attorney
Office of Petitions

UNITED STATES PATENT AND TRADEMARK OFFICE

COMMISSIONER FOR PATENTS
UNITED STATES PATENT AND TRADEMARK OFFICE
P.O. BOX 1450
ALEXANDRIA, VA 22313-1450
www.uspto.gov

JJGJR.: 01-05

Paper No: __

BRIAN KEITH WALKER
4834 S. 193RD AVENUE
BROKEN ARROW, OK 74014

COPY MAILED
JAN 27 2005
OFFICE OF PETITIONS

COPY MAILED
CANCELLED
JAN 26 2005
OFFICE OF PETITIONS

In re Application of
Weber, et al.
Application No. 10/686,238
Filed: 15 October, 2003
Attorney Docket No. 0091/01263

COMMUNICATION

Dear Brian Keith Walker:

You are named as inventor in the above-identified United States patent application, filed under the provisions of 35 U.S.C. §116 (United States Code), and 37 C.F.R. §1.47, ¶a, Rules of Practice in Patent Cases.

Should a patent be granted on the application you will be designated therein as inventor.

As a named inventor you are entitled to inspect any paper in the file wrapper of the application, order copies of all or any part thereof (at a prepaid cost per 37 C.F.R. §1.19) or make your position of record in the application.

Alternatively, you may arrange to do any of the preceding through a registered patent attorney or agent presenting written authorization from you. If you care to join the application, counsel of record (see below) would presumably assist you. Joining in the application would entail the filing of an appropriate oath or declaration by you pursuant to 37 C.F.R. §1.63.

Requests for information regarding your application should be directed to the File Information Unit at (703) 308-2733.

Information regarding how to pay for and order a copy of the application, or a specific paper in

the application, should be directed to Certification Division at (703) 308-9726 or toll-free: (800) 972-6382 (outside the Washington D.C. area).

Telephone inquiries concerning this correspondence may be directed to the undersigned at (571) 272-3214.

John J. Gillon, Jr.
Senior Attorney
Office of Petitions

Counsel of Record:
CHERSKOV & FLAYNIK
THE CIVIC OPERA BUILDING
20 NORTH WACKER DRIVE, SUITE 1447
CHICAGO IL 60606

UNITED STATES PATENT AND TRADEMARK OFFICE

Commissioner for Patents
United States Patent and Trademark Office
P.O. Box 1450
Alexandria, VA 22313-1450
www.uspto.gov

Paper No.

HORST KASPER
13 FOREST DRIVE
WARREN, NJ 07059

COPY MAILED

SEP 24 2004

OFFICE OF PETITIONS

In re Application of :
Przybylski et al. :
Application No. 10/686,249 : DECISION ON PETITION
Filed: October 15, 2003 :
Attorney Docket No. PRO202 :

This is a decision on "PETITION TO RETAIN FILING DATE UNDER 37 CFR 1.17(h)," filed August 9, 2004.

Application papers in the above-identified application were deposited on October 15, 2003. However, on May 4, 2004, the Initial Patent Examination Division mailed applicants a "Notice of Incomplete Nonprovisional Application." Applicants were notified that the application papers had not been accorded a filing date because the application was filed without a complete specification as prescribed by 35 U.S.C. 112.

In reply, applicants filed the instant petition, asserting that the Claims and the Abstract of the Disclosure were part of the application papers filed with the Office on October 15, 2003. Applicants acknowledge, however, that the improper headings of "PATENT RESERVATION" and "ABBREVIATION" were used.

It is obvious from the petition that the Claims (and the Abstract) were not actually missing on October 15, 2003. Rather, improper headings were used. A review of the application as filed confirms the presence of these papers.

The petition is **GRANTED**.

However, it is noted that the new specification and claims that were filed on petition do not comply with 37 CFR 1.121 and 1.125. **An amendment in compliance with 37 CFR 1.121 to correct the errors in the application should be filed before the first Office action on the merits.**

The petition fee is required, since the petition was not necessary to correct any PTO error.

This application is being forwarded to the Office of Initial Patent Examination for processing with a filing date of October 15, 2003, using the application papers received on that date.

Telephone inquiries related to this decision should be directed to the undersigned at (571) 272-3219.

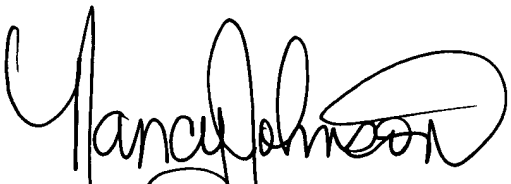

Nancy Johnson
Senior Petitions Attorney
Office of Petitions

UNITED STATES PATENT AND TRADEMARK OFFICE

Commissioner for Patents
United States Patent and Trademark Office
P.O. Box 1450
Alexandria, VA 22313-1450
www.uspto.gov

Paper No.

DINNIN & DUNN, P.C.
2701 CAMBRIDGE COURT, STE. 500
AUBURN HILLS, MI 48326

COPY MAILED

JUL 3 0 2004

OFFICE OF PETITIONS

In re Application of :
Kimberly Murley and Debra Tiensivu :
Application No. 10/686,251 : DECISION REFUSING STATUS
Filed: October 15, 2003 : UNDER 37 CFR §1.47(b)
Attorney Docket No. 0942-00311 :
Title: OFFSET SEAM SEWING PROCESS :

This is in response to the petition under 37 CFR 1.47, filed June 15, 2004.

The petition under 37 CFR § 1.47(b) is **DISMISSED**.

Rule 47 applicant is given TWO MONTHS from the mailing date of this decision to reply, correcting the below-noted deficiencies. Any reply should be entitled "Request for Reconsideration of Petition Under 37 CFR §1.47(b)," and should only address the deficiencies noted below, except that the reply may include an oath or declaration executed by the non-signing inventor. **Failure to respond will result in abandonment of the application.** Any extensions of time will be governed by 37 CFR §1.136(a).

The above-identified application was filed on October 15, 2003, with an unexecuted declaration. Kimberly Murley and Debra Tiensivu were named as joint inventors. Accordingly, on January 15, 2004, applicants were mailed a "Notice to File Missing Parts of Application," requiring an executed oath or declaration with a surcharge for its late filing. This Notice set a period for reply of two months, with extensions of time obtainable under § 1.136(a).

Petitioner filed the instant response, made timely by an accompanying petition for extension for response within the third month (and fee). The response included:

- a statement by Joe Wieczorek;
- a statement by Rod Slobodian;
- a Statement of Law by patent attorney Robert Dunn;
- added pages to combined declaration executed by Rod Slobodian, Secretary, for assignee Irvin Automotive Products, Inc. on behalf of the non-signing inventors; and
- the petition fee.

37 CFR § 1.47(b) provides that:

> Whenever all of the inventors refuse to execute an application for patent, or cannot be found or reached after diligent effort, a person to whom an inventor has assigned or agreed in writing to assign the invention, or who otherwise shows sufficient proprietary interest in the matter justifying such action, may make application for patent on behalf of and as agent for all the inventors. The oath or declaration in such an application must be accompanied by a petition including proof of the pertinent facts, a showing that such action is necessary to preserve the rights of the parties or to prevent irreparable damage, the fee set forth in § 1.17(h), and the last known address of all of the inventors. An inventor may subsequently join in the application by filing an oath or declaration complying with § 1.63.

Accordingly, a grantable petition under 37 CFR § 1.47(b) requires: (1) an acceptable oath or declaration in compliance with 37 CFR § 1.63 and 1.64 or 1.175; (2) the rule 47 applicant must state his or her relationship to the inventor as required by 37 CFR § 1.64; (3) proof that the non-signing inventor cannot be found or reached after diligent effort, or refuses to sign the oath or declaration after having been presented with the application papers (specification, claims and drawings); (4) the petition fee; (5) a statement of the last known address of the non-signing inventor; (6) that rule 47 applicant make out a *prima facie* case (I) that the invention has been assigned to him or her or (ii) that the inventor has agreed in writing to assign the invention to him or her or (iii) otherwise demonstrate a proprietary interest in the subject matter of the invention; and (7) rule 47 applicant must prove that the filing of the application is necessary (I) to preserve the rights of the parties or (ii) to prevent irreparable damage. See MPEP §409.03(g).

See 35 U.S.C. § 118; 37 CFR § 1.47; §§ 409.03 and 605 of the *Manual of Patent Examining Procedure* (8th ed)(Rev. May 2004)(MPEP).

The instant petition lacks requirements (3), (5), and (6):

As to requirement (3),

The proof that inventors Murley and Tiensivu cannot be reached or located to join in the application is lacking. Joseph Wieczorek states that on multiple occasions attempts were made to contact Tiensivu; however, inventor Tiensivu never returned his calls. As to any efforts to obtain inventor Murley's signature on the declaration, the petition received is silent.

Considering the evidence submitted, it cannot be concluded that petitioner has shown that the non-signing inventors cannot be found or reached after diligent effort to join in the application. The petition does not include adequate evidence to

support a conclusion that diligent efforts have been made to find or reach the non-signing inventors to have them join in this application. No efforts to find or reach inventor Murley were set forth. In regards to inventor Tiensivu, petitioner is not exact in the facts provided to show diligent effort. Moreover, not having been successful in contacting inventor Tiensivu by telephone, there is no indication that Rule 47 applicants attempted to contact her by mail or, if she has relocated, to determine her forwarding address, and to send the application papers to that address for consideration. See MPEP 409.03(d). If attempts to locate her at her last known address or to obtain a forwarding address or to locate the non-signing inventor by other means such as through E-mail, or the Internet continue to fail, then applicants will have provided the necessary proof required under 37 CFR 1.47 that the inventor cannot be reached or found after diligent effort. Details of the efforts to locate the non-signing inventors should be set forth in an affidavit or declaration of facts by a person with first hand knowledge of the details. Applicants should also submit documentary evidence such as the results of an E-mail or Internet searches.

As to requirement (5),

The petition filed June 15, 2004 does not include statements of the last known addresses of the non-signing inventors. On renewed petition, petitioner should include a paper setting forth the last known addresses of the non-signing inventors[1]. Petitioner is reminded that the last known address should be an address where the inventors customarily receive mail.

As to requirement (6),

Rule 47(b) applicant must prove that, as of the date the application was deposited in the United States Patent and Trademark Office, (a) the invention had been assigned to the applicant, or (b) the inventor had agreed in writing to assign the invention to the applicant, or (c) the applicant otherwise had sufficient proprietary interest in the subject matter to justify filing of the application.

Petitioner indicates that the invention has not been assigned, and there is no written agreement to assign. To show proprietary interest, applicants submit a statement of law.

> A proprietary interest obtained otherwise than by assignment or agreement to assign may be demonstrated by an appropriate legal memorandum to the effect that a court of competent jurisdiction (federal, state or foreign) would by the weight of the authority in the jurisdiction award title of the

---

[1] If this were the only deficiency in the petition, the Office might deem the last known addresses to be as set forth in the declaration. However, in this instance, there are other deficiencies, including the omission of a declaration for patent, executed pursuant to § 1.47(b).

invention to the rule 47 applicant. The facts in support of any conclusion that a court would award title to the rule 47 applicant should be made of record by way of an affidavit or declaration of the person having firsthand knowledge of same. The legal memorandum should be prepared and signed by an attorney at law familiar with the law of the jurisdiction involved. A copy (in the English language) of a statute (if other than the United States statute) or a court decision (if other than a reported decision of a federal court or a decision reported in the United States Patent Quarterly) relied on to demonstrate a proprietary interest should be made of record. See MPEP 409.03(f).

Petitioner's statement of law is not sufficient. Petitioner sets forth the conclusion, but does not adequately support that conclusion. The statement of law fails to cite statutes or court decisions consistent with the conclusion. In other words, the statement of law provided is not a memorandum of law showing that rule 47 applicants have a proprietary interest.

Further, as to requirement 1,

Of course, acceptance of the declaration executed by Rod Slobodian is contingent on an adequate showing that Irvin Automotive Products, Inc., has sufficient proprietary interest in the invention to make application for patent.

On Request for Reconsideration, to avoid abandonment and attain 1.47 status, applicant must correct the noted deficiencies and provide a 1.47 petition in compliance with all applicable law.

Further correspondence with respect to this decision should be addressed as follows:

By mail:
Mail Stop Petition
Commissioner for Patents
P.O. Box 1450
Alexandria, VA 22313-1450

By FAX:
(703) 872-9306
ATTN: NANCY JOHNSON
SENIOR PETITIONS ATTORNEY

By hand:
Effective June 5, 2004, patent correspondence delivered by hand or delivery services, **other than the USPS**, to the Customer Window must be addressed as follows:

U.S. Patent and Trademark Office
220 20th Street S.
Customer Window, Mail Stop
Crystal Plaza Two, Lobby, Room 1B03
Arlington, VA 22202

Telephone inquiries related to this decision may be directed to the undersigned at (703) 305-0309 (or effective September 28, 2004 at (571) 272-3282).

Nancy Johnson
Senior Petitions Attorney
Office of Petitions

UNITED STATES PATENT AND TRADEMARK OFFICE

Commissioner for Patents
United States Patent and Trademark Office
P.O. Box 1450
Alexandria, VA 22313-1450
www.uspto.gov

Paper No.

DINNIN & DUNN, P.C.
2701 CAMBRIDGE COURT, STE. 500
AUBURN HILLS, MI 48326

COPY MAILED

FEB 2 5 2005

OFFICE OF PETITIONS

In re Application of	:	
Kimberly Murley and Debra Tiensivu	:	DECISION ACCORDING STATUS
Application No. 10/686,251	:	UNDER 37 CFR 1.47(b)
Filed: October 15, 2003	:	and
Attorney Docket No. 0942-00311	:	DISMISSING REQUEST UNDER
Title: OFFSET SEAM SEWING PROCESS	:	37 CFR 1.48
	:	

This is in response to the REQUEST FOR RECONSIDERATION OF PETITION UNDER 37 CFR §1.47(b), filed October 1, 2004 (certificate of mailing dated September 30, 2004). Therein, petitioner also requests correction of inventorship. This second request is properly treated as a petition under § 1.48[1].

The petition under 37 CFR 1.47(b) is **GRANTED**.

The petition under 37 CFR 1.48 is **DISMISSED**.

Applicant is given **TWO MONTHS** from the mailing date of this decision to reply, correcting the below-noted deficiencies. Any reply should be entitled "Request for Reconsideration of Petition Under 37 CFR 1.48." Any extensions of time will be governed by 37 CFR 1.136(a).

The above-identified application was filed on October 15, 2003, with an unexecuted declaration. Kimberly Murley and Debra Tiensivu were named as joint inventors. In response to the "Notice to File Missing Parts of Application," mailed January 15, 2004, on June 15, 2004, rule 47 applicant filed the initial petition. However, by decision mailed July 30, 2004, the petition was dismissed for failure to submit adequate proof of diligent effort to reach the non-signing inventors; lack of a statement of the last known addresses of the inventors; and failure to show proprietary interest.

In response, petitioner timely filed the instant renewed petition. Rule 47 applicant states that previously-named inventor Tiensivu is not an inventor. In support thereof,

---

[1] Such requests are normally processed by the primary examiner in the Technology Center.

petitioner provides an affidavit signed by Ms. Tiensivu along with a statement of no deceptive intent.

As to the remaining sole inventor, the petition includes a letter drafted by attorney Matthew Schmidt, in a representative capacity, for inventor Murley. Petitioner has, thereby, shown that inventor Murley (the "sole" inventor) refuses to join in the application within the meaning of § 1.47.

The renewed petition states that inventor Murley receives her mail via her attorney. The petition includes a statement of the last known address of attorney Matthew Schmidt.

The petition includes a legal memorandum to the effect that a court of competent jurisdiction, a Michigan state court, would by the weight of the authority in the jurisdiction award title of the invention to the rule 47 applicant. The facts in support of any conclusion that a court would award title to the rule 47 applicant were supplied on initial petition. Petitioner has now shown sufficient proprietary interest.

In view thereof, rule 47 applicant has now met all requirements for acceptance of the application under §1.47(b).

This application is hereby accorded Rule 1.47(b) status.

As provided in new Rule 1.47(c), this Office will forward notice of this application's filing to the non-signing inventor at the address given in the petition. Notice of the filing of this application will also be published in the Official Gazette.

Technology Center 3700 has been advised of this decision. The application file has, thereby, been forwarded to Technology Center 3765 for examination in due course.

Further, as to the petition under § 1.48

On initial petition filed June 15, 2004, petitioner submitted a declaration executed by Rod Slobodian on behalf of joint inventors Murley and Tiensivu. Petitioner now requests correction of the inventorship to solely name inventor Murley.

Amendment of the inventorship, pursuant to § 1.48(a) after an oath or declaration has been filed, requires:

(1) A request to correct the inventorship that sets forth the desired inventorship change;

(2) A statement from each person being added as an inventor and from each person being deleted as an inventor that the error in inventorship occurred without deceptive intention on his or her part;

(3) An oath or declaration by the actual inventor or inventors as required by § 1.63 or as permitted by §§ 1.42, 1.43 or § 1.47;

(4) The processing fee set forth in § 1.17(i); and

(5) If an assignment has been executed by any of the original named inventors, the written consent of the assignee (see § 3.73(b) of this chapter).

The processing fee has been charged to Deposit Account No. 04-1131, as authorized. However, the petition under § 1.48 must be **DISMISSED**. Petitioner has not provided an oath or declaration by the actual inventors. The only declaration filed identifies inventor Tiensivu as a joint inventor.

Further correspondence with respect to this decision should be addressed as follows:

By mail: Mail Stop Petition
Commissioner for Patents
P.O. Box 1450
Alexandria, VA 22313-1450

By fax: (703) 872-9306
ATTN: Office of Petitions

By hand: Customer Service Window
Randolph Building
401 Dulany Street
Alexandria, VA 22314

Telephone inquiries related to this decision may be directed to the undersigned at (571) 272-3219.

Nancy Johnson
Senior Petitions Attorney
Office of Petitions

UNITED STATES PATENT AND TRADEMARK OFFICE

Commissioner for Patents
United States Patent and Trademark Office
P.O. Box 1450
Alexandria, VA 22313-1450
www.uspto.gov

KIMBERLY MURLEY
C/O Attorney Matthew Schmidt
Reising, Ethington, Barnes, Kisselle, PC
201 West Big Beaver
Suite 400
Troy, MI 48084

COPY MAILED

FEB 2 5 2005

OFFICE OF PETITIONS

In re Application of :
Kimberly Murley and Debra Tiensivu :
Application No. 10/686,251 : LETTER
Filed: October 15, 2003 :
Attorney Docket No. 0942-00311 :
Title: OFFSET SEAM SEWING PROCESS :
:

Dear Ms. Murley:

You are named as an inventor[1] in the above-identified United States patent application filed under the provisions of 35 U.S.C. 118 (United States Code) and 37 CFR 1.47(b), Rules of Practice in Patent Cases. Should a patent be granted on the application you will be designated therein as an inventor.

As a named inventor you are entitled to inspect any paper in the file wrapper of the application, order copies of all or any part thereof (at a prepaid cost per 37 CFR 1.19) or make your position of record in the application. Alternatively, you may arrange to do any of the preceding through a registered patent attorney or agent presenting written authorization from you. If you care to join the application, counsel of record (see below) would presumably assist you. Joining in the application would entail the filing of an appropriate oath or declaration by you pursuant to 37 CFR 1.63. However, no action on your part is required for this patent to issue with you as a named inventor.

Telephone inquiries regarding this communication should be directed to Petitions Attorney Nancy Johnson at (571) 272-3219. Requests for information regarding your application should be directed to the File Information Unit at (703) 308-2733. Information regarding how to pay for and order a copy of the application, or a specific paper in the application, should be

[1] A petition to amend inventorship to delete inventor Tiensivu is pending.

directed to the Certification Division at (703) 308-9726 or 1-800-972-6382 (outside the Washington D.C. area).

Nancy Johnson
Senior Petitions Attorney
Office of Petitions

DINNIN & DUNN, P.C.
2701 CAMBRIDGE COURT, STE. 500
AUBURN HILLS, MI 48326

UNITED STATES PATENT AND TRADEMARK OFFICE

Commissioner for Patents
United States Patent and Trademark Office
P.O. Box 1450
Alexandria, VA 22313-1450
www.uspto.gov

Paper No.

DINNIN & DUNN, P.C.
2701 CAMBRIDGE COURT, STE. 500
AUBURN HILLS, MI 48326

COPY MAILED

AUG 16 2005

OFFICE OF PETITIONS

In re Application of	
Kimberly Murley and Debra Tiensivu	DECISION GRANTING PETITION
Application No. 10/686,251	UNDER 37 CFR 1.48
Filed: October 15, 2003	
Attorney Docket No. 0942-00311	
Title: OFFSET SEAM SEWING PROCESS	

This is in response to the REQUEST FOR RENEWED RECONSIDERATION OF PETITION UNDER 37 CFR §1.48, filed June 2, 2005 (and resubmitted June 8, 2005).

The petition under 37 CFR 1.48 is **GRANTED**.

The above-identified application was filed on October 15, 2003, with an unexecuted declaration. Kimberly Murley and Debra Tiensivu were named as joint inventors. In response to the "Notice to File Missing Parts of Application," mailed January 15, 2004, on June 15, 2004, applicants filed a petition under 1.47(a). However, by decision mailed July 30, 2004, the petition was dismissed for failure to submit adequate proof of diligent effort to reach the non-signing inventors; lack of a statement of the last known addresses of the inventors; and failure to show proprietary interest. In response, applicants filed a renewed petition under 1.47(b), asserting that previously-named inventor Tiensivu is not an inventor. In support thereof, petitioner submitted a declaration executed by Rod Slobodian on behalf of joint inventors Murley and Tiensivu, and an affidavit signed by Ms. Tiensivu along with a statement of no deceptive intent.

The petition under 1.47(b) was granted. However, the petition under 1.48 was dismissed for failure to submit a declaration by the actual inventors[1].

---

[1] Amendment of the inventorship, pursuant to § 1.48(a) after an oath or declaration has been filed, requires:

(1) A request to correct the inventorship that sets forth the desired inventorship change;

(2) A statement from each person being added as an inventor and from each person being deleted as an inventor that the error in inventorship occurred without deceptive intention on his or her part;

(3) An oath or declaration by the actual inventor or inventors as

On instant renewed petition, applicant filed a declaration executed by Rod Slobodian on behalf of the 47(b) applicant and sole inventor Kimberly Murley. Requirements 1, 2 and 4 above were previously met. None of the originally named inventors have executed an assignment.

In view of the papers filed on renewed petition, it has been found that this nonprovisional application, through error and without deceptive intent, improperly set forth the inventorship, and accordingly, this application has been corrected in compliance with 37 CFR 1.48(a). The inventorship of this application has been changed by deleting inventor Debra Tiensivu.

The Office of Initial Patent Examination (OIPE) has been advised of this decision. The application is, thereby, forwarded to OIPE for issuance of a corrected filing receipt and correction of Office records to reflect the inventorship as corrected. Thereafter, the application will be forwarded to OIPE for processing into a patent.

Telephone inquiries regarding this decision should be directed to the undersigned at (571) 272-3219.

Nancy Johnson
Senior Petitions Attorney
Office of Petitions

---

required by § 1.63 or as permitted by §§ 1.42, 1.43 or § 1.47;

(4) The processing fee set forth in § 1.17(i); and

(5) If an assignment has been executed by any of the original named inventors, the written consent of the assignee (see § 3.73(b) of this chapter).

UNITED STATES PATENT AND TRADEMARK OFFICE

Commissioner for Patents
United States Patent and Trademark Office
P.O. Box 1450
Alexandria, VA 22313-1450
www.uspto.gov

TOWNSEND AND TOWNSEND AND CREW LLP
TWO EMBARCADERO CENTER
EIGHTH FLOOR
SAN FRANCISCO, CA 94111-3834

MAILED

FEB 2 8 2006

Technology Center 2100

In re Application of: Manber
Application No. 10/686,255
Filed: October 14, 2003
For: SYSTEMS AND METHODS FOR MATCHING PARTICIPANTS TO A CONVERSATION

DECISION ON REQUEST TO WITHDRAW AS ATTORNEY OR AGENT

This is a decision on the Request To Withdraw from Representation filed November 7, 2005.

A grantable request to withdraw as attorney of record should indicate thereon the present mailing addresses of the attorney(s) who is/are withdrawing from the record and of the applicant. The request for withdrawal must be signed by every attorney seeking to withdraw or contain a clear indication that one attorney is signing on behalf of another/others. A request to withdraw will not be approved unless at least 30 (thirty) days would remain between the date of approval and the later of the expiration date of a time to file a response or the expiration date of the maximum time period which can be extended under 37 C.F.R. § 1.136(a). The effective date of withdrawal is the date of decision and not the date of request. See M.P.E.P. § 402.06. 37 C.F.R. § 10.40(a) further requires that the applicant or patent owner be notified of the withdrawal of the attorney or agent.

The request is **GRANTED**.

All future communications from the U.S. Patent and Trademark Office (Office) will be directed to the below-listed address until otherwise notified by applicant. This correspondence address is provided by the withdrawn attorney(s). Applicant is reminded of the obligation to promptly notify the Office of any change in correspondence address to ensure receipt of all communications from the Office.

for

Vincent N. Trans
Special Program Examiner
Technology Center 2100
Computer Architecture, Software, and
Information Security
571-272-3613

cc: MORRISON & FOERSTER LLP
425 MARKET STREET
SAN FRANCISCO, CA 94105-2482

UNITED STATES PATENT AND TRADEMARK OFFICE

Commissioner for Patents
United States Patent and Trademark Office
P.O. Box 1450
Alexandria, VA 22313-1450
www.uspto.gov

MORRISON & FOERSTER LLP
425 MARKET STREET
SAN FRANCISCO CA 94105-2482

MAILED

MAY 24 2010

OFFICE OF PETITIONS

In re Application of
Udi Manber, et al.
Application No. 10/686,255
Filed: October 14, 2003
Attorney Docket No. 017887-003610US

DECISION ON PETITION
TO WITHDRAW
FROM RECORD

This is a decision on the request to withdraw as attorney of record under 37 CFR § 1.36, filed March 19, 2010.

The request is **NOT APPROVED**.

The request cannot be approved because it lacks a forwarding correspondence address of the first named inventor or a properly intervening assignee.

If the forwarding correspondence address is to the assignee, the Office will only accept correspondence address changes to the most current address information provided for the assignee of the entire interest *that properly became of record under 37 CFR 3.71.* 37 CFR 3.71(c) states:

> *An assignee becomes of record either in a national patent application or a reexamination proceeding by filing a statement in compliance with § 3.73(b) that is signed by a party who is authorized to act on behalf of the assignee.*

The assignee must establish its ownership of the patent to the satisfaction of the Director. In this regard, the statement under 37 CFR 3.73(b) must have either: (i) documentary evidence of a chain of title from the original owner to the assignee (*e.g.*, copy of an executed assignment), and a statement affirming that the documentary evidence of the chain of title from the original owner to the assignee was or concurrently is being submitted for recordation pursuant to § 3.11; or (ii) a statement specifying where documentary evidence of a chain of title from the original owner to the assignee is recorded in the assignment records of the Office (*e.g.*, reel and frame number).

All future communications from the Office will continue to be directed to the above-listed address until otherwise notified by applicant.

Telephone inquires concerning this decision should be directed to the undersigned at (571) 272-2991.

Terri Johnson
Petitions Examiner
Office of Petitions

cc: **YAHOO! INC.**
701 FIRST AVENUE
SUNNYVALE, CA 94089

UNITED STATES PATENT AND TRADEMARK OFFICE

Commissioner for Patents
United States Patent and Trademark Office
P.O. Box 1450
Alexandria, VA 22313-1450
www.uspto.gov

Arthur G. Schaier
Carmody & Torrance LLP
50 Leavenworth Street
P.O. Box 1110
Waterbury CT 06721-1110

COPY MAILED

SEP 2 2 2004

OFFICE OF PETITIONS

In re Application of :
Contadini :
Application No. 10/686,312 :
Filed: October 15, 2003 : ON PETITION
Attorney Docket No. 24044-205B :
FOR: DEVICE WITH ONE OR MORE INDICATORS

This is a decision on the petition entitled, "PETITION UNDER 37 CFR 1.181 AND FEE AUTHORIZATION," filed July 23, 2004 (certificate of mailing date July 21, 2004). Petitioner requests (1) that a 5 month extension of time fee be waived because a January 13, 2004 Notice to File Missing Parts of Application, dated January 13, 2004, was not timely received at the correspondence address of record and (2) that Figure 3, allegedly omitted upon the filing of the application, be accorded a filing date of October 15, 2003. The petition will be treated under 37 CFR 1.182 for the request to waive the extension of time fee and under 37 CFR 1.53(e) for the request that Office acknowledge Figure 3 was filed on October 15, 2003 with the other application papers.

The petition under 37 CFR 1.182 is **GRANTED**.

The petition under 37 CFR 1.53(e) is **DISMISSED AS MOOT**.

A Notice to File Missing Parts of Nonprovisional Application was allegedly mailed on January 13, 2004. Petitioner asserts that this Notice was never received at the correspondence address of record and provides detailed statements from Paralegal Linda M. Freed and Secretary Florence S. Chamoures regarding the treatment of incoming USPTO mail. As evidenced by the mail logs covering January 14- 30, it is apparent that the January 13, 2004 Notice was not received at the correspondence address of record. While the docketing records have not been submitted, Ms. Freed explains that if an item is not on the mail log, then it would not be docketed. Ordinarily a docketing report is required to show non-receipt. However, in this instance, a review of USPTO PALM records shows no USPTO mailing entry for the January 13, 2004 Notice. This fact further bolsters petitioner's arguments of non-receipt. It appears that the January 13, 2004 Notice was generated, but never mailed.

Since petitioner did not receive the January 13, 2004 Notice until July 14, 2004, when petitioner took the initiative to check on the status of the case, it would not be equitable to charge petitioner a large extension of time fee. The petition under 37 CFR 1.182 is **GRANTED**.

The January 13, 2004 Notice states that Figure 3 described in the specification appears to have been omitted. Petitioner asserts that Figure 3 was filed on October 15, 2003. A review of petitioner's evidence is not required because an independent review of the application papers filed on October 15, 2003 reveals that Figure 3 is, in fact, present. The January 13, 2004 Notice was incorrect to allege Figure 3 was omitted upon the application's filing. The petition under 37 CFR 1.53(e) is **DISMISSED AS MOOT** because Figure 3 is present.

No petition fees should be charged in connection with this matter. Deposit account no. 50-0447 will be credited the $130.00 petition fee charged on July 26, 2004. Deposit account no. 50-0447 will be charged a $65.00 surcharge for the late filing of the executed declaration.

The application will be returned to the Office of Initial Patent Examination for further processing.

Telephone inquiries concerning this decision should be directed to the undersigned at (703) 308-6712. After September 27, 2004, please call (571) 272-3230.

E. Shirene Willis
Senior Petitions Attorney
Office of Petitions
Office of the Deputy Commissioner
for Patent Examination Policy

UNITED STATES PATENT AND TRADEMARK OFFICE

Commissioner for Patents
United States Patent and Trademark Office
P.O. Box 1450
Alexandria, VA 22313-1450
www.uspto.gov

ISIS PHARMACEUTICALS, INC.
1896 Rutherford Road
Carlbad, CA 92008

COPY MAILED

SEP 29 2006

OFFICE OF PETITIONS

In re Application of :
FREIER, et al. :
Application No. 10/686,317 : DECISION ON PETITION
Filed: October 15, 2003 : TO WITHDRAW
Attorney Docket No. IBIS0009-101(ISPH-0794) : FROM RECORD
:

This is a decision on the Request to Withdraw as attorney or agent of record under 37 C.F.R. § 1.36(b), filed July 05, 2006.

The request is **NOT APPROVED**.

A grantable request to withdraw as attorney/agent of record must be signed by every attorney/agent seeking to withdraw or contain a clear indication that one attorney is signing on behalf of another/others. A request to withdraw will not be approved unless at least 30 (thirty) days would remain between the date of approval and the later of the expiration date of a time to file a response or the expiration date of the maximum time period which can be extended under 37 C.F.R. § 1.136(a).

The Office cannot approve the request at this time since the reasons provided do not meet any of the conditions under the mandatory or permissive categories enumerated in 37 CFR 10.40. Section 10.40 of Title 37 of the Code of Federal Regulation states, "[a] practitioner shall not withdraw from employment in a proceeding before the Office without permission from the Office[.]" More specifically, 37 CFR 10.40 states, "[i]f paragraph (b) of this section is not applicable, a practitioner may not request permission to withdraw in matter pending before the Office unless such request or such withdrawal is" for one the permissive reasons listed in 37 CFR 10.40(c). While the reasons may be provided by referencing a specific portion of 37 CFR 10.40, the reasons must deal with actions by the client. The reasons set forth in the request, "File transferred to another firm," are not appropriate since it is not clear that the client initiated the transfer, or that the client knowingly or freely assents to the transfer to new counsel.

All future communications from the Office will continue to be directed to the above-listed address until otherwise notified by applicant.

Telephone inquiries concerning this decision should be directed to Patricia Volpe at 571-272-6825.

for David Bucci
Petitions Examiner
Office of Petitions

cc: KNOBBE, MARTENS, OLSON & BEAR, LLP
2040 Main Street
Fourteenth Floor
Irvine, CA 92614

UNITED STATES PATENT AND TRADEMARK OFFICE

UNITED STATES DEPARTMENT OF COMMERCE
United States Patent and Trademark Office
Address: COMMISSIONER FOR PATENTS
P.O. Box 1450
Alexandria, Virginia 22313-1450
www.uspto.gov

APPLICATION NO.	FILING DATE	FIRST NAMED INVENTOR	ATTORNEY DOCKET NO.	CONFIRMATION NO.
10/686,322	10/14/2003	Gilbert Chu	STAN-277	7388

77974 7590 08/19/2008

Bozicevic, Field & Francis LLP
Stanford University Office of Technology Licensing
1900 University Avenue
Suite 200
East Palo Alto, CA 94303

EXAMINER	
CALAMITA, HEATHER	

ART UNIT	PAPER NUMBER
1637	

MAIL DATE	DELIVERY MODE
08/19/2008	PAPER

Please find below and/or attached an Office communication concerning this application or proceeding.

The time period for reply, if any, is set in the attached communication.

UNITED STATES PATENT AND TRADEMARK OFFICE

Commissioner for Patents
United States Patent and Trademark Office
P.O. Box 1450
Alexandria, VA 22313-1450
www.uspto.gov

Pamela J. Sherwood, Ph.D.
BOZICEVIC, FIELD & FRANCIS, LLP
1900 University Avenue, Suite 200
East Palo Alto, CA 94303

AUG 19 2008

In re Application of	:
Chu	:Decision on Petition
Serial No.: 10/686,322	:
Filed : 14 October 2003	:
Attorney Docket No.: STAN-277	:

This letter is in response to the Petition filed on 3 December 2007 to request review of the restriction requirement.

BACKGROUND

This application was filed under 35 USC 111(a) and as such is eligible for US restriction practice under 35 USC 121 and chapter 800 of the MPEP.

On 16 May 2006, the examiner placed claims 1-46 into three groups for restriction and also required election of a single sequence for any of the three groups elected.

On 16 June 2006, applicants elected Group I primary cells without traverse. Applicants traversed the requirement to elect a single sequence. Concurrent with the election, applicant amended their claims from requiring "any gene" to requiring "at least 10 sequences."

On 28 February 2007, the examiner mailed out a letter requesting an election of a single sequence. Applicants elected Cyclin B and the ten top ranked sequences in Table 3 with traverse, as follows:

> Should the Examiner require an election of ten sequences, Applicants elect the ten top-ranked sequences as set forth in Table 3: Cyclin B; ATP synthase, H+ transporting, mitochondrial F1 complex, delta subunit; CDC28 protein kinase 2; formin-binding protein 17; ribosomal protein S9; phorbolin-like protein MDS019; tumor necrosis factor (ligand) superfamily, member 7; RNA helicase; disrupter of silencing 10; and heat shock 27kD protein 1.

On 1 June 2007, the examiner considered the traversal and made the restriction requirement final. Claims 1-6, 9-12, 17-18 and 21-33 were under examination. Claims 8, 14 and 20 were

withdrawn from examination. Claims 1-6, 10-12 and 26-30 were rejected under 35 USC 102(b). Claim 15, 17-18 and 22-25, 31-33 were rejected under 35 USC 103(a).

This petition was filed on 3 December 2007, along with an amendment to the claims and a response to the Office action.

DISCUSSION

This file history and petition have been carefully considered.

The petition requests that the restriction requirement to elect a single sequence be withdrawn.

It is noted that the original restriction requirement was written in reference to the original claims that read upon any (one) gene. In contrast, the second restriction requirement, the first Office action on the merits and this decision should have and now must address (1) the amended claims which require at least 10 sequences and (2) the election of the ten top ranked sequences from Table 3.

The change from a single subcombination to a combination of 10 elements may be considered as shift in invention. MPEP 819 states:

> The general policy of the Office is not to permit the applicant to shift to claiming another invention after an election is once made and action given on the elected subject matter.

However, because the amendment to the claims and election was presented prior to the first Office action on the merits, in an effort to expedite prosecution in this particular application, the petition decision will address currently pending claims along with the election of ten sequences.

The petition also states: "all of the sequences recited in the present application are publicly available and known in the prior art." However, the claims are not directed to the sequences, but to method of using the sequences. If applicant is attempting to state that the methods of using any combination of the sequences would be obvious one over the other, it is noted that applicant should submit evidence or identify such evidence now of record showing the inventions or species to be obvious variants or clearly admit on the record that this is the case. In either instance, if the examiner finds one of the inventions unpatentable over the prior art, the evidence or admission may be used in a rejection under 35 U.S.C.103(a) of the other invention.

DECISION

For these reasons, the petition is **GRANTED.**

The restriction requirement to elect a single sequence has been withdrawn.

The election of the combination of top ten ranked sequences shown in Table 3 is acknowledged:

> Should the Examiner require an election of ten sequences, Applicants elect the ten top-ranked sequences as set forth in Table 3: Cyclin B; ATP synthase, H+ transporting, mitochondrial F1 complex, delta subunit; CDC28 protein kinase 2; formin-binding protein 17; ribosomal protein S9; phorbolin-like protein MDS019; tumor necrosis factor (ligand) superfamily, member 7; RNA helicase; disrupter of silencing 10; and heat shock 27kD protein 1.

The application will be forwarded to the examiner for consideration of the papers filed 3 December 2007 and preparation of an Office action consistent with this decision.

Should there be any questions regarding this decision, please Quality Assurance Specialist/Program Manager Julie Burke, by mail addressed to Director, Technology Center 1600, PO BOX 1450, ALEXANDRIA, VA 22313-1450, or by telephone at (571) 272-1600 or by Official Fax at 571-273-8300.

George C. Elliott

George Elliott
Director, Technology Center 1600

UNITED STATES DEPARTMENT OF COMMERCE
Patent and Trademark Office
ASSISTANT SECRETARY OF COMMERCE AND
COMMISSIONER OF PATENTS AND TRADEMARKS
Washington, D.C. 20231

Date: 9-19-07

Patent No.: 7,013,226 B2
Inventor: Chunnming Han, et. al.
Issued: March 14, 2006
For: REFLECTOMETER WITH EHO CANCELLER

Re: Request for Certificate of Correction

Consideration has been given your request for the issuance of a certificate of correction in the above-identified patent.

Title page, item [54] and col. 1 lines 1-2, it is the practice to excluce words such as "Improvements in", "A", "Novel", "New", "Improved, etc., from the printed patent.

In view of the foregoing, your request is hereby denied.

Eva James
For Cecelia Newman
Decisions & Certificates
of Correction Branch
(703) 308-9390 ext.124 or 105

Kacvinsky LLC
%Intellevate
P.O. Box 52050Minneapolis MN 55402

ej

UNITED STATES PATENT AND TRADEMARK OFFICE

Commissioner for Patents
United States Patent and Trademark Office
P. O. Box 1450
Alexandria, VA 22313-1450
www. uspto. gov

PFIZER INC.
PATENT DEPARTMENT, MS8260-1611
EASTERN POINT ROAD
GROTON, CT 06340

COPY MAILED

AUG 15 2008

In re Application of :
Graham Nigel Maw et al :
Application No. 10/686,349 : ON PETITION
Filed: October 15, 2003 :
Attorney Docket No. PC10343C :

This is a decision on the petition under 37 CFR 1.137(b), filed October 18, 2007 to revive the above-identified application.

The petition is **GRANTED.**

The application became abandoned for failure to reply in a timely manner to the Restriction Requirement mailed January 18, 2007 which set a shortened statutory period for reply of one (1) month or thirty (30) days (whichever is later). No extensions of time under the provisions of 37 CFR 1.136(a) were obtained. Accordingly, the application became abandoned on February 19, 2007.

Telephone inquiries concerning this decision should be directed to Irvin Dingle at (571) 272-3210.

This matter is being referred to Technology Center AU 1617 for further processing.

Irvin Dingle
Petitions Examiner
Office of Petitions

UNITED STATES PATENT AND TRADEMARK OFFICE

Commissioner for Patents
United States Patent and Trademark Office
P.O. Box 1450
Alexandria, VA 22313-1450
www.uspto.gov

CARDINAL HEALTH
7000 CARDINAL PLACE
LEGAL DEPARTMENT - INTELLECTUAL PROPERTY
DUBLIN OH 43017

COPY MAILED

DEC 0 5 2008

OFFICE OF PETITIONS

In re Application of :
Kelly L. MORRISON et al. :
Application No. 10/686,385 : DECISION ON PETITION
Filed: October 14, 2003 :
Attorney Docket No. OWE5006-US :

This is a decision on the petition under the unintentional provisions of 37 CFR 1.137(b), filed October 03, 2008, to revive the above-identified application.

The petition is **GRANTED**.

The application became abandoned for failure to reply in a timely manner to the non-final Office action mailed, January 10, 2008, which set a shortened statutory period for reply of three (3) months. No extensions of time under the provisions of 37 CFR 1.136(a) were obtained. Accordingly, the application became abandoned on April 11, 2008.

The petition satisfies the requirements of 37 CFR 1.137(b) in that petitioner has supplied (1) the reply in the form of an amendment, (2) the petition fee of $1620, and (3) an adequate statement of unintentional delay.

37 CFR 1.137(b)(3) requires a statement that "the entire delay in filing the required reply from the due date for the reply until the filing of a grantable petition pursuant to 37 CFR 1.137(b) was unintentional." Since the statement appearing in the petition varies from the language required by 37 CFR 1.137(b)(3), the statement is being construed as the required statement. Petitioner must notify the Office if this is **not** a correct reading of the statement appearing in the petition.

It is not apparent whether the person signing the statement of unintentional delay was in a position to have firsthand or direct knowledge of the facts and circumstances of the delay at issue. Nevertheless, such statement is being treated as having been made as the result of a reasonable inquiry into the facts and circumstances of such delay. See 37 CFR 10.18(b) and Changes to Patent Practice and Procedure; Final Rule Notice, 62 Fed. Reg. 53131, 53178 (October 10, 1997), 1203 Off. Gaz. Pat. Office 63, 103 (October 21, 1997). In the event that such an inquiry has not been made, petitioner must make such an inquiry. If such inquiry results in the discovery that it is not correct that the entire delay in filing the required reply from the due

date for the reply until the filing of a grantable petition pursuant to 37 CFR 1.137(b) was unintentional, petitioner must notify the Office.

There is no indication that the person signing the petition was ever given a power of attorney to prosecute the application. If the person signing the petition desires to receive future correspondence regarding this application, the appropriate power of attorney document must be submitted. While a courtesy copy of this decision is being mailed to the person signing the petition, all future correspondence will be directed to the address currently of record until appropriate instructions are received.

An extension of time under 37 CFR 1.136 must be filed prior to the expiration of the maximum extendable period for reply. See In re Application of S., 8 USPQ2d 1630, 1631 (Comm'r Pats. 1988). Since the $ 1110 three (3) month extension of time fee submitted with the petition on October 03, 2008 was subsequent to the maximum extendable period for reply, this fee is unnecessary and will be credited to petitioner's deposit account.

Telephone inquiries concerning this decision should be directed to K. Reichle at (571) 272-6051.

This application is being referred to Technology Center AU 3626 for appropriate action by the Examiner in the normal course of business on the reply received.

/David Bucci/
Petitions Examiner
Office of Petitions

Cc: John A. Hankins
McDERMOTT WILL & EMERY LLP
4370 La Jolla Village Drive, Suite 700
San Diego, CA 92122

UNITED STATES PATENT AND TRADEMARK OFFICE

Commissioner for Patents
United States Patent and Trademark Office
P.O. Box 1450
Alexandria, VA 22313-1450
www.uspto.gov

GREGORY J. LAVORGNA
DRINKER BIDDLE & REATH LLP
ONE LOGAN SQUARE
18TH AND CHERRY STREETS
PHILADELPHIA, PA 19103-6996

COPY MAILED

AUG 0 9 2005

OFFICE OF PETITIONS

In re Application of :
Jason O. Adams et al :
Application No. 10/686,387 : DECISION GRANTING PETITION
Filed: October 14, 2003 : UNDER 37 CFR 1.313(c)(2)
Attorney Docket No. 6232-248 (190363) :

This is a decision on the petition, filed August 5, 2005, under 37 CFR 1.313(c)(2) to withdraw the above-identified application from issue after payment of the issue fee.

The petition is **GRANTED**.

The above-identified application is withdrawn from issue for consideration of a submission under 37 CFR 1.114 (request for continued examination). See 37 CFR 1.313(c)(2).

Petitioner is advised that the issue fee paid on May 20, 2005 in the above-identified application cannot be refunded. If, however, the above-identified application is again allowed, petitioner may request that it be applied towards the issue fee required by the new Notice of Allowance.[1]

Telephone inquiries should be directed to the undersigned at (571) 272-3218.

This matter is being referred to Technology Center AU 2832 for processing of the request for continued examination under 37 CFR 1.114 and for consideration of the Information Disclosure Statement.

Frances Hicks
Petitions Examiner
Office of Petitions

---

[1] *The request to apply the issue fee to the new Notice may be satisfied by completing and returning the new Issue Fee Transmittal Form PTOL-85(b), which includes the following language thereon: "Commissioner for Patents is requested to apply the Issue Fee and Publication Fee (if any) or re-apply any previously paid issue fee to the application identified above." Petitioner is advised that, whether a fee is indicated as being due or not, the Issue Fee Transmittal Form* ***must*** *be completed and timely submitted to avoid abandonment. Note the language in bold text on the first page of the Notice of Allowance and Fee(s) Due (PTOL-85).*

SPE RESPONSE FOR CERTIFICATE OF CORRECTION

Paper No.: 20070530

DATE : 05/22/07

TO SPE OF : ART UNIT 2857

SUBJECT : Request for Certificate of Correction for Appl. No.: **10/686388** Patent No.: **6957175**

Please respond to this request for a certificate of correction within 7 days.

Please review the requested changes/corrections as shown in the **COCIN** document(s) in the IFW application image. No new matter should be introduced, nor should the scope or meaning of the claims be changed.

Please complete the response (see below) and forward the completed response to scanning using document code **COCX**.

Angela Green
Certificates of Correction Branch
703.308.9380 ext. 123

Thank You For Your Assistance

The request for issuing the above-identified correction(s) is hereby:
Note your decision on the appropriate box.

- ☒ **Approved** — All changes apply.
- ☐ **Approved in Part** — Specify below which changes **do not** apply.
- ☐ **Denied** — State the reasons for denial below.

Comments: _____

5/30/07

ELISEO RAMOS-FELICIANO
SUPERVISORY PATENT EXAMINER
SPE

2857
Art Unit

UNITED STATES PATENT AND TRADEMARK OFFICE

Commissioner for Patents
United States Patent and Trademark Office
P.O. Box 1450
Alexandria, VA 22313-1450
www.uspto.gov

BAKER & BOTTS
30 ROCKEFELLER PLAZA
NEW YORK, NY 10112

COPY MAILED

AUG 29 2005

OFFICE OF PETITIONS

In re Application of :
Robert M. Sands, et al. :
Application No. 10/686,397 : ON PETITION
Filed: October 14, 2003 :
Attorney Docket No. A36038-072861.0121 :

This is a decision on the petition under 37 CFR 1.137(b), filed April 11, 2005, to revive the above-identified application.

The petition is **GRANTED.**

The above-identified application became abandoned for failure to reply in a timely manner to the non-final Office action mailed September 29, 2004, which set a shortened statutory period for reply of three (3) months. No extensions of time under the provisions of 37 CFR 1.136(a) were obtained. Accordingly, the application became abandoned on December 30, 2004.

The petition satisfies the requirement of 37 CFR 1.137 (b) in that petitioner has supplied (1) the reply in the form of an Amendment; (2) the petition fee of $750; and (3) the required statement of unintentional delay have been received. Accordingly, the petition filed April 11, 2005 is accepted as having been unintentionally delayed.

Telephone inquiries concerning this decision should be directed to the undersigned at (571) 272-3229.

The application matter is being referred to Technology Center 1700, Art Unit 1755 for further processing.

Retta Williams

Retta Williams
Petitions Examiner
Office of Petitions
Office of the Deputy Commissioner
for Patent Examination Policy

UNITED STATES PATENT AND TRADEMARK OFFICE

Commissioner for Patents
United States Patent and Trademark Office
P.O. Box 1450
Alexandria, VA 22313-1450
www.uspto.gov

THOMAS F. LENIHAN
TEKTRONIX, INC.
14150 S. W. KARL BRAUN DRIVE
P.O. BOX 500 (50-LAW)
BEAVERTON OR 97077-0001

In re Application of	:	
Pickerd et al.	:	
Application No. 10/686412	:	ON PETITION
Filing or 371(c) Date: 10/14/2003	:	
Attorney Docket Number: 7464-US	:	

This is a decision on the Petition for Revival of an Application for Patent Abandoned Unintentionally Under 37 C.F.R. § 1.137(b), filed April 9, 2007.

This Petition is hereby **granted**.

The above-identified application became abandoned for failure to timely and properly reply to the Notice of Allowance and Issue Fee Due, mailed December 8, 2006. The Notice set a non-extendable three (3) month period for reply. No reply having been received, the application became abandoned on March 9, 2007. A Notice of Abandonment was mailed April 5, 2007.

The petition satisfies the requirements of 37 CFR 1.137(b) in that petitioner has supplied (1) the reply in the form of payment of the issue fee and the publication fee; (2) the petition fee; and (3) a statement of unintentional delay[1].

This application is being referred to Publishing Division for processing into a patent.

Telephone inquiries concerning this decision should be directed to the undersigned at (571) 272-3232.

Derek L. Woods
Attorney
Office of Petitions

[1] 37 CFR 1.137(b)(3) requires a statement that "the entire delay in filing the required reply from the due date for the reply until the filing of a grantable petition pursuant to 37 CFR 1.137(b) was unintentional." Since the statement appearing in the petition varies from the language required by 37 CFR 1.137(b)(3), the statement is being construed as the required statement. Petitioner must notify the Office if this is **not** a correct reading of the statement appearing in the petition.

UNITED STATES PATENT AND TRADEMARK OFFICE

Commissioner for Patents
United States Patent and Trademark Office
P.O. Box 1450
Alexandria, VA 22313-1450
www.uspto.gov

THOMAS F. LENIHAN
TEKTRONIX, INC.
14150 S. W. KARL BRAUN DRIVE
P.O. BOX 500 (50-LAW)
BEAVERTON OR 97077-0001

COPY MAILED

JUN 29 2007

OFFICE OF PETITIONS

In re Application of
Pickerd et al.
Application No. 10/686412
Filing or 371(c) Date: 10/14/2003
Attorney Docket Number: 7464-US

ON PETITION

This is a decision on the Petition for Revival of an Application for Patent Abandoned Unintentionally Under 37 C.F.R. § 1.137(b), filed April 9, 2007.

This Petition is hereby **granted**.

The above-identified application became abandoned for failure to timely and properly reply to the Notice of Allowance and Issue Fee Due, mailed December 8, 2006. The Notice set a non-extendable three (3) month period for reply. No reply having been received, the application became abandoned on March 9, 2007. A Notice of Abandonment was mailed April 5, 2007.

The petition satisfies the requirements of 37 CFR 1.137(b) in that petitioner has supplied (1) the reply in the form of payment of the issue fee and the publication fee; (2) the petition fee; and (3) a statement of unintentional delay[1].

This application is being referred to Publishing Division for processing into a patent.

Telephone inquiries concerning this decision should be directed to the undersigned at (571) 272-3232.

Derek L. Woods
Attorney
Office of Petitions

[1] 37 CFR 1.137(b)(3) requires a statement that "the entire delay in filing the required reply from the due date for the reply until the filing of a grantable petition pursuant to 37 CFR 1.137(b) was unintentional." Since the statement appearing in the petition varies from the language required by 37 CFR 1.137(b)(3), the statement is being construed as the required statement. Petitioner must notify the Office if this is **not** a correct reading of the statement appearing in the petition.

UNITED STATES PATENT AND TRADEMARK OFFICE

COMMISSIONER FOR PATENTS
UNITED STATES PATENT AND TRADEMARK OFFICE
P.O. BOX 1450
ALEXANDRIA, VA 22313-1450
www.uspto.gov

STEPHEN B. MAEBIUS
FOLEY AND LARDNER
SUITE 500
3000 K STREET NW
WASHINGTON DC 20007

In re Application of :
Serengulkam V. Govindam et al :
Serial No.: 10/686,436 : WITHDRAWAL OF ATTORNEY
Filed: October 16, 2003 :
Attorney Docket No.: 018733-1292 :

This is in response to applicants' attorneys' request, filed February 26, 2004, to withdraw from representation in the above identified application.

37 CFR 10.40 Withdrawal from employment.
(b) Mandatory withdrawal . A practitioner representing a client before the Office shall withdraw from employment if:
(1) The practitioner knows or it is obvious that the client is bringing a legal action, commencing a proceeding before the Office, conducting a defense, or asserting a position in litigation or any proceeding pending before the Office, or is otherwise having steps taken for the client, merely for the purpose of harassing or maliciously injuring any person;
(2) The practitioner knows or it is obvious that the practitioner's continued employment will result in violation of a Disciplinary Rule;
(3) The practitioner's mental or physical condition renders it unreasonably difficult for the practitioner to carry out the employment effectively; or
(4) The practitioner is discharged by the client.
(c) Permissive withdrawal. If paragraph (b) of this section is not applicable, a practitioner may not request permission to withdraw in matters pending before the Office unless such request or such withdrawal is because:
(1) The petitioner's client:
(i) Insists upon presenting a claim or defense that is not warranted under existing law and cannot be supported by good faith argument for an extension, modification, or reversal of existing law;
(ii) Personally seeks to pursue an illegal course of conduct;
(iii) Insists that the practitioner pursue a course of conduct that is illegal or that is prohibited under a Disciplinary Rule;
(iv) By other conduct renders it unreasonably difficult for the practitioner to carry out the employment effectively;
(v) Insists, in a matter not pending before a tribunal, that the practitioner engage in conduct that is contrary to the judgment and advice of the practitioner but not prohibited under the Disciplinary Rule; or
(vi) Has failed to pay one or more bills rendered by the practitioner for an unreasonable period of time or has failed to honor an agreement to pay a retainer in advance of the performance of legal services.
(2) The practitioner's continued employment is likely to result in a violation of a Disciplinary Rule;
(3) The practitioner's inability to work with co-counsel indicates that the best interests of the client likely will be served by withdrawal;
(4) The practitioner's mental or physical condition renders it difficult for the practitioner to carry out the employment effectively;
(5) The practitioner's client knowingly and freely assents to termination of the employment; or

(6) The practitioner believes in good faith, in a proceeding pending before the Office, that the Office will find the existence of other good cause for withdrawal.

Applicants' attorney has provided no reason for withdrawal, as required.

The request to withdraw is **DISMISSED**.

Should there be any questions with regard to this letter please contact William R. Dixon, Jr. by letter addressed to the Director, Technology Center 1600, PO BOX 1450, ALEXANDRIA, VA 22313-1450, or by telephone at 571-272-0519 or by facsimile transmission at Office facsimile number.

William R. Dixon, Jr.
Special Program Examiner
Technology Center 1600

UNITED STATES PATENT AND TRADEMARK OFFICE

Commissioner for Patents
United States Patent and Trademark Office
P.O. Box 1450
Alexandria, VA 22313-1450
www.uspto.gov

JUL 13 2005

In re Application of :
Susan Carol et al. : DECISION ON PETITION
Serial No. 10/686,449 :
Filed: October 15, 2003 :
For: COLORANT PACKETS AND METHODS: RELATING THERETO :

This is a decision on the petition to make special filed on May 25, 2004. The petition is submitted pursuant to the practice established in MPEP § 708.02(II) "Infringement." The $130.00 petition fee has been received.

The petition is granted.

A review of the petition shows that petitioners have satisfied all of the requirements of the above-cited MPEP section. Accordingly, the examiner will treat this application as special throughout its prosecution. Prior to the first action on the merits, the examiner will conduct a rigorous search for potentially interfering applications. The interference search will be brought up to date prior to each successive action.

The Supervisory Patent Examiner of Patent Examining Art Unit 3727 will be notified of this decision, and will inform the assigned examiner to take action not inconsistent with this decision.

PETITION GRANTED.

Richard A. Bertsch, Director
Technology Center 3700

Glenn M. Seager
Crompton, Seager & Tufte, LLC
1221 Nicollet Avenue, Suite 800
Minneapolis, MN 55403-2420

UNITED STATES PATENT AND TRADEMARK OFFICE

Commissioner for Patents
United States Patent and Trademark Office
P.O. Box 1450
Alexandria, VA 22313-1450
www.uspto.gov

COPY MAILED

AUG 23 2007

OFFICE OF PETITIONS

MORRISON & FOERSTER LLP
755 PAGE MILL RD
PALO ALTO, CA 94304-1018

In re Application of
KURN, Nurith
Application No. 10/686,466
Filed: October 14, 2003
Attorney Docket No. **492692000610**

DECISION ON PETITION
TO WITHDRAW
FROM RECORD

This is a decision on the Request to Withdraw as attorney or agent of record under 37 C.F.R. § 1.36(b), filed July 11, 2007.

The request is **NOT APPROVED** as moot.

A review of the file record indicates that the power of attorney to Morrison & Foerster LLP has been revoked by the assignee of the patent application on August 06, 2007. Accordingly, the request to withdraw under 37 C.F.R. § 1.36(b) is moot.

All future communications from the Office will continue to be directed to the below-listed address until otherwise notified by applicant.

Telephone inquires concerning this decision should be directed to Michelle R. Eason at 571-272-4231.

Terri Williams
Petitions Examiner
Office of Petitions

cc: **WILSON SONSINI GOODRICH & ROSATI**
650 PAGE MILL ROAD
PALO ALTO, CA 94304-1050

UNITED STATES PATENT AND TRADEMARK OFFICE

Commissioner for Patents
United States Patent and Trademark Office
P.O. Box 1450
Alexandria, VA 22313-1450
www.uspto.gov

GOTTLIEB RACKMAN & REISMAN PC
270 MADISON AVENUE
8TH FLOOR
NEW YORK, NY 10016-0601

COPY MAILED

JAN 0 4 2005

OFFICE OF PETITIONS

In re Application of :
Michelle Jillian Fuwausa et al :
Application No. 10/686,467 : ON PETITION
Filed: October 14, 2003 :
Attorney Docket No. 3715-016 DIV1 :

This is a decision on the petition under 37 CFR 1.137(b), filed November 24, 2004, to revive the above-identified application.

The petition is **GRANTED**.

The above-identified application became abandoned for failure to reply in a timely manner to the non-final Office action mailed April 6, 2004, which set a shortened statutory period for reply of three (3) months. No extensions of time under the provisions of 37 CFR 1.136(a) were obtained. Accordingly, the above-identified application became abandoned on July 7, 2004.

Telephone inquiries concerning this decision should be directed to Wan Laymon at (571) 272-3220.

This matter is being referred to Technology Center AU 2875.

Wan Laymon
Petitions Examiner
Office of Petitions
Office of the Deputy Commissioner
for Patent Examination Policy

UNITED STATES PATENT AND TRADEMARK OFFICE

UNITED STATES DEPARTMENT OF COMMERCE
United States Patent and Trademark Office
Address: COMMISSIONER FOR PATENTS
P.O. Box 1450
Alexandria, Virginia 22313-1450
www.uspto.gov

APPL NO.	FILING OR 371 (c) DATE	ART UNIT	FIL FEE REC'D	ATTY.DOCKET NO	DRAWINGS	TOT CLMS	IND CLMS
10/686,478	10/15/2003	1616	900	M 6487A CC/SPAP		18	2

CONFIRMATION NO. 8048

CORRECTED FILING RECEIPT

OC000000012581468

23657
COGNIS CORPORATION
PATENT DEPARTMENT
300 BROOKSIDE AVENUE
AMBLER, PA 19002

Date Mailed: 05/10/2004

Receipt is acknowledged of this regular Patent Application. It will be considered in its order and you will be notified as to the results of the examination. Be sure to provide the U.S. APPLICATION NUMBER, FILING DATE, NAME OF APPLICANT, and TITLE OF INVENTION when inquiring about this application. Fees transmitted by check or draft are subject to collection. Please verify the accuracy of the data presented on this receipt. **If an error is noted on this Filing Receipt, please write to the Office of Initial Patent Examination's Filing Receipt Corrections, facsimile number 703-746-9195. Please provide a copy of this Filing Receipt with the changes noted thereon. If you received a "Notice to File Missing Parts" for this application, please submit any corrections to this Filing Receipt with your reply to the Notice. When the USPTO processes the reply to the Notice, the USPTO will generate another Filing Receipt incorporating the requested corrections (if appropriate).**

Applicant(s)

Gary J. Dee, Gulph Mills, PA;
Norman Milstein, Cincinnati, OH;
Barry A. Salka, Fair Lawn, NJ;
Judy Zhuang, Blue Bell, PA;
Stefan Bruening, Philadelphia, PA;

Domestic Priority data as claimed by applicant

This application is a CIP of 10/393,149 03/20/2003
which claims benefit of 60/373,973 04/19/2002

Foreign Applications

If Required, Foreign Filing License Granted: 01/14/2004

Projected Publication Date: 08/19/2004

Non-Publication Request: No

Early Publication Request: No

Title

Vegetable substitute for lanolin

Preliminary Class

424

LICENSE FOR FOREIGN FILING UNDER
Title 35, United States Code, Section 184
Title 37, Code of Federal Regulations, 5.11 & 5.15

GRANTED

The applicant has been granted a license under 35 U.S.C. 184, if the phrase "IF REQUIRED, FOREIGN FILING LICENSE GRANTED" followed by a date appears on this form. Such licenses are issued in all applications where the conditions for issuance of a license have been met, regardless of whether or not a license may be required as set forth in 37 CFR 5.15. The scope and limitations of this license are set forth in 37 CFR 5.15(a) unless an earlier license has been issued under 37 CFR 5.15(b). The license is subject to revocation upon written notification. The date indicated is the effective date of the license, unless an earlier license of similar scope has been granted under 37 CFR 5.13 or 5.14.

This license is to be retained by the licensee and may be used at any time on or after the effective date thereof unless it is revoked. This license is automatically transferred to any related applications(s) filed under 37 CFR 1.53(d). This license is not retroactive.

The grant of a license does not in any way lessen the responsibility of a licensee for the security of the subject matter as imposed by any Government contract or the provisions of existing laws relating to espionage and the national security or the export of technical data. Licensees should apprise themselves of current regulations especially with respect to certain countries, of other agencies, particularly the Office of Defense Trade Controls, Department of State (with respect to Arms, Munitions and Implements of War (22 CFR 121-128)); the Office of Export Administration, Department of Commerce (15 CFR 370.10 (j)); the Office of Foreign Assets Control, Department of Treasury (31 CFR Parts 500+) and the Department of Energy.

NOT GRANTED

No license under 35 U.S.C. 184 has been granted at this time, if the phrase "IF REQUIRED, FOREIGN FILING LICENSE GRANTED" DOES NOT appear on this form. Applicant may still petition for a license under 37 CFR 5.12, if a license is desired before the expiration of 6 months from the filing date of the application. If 6 months has lapsed from the filing date of this application and the licensee has not received any indication of a secrecy order under 35 U.S.C. 181, the licensee may foreign file the application pursuant to 37 CFR 5.15(b).

UNITED STATES PATENT AND TRADEMARK OFFICE

Commissioner for Patents
United States Patent and Trademark Office
P.O. Box 1450
Alexandria, VA 22313-1450
www.uspto.gov

PATTERSON & SHERIDAN, LLP
3040 POST OAK BOULEVARD, SUITE 1500
HOUSTON TX 77056

COPY MAILED

MAY 15 2007

OFFICE OF PETITIONS

In re Application of
Cheung et al.
Application No. 10/686,486
Filed: October 15, 2003
Attorney Docket No.
AMAT/3421.C2/PPC/ECP/CKIM

: DECISION ON PETITION
: UNDER 37 CFR 1.78(a)(3)

This is a decision on the petition under 37 CFR 1.78(a)(3), filed July 26, 2006, to accept an unintentionally delayed claim under 35 U.S.C. § 120 for the benefit of priority to prior-filed non-provisional Application No. 09/263,126, filed March 5, 1999, as set forth in the amendment filed with the petition.

The petition is **DISMISSED**.

A petition for acceptance of a claim for late priority under 37 CFR 1.78(a)(3) is only applicable to those applications filed on or after November 29, 2000. Further, the petition is appropriate only after the expiration of the period specified in 37 CFR 1.78(a)(2)(ii). In addition, the petition under 37 CFR 1.78(a)(3) must be accompanied by:

(1) the reference required by 35 U.S.C. § 120 and 37 CFR 1.78(a)(2)(i) of the prior-filed application, unless previously submitted;
(2) the surcharge set forth in § 1.17(t); and
(3) a statement that the entire delay between the date the claim was due under 37 CFR 1.78(a)(2)(ii) and the date the claim was filed was unintentional. The Director may require additional information where there is a question whether the delay was unintentional.

The petition does not satisfy item (1) above.

The reference to add the above-noted, prior-filed application in the first sentence of the specification on page one following the title is not acceptable as drafted since it improperly incorporates by reference the prior-filed application. An incorporation by reference statement

added after an application's filing date is not effective because no new matter can be added to an application after its filing date (*see* 35 U.S.C. § 132(a)). If an incorporation by reference statement is included in an amendment to the specification to add a benefit claim under 35 U.S.C. § 120 after the filing date of the application, the amendment would not be proper. When a benefit claim under 35 U.S.C. § 120 is submitted after the filing of an application, the reference to the prior application cannot include an incorporation by reference statement of the prior application. *See* Dart Industries v. Banner, 636 F.2d 684, 207 USPQ 273 (C.A.D.C. 1980). *Note* MPEP §§ 201.06(c) and 608.04(b).

If reconsideration of this decision is desired, a renewed petition under 37 CFR § 1.78(a)(3) and a substitute amendment, deleting the incorporation by reference statement, are required.

Further correspondence with respect to this matter should be addressed as follows:

By mail:
Mail Stop PETITIONS
Commissioner for Patents
Post Office Box 1450
Alexandria, VA 22313-1450

By hand:
Customer Service Window
Mail Stop Petitions
Randolph Building
401 Dulany Street
Alexandria, VA 22314

By fax:
(571) 273-8300
ATTN: Office of Petitions

Any questions concerning this matter may be directed to the undersigned at (571) 272-3206.

Liana Walsh
Petitions Examiner
Office of Petitions

UNITED STATES PATENT AND TRADEMARK OFFICE

Commissioner for Patents
United States Patent and Trademark Office
P.O. Box 1450
Alexandria, VA 22313-1450
www.uspto.gov

PATTERSON & SHERIDAN, LLP
3040 POST OAK BOULEVARD, SUITE 1500
HOUSTON TX 77056

COPY MAILED

MAY 3 1 2007

OFFICE OF PETITIONS

In re Application of
Cheung et al.
Application No. 10/686,486
Filed: October 15, 2003
Attorney Docket No.
APPM/003421.C2/PPC/ECP/CKIM

: DECISION GRANTING PETITION
: UNDER 37 CFR 1.78(a)(3)

CORRECTED DECISION

This is a decision on the petition under 37 CFR 1.78(a)(3), filed July 26, 2006, to accept an unintentionally delayed claim under 35 U.S.C. § 120 for the benefit of priority to the prior-filed nonprovisional applications set forth in the amendment filed concurrently with the instant petition and November 1, 2006.

The petition is **GRANTED**.

A petition for acceptance of a claim for late priority under 37 CFR 1.78(a)(3) is only applicable to those applications filed on or after November 29, 2000. Further, the petition is appropriate only after the expiration of the period specified in 37 CFR 1.78(a)(2)(ii). In addition, the petition under 37 CFR 1.78(a)(3) must be accompanied by:

(1) the reference required by 35 U.S.C. § 120 and 37 CFR 1.78(a)(2)(i) of the prior-filed application, unless previously submitted;
(2) the surcharge set forth in § 1.17(t); and
(3) a statement that the entire delay between the date the claim was due under 37 CFR 1.78(a)(2)(ii) and the date the claim was filed was unintentional. The Commissioner may require additional information where there is a question whether the delay was unintentional.

The instant nonprovisional application was filed after November 29, 2000, and the claim herein for the benefit of priority to the prior-filed provisional application is submitted after expiration of the period specified by 37 CFR 1.78(a)(2)(ii). Therefore, this is a proper petition under 37 CFR 1.78(a)(3).

Although the amendment to the specification submitted with the petition on July 26, 2006 was not acceptable as drafted since it improperly incorporates by reference the prior-filed applications, the amendment submitted on November 1, 2006 deleted the statement.

The petition complies with the requirements for a grantable petition under 37 CFR 1.78(a)(3) in that (1) a reference to the above-noted, prior-filed nonprovisional applications has been included

in an amendment to the first sentence of the specification following the title, as provided by 37 CFR 1.78(a)(2)(iii); (2) the surcharge fee required by 37 CFR 1.17(t) has been submitted; and (3) the petition contains a proper statement of unintentional delay. Accordingly, having found that the instant petition for acceptance of an unintentionally delayed claim for the benefit of priority under 35 U.S.C. § 120 to the prior-filed nonprovisional applications satisfies the conditions of 37 CFR 1.78(a)(3), the petition is granted.

The granting of the petition to accept the delayed benefit claim to the prior-filed applications under 37 CFR 1.78(a)(3) should not be construed as meaning that the instant application is entitled to the benefit of the prior-filed applications. In order for the instant application to be entitled to the benefit of the prior-filed applications, all other requirements under 35 U.S.C. § 120 and 37 CFR 1.78(a)(1) and (a)(2) must be met. Similarly, the fact that the corrected Filing Receipt accompanying this decision on petition includes the prior-filed applications should not be construed as meaning that applicant is entitled to the claim for benefit of priority to the prior-filed applications noted thereon. Accordingly, the examiner will, in due course, consider this benefit claim and determine whether the instant application is entitled to the benefit of the earlier filing date.

A corrected Filing Receipt, which includes the priority claim to the prior-filed nonprovisional applications, accompanies this decision on petition.

Any inquiries concerning this decision may be directed to the undersigned at (571) 272-3282.

This matter is being referred to Technology Center Art Unit 1742 for appropriate action on the amendment filed November 1, 2006, including consideration by the examiner of applicant's entitlement to claim benefit of priority under 35 U.S.C. § 120 to the prior-filed nonprovisional applications.

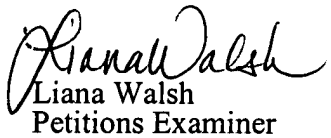

Liana Walsh
Petitions Examiner
Office of Petitions

ATTACHMENT: Corrected Filing Receipt

UNITED STATES PATENT AND TRADEMARK OFFICE

UNITED STATES DEPARTMENT OF COMMERCE
United States Patent and Trademark Office
Address: COMMISSIONER FOR PATENTS
P.O. Box 1450
Alexandria, Virginia 22313-1450
www.uspto.gov

APPL NO.	FILING OR 371(c) DATE	ART UNIT	FIL FEE REC'D	ATTY.DOCKET NO	TOT CLMS	IND CLMS
10/686,486	10/15/2003	1742	770	AMAT/3421.C2/CMP/ECP/RKK	9	1

CONFIRMATION NO. 8014

CORRECTED FILING RECEIPT

44257
PATTERSON & SHERIDAN, LLP
3040 POST OAK BOULEVARD, SUITE 1500
HOUSTON, TX 77056

OC000000024167736

Date Mailed: 05/31/2007

Receipt is acknowledged of this regular Patent Application. It will be considered in its order and you will be notified as to the results of the examination. Be sure to provide the U.S. APPLICATION NUMBER, FILING DATE, NAME OF APPLICANT, and TITLE OF INVENTION when inquiring about this application. Fees transmitted by check or draft are subject to collection. Please verify the accuracy of the data presented on this receipt. **If an error is noted on this Filing Receipt, please mail to the Commissioner for Patents P.O. Box 1450 Alexandria Va 22313-1450. Please provide a copy of this Filing Receipt with the changes noted thereon. If you received a "Notice to File Missing Parts" for this application, please submit any corrections to this Filing Receipt with your reply to the Notice. When the USPTO processes the reply to the Notice, the USPTO will generate another Filing Receipt incorporating the requested corrections (if appropriate).**

Applicant(s)

Robin Cheung, Cupertino, CA;
Ashok Sinha, Palo Alto, CA;
Avi Tepman, Cupertino, CA;
Dan Carl, Pleasanton, CA;

Assignment For Published Patent Application

APPLIED MATERIALS, INC.

Power of Attorney:

Lawrence Edelman--25226
Robert Mulcahy--25436
Peter Sgarbossa--25610
Michael Sherrard--28041
Michael Einschlag--29301
Keith Tackett--32008
John Schiffhauer--32170
Donald Verplancken--33217
Raymond Moser Jr--34682
James Wilson--35412

Domestic Priority data as claimed by applicant

This application is a CON of 09/609,347 07/05/2000 ABN
which is a CON of 09/263,126 03/05/1999 PAT 6,136,163

Foreign Applications

If Required, Foreign Filing License Granted: 01/16/2004

The country code and number of your priority application, to be used for filing abroad under the Paris Convention, is US10/686,486

Projected Publication Date: Not Applicable

Non-Publication Request: No

Early Publication Request: No

Title

Apparatus for electro chemical deposition of copper metallization with the capability of in-situ thermal annealing

Preliminary Class

204

PROTECTING YOUR INVENTION OUTSIDE THE UNITED STATES

Since the rights granted by a U.S. patent extend only throughout the territory of the United States and have no effect in a foreign country, an inventor who wishes patent protection in another country must apply for a patent in a specific country or in regional patent offices. Applicants may wish to consider the filing of an international application under the Patent Cooperation Treaty (PCT). An international (PCT) application generally has the same effect as a regular national patent application in each PCT-member country. The PCT process **simplifies** the filing of patent applications on the same invention in member countries, but **does not result** in a grant of "an international patent" and does not eliminate the need of applicants to file additional documents and fees in countries where patent protection is desired.

Almost every country has its own patent law, and a person desiring a patent in a particular country must make an application for patent in that country in accordance with its particular laws. Since the laws of many countries differ in various respects from the patent law of the United States, applicants are advised to seek guidance from specific foreign countries to ensure that patent rights are not lost prematurely.

Applicants also are advised that in the case of inventions made in the United States, the Director of the USPTO must issue a license before applicants can apply for a patent in a foreign country. The filing of a U.S. patent application serves as a request for a foreign filing license. The application's filing receipt contains further information and guidance as to the status of applicant's license for foreign filing.

Applicants may wish to consult the USPTO booklet, "General Information Concerning Patents" (specifically, the section entitled "Treaties and Foreign Patents") for more information on timeframes and deadlines for filing foreign patent applications. The guide is available either by contacting the USPTO Contact Center at 800-786-9199, or it can be viewed on the USPTO website at http://www.uspto.gov/web/offices/pac/doc/general/index.html.

For information on preventing theft of your intellectual property (patents, trademarks and copyrights), you may wish to consult the U.S. Government website, http://www.stopfakes.gov. Part of a Department of Commerce initiative, this website includes self-help "toolkits" giving innovators guidance on how to protect intellectual property in specific countries such as China, Korea and Mexico. For questions regarding patent enforcement issues, applicants may call the U.S. Government hotline at 1-866-999-HALT (1-866-999-4158).

LICENSE FOR FOREIGN FILING UNDER
Title 35, United States Code, Section 184
Title 37, Code of Federal Regulations, 5.11 & 5.15

GRANTED

The applicant has been granted a license under 35 U.S.C. 184, if the phrase "IF REQUIRED, FOREIGN FILING LICENSE GRANTED" followed by a date appears on this form. Such licenses are issued in all applications where the conditions for issuance of a license have been met, regardless of whether or not a license may be required as set forth in 37 CFR 5.15. The scope and limitations of this license are set forth in 37 CFR 5.15(a) unless an earlier license has been issued under 37 CFR 5.15(b). The license is subject to revocation upon written notification. The date indicated is the effective date of the license, unless an earlier license of similar scope has been granted under 37 CFR 5.13 or 5.14.

This license is to be retained by the licensee and may be used at any time on or after the effective date thereof unless it is revoked. This license is automatically transferred to any related applications(s) filed under 37 CFR 1.53(d). This license is not retroactive.

The grant of a license does not in any way lessen the responsibility of a licensee for the security of the subject matter as imposed by any Government contract or the provisions of existing laws relating to espionage and the national security or the export of technical data. Licensees should apprise themselves of current regulations especially with respect to certain countries, of other agencies, particularly the Office of Defense Trade Controls, Department of State (with respect to Arms, Munitions and Implements of War (22 CFR 121-128)); the Bureau of Industry and Security, Department of Commerce (15 CFR parts 730-774); the Office of Foreign Assets Control, Department of Treasury (31 CFR Parts 500+) and the Department of Energy.

NOT GRANTED

No license under 35 U.S.C. 184 has been granted at this time, if the phrase "IF REQUIRED, FOREIGN FILING LICENSE GRANTED" DOES NOT appear on this form. Applicant may still petition for a license under 37 CFR 5.12, if a license is desired before the expiration of 6 months from the filing date of the application. If 6 months has lapsed from the filing date of this application and the licensee has not received any indication of a secrecy order under 35 U.S.C. 181, the licensee may foreign file the application pursuant to 37 CFR 5.15(b).

UNITED STATES PATENT AND TRADEMARK OFFICE

Commissioner for Patents
United States Patent and Trademark Office
P.O. Box 1450
Alexandria, VA 22313-1450
www.uspto.gov

DIGIMARC CORPORATION
9405 SW GEMINI DRIVE
BEAVERTON, OR 97008

COPY MAILED

APR 14 2005

OFFICE OF PETITIONS

In re Application of
Trent J. Brundage et al
Application No. 10/686,495
Filed: October 14, 2003
Attorney Docket No. P0895

: DECISION ON PETITIONS
: UNDER 37 CFR 1.78(a)(3) AND
: UNDER 37 CFR 1.78(a)(6)

This is a decision on the petitions under 37 CFR §§ 1.78(a)(3) and 1.78(a)(6), filed June 18, 2004, to accept an unintentionally delayed claim under 35 U.S.C. §120, and 119(e) for the benefit of the prior-filed applications set forth in the concurrently filed Application Data Sheet.

The petitions are **Granted**.

A petition for acceptance of a claim for late priority under 37 CFR §§ 1.78(a)(3) and 1.78(a)(6) is only applicable to those applications filed on or after November 29, 2000. Further, the petition is appropriate only after the expiration of the period specified in 37 CFR §§ 1.78(a)(2)(ii) and 1.78(a)(5)(ii). In addition, the petition under 37 CFR §§ 1.78(a)(3) and 1.78(a)(6) must be accompanied by:

(1) the reference required by 35 U.S.C. §§ 120 and 119(e) and 37 CFR §§ 1.78(a)(2)(i) and 1.78(a)(5)(i) of the prior-filed application, unless previously submitted;
(2) the surcharge set forth in § 1.17(t); and
(3) a statement that the entire delay between the date the claim was due under 37 CFR §§ 1.78(a)(2)(ii) and 1.78(a)(5)(ii) and the date the claim was filed was unintentional. The Commissioner may require additional where there is a question whether the delay was unintentional.

The instant nonprovisional application was filed after November 29, 2000, and the claim herein for the benefit of priority to the prior-filed applications is submitted after expiration of the period specified in 37 CFR §§ 1.78(a)(2)(ii) and 1.78(a)(5)(ii). Therefore, this is a proper petition under 37 CFR §§ 1.78(a)(3) and 1.78(a)(6).

The instant nonprovisional application was pending at the time of filing of the reference to the prior-filed provisional application as required by 37 CFR 1.78(a)(5)(ii). Additionally, intermediate Application No. 09/442,780 was filed within twelve months of the filing date of the prior-filed provisional application, Application No. 60/109,259, filed November 19, 1998.

The petition complies with the requirements for a grantable petition under 37 CFR §§1.78(a)(3) and 1.78(a)(6) in that (1) a reference to the above-noted, prior-filed nonprovisional applications has been included in an Application Data Sheet, as provided by 37 CFR §§ 1.78(a)(2)(iii) and 1.78(a)(5)(iii); (2) the surcharge fee required by 37 CFR 1.17(t) has been submitted; and (3) the petition contains a proper statement of unintentional delay. Accordingly, having found that the instant petition for acceptance of an unintentionally delayed claim for the benefit of priority under 35 U.S.C. §§ 120 and 119(e) to the above-noted, prior-filed applications satisfies the conditions of 37 CFR §§ 1.78(a)(3) and 1.78(a)(6), the petition is granted.

The granting of the petition to accept the delayed benefit claim to the prior-filed applications under 37 CFR §§ 1.78(a)(3) and 1.78(a)(6) should <u>not</u> be construed as meaning that the instant application is entitled to the benefit of the filing date of the prior-filed applications. In order for the instant application to be entitled to the benefit of the prior-filed applications, all other requirements under 35 U.S.C. §120 and 1.78(a)(1) and (a)(2) and under 35 U.S.C. §119(e) and 37 CFR 1.78(a)(4) and (a)(5) must be met. Similarly, the fact that the corrected Filing Receipt accompanying this decision on petition includes the prior-filed applications should <u>not</u> be construed as meaning that applicant is entitled to the claim for benefit of priority to the prior-filed applications noted thereon. Accordingly, the examiner will, in due course, consider this benefit claim and determine whether the instant application is entitled to the benefit of the earlier filing date.

A corrected Filing Receipt, which includes the priority claim to the prior-filed applications, accompanies this decision on petition.

Any questions concerning this matter may be directed to the undersigned at (571) 272-3208. All other inquiries concerning either the examination procedures or status of the application should be directed to the Technology Center.

This matter is being referred to Technology Center Art Unit 2135 for consideration by the examiner of the claim under 35 U.S.C. §120 and 37 CFR 1.78(a)(2) for the benefit of the prior-filed applications, and for consideration of the claim under 35 U.S.C. §119(e) and 37 CFR 1.78(a)(5) for the benefit of the prior-filed provisional application.

Karen Creasy

Karen Creasy
Petitions Examiner
Office of Petitions
Office of the Deputy Commissioner
for Patent Examination Policy

ATTACHMENT : Corrected Filing Receipt

UNITED STATES PATENT AND TRADEMARK OFFICE

Commissioner for Patents
United States Patent and Trademark Office
P.O. Box 1450
Alexandria, VA 22313-1450
www.uspto.gov

PILLSBURY WINTHROP SHAW PITTMAN, LLP
P.O. BOX 10500
MCLEAN VA 22102

COPY MAILED

MAR 30 2007

OFFICE OF PETITIONS

RECEIVED
CANCELLED
MAR 30 2007
OFFICE OF PETITIONS

In re Application of
Yi-Xiong **ZHOU**
Application No. 10/686,499
Filed: October 14, 2003
Attorney Docket No. BDI004-CIP

DECISION ON PETITION
TO WITHDRAW
FROM RECORD

This is a decision on the Request to Withdraw as attorney or agent of record under 37 C.F.R. § 1.36(b), filed September 18, 2006.

The request is **APPROVED**.

A grantable request to withdraw as attorney/agent of record must be signed by every attorney/agent seeking to withdraw or contain a clear indication that one attorney is signing on behalf of another/others. A request to withdraw will not be approved unless at least 30 (thirty) days would remain between the date of approval and the later of the expiration date of a time to file a response or the expiration date of the maximum time period which can be extended under 37 C.F.R. § 1.136(a).

The request was signed by James G. Gatto on behalf of all attorneys of record. All attorneys/agents associated have been withdrawn. Applicant is reminded that there is no attorney of record at this time.

The request to change the correspondence of record is not acceptable as the requested correspondence address is not that of: (1) the first named signing inventor; or (2) an intervening assignee of the entire interest under 37 C.F.R 3.71. All future communications from the Office will be directed to the first named signing inventor at the first copied address below until otherwise properly notified by the applicant.

There is an outstanding Office action mailed September 21, 2006 that requires a reply from the applicant.

Telephone inquiries concerning this decision should be directed to the undersigned at 571-272-7253.

Monica A. Graves
Petitions Examiner
Office of Petitions

cc: **YI-XIONG ZHOU**
100 N. SAPUVEDE BLVD, SUITE 1230
EL SEGUNDO, CA 90245

cc: **DR. SOHEIL SHAMS**
BIODISCOVERY, INC.
2121 ROSECRANS AVENUE, SUITE 3315
EL SEGUNDO, CA 90245

OIPE
AUG 31 2005
PATENT & TRADEMARK OFFICE

PATENT

IN THE UNITED STATES PATENT AND TRADEMARK OFFICE

Application No.:	10/686,506
Filing Date:	October 15, 2003
Applicant:	Milligan et al.
Group Art Unit:	1744
Examiner:	Terrence R. Till
Title:	HAND-HELD CORDLESS VACUUM CLEANER
Attorney Docket:	0275R-000799

Mail Stop Petition
Commissioner for Patents
P.O. Box 1450
Alexandria, Virginia 22313-1450

PETITION TO MAKE SPECIAL BECAUSE OF ACTUAL INFRINGMENT

Sir:

Applicant hereby petitions to make this application special because of actual infringement.

Accompanying this petition is:

(a) a Statement by Attorney in Support of Petition to Make Special Because of Actual Infringement; and

(b) a fee transmittal (in duplicate) authorizing the Director to charge the petition fee of $130.00 to Deposit Account 02-2548.

09/06/2005 MAHMED1 00000013 022548 10686506
01 FC:1464 130.00 DA

PETITION GRANTED

Richard Crispino
Special Program Examiner
TC 1700

SEP 28 2005

UNITED STATES PATENT AND TRADEMARK OFFICE

COMMISSIONER FOR PATENTS
UNITED STATES PATENT AND TRADEMARK OFFICE
P.O. BOX 1450
ALEXANDRIA, VA 22313-1450
WWW.USPTO.GOV

Paper No. None

Leslie Hodges
General Motors Corporation
Mail Code: 482-C23-B21, Legal Staff
P.O. Box 300
Detroit MI 48265-3000

COPY MAILED

OCT 26 2007

OFFICE OF PETITIONS

In re Application of :
Todd M. Steinmetz et al. :
Application No. 10/686,510 :
Filed: October 14, 2003 :
Attorney Docket No.: GP-304171 :
Title: SYNCHRONOUS SHIFT :
CONTROL IN AN ELECTRICALLY :
VARIABLE TRANSMISSION :

DECISION ON PETITION
UNDER 37 C.F.R. § 1.137(B)

This is a decision on the petition filed June 1, 2007, pursuant to 37 C.F.R. § 1.137(b)[1], to revive the above-identified application.

The above-identified application became abandoned for failure to reply within the meaning of 37 C.F.R § 1.113 in a timely manner to the final Office action mailed September 12, 2006, which set a shortened statutory period for reply of three months. A terminal disclaimer was received on November 21, 2006, and an advisory action was mailed on February 1, 2007. No extensions

1 A grantable petition pursuant to 37 C.F.R. § 1.137(b) must be accompanied by:

(1) The reply required to the outstanding Office action or notice, unless previously filed;
(2) The petition fee as set forth in § 1.17(m);
(3) A statement that the entire delay in filing the required reply from the due date for the reply until the filing of a grantable petition pursuant to this paragraph was unintentional. The Commissioner may require additional information where there is a question whether the delay was unintentional, and;
(4) Any terminal disclaimer (and fee as set forth in § 1.20(d)) required pursuant to paragraph (d) of this section.

of time under the provisions of 37 C.F.R § 1.136(a) were obtained, and no further responses were received. Accordingly, the above-identified application became abandoned on December 13, 2006. A notice of abandonment was mailed on May 24, 2007.

With the present petition, Petitioner has included both the petition fee and the proper statement of unintentional delay. The concurrently submitted terminal disclaimer shall serve as the required reply.

The petition is **GRANTED**.

The Technology Center will be notified of this decision. The Technology Center's support staff will notify the Examiner of this decision, so that the terminal disclaimer that was filed concurrently with the present petition can be processed.

The general phone number for OIPE is 571-272-4000. Telephone inquiries regarding this decision should be directed to the undersigned at (571) 272-3225.

Paul Shanoski
Senior Attorney
Office of Petitions
United States Patent and Trademark Office

UNITED STATES PATENT AND TRADEMARK OFFICE

Commissioner for Patents
United States Patent and Trademark Office
P.O. Box 1450
Alexandria, VA 22313-1450
www.uspto.gov

COPY MAILED

SEP 26 2007

OFFICE OF PETITIONS

Morrison & Foerster LLP
1650 Tysons Boulevard
Suite 400
Mclean, VA 22102

In re Application of :
Karsten Luttge :
Application No. 10/686,523 : DECISION ON PETITION
Filed: October 16, 2003 : TO WITHDRAW
Attorney Docket No. 44912206330 : FROM RECORD

This is a decision on the Request to Withdraw as attorney or agent of record under 37 C.F.R. § 1.36(b), filed May 25, 2007.

The request is **NOT APPROVED** as moot.

A review of the file record indicates that the power of attorney to Morrison & Foerster LLP has been revoked by the assignee of the patent application on August 3, 2007. Accordingly, the request to withdraw under 37 C.F.R. § 1.36(b) is moot.

All future communications from the Office will continue to be directed to the below-listed address until otherwise notified by applicant.

Telephone inquires concerning this decision should be directed to Terri Williams at 571-272-2991.

T. Williams

Terri Williams
Petitions Examiner
Office of Petitions

cc: **Bell, Boyd & Lloyd, LLP**
P.O. Box 1135
Chicago, IL 60690

UNITED STATES PATENT AND TRADEMARK OFFICE

Commissioner for Patents
United States Patent and Trademark Office
P.O. Box 1450
Alexandria, VA 22313-1450
www.uspto.gov

Randall S. Svihla
Stein, Mcewen & Bui, LLP
1400 Eye St., NW
Suite 300
Washington, D.C. 20005

MAILED

JAN 10 2008

Technology Center 2100

In re Application of:
Hyun-Kwon Chung et al.
Application No. 10/686,537
Filed: October 16, 2003
For: DATA STORAGE MEDIUM HAVING INFORMATION FOR CONTROLLING BUFFERED STATE OF MARKUP DOCUMENT, AND METHOD AND APPARATUS FOR REPRODUCING DATA FROM THE DATA STORAGE MEDIUM

DECISION ON PETITION UNDER 37 CFR § 1.181

This is a corrected decision on the petition under 37 C.F.R. § 1.181 for Withdrawal of Finality of Office and Restarting of Period for Response filed.

The petition is **GRANTED**.

On 05 September 2005, Petitioner filed a response to an Office Action mailed 05 June 2007. In this response, claims 1-7 are amended to change "data storage" to "computer-readable".

In an Office Action mailed 15 November 2007, the examiner finally rejected all claims 1-9. In this action, the examiner rejected claims 1, and 8-9 as being anticipated by Sullivan for the first time. Claims 1-9 are rejected under 35 USC 101 as being directed to non-statutory subject matter. The claims are alleged to store nonfunctional descriptive material and to include a carrier wave.

In the petition filed on 06 December 2007, Petitioner asserts that the final rejection is premature in that it includes three new grounds of rejection not necessitated by amendments. To buttress his position, Petitioner directs attention to paragraph 95 of the specification as originally filed which discloses that the invention includes "...permanent and removable storage, such as magnetic and optical discs, RAM, ROM, a carrier wave medium, etc...". Petitioner also alleges that amendments made to claims 1-7 did not necessitate application of Sullivan as "the Examiner has not identified any element in Sullivan that can be considered to be a 'computer-readable' medium but not a 'data storage' medium". Finally, Petitioner alleges that use of Goodman and the Heritage College Dictionary to define "interactive" in the Examiner's response to arguments constitutes a new ground of rejection.

I. As noted in MPEP 706.07(a),

> Under present practice, second or any subsequent actions on the merits shall be final, except where the examiner introduces a new ground of rejection that is neither necessitated by applicant's amendment of the claims, nor based on information submitted in an information disclosure statement filed during the period set forth in 37 CFR 1.97(c) with the fee set forth in 37 CFR 1.17(p).

As acknowledged by Petitioner, neither "computer-readable" or "data storage" has antecedent basis in the specification. However, the portion of the specification that would provide support for these terms, paragraph 95, makes clear that the carrier wave medium, RAM, and ROM are all examples of storage. Thus, "data storage" and "computer-readable" mediums should both be interpreted to include carrier waves. Inclusion of the rejection of claims 1-9 under 35 USC 101 as including carrier waves for the first time in the Final Rejection was therefore inappropriate.

As to arguments presented traversing use of Sullivan as a basis of the rejection, the relevant issue is whether a previously applied reference could be used to address new limitations added to an amended claim, not whether a newly cited reference could be used to address limitations as originally presented. In this case, amending the claims from "data storage" to "computer readable" did not necessitate application of a new reference (Sullivan).

Finally, Goodman and the American Heritage College Dictionary were used to rebut arguments advanced by the Applicant. They do not form the basis of a rejection and are not considered a new ground of rejection.

II. As noted in MPEP 710.06,

> Where the citation of a reference is incorrect or an Office action contains some other error that affects applicant's ability to reply to the Office action and this error is called to the attention of the Office within 1 month of the mail date of the action, the Office will restart the previously set period for reply to run from the date the error is corrected, if requested to do so by applicant.

Errors in the Office Action mailed 15 November 2007 are noted above, and Petitioner has requested that the period for response be restarted.

For the above stated reasons, the petition is **GRANTED**. The finality of the Office Action mailed on 15 November 2007 is hereby withdrawn and the status of that Action is changed to non-final. The period of response will be reset to start Three Months from the date of this Decision.

Any inquiry concerning this decision should be directed to the undersigned whose telephone number is (571) 272-3591.

/Gail O. Hayes/

Gail O. Hayes
Special Program Examiner/Quality Assurance Specialist
Technology Center 2100
Computer Architecture, Software, and
Information Security

UNITED STATES PATENT AND TRADEMARK OFFICE

Commissioner for Patents
United States Patent and Trademark Office
P.O. Box 1450
Alexandria, VA 22313-1450
www.uspto.gov

BRINKS HOFER GILSON & LIONE
P.O. BOX 10395
CHICAGO IL 60610

COPY MAILED

NOV 0 4 2008

OFFICE OF PETITIONS

In re Application of :
Patrick J. WALSH :
Application No. 10/686,553 : ON PETITION
Filed: October 14, 2003 :
Attorney Docket No. 8285-00646 :

This is a decision on

(1) the petition under 37 CFR 1.181 (no fee) requesting withdrawal of the holding of abandonment in the above-identified application;

(2) the petition under the unavoidable provisions of 37 CFR 1.137(a) to revive the above-identified application; and

(3) the petition under the unintentional provisions of 37 CFR 1.137(b) to revive the above-identified application.

These three petitions were filed concurrently on August 18, 2008.

The petition under 37 C.F.R. 1.181 is **DISMISSED**, the petition to revive under 37 C.F.R. 1.137(a) is **DISMISSED**, and the petition to revive under 37 C.F.R. 1.137(b) is **DISMISSED**.

This application became abandoned for failure to timely pay the issue and publication fees on or before June 16, 2008, as required by the Notice of Allowance and Fee(s) Due, mailed March 14, 2008. Accordingly, the date of abandonment of this application is June 15, 2008.

Withdraw the Holding of Abandonment

Any request for reconsideration of this decision should be filed within two (2) months from the mail date of this decision. *Note* 37 CFR 1.181(f). The request for reconsideration should include a cover letter and be entitled as a "Renewed Petition under 37 CFR 1.181 to Withdraw the Holding of Abandonment."

Petitioner asserts that the Notice of Allowance, mailed March 14, 2008, was not received.

A review of the written record indicates no irregularity in the mailing of the Notice, and, in the absence of any irregularity, there is a strong presumption that the Notice was properly mailed to the practitioner at the address of record. This presumption may be overcome by a showing that the Notice was not in fact received. In this regard, the showing required to establish the failure to receive the Notice must consist of the following:

1. a statement from practitioner stating that the Notice was not received by the practitioner;
2. a statement from the practitioner attesting to the fact that a search of the file jacket and docket records indicates that the Notice was not received; and
3. a copy of the docket record where the nonreceived Notice would have been entered had it been received must be attached to and referenced in the practitioner'statement.

See MPEP § 711.03(c) under subheading "Petition to Withdraw Holding of Abandonment Based on Failure to Receive Office Action," and "Withdrawing the Holding of Abandonment When Office Actions Are Not Received," 1156 Official Gazette 53 (November 16, 1993).

The petition fails to satisfy all of the above-stated requirements. In this regard, petitioner does state that the Notice was not received and does attest to the fact that a search of the docket logs and file history indicates that no record in the possession of the undersigned attorney indicates that a Notice was received and provides copies of an incoming log, an action log and a file jacket which is helpful. However, this alone is not sufficient. The showing required must include a statement from the practitioner describing the docketing system and indicating that the docketing system is sufficiently reliable. *See* MPEP § 711.03(c), I, A. The petition does not describe the docketing system or establish its reliability.

Moreover, a copy of the practitioner's record(s) required to show non-receipt of the Notice should include the master docket for the firm. That is, if a three month period for reply was set in the nonreceived Notice, a copy of the master docket report showing all of the replies docketed for a date three months from the mail date of the nonreceived Notice must be submitted as documentary proof of nonreceipt of the Notice. If no such master docket exists, practitioner should so state and provide other evidence such as, but not limited, the following: the application file jacket; incoming mail log; calendar; reminder system; or the individual docket record for the application in question.

Accordingly, absent the required evidence to establish nonreceipt of the Notice of Allowance Fee, the petition requesting withdrawal of the holding of abandonment cannot be granted at this time.

Revive, Unavoidable Delay

Any request for reconsideration of this decision should be filed within two (2) months from the mail date of this decision. *Note* 37 CFR 1.181(f). The request for reconsideration should include a cover letter and be entitled as a "Renewed Petition under 37 CFR 1.137(a) to Revive Unavoidably Abandoned Application."

In regard to the "unavoidable" standard applied by the U.S Patent and Trademark Office, petitioner should note that decisions on reviving abandoned applications on the basis of "unavoidable" delay have adopted the reasonably prudent person standard in determining if the delay was unavoidable:

> The word 'unavoidable' . . . is applicable to ordinary human affairs, and requires no more or greater care or diligence than is generally used and observed by prudent and careful men in relation to their most important business. It permits them in the exercise of this care to rely upon the ordinary and trustworthy agencies of mail and telegraph, worthy and reliable employees, and such other means and instrumentalities as are usually employed in such important business. If unexpectedly, or through the unforeseen fault or imperfection of these agencies and instrumentalities, there occurs a failure, it may properly be said to be unavoidable, all other conditions of promptness in its rectification being present.

In re Mattullath, 38 App. D.C. 497, 514-15 (1912)(quoting Ex parte Pratt, 1887 Dec. Comm'r Pat. 31, 32-33 (1887)); see also Winkler v. Ladd, 221 F. Supp. 550, 552, 138 USPQ 666, 167-68 (D.D.C. 1963), aff'd, 143 USPQ 172 (D.C. Cir. 1963); Ex parte Henrich, 1913 Dec. Comm'r Pat. 139, 141 (1913).

In addition, decisions on revival are made on a "case-by-case basis, taking all the facts and circumstances into account." Smith v. Mossinghoff, 671 F.2d 533, 538, 213 USPQ 977, 982 (D.C. Cir. 1982). Although the agency of mail was relied upon in this instance, the evidence of record fails to establish that the mail was the source of the lack of timely reply to the Notice of Allowance. As noted above in regard to the petition to withdraw the holding of abandonment, a review of the written record indicates no irregularity in the mailing of the Notice, and, in the absence of any irregularity, there is a strong presumption that the Notice was properly mailed to the practitioner at the address of record. The record also does not describe the docketing system or establish its reliability, which would address the possibility that the Notice was received but not properly docketed, or received and properly docket in a record lost or misplaced, i.e. "no longer in the possession of the undersigned attorney".

As is well established, a petition cannot be granted where a petitioner has failed to meet his or her burden of establishing that the delay was "unavoidable." Haines v. Quigg, 673 F. Supp. 314, 316-17, 5 USPQ2d 1130, 1131-32 (N.D. Ind. 1987). Here, since the evidence of record is insufficient to establish that the delay was unavoidable, the petition requesting the revival of the application due to unavoidable delay cannot be granted at this time.

Revive, Unintentional Delay

Any request for reconsideration of this decision should be filed within two (2) months from the mail date of this decision. Note 37 CFR 1.181(f). The request for reconsideration should include a cover letter and be entitled as a "Renewed Petition under 37 CFR 1.137(a) to Revive Unintentionally Abandoned Application."

A grantable petition under 37 CFR 1.137(b) must be accompanied by: (1) the required reply in the form of payment of the issue fee of $1440 and the publication fee of $300, unless previously filed; (2) the petition fee as set forth in 37 CFR 1.17(m); (3) a statement that the entire delay in filing the required reply from the due date for the reply until the filing of a grantable petition pursuant to 37 CFR 1.137(b) was unintentional; and (4) any terminal disclaimer (and fee as set forth in 37 CFR 1.20(d)) required by 37 CFR 1.137(d). Where there is a question as to whether either the abandonment or the delay in filing a petition under 37 CFR 1.137 was unintentional, the Director may require additional information. See MPEP 711.03(c)(II)(C) and (D). The present petition lacks item (3).

37 CFR 1.137(b)(3) requires a statement that "the entire delay in filing the required reply from the due date for the reply until the filing of a grantable petition pursuant to 37 CFR 1.137(b) was unintentional." In regard to this statement of unintentional delay, the person making such statement of unintentional delay should be in a position to have firsthand or direct knowledge of the facts and circumstances of the delay at issue, i.e. such statement is the result of a reasonable inquiry into the facts and circumstances of such delay. See 37 CFR 10.18(b) and Changes to Patent Practice and Procedure; Final Rule Notice, 62 Fed. Reg. 53131, 53178 (October 10, 1997), 1203 Off. Gaz. Pat. Office 63, 103 (October 21, 1997.

A petition fee of $1540 has been charged to deposit account 23-1925.

Further correspondence with respect to this matter should be addressed as follows:

By mail:
Mail Stop PETITIONS
Commissioner for Patents
Post Office Box 1450
Alexandria, VA 22313-1450

By hand:
Customer Service Window
Mail Stop Petitions
Randolph Building
401 Dulany Street
Alexandria, VA 22314

By fax:
(703) 872-9306
ATTN: Office of Petitions

Telephone inquiries concerning this decision should be directed to Karin Reichle at (571) 272-6051.

David Bucci
Petitions Examiner
Office of Petitions

UNITED STATES PATENT AND TRADEMARK OFFICE

Commissioner for Patents
United States Patent and Trademark Office
P.O. Box 1450
Alexandria, VA 22313-1450
www.uspto.gov

BRINKS HOFER GILSON & LIONE
P.O. BOX 10395
CHICAGO IL 60610

COPY MAILED

JAN 2 1 2009

OFFICE OF PETITIONS

In re Application of :
Patrick J. WALSH. :
Application No. 10/686,553 : ON PETITION
Filed: October 14, 2003 :
Attorney Docket No. 08285-00646 :

This is a decision on the renewed petition filed November 25, 2008 under 37 CFR 1.181, requesting withdrawal of the Notice of Abandonment mailed July 9, 2008 and, alternatively, under 37 CFR 1.137(a) and 37 CFR 1.137(b) to revive the above-identified application.

The petition under 37 CFR 1.181 is **GRANTED**.

The above-identified application became abandoned for failure to submit the issue fee in a timely manner in reply to the Notice of Allowance mailed March 14, 2008, which set a statutory period for reply of three (3) months. Accordingly, by operation of law, the above-identified application became abandoned on June 15, 2008.

Petitioner asserts the Notice of Abandonment mailed July 30, 2008 be withdrawn as petitioner never received the Notice of Allowance mailed March 14, 2008.

To support this assertion petitioner has submitted: (1) a statement from the practitioner stating that the Office communication was not received by the practitioner and attesting to the fact that a search of the file jacket and docket records indicates that the Office communication was not received; and (2) a copy of the docket record where the nonreceived Office communication would have been entered had it been received and docketed. Accordingly, it is concluded that petitioner never received the Notice of Allowance mailed March 14, 2008.

The holding of abandonment is hereby withdrawn, and the application restored to pending status.

In view of the above, the petitions under 37 CFR 1.137(a) and 37 CFR 1.137(b) are **DISMISSED AS MOOT.**

Telephone inquiries concerning this decision should be directed to Felix O. Figueroa at (571) 272-6051 or in his absence, the undersigned at (571) 272-7099.

The application file is being referred to the Office of Data Management.

David Bucci
Petitions Examiner
Office of Petitions

UNITED STATES PATENT AND TRADEMARK OFFICE

Commissioner for Patents
United States Patent and Trademark Office
P.O. Box 1450
Alexandria, VA 22313-1450
www.uspto.gov

GRAYBEAL JACKSON HALEY LLP
155 – 108TH AVENUE NE, SUITE 350
BELLEVUE, WA 98004-5973

COPY MAILED

DEC 17 2007

OFFICE OF PETITIONS

In re Application of :
Prewitt Lee :
Application No. 10/686,555 : ON PETITION
Filed: October 14, 2003 :
Attorney Docket No. 618-7-3 :

This is a decision on the petition under 37 CFR 1.137(b), filed August 24, 2007, to revive the above-identified application.

The petition is **GRANTED**.

The above-identified application became abandoned for failure to reply in a timely manner to the Office action mailed April 10, 2007, which set a shortened statutory period for reply of one (1) month or thirty (30) days (whichever is later). Accordingly, the above-identified application became abandoned on May 11, 2007.

Telephone inquiries concerning this decision should be directed to Irvin Dingle at (571) 272-3210.

This matter is being referred to Technology Center AU 2186 for further processing.

Irvin Dingle
Petitions Examiner
Office of Petitions

UNITED STATES PATENT AND TRADEMARK OFFICE

Commissioner for Patents
United States Patent and Trademark Office
P.O. Box 1450
Alexandria, VA 22313-1450
www.uspto.gov

Locke Liddell & Sapp LLP
Attn: Docketing Dept.
2200 Ross Avenue
Suite 2200
Dallas, TX 75201-6776

COPY MAILED

AUG 31 2007

OFFICE OF PETITIONS

In re Application of	:	
Terry Anthony Will et al.	:	
Application No. 10/686,592	:	DECISION ON PETITION
Filed: December 17, 2003	:	TO WITHDRAW
Attorney Docket No. 23952-0238	:	FROM RECORD
	:	

This is a decision on the Request to Withdraw as attorney or agent of record under 37 C.F.R. § 1.36(b), filed April 10, 2007.

The request is **NOT APPROVED** as moot.

A review of the file record indicates that the power of attorney to Locke Liddell & Sapp LLP has been revoked by the assignee of the patent application on June 1, 2007. Accordingly, the request to withdraw under 37 C.F.R. § 1.36(b) is moot.

All future communications from the Office will continue to be directed to the below-listed address until otherwise notified by applicant.

Telephone inquires concerning this decision should be directed to Terri Williams at 571-272-2991.

T. Williams

Terri Williams
Petitions Examiner
Office of Petitions

cc: **Sutherland Asbill & Brennan LLP**
999 Peactree Street, N.E.
Atlanta, GA 30309

UNITED STATES PATENT AND TRADEMARK OFFICE

Commissioner for Patents
United States Patent and Trademark Office
P.O. Box 1450
Alexandria, VA 22313-1450
www.uspto.gov

SUTHERLAND ASBILL & BRENNAN LLP
999 PEACHTREE STREET, NE
ATLANTA GA 30309

COPY MAILED

JAN 16 2009

In re Application of :
Terry WILL et al. :
Application No. 10/686,592 : ON PETITION
Filed: October 17, 2003 :
Attorney Docket No. 23952-0238 :

This is a decision on the petition under 37 CFR 1.137(b), filed August 21, 2008 to revive the above-identified application.

The petition is **GRANTED**.

The above-identified application became abandoned for failure to submit the issue fee in a timely manner in reply to the Notice of Allowance mailed May 7, 2008, which set a statutory period for reply of three (3) months. Accordingly, by operation of law, the above-identified application became abandoned on August 8, 2008.

The petition satisfies the conditions for revival pursuant to the provisions of 37 CFR 1.137(b) in that (1) the reply in the form of payment of the Issue Fee; (2) the petition fee of $1540; and (3) the required statement of unintentional delay have been received. Accordingly, the Issue Fee payment is accepted as having been unintentionally delayed.

Telephone inquiries concerning this decision should be directed to Felix O. Figueroa at (571) 272-6051 or in his absence, the undersigned at (571) 272-7099.

The application file is being referred to the office of Data Management.

David Bucci
Petitions Examiner
Office of Petitions

UNITED STATES PATENT AND TRADEMARK OFFICE

Commissioner for Patents
United States Patent and Trademark Office
P.O. Box 1450
Alexandria, VA 22313-1450
www.uspto.gov

FINNEGAN, HENDERSON, FARABOW, GARRETT & DUNNER
LLP
901 NEW YORK AVENUE, NW
WASHINGTON DC 20001-4413

COPY MAILED

DEC 2 0 2007

OFFICE OF PETITIONS

In re Patent No. 7,188,395 :
Issue Date: March 13, 2007 :
Application No. 10/686,594 : DECISION ON PETITION
Filed: October 17, 2003 :
Attorney Docket No. 05711.0158 :

This is a decision on the petition under 37 CFR 1.182, filed October 19, 2007, requesting issuance of a duplicate Letters Patent for the above-identified patent.

The petition is **GRANTED**.

The Publishing Division is directed to issue a duplicate Letters Patent.

The Office is in receipt of $130.00. However, the current petition fee is $400.00. As authorized, the $270.00 difference for the petition under 37 CFR 1.182 has been assessed to petitioner's deposit account.

Telephone inquiries concerning this decision may be directed to the undersigned at (571) 272-3215. Inquiries regarding the issuance of a duplicate Letters Patent may be directed to Krystal Paige in the Publishing Division at (703) 308-9250, Ext. 139.

A copy of this decision is being faxed to Publishing Division for issuance of a duplicate Letters Patent.

Charlema Grant
Petitions Attorney
Office of Petitions

cc: Krystal Paige, South Tower, 8th Floor, Room C32 (Fax No. (571) 270-9937)

UNITED STATES PATENT AND TRADEMARK OFFICE

Commissioner for Patents
United States Patent and Trademark Office
P.O. Box 1450
Alexandria, VA 22313-1450
www.uspto.gov

OBLON SPIVAK MCCLELLAND
MAIER & NEUSTADT, P.C.
1940 DUKE STREET
ALEXANDRIA, VA 22314

COPY MAILED

APR 22 2005

OFFICE OF PETITIONS

ON PETITION

In re Application of :
Eiji Morimoto et al :
Application No. 10/686,618 :
Filed: October 17, 2003 :
Attorney Docket No. 244148US0

This is a decision on the petition, filed April 22, 2005, under 37 CFR 1.313(c)(2) to withdraw the above-identified application from issue after payment of the issue fee.

The petition is **GRANTED**.

The above-identified application is withdrawn from issue for consideration of a submission under 37 CFR 1.114 (request for continued examination). See 37 CFR 1.313(c)(2).

Petitioner is advised that the issue fee paid on January 25, 2005 in the above-identified application cannot be refunded. If, however, the above-identified application is again allowed, petitioner may request that it be applied towards the issue fee required by the new Notice of Allowance.[1]

Telephone inquiries should be directed to Irvin Dingle at (571) 272-3210.

This matter will be forwarded to Technology Center AU 1711 for processing of the request for continued examination under 37 CFR 1.114 and for consideration of the concurrently filed Information Disclosure Statement.

Irvin Dingle
Petitions Examiner
Office of Petitions
Office of the Deputy Commissioner
for Patent Examination Policy

[1] The request to apply the issue fee to the new Notice may be satisfied by completing and returning the new Issue Fee Transmittal Form PTOL-85(b), which includes the following language thereon: Commissioner for Patents is requested to apply the Issue Fee and Publication Fee (if any) or re-apply any previously paid issue fee to the application identified above. Petitioner is advised that, whether a fee is indicated as being due or not, the Issue Fee Transmittal Form **must** be completed and timely submitted to avoid abandonment. Note the language in bold text on the first page of the Notice of Allowance and Fee(s) Due (PTOL-85).

UNITED STATES PATENT AND TRADEMARK OFFICE

COMMISSIONER FOR PATENTS
UNITED STATES PATENT AND TRADEMARK OFFICE
P.O. BOX 1450
ALEXANDRIA, VA 22313-1450
www.uspto.gov

Paper No.

TEXAS INSTRUMENTS INCORPORATED
P O BOX 655474, M/S 3999
DALLAS, TX 75265

COPY MAILED

APR 26 2004

OFFICE OF PETITIONS

In re Application of :
Dunagan et al. :
Application No. 10/686,620 :
Filed: October 17, 2003 : Decision on Petition
Attorney Docket Number: :
223569 :

This is a decision in response the Petition for Grant of Filing Date and Request for Refund, filed February 24, 2004, requesting the application be accorded a filing date of October 17, 2003, including 14 sheets of drawings.

The petition is **granted**.

The application was filed on October 17, 2003. However, on February 2, 2004, the Office of Initial Patent Examination mailed a Notice of Incomplete Provisional Application, noting that a filing date had not been accorded the application because the application had been deposited without drawings.

In response, Applicant files the instant petition wherein Applicant avers that 14 sheets of drawings were originally filed with the application on October 17, 2003, and were received by this Office as evidenced by the return-receipt postcard. In support of this assertion, Applicant provides a copy of a return receipt postcard acknowledging receipt of, *inter alia*, 14 sheets of drawings on October 17, 2003.

A review of the return receipt postcard reveals that Petitioner is correct. The postcard acknowledges receipt of, *inter alia*, 14 sheets of drawings on October 17, 2003. Petitioner has also re-submitted the formal drawings with the instant petition.

Evidence of receipt of any correspondence filed in the Patent and Trademark Office can be obtained by submitting a self-addressed postcard properly itemizing and identifying the paper or papers being filed. Upon receipt of the correspondence, the Patent and Trademark Office will check the listing on the post

BEST AVAILABLE COPY

card against the papers submitted, making sure that all items listed are present and will then stamp the postcard with an Official date stamp and place the postcard in the outgoing mail. "A postcard receipt which itemizes and properly identifies the papers which are being filed serves as *prima facie* evidence of receipt in the PTO of all items listed thereon by the PTO." MPEP § 503.

The copy of the 14 sheets of formal drawings, supplied on February 24, 2004, will be used for examination purposes.

A refund of the petition fee has been credited to deposit account 12-1216 as authorized in the instant petition.

The application will be returned to the Office of Initial Patent Examination for further processing as a nonprovisional application with a filing date of October 17, 2003, and an indication that 14 sheets of drawings were present on filing, using the 14 sheets of drawings filed on February 24, 2004.

Telephone inquiries concerning this matter should be directed to the undersigned at (703) 305-0014.

Derek L. Woods
Petitions Attorney
Office of Petitions

BEST AVAILABLE COPY

UNITED STATES PATENT & TRADEMARK OFFICE
Washington, D.C. 20231

REQUEST FOR **PATENT** FEE REFUND

1 Date of Request: 4-23-04

2 Serial/Patent # 10/686,620

	3 Please refund the following fee(s):	4 PAPER NUMBER	5 DATE FILED	6 AMOUNT
	Filing			$
	Amendment			$
	Extension of Time			$
	Notice of Appeal/Appeal			$
✓	Petition		2/24/04	$ 130.00
	Issue			$
	Cert of Correction/Terminal Disc.			$
	Maintenance			$
	Assignment			$
	Other			$

7 TOTAL AMOUNT OF REFUND $ 130.00

8 TO BE REFUNDED BY:

- [ ] Treasury Check
- [ ] Credit Deposit A/C #:

9 12--1216

10 REASON:

- [ ] Overpayment
- [ ] Duplicate Payment
- [ ] No Fee Due (Explanation):

11 REFUND REQUESTED BY:

TYPED/PRINTED NAME: _____ TITLE: _____

SIGNATURE: _____ PHONE: _____

OFFICE: _____

****

THIS SPACE RESERVED FOR FINANCE USE ONLY:

APPROVED: Alicia Kelly DATE: 4-25-04

Instructions for completion of this form appear on the back. After completion, attach white and yellow copies to the official file and mail or hand-carry to:

Office of Finance
Refund Branch
Crystal Park One, Room 802B

FORM PTO 1577
(01/90)

BEST AVAILABLE COPY

UNITED STATES PATENT AND TRADEMARK OFFICE

COMMISSIONER FOR PATENTS
UNITED STATES PATENT AND TRADEMARK OFFICE
P.O. BOX 1450
ALEXANDRIA, VA 22313-1450
www.uspto.gov

Paper No.

LEYDIG, VOIT & MAYER, LTD.
TWO PRUDENTIAL PLAZA, SUITE 4900
180 NORTH STETSON
CHICAGO, IL 60601-6780

COPY MAILED

JUN 03 2004

OFFICE OF PETITIONS

In re Application of :
Dunagan et al. :
Application No. 10/686,620 : Corrected
Filed: October 17, 2003 : Decision on Petition
Attorney Docket Number: :
223569 :

This is a decision in response the Petition for Grant of Filing Date and Request for Refund, filed February 24, 2004, requesting the application be accorded a filing date of October 17, 2003, including 14 sheets of drawings.

The petition is **granted**.

The application was filed on October 17, 2003. However, on February 2, 2004, the Office of Initial Patent Examination mailed a Notice of Incomplete Provisional Application, noting that a filing date had not been accorded the application because the application had been deposited without drawings.

In response, Applicant files the instant petition wherein Applicant avers that 14 sheets of drawings were originally filed with the application on October 17, 2003, and were received by this Office as evidenced by the return-receipt postcard. In support of this assertion, Applicant provides a copy of a return receipt postcard acknowledging receipt of, *inter alia*, 14 sheets of drawings on October 17, 2003.

A review of the return receipt postcard reveals that Petitioner is correct. The postcard acknowledges receipt of, *inter alia*, 14 sheets of drawings on October 17, 2003. Petitioner has also re-submitted the formal drawings with the instant petition.

Evidence of receipt of any correspondence filed in the Patent and Trademark Office can be obtained by submitting a self-addressed postcard properly itemizing and identifying the paper or papers being filed. Upon receipt of the correspondence, the Patent and Trademark Office will check the listing on the post

card against the papers submitted, making sure that all items listed are present and will then stamp the postcard with an Official date stamp and place the postcard in the outgoing mail. "A postcard receipt which itemizes and properly identifies the papers which are being filed serves as *prima facie* evidence of receipt in the PTO of all items listed thereon by the PTO." MPEP § 503.

The copy of the 14 sheets of formal drawings, supplied on February 24, 2004, will be used for examination purposes.

A refund of the petition fee has been credited to deposit account 12-1216 as authorized in the instant petition.

The application will be returned to the Office of Initial Patent Examination for further processing as a nonprovisional application with a filing date of October 17, 2003, and an indication that 14 sheets of drawings were present on filing, using the 14 sheets of drawings filed on February 24, 2004.

Telephone inquiries concerning this matter should be directed to the undersigned at (703) 305-0014.

Derek L. Woods
Petitions Attorney
Office of Petitions

UNITED STATES PATENT AND TRADEMARK OFFICE

Commissioner for Patents
United States Patent and Trademark Office
P.O. Box 1450
Alexandria, VA 22313-1450
www.uspto.gov

HARNESS DICKEY & PIERCE
PO BOX 8910
RESTON VA 20195

COPY MAILED

OCT 0 1 2004

OFFICE OF PETITIONS

In re Application of :
Herbert Bruder, Guenter Lauritsch, :
Karl Stierstorfer, Kwok Tam :
Application No. 10/686,629 : DECISION ACCORDING STATUS
Filed: October 17, 2003 : UNDER 37 CFR 1.47(a)
Attorney Docket No. 32860-000635/US

This is in response to the "PETITION UNDER 37 CFR §1.42 - 1.47 FOR ACCEPTANCE OF AN APPLICATION MISSING AN INVENTOR", filed September 2, 2004, which is being treated as a petition under 37 CFR 1.47(a).

The petition under 37 CFR 1.47(a) is **GRANTED**.

The above-identified application was filed on October 17, 2003, without a fully executed oath or declaration. Accordingly, on February 2, 2004, the Initial Patent Examination Division mailed a "Notice to File Missing Parts of Nonprovisional Application", requiring a fully executed oath or declaration as well as the surcharge for its late filing. This notice set a shortened statutory period for reply of two months.

In reply, Rule 47 applicant filed the instant petition on September 2, 2004, made timely by obtaining a five month extension of time. Accompanying the petition was a declaration executed by inventors Bruder, Lauritsch, and Stierstorfer, but with the signature block for inventor Tam left blank.

A grantable petition under 37 CFR 1.47(a) requires: (1) proof that the non-signing inventor(s) cannot be reached or refuses to sign the oath or declaration after having been presented with the application papers (specification, claims and drawings); (2) an acceptable oath or declaration in compliance with 37 CFR 1.63; (3) the petition fee; and (4) a statement of the last known address of the non-signing inventor(s).

On petition, Rule 47 applicant has included a declaration of Dr. Norbert Moritz, attesting that a copy of the application papers was forwarded to the last known address of Tam. According to Moritz, no executed declaration from Tam has been received.

On petition, Rule 47 applicant has satisfied the requirements of 37 CFR 1.47(a). The declaration submitted has been determined to be in compliance with 37 CFR 1.63. Accordingly, the above-identified application is hereby accorded Rule 1.47(a) status.

The petition fee of $130 has been charged to Deposit Account No. 08-0750.

Pursuant to 37 CFR 1.47(c), this Office will forward notice of this application's filing to the last known address provided in the petition. Notice of the filing of this application will also be published in the Official Gazette.

The application file is being forwarded to Group Art Unit 2882 for docketing and examination in due course.

Telephone inquiries related to this decision may be directed to the undersigned at (703) 305-0272.

Cliff Congo
Petitions Attorney
Office of Petitions

UNITED STATES PATENT AND TRADEMARK OFFICE

COMMISSIONER FOR PATENTS
UNITED STATES PATENT AND TRADEMARK OFFICE
P.O. BOX 1450
ALEXANDRIA, VA 22313-1450
www.uspto.gov

COPY MAILED

DEC 0 6 2006

OFFICE OF PETITIONS

HARNESS, DICKEY & PIERCE, P.L.C.
P.O.BOX 8910
RESTON, VA 20195

In re Application of :
Herbert Bruder, et al. :
Application No. 10/686,629 : ON PETITION
Filed: October 17, 2003 :
Attorney Docket No. 32860-000635/US :

This is a decision on the petition, filed May 11, 2006, to revive the above-identified application under the provisions of 37 CFR 1.137(b).

The petition is **GRANTED**.

The application became abandoned for a failure to reply in a timely manner to the Office action under Ex parte Quale, 1935 Dec. Comm'r Pat. 11 (1935), mailed April 4, 2005, which set a shortened statutory period for reply of two (2) months. A Notice of Abandonment was mailed on February 14, 2006. In response, on May 11, 2006, an amendment and the present petition were filed.

The petition is found to comply with the requirements of 37 CFR 1.137(b).

Telephone inquiries concerning this decision may be directed to the undersigned at (571) 272-3204. All other inquiries regarding this application should be directed to the Technology Center.

The application file is being forwarded to Technology Center AU 2882 for consideration of the amendment filed May 11, 2006.

Sherry D. Brinkley
Petitions Examiner
Office of Petitions

UNITED STATES PATENT AND TRADEMARK OFFICE

Commissioner for Patents
United States Patent and Trademark Office
P.O. Box 1450
Alexandria, VA 22313-1450
www.uspto.gov

MAILED

JUL 20 2007

TECHNOLOGY CENTER 2100

STAAS & HALSEY LLP
SUITE 700
1201 NEW YORK AVENUE, N.W.
WASHINGTON DC 20005

In re Application of: Saruwatari et al.
Application No. 10/686,638
Filed: October 17, 2003
For: INFORMATION PROCESSING UNIT AND INFORMATION PROCESSING METHOD

DECISION ON PETITION

This is a decision on the petition filed on June 13, 2007, under 37 CFR 1.181(a) to invoke Supervisory Authority with respect to the Office action mailed on March 19, 2007, and withdraw the finality of the office action.

The Petition is **DISMISSED as MOOT.**

RECENT PROSECUTION HISTORY

January 3, 2007	Applicant filed RCE
March 19, 2007	Final Rejection mailed.
June 13, 2007	Instant petition requesting withdrawing finality of 3/19/2007 action
June 20, 2007	Interview
June 21, 2007	Applicant filed response to final rejection above
July 3, 2007	Non-Final Rejection mailed

Petitioner filed the instant petition on June 13,2007, requesting that the finality of the office action mailed on 3/19/2007 be withdrawn, since

- the amendment submitted with the RCE contained a new claim that had not been considered before, and
- some of the references submitted with the IDS were not considered by examiner.

In the new non-final office action mailed on July 3, 2007, examiner indicates the withdrawal of finality of the office action mailed on 3/19/2007 (refer page 2 of non-final action mailed on July 3, 2007), and consideration of the references on the IDS filed on July 31, 2006 (refer PTO-1449 mailed on July 3, 2007).

Accordingly, in view of the above stated reason, the instant petition, filed under 37 CFR §1.181 to withdraw the finality of the March 19, 2007 Office action in this application, is rendered moot.

Accordingly, the Petition is **DISMISSED as moot**.

Any request for reconsideration must be filed within two months of the mailing date of this decision.

Jack Harvey, Director
Technology Center 2100
Computer Architecture, Software, and Information Security

UNITED STATES PATENT AND TRADEMARK OFFICE

Commissioner for Patents
United States Patent and Trademark Office
P.O. Box 1450
Alexandria, VA 22313-1450
www.uspto.gov

Thomas, Kayden, Horstemeyer & Risley, LLP
100 Galleria Parkway NW, Suite 1750
Atlanta, GA 30339-5948

COPY MAILED

JUL 24 2006

OFFICE OF PETITIONS

In re Application of :
Paul A.KOHL, et al. :
Application No. 10/686,697 : DECISION ON PETITION
Filed: October 16, 2003 : TO WITHDRAW
Attorney Docket No. 62020-1550 : FROM RECORD
:

This is a decision on the Request to Withdraw as attorney or agent of record under 37 C.F.R. § 1.36(b), filed April 7, 2006.

The request is **NOT APPROVED** as moot.

A review of the file record indicates that the power of attorney to Scott Horstmeyer and attorneys associated with customer number 24504 have been revoked by the addignee of the patent application on July 10, 2006. Accordingly, the request to withdraw under 37 C.F.R. § 1.36(b) is moot.

All future communications from the Office will continue to be directed to the below-listed address until otherwise notified by applicant.

Telephone inquires concerning this decision should be directed to Monica Graves at 571-272-7253.

David Bucci
Petitions Examiner
Office of Petitions

cc: The Webb Law Firm
700 Koppers Building
436 Seveth Avenue
Pittsburgh, PA 15219

UNITED STATES PATENT AND TRADEMARK OFFICE

UNITED STATES DEPARTMENT OF COMMERCE
United States Patent and Trademark Office
Address: COMMISSIONER FOR PATENTS
P.O. Box 1450
Alexandria, Virginia 22313-1450
www.uspto.gov

APPLICATION NUMBER	FILING OR 371 (c) DATE	FIRST NAMED APPLICANT	ATTY. DOCKET NO./TITLE
10/686,697	10/16/2003	Paul A. Kohl	62020-1550

CONFIRMATION NO. 7668

OC000000019709142

Paul Reznick, Esq.
THE WEBB LAW FIRM
700 Koppers Building
436 Seveth Avenue
Pittsburgh, PA 15219

Date Mailed: 07/21/2006

NOTICE OF ACCEPTANCE OF POWER OF ATTORNEY

This is in response to the Power of Attorney filed 07/10/2006.

The Power of Attorney in this application is accepted. Correspondence in this application will be mailed to the above address as provided by 37 CFR 1.33.

MONICA A GRAVES
OP (571) 272-7253

ATTORNEY/APPLICANT COPY

UNITED STATES PATENT AND TRADEMARK OFFICE

UNITED STATES DEPARTMENT OF COMMERCE
United States Patent and Trademark Office
Address: COMMISSIONER FOR PATENTS
P.O. Box 1450
Alexandria, Virginia 22313-1450
www.uspto.gov

APPLICATION NUMBER	FILING OR 371 (c) DATE	FIRST NAMED APPLICANT	ATTY. DOCKET NO./TITLE
10/686,697	10/16/2003	Paul A. Kohl	62020-1550

CONFIRMATION NO. 7668

OC000000019709047

24504
THOMAS, KAYDEN, HORSTEMEYER & RISLEY, LLP
100 GALLERIA PARKWAY, NW
STE 1750
ATLANTA, GA 30339-5948

Date Mailed: 07/21/2006

NOTICE REGARDING CHANGE OF POWER OF ATTORNEY

This is in response to the Power of Attorney filed 07/10/2006.

- The Power of Attorney to you in this application has been revoked by the assignee who has intervened as provided by 37 CFR 3.71. Future correspondence will be mailed to the new address of record(37 CFR 1.33).

MONICA A GRAVES
OP (571) 272-7253

FORMER ATTORNEY/AGENT COPY

UNITED STATES PATENT AND TRADEMARK OFFICE

UNITED STATES DEPARTMENT OF COMMERCE
United States Patent and Trademark Office
Address: COMMISSIONER FOR PATENTS
P.O. Box 1450
Alexandria, Virginia 22313-1450
www.uspto.gov

APPLICATION NUMBER	FILING OR 371 (c) DATE	FIRST NAMED APPLICANT	ATTY. DOCKET NO./TITLE
10/686,697	10/16/2003	Paul A. Kohl	62020-1550

CONFIRMATION NO. 7668

OC000000019709142

Paul Reznick, Esq.
THE WEBB LAW FIRM
700 Koppers Building
436 Seveth Avenue
Pittsburgh, PA 15219

Date Mailed: 07/21/2006

NOTICE OF ACCEPTANCE OF POWER OF ATTORNEY

This is in response to the Power of Attorney filed 07/10/2006.

The Power of Attorney in this application is accepted. Correspondence in this application will be mailed to the above address as provided by 37 CFR 1.33.

MONICA A GRAVES
OP (571) 272-7253

OFFICE COPY

UNITED STATES PATENT AND TRADEMARK OFFICE

Commissioner for Patents
United States Patent and Trademark Office
P.O. Box 1450
Alexandria, VA 22313-1450
www.uspto.gov

GRAYBEAL, JACKSON, HALEY LLP
155 - 108TH AVENUE NE
SUITE 350
BELLEVUE WA 98004-5901

COPY MAILED

JAN 0 9 2006

OFFICE OF PETITIONS

In re Application of	:	
Fischer, Nani	:	DECISION ON PETITION
Application No. 10/686,749	:	TO WITHDRAW
Filed: October 15, 2003	:	FROM RECORD
Attorney Docket No. 2249-001-03	:	

This is a decision on the Request to Withdraw as attorney or agent of record under 37 C.F.R. § 1.36(b), filed May 27, 2005.

The request is **APPROVED**.

A grantable request to withdraw as attorney/agent of record must be signed by every attorney/agent seeking to withdraw or contain a clear indication that one attorney is signing on behalf of another/others. A request to withdraw will not be approved unless at least 30 (thirty) days would remain between the date of approval and the later of the expiration date of a time to file a response or the expiration date of the maximum time period which can be extended under 37 C.F.R. § 1.136(a).

The request was signed by John M. Janeway on behalf of all attorneys of record who are associated with Customer Number 000996.

All attorneys/agents associated with the Customer Number 000996 have been withdrawn. Applicant is reminded that there is no attorney of record at this time.

The correspondence address of record has been changed and the new correspondence address is the address indicated below.

David Bucci
Petitions Examiner
Office of Petitions

Cc: MS. NANI FISCHER
444 SE MAPLE DRIVE
P.O. BOX 1469
NORTH BEND, WA 98045-1469

UNITED STATES PATENT AND TRADEMARK OFFICE

UNITED STATES DEPARTMENT OF COMMERCE
United States Patent and Trademark Office
Address: COMMISSIONER FOR PATENTS
P.O. Box 1450
Alexandria, Virginia 22313-1450
www.uspto.gov

APPLICATION NO.	FILING DATE	FIRST NAMED INVENTOR	ATTORNEY DOCKET NO.	CONFIRMATION NO.
10/686,751	10/16/2003	Michael R. Furst	A2484K-US-NP XERZ 2 01274	8683

62095 7590 05/18/2010

FAY SHARPE / XEROX - ROCHESTER
1228 EUCLID AVENUE, 5TH FLOOR
THE HALLE BUILDING
CLEVELAND, OH 44115

EXAMINER	
ESKANDARNIA, ARVIN	

ART UNIT	PAPER NUMBER
2448	

MAIL DATE	DELIVERY MODE
05/18/2010	PAPER

Please find below and/or attached an Office communication concerning this application or proceeding.

The time period for reply, if any, is set in the attached communication.

UNITED STATES PATENT AND TRADEMARK OFFICE

Commissioner for Patents
United States Patent and Trademark Office
P.O. Box 1450
Alexandria, VA 22313-1450
www.uspto.gov

MAILED

MAY 18 2010

DIRECTOR OF
TECHNOLOGY CENTER 24

FAY SHARPE / XEROX - ROCHESTER
1228 EUCLID AVENUE, 5TH FLOOR
THE HALLE BUILDING
CLEVELAND OH 44115

In re Application of: Michael R. FURST et al.
Application No. 10/686,751
Filed: Oct 16, 2003
For: METHOD AND APPARATUS FOR ENABLING DISTRIBUTED SUBSCRIPTION SERVICES, SUPPLIES MAINTENANCE, AND DEVICE-INDEPENDENT SERVICE IMPLEMENTATION

DECISION ON PETITION UNDER 37 C.F.R. § 1.181

This is a decision on the petition, filed April 6, 2010, under 37 CFR § 1.181 to reconsider and reverse the examiner's premature Final rejection mailed Feb 17, 2010.

The petition is **DISMISSED**.

On April 6, 2010, applicant's counsel filed a petition to the Director under 37 CFR § 1.181 to seek relief from actions of the examiner Arvin Eskandarnia and SPE Firmin Backer in relation to the Final office action mailed Feb 17, 2010.

In the petition, applicant's counsel alleged that the examiner's Final Action "is not completely responsive" and the Advisory Action of March 23, 2010 "includes new grounds of rejection" not necessitated by amendment; thus, rendered the Final office action mailed Feb 17, 2010 premature.

MPEP § 706.07(a) states in part that:

> Under present practice, second or any subsequent action on the merits ***shall*** be made final, except where the examiner introduces a new ground of rejection not necessitated by amendment of the application by the applicant, whether or not the prior art is already of record.

MPEP § 706.07(d) states in part that:

> If, on request by applicant for reconsideration, the primary examiner finds the final rejection to have been premature, he or she should withdraw the finality of the rejection. Once the finality of the Office action has been withdrawn, the next Office action may be made final if the conditions set forth in MPEP § 706.07(a) are met.

MPEP § 1201 states, in part:

> The line of demarcation between appealable matters for the Board of Patent Appeals and Interferences (Board) and petitionable matters for the Director of the U.S. Patent and Trademark Office (Director) should be carefully observed. The Board will not ordinarily hear a question that should be decided by the Director on petition, and the Director will not ordinarily entertain a petition where the question presented is a matter appealable to the Board ...

A review of the prosecution history in the instant application and the petition indicates that there is a disagreement between the examiner and applicant's counsel on how to interpret various terms such as "interchange device model", "a device model agent", "physical add-on" and the manner in which the examiner interprets the claims and whether the reference(s) read on the claim limitations of claims 26-44. The Final Action of Feb 17, 2010 *repeats the rejections of claims 26-44 in the previous Non Final action (dated August 10, 2009)* and includes a response to arguments. The Final Action of Feb 17, 2010 is therefore proper since no new ground of rejections were introduced in the rejections of claims 26-44. The Advisory maintains the finality of the last Office Action and provides further explanation/response to arguments of the After Final request for reconsideration filed March 15, 2010. Thus, it is apparent that such a disagreement regarding claim interpretation and rejection is **appealable, not a petitionable matter**.

Pursuant to MPEP § 1201, the petition is **DISMISSED.**

Further, pursuant to 37 C.F.R. § 1.181(f), the shortened statutory period for reply is continued to run three months from the mailing date of the Final Office Action.

Any inquiry concerning this decision should be directed to Kim Huynh whose telephone number is (571) 242-4147.

Jack Harvey, Director
Technology Center 2400
Network, Multiplexing, Cable and Security

UNITED STATES PATENT AND TRADEMARK OFFICE

UNITED STATES DEPARTMENT OF COMMERCE
United States Patent and Trademark Office
Address: COMMISSIONER FOR PATENTS
P.O. Box 1450
Alexandria, Virginia 22313-1450
www.uspto.gov

APPLICATION NO.	FILING DATE	FIRST NAMED INVENTOR	ATTORNEY DOCKET NO.	CONFIRMATION NO.
10/686,756	10/16/2003	James Norman Barshinger	132226	8695

6147 7590 08/01/2007

GENERAL ELECTRIC COMPANY
GLOBAL RESEARCH
PATENT DOCKET RM. BLDG. K1-4A59
NISKAYUNA, NY 12309

EXAMINER	
SHAH, SAMIR M	

ART UNIT	PAPER NUMBER
2856	

MAIL DATE	DELIVERY MODE
08/01/2007	PAPER

Please find below and/or attached an Office communication concerning this application or proceeding.

The time period for reply, if any, is set in the attached communication.

UNITED STATES PATENT AND TRADEMARK OFFICE

Commissioner for Patents
United States Patent and Trademark Office
P.O. Box 1450
Alexandria, VA 22313-1450
www.uspto.gov

In re Application of BARSHINGER ET AL.
Appl. No.: 10/686,756
Filed: October 16, 2003
For: TWO DIMENSIONAL PHASEED ARRAYS FOR VOLUMETRIC ULTRASONIC INSPECTION AND METHOD OF USE

DECISION ON PETITION
37 CFR 1.48(a)

In view of the papers filed June 15, 2007, it has been found that this non-provisional application, as filed, through error and without deceptive intent, improperly set forth the inventorship, and accordingly, this application has been corrected in compliance with 37 CFR 1.48(a). The inventorship of this application has been changed by the addition of **Michael John Danylux, Patrick Joseph Howard, and David Charles Copley** as co-inventors.

Hezron E. Williams,
Supervisory Patent Examiner,
Patent Examining Technology Center 2800

GENERAL ELECTRIC COMPANY
GLOBAL RESEARCH
PATENT DOCKET RM. BLDG. K1-4A59
NISKAYUNA, NY 12309

UNITED STATES PATENT AND TRADEMARK OFFICE

Commissioner for Patents
United States Patent and Trademark Office
P.O. Box 1450
Alexandria, VA 22313-1450
www.uspto.gov

GENE SCOTT; PATENT LAW & VENTURE GROUP
3140 RED HILL AVENUE
SUITE 150
COSTA MESA, CA 92626-3440

COPY MAILED

OCT 0 5 2004

OFFICE OF PETITIONS

ON PETITION

In re Application of :
Richard Caso and Brand Caso :
Application No. 10/686,757 :
Filed: October 15, 2003 :
Attorney Docket No. Caso.R-01 :

This is a decision on the petition filed May 20, 2004, to establish that page 14 of the specification and Figure 1 and 2 of the drawings were part of the originally filed application. The Office is also treating the paper as a petition to establish that page 1 of the specification, and an abstract were part of the originally filed application.

The petition is **granted**.

On October 15, 2003, the application was filed.

The Office subsequently returned a postcard to applicant verifying the receipt of 20 pages of "Specification, Claims, and Abstract" and 3 sheets of "Formal Drawings."[1]

Prior to scanning the papers for the creation of the electronic file wrapper, an employee at the Office completed a form which stating that 14 pages of specification, 5 pages of claims, 1 page of abstract, and 7 pages of drawings were present.

The electronic file wrapper contains 12 pages of specification - pages 2-13. The Office presumes page 1 was a cover sheet. The electronic file wrapper contains 5 pages of claims. The electronic file wrapper does not contain an abstract. The electronic file wrapper only contain 2 pages of drawings which include Figures 3-8.

Consideration of *both* the postcard receipt and the pre-scanning notes indicates the Office received the following papers on May 20, 2004:
(1) a page (page 14) which included claims 1, 2, and 3,
(2) a page of abstract,
(3) a page 1 of the specification (presumably a cover page),
(4) a page of drawings including Figures 1 and 2.

The evidence establishes the above listed papers were misplaced by the Office subsequent to the filing of the application.

---

[1] Evidence of receipt of any correspondence filed in the Patent and Trademark Office can be obtained by submitting a self addressed post card properly itemizing and identifying the paper or papers being filed. Upon receipt of the correspondence, the Patent and Trademark Office will check the listing on the post card against the papers submitted, making sure that all items listed are present and will then stamp the postcard with an Official date stamp and place the post card in the outgoing mail. "A post card receipt which itemizes and properly identifies the papers which are being filed serves as *prima facie* evidence of receipt in the PTO of all items listed thereon by the PTO." M.P.E.P. § 503.

Since a copy of page 1 has not been submitted, the Office cannot process the application using that page. *If* petitioner desires for that page to be part of the application, a new petition should be filed along with a copy of page 1.

A refund of the $130 petition fee to petitioner's credit card will be scheduled.

The Notice mailed was sent in error and is hereby vacated to the extent it indicates page 14 of the specification and Figures 1 and 2 were missing.

The Notice required the submission of a signed oath or declaration. The postcard appears to indicate a signed declaration was filed with the original application. However petitioner does not explicitly address the issue and a copy of the original declaration has not been submitted. A new declaration has been submitted. Since the first declaration of record, the new declaration, was filed after the filing date of the application, the $65 surcharge has been charged to petitioner's credit card.

The Office of Initial Patent Examination will be notified to for further process the application with a filing date of October 15, 2003, using the application papers filed on October 15, 2003, and the copy of the page containing claims 1, 2, and 3, the drawing page containing Figures 1 and 2, and one page of abstract filed on May 20, 2004.

Telephone inquiries should be directed to Petitions Attorney Steven Brantley at (703) 306-5683.

Charles Steven Brantley
Petitions Attorney
Office of Petitions

UNITED STATES PATENT AND TRADEMARK OFFICE

Commissioner for Patents
United States Patent and Trademark Office
P.O. Box 1450
Alexandria, VA 22313-1450
www.uspto.gov

Date : April 7, 2007

Patent No. : 7,092,335 B2
Inventor(s) : Horie
Serial No. : 10/686760
Issued : Aug. 15, 2006
Title : **DATA RECORDING OR ERASING METHOD FOR AN OPTICAL RECORDING MEDIUM**
Docket No. :

Re: Request for Certificate of Correction

Consideration has been given your request for the issuance of a certificate of correction for the above-identified patent under the provisions of 37 CFR 1.322 and/or 1.323.

Assignees' names and addresses (assignment data) printed in a patent are based *solely* on information supplied in the appropriate space for identifying the assignment data, i.e., item 3 of the Fee(s) Transmittal Form PTOL-85B. After payment of the issue fee, correction of assignment data submitted on the PTOL-85B can only be done by Certificate of Correction under 37 CFR 1.323, with a request under 37 CFR 3.81(b).

A request for a patent to be corrected to state the name of the assignee must:

A. state that the assignment was submitted for recordation as set forth in 37 CFR 3.11 before issuance of the patent;
B. include a request for a certificate of correction under 37 CFR 1.323 along with the fee set forth in 37 CFR 1.20(a); and
C. include the processing fee set forth in 37 CFR 1.17(i).

If the request is granted, Certificates of Correction Branch will be notified that a Certificate of Correction may be issued.

See Manual of Patent Examining Procedure, Section 1481.01 (Rev. 3) (Oct. 2005).

Applicant has not included items A and or C above, accordingly, the request for Certificate of Correction to add or change the assignee data is denied.

Any request under 37 CFR 3.81(b) should be directed to the following address or facsimile number:

By mail:	Mail Stop PETITIONS Commissioner for Patents Post Office Box 1450 Alexandria, VA 22313-1450
By hand:	Customer Service Window Mail Stop Petitions Randolph Building 401 Dulany Street Alexandria, VA 22314
By fax:	571-273-8300 ATTN: Office of Petitions

If a fee (currently $100) was previously submitted for consideration of a Request for Certificate of Correction, under CFR 1.323, to correct assignment data, no additional fee is required.

Elisha Evans
For Cecelia Newman
Decisions & Certificates
of Correction Branch
(703) 308-9390 ext. 110

KATTEN MUCHIN ROSENMAN LLP
575 MADISON AVENUE
NEW YORK NY 10022-2585

CBN/eme

UNITED STATES PATENT AND TRADEMARK OFFICE

Commissioner for Patents
United States Patent and Trademark Office
P.O. Box 1450
Alexandria, VA 22313-1450
www.uspto.gov

Date : 11/28/07

Patent No. : 7092335 B2
Application No : 10/686760
Inventor(s) : Horie
Issued : August 15, 2006
Title : **DATA RECORDING OR ERASING METHOD FOR AN OPTICAL RECORDING MEDIUM**
Docket No. :

Re: Request for Certificate of Correction

Consideration has been given your request for the issuance of a certificate of correction for the above-identified patent under the provisions of 37 CFR 1.322 and/or 1.323.

Assignees' names and addresses (assignment data) printed in a patent are based *solely* on information supplied in the appropriate space for identifying the assignment data, i.e., item 3 of the Fee(s) Transmittal Form PTOL-85B. After payment of the issue fee, correction of assignment data submitted on the PTOL-85B can only be done by Certificate of Correction under 37 CFR 1.323, with a request under 37 CFR 3.81(b).

A request for a patent to be corrected to state the name of the assignee must:

A. state that the assignment was submitted for recordation as set forth in 37 CFR 3.11 before issuance of the patent;
B. include a request for a certificate of correction under 37 CFR 1.323 along with the fee set forth in 37 CFR 1.20(a); and
C. include the processing fee set forth in 37 CFR 1.17(i).

If the request is granted, Certificates of Correction Branch will be notified that a Certificate of Correction may be issued.

See Manual of Patent Examining Procedure, Section 1481.01 (Rev. 3) (Oct. 2005).

Applicant has not included items A and or C above, accordingly, the request for Certificate of Correction to add or change the assignee data is denied.

Any request under 37 CFR 3.81(b) should be directed to the following address or facsimile number:

By mail:	Mail Stop PETITIONS Commissioner for Patents Post Office Box 1450 Alexandria, VA 22313-1450
By hand:	Customer Service Window Mail Stop Petitions Randolph Building 401 Dulany Street Alexandria, VA 22314
By fax:	571-273-8300 ATTN: Office of Petitions

If a fee (currently $100) was previously submitted for consideration of a Request for Certificate of Correction, under CFR 1.323, to correct assignment data, no additional fee is required.

Elisha Evans
For Cecelia Newman
Decisions & Certificates
of Correction Branch
(703) 308-9390 ext. 110

KATTEN MUCHIN ROSENMAN LLP
575 MADISON AVENUE
NEW YORK NY 10022-2585

CBN/eme

UNITED STATES PATENT AND TRADEMARK OFFICE

Commissioner for Patents
United States Patent and Trademark Office
P.O. Box 1450
Alexandria, VA 22313-1450
www.uspto.gov

KATTEN MUCHIN ROSENMAN LLP
575 MADISON AVENUE
NEW YORK NY 10022-2585

MAILED

JUL 27 2009

OFFICE OF PETITIONS

In re Patent No. 7,092,335 :
Issue Date: August 15, 2006 :
Application 10/686,760 : ON PETITION
Filed: October 15, 2003 :
Attorney Docket No. SAN 18.676A (100946-00056 :

This is a decision on the petition under 37 CFR 1.183, filed, June 22, 2009, which is being treated as a request under 37 CFR 3.81(b)[1] to correct the assignee's name on the Fee(s) Transmittal form PTOL-85(b) by way of a certificate of correction in the patent to be issued from the above-identified application.

The request is **GRANTED**.

Petitioner states that the correct assignee's name is "Mitsubishi Kagaku Media Co., Ltd., Tokyo (JP)" and that the incorrect assignee's name was included on the Fee(s) Transmittal form PTOL-85(b) at the time of payment of the issue fee. Accordingly, petitioner requests that a certificate of correction be issued to reflect the correct assignee on the front page of the Letters Patent in the patent to be issued from the application.

[1] *See* MPEP 1309, subsection II; and Official Gazette of June 22, 2004.

37 CFR 3.81(b), effective June 25, 2004, reads:

> *After payment of the issue fee:* Any request for issuance of an application in the name of the assignee submitted after the date of payment of the issue fee, and any request for a patent to be corrected to state the name of the assignee, must state that the assignment was submitted for recordation as set forth in § 3.11 before issuance of the patent, and must include a request for a certificate of correction under § 1.323 of this chapter (accompanied by the fee set forth in § 1.20(a) and the processing fee set forth in § 1.17(i) of this chapter.

The request was accompanied by a certificate of correction (and fee) as required by 3.81(b). Further, Office assignment records reflect that "Mitsubishi Kagaku Media Co., Ltd., Tokyo (JP)" is the assignee of record. Accordingly, as the request complies with the provisions of 37 CFR 3.81(b), it would be appropriate for a certificate of correction to be processed after issuance of this application into a patent.

Telephone inquiries concerning this decision may be directed to the JoAnne Burke at (571) 272-4584. Inquiries regarding the issuance of a certificate of correction should be directed to the Certificate of Correction Branch at (571) 272-4200.

As authorized, the $130 fee for the petition under 37 CFR 3.81(b) and $100 fee for Request for Certificate of Correction has been assessed to petitioner's deposit account.

The Certificates of Correction Branch will be notified of this decision granting the petition under 37 CFR 3.81(b) and directing issuance of the requested Certificate of Correction.

JoAnne Burke
Petitions Examiner
Office of Petitions

BEST AVAILABLE COPY

UNITED STATES PATENT AND TRADEMARK OFFICE

Commissioner for Patents
United States Patent and Trademark Office
P.O. Box 1450
Alexandria, VA 22313-1450
www.uspto.gov

MCDERMOTT, WILL & EMERY
600 13th Street, N.W.
Washington DC 20005-3096

COPY MAILED

MAY 1 8 2004

OFFICE OF PETITIONS

In re Application of
Humayun et al.
Application No.10/686,775
Filed: October 17, 2003
Attorney Docket No. 38530-017

DECISION REFUSING STATUS
UNDER 37 CFR 1.47(a)

This is in response to the petition under 37 CFR § 1.47(a), filed March 16, 2004.

The petition under 37 CFR. § 1.47(a) is **DISMISSED**.

Rule 47 applicant is given TWO MONTHS from the mailing date of this decision to reply, correcting the below-noted deficiencies. Any reply should be entitled "Request for Reconsideration of Petition Under 37 CFR. § 1.47(a)," and should only address the deficiencies noted below, except that the reply may include an oath or declaration executed by the non-signing inventor. **Failure to respond will result in abandonment of the application**. Any extensions of time will be governed by 37 CFR. §1.136(a).

The above-identified application was filed on October 17, 2003, without an executed oath or declaration. Accordingly, on January 16, 2004, applicant was mailed a "Notice to File Missing Parts of Nonprovisional Application - Filing Date Granted," requiring for the purposes of this decision an executed oath or declaration in compliance with § 1.63, and a surcharge for its late filing. This Notice set an extendable two-month period for reply of March 16, 2004.

In reply, applicant filed a petition, the surcharge for late filing of the declaration, and a partially executed declaration. In support of the petition, applicants submitted copies of correspondence which was mailed to the non-signing inventor's legal representative as well as the declaration of Kelli N. Watson .

A grantable petition under 37 CFR. § 1.47(a) requires: (1) proof that the non-signing inventor cannot be reached or refuses to sign the oath or declaration after having been presented with the application papers (specification, claims and drawings); (2) an acceptable oath or declaration in compliance with 35 U.S.C. §§ 115 and 116; (3) the petition fee; and (4) a statement of the last known address of the non-signing inventor. The instant petition does not satisfy requirement (2).

BEST AVAILABLE COPY

As to item (2), the declaration submitted is not in compliance with 37 CFR 1.63 . Rule 47 applicant failed to provide the citizenship and mailing addresses of all of the inventors pursuant to 37 CFR 1.63 (a)(3)and (c)(1). Specifically, petitioner failed to provide the address and citizenship of inventor Scribner. Upon renewed petition, a executed oath or declaration with all inventors information must be provided. It should be noted there should not be two "first inventors".

In addition the declaration executed by Inventor Humayun contains non-dated/non-initialed alterations to the signature block. Such alterations render the declaration unacceptable. A newly executed declaration for inventor Humayun is required.

Further correspondence with respect to this matter should be addressed as follows:

By mail:	Mail Stop Petition Commissioner for Patents P.O. Box 1450 Alexandria, VA 22313-1450
By facsimile:	(703) 872-9306
By delivery service: (FedEx, UPS, DHL, etc.)	U.S. Patent and Trademark Office 2011 South Clark Place Customer Window, Mail Stop Petition Crystal Plaza Two, Lobby, Room 1B03 Arlington, VA 22202

Telephone inquiries related to this decision may be directed to the undersigned at (703) 306-0251.

Charlema R. Grant
Petitions Attorney
Office of Petitions

UNITED STATES PATENT AND TRADEMARK OFFICE

Commissioner for Patents
United States Patent and Trademark Office
P.O. Box 1450
Alexandria, VA 22313-1450
www.uspto.gov

Morgan Lewis & Bockuis LLP
1111Pennsylvania Avenue NW
Washington, DC 20004

COPY MAILED

AUG 18 2006

OFFICE OF PETITIONS

In re Application of :
S. LYONS et al. :
Application No. 10/686,782 : DECISION ON PETITION
Filed: October 17, 2003 : TO WITHDRAW
Attorney Docket No. 051530-5004-02 : FROM RECORD
:

This is a decision on the Request to Withdraw as attorney or agent of record under 37 C.F.R. § 1.36(b), filed April 19, 2006.

The request is **NOT APPROVED** as moot.

A review of the file record indicates that the power of attorney to Robert Smyth has been revoked by the assignee of the patent application on June 15, 2006. Accordingly, the request to withdraw under 37 C.F.R. § 1.36(b) is moot.

All future communications from the Office will continue to be directed to the below-listed address until otherwise notified by applicant.

Telephone inquires concerning this decision should be directed to Monica A. Graves at 571-272-7253.

Amelia Au
Petitions Examiner
Office of Petitions

cc: Choate, Hall & Stewart LLP
Two International Place
Boston, MA 02110

UNITED STATES PATENT AND TRADEMARK OFFICE

UNITED STATES DEPARTMENT OF COMMERCE
United States Patent and Trademark Office
Address: COMMISSIONER FOR PATENTS
P.O. Box 1450
Alexandria, Virginia 22313-1450
www.uspto.gov

APPL NO.	FILING OR 371 (c) DATE	ART UNIT	FIL FEE REC'D	ATTY.DOCKET NO	DRAWINGS	TOT CLMS	IND CLMS
10/686,807	10/15/2003	2873	770	1232-5174	27	18	2

CONFIRMATION NO. 7927

CORRECTED FILING RECEIPT

27123
MORGAN & FINNEGAN, L.L.P.
345 PARK AVENUE
NEW YORK, NY 10154

OC000000011941986

Date Mailed: 02/20/2004

Receipt is acknowledged of this regular Patent Application. It will be considered in its order and you will be notified as to the results of the examination. Be sure to provide the U.S. APPLICATION NUMBER, FILING DATE, NAME OF APPLICANT, and TITLE OF INVENTION when inquiring about this application. Fees transmitted by check or draft are subject to collection. Please verify the accuracy of the data presented on this receipt. **If an error is noted on this Filing Receipt, please write to the Office of Initial Patent Examination's Filing Receipt Corrections, facsimile number 703-746-9195. Please provide a copy of this Filing Receipt with the changes noted thereon. If you received a "Notice to File Missing Parts" for this application, please submit any corrections to this Filing Receipt with your reply to the Notice. When the USPTO processes the reply to the Notice, the USPTO will generate another Filing Receipt incorporating the requested corrections (if appropriate).**

Applicant(s)

Akira Yamamoto, Tokyo, JAPAN;

Domestic Priority data as claimed by applicant

Foreign Applications

JAPAN 2002-303442 10/17/2002

If Required, Foreign Filing License Granted: 01/15/2004

Projected Publication Date: 04/22/2004

Non-Publication Request: No

Early Publication Request: No

Title

Scanning type display optical system

Preliminary Class

359

LICENSE FOR FOREIGN FILING UNDER
Title 35, United States Code, Section 184
Title 37, Code of Federal Regulations, 5.11 & 5.15

GRANTED

The applicant has been granted a license under 35 U.S.C. 184, if the phrase "IF REQUIRED, FOREIGN FILING LICENSE GRANTED" followed by a date appears on this form. Such licenses are issued in all applications where the conditions for issuance of a license have been met, regardless of whether or not a license may be required as set forth in 37 CFR 5.15. The scope and limitations of this license are set forth in 37 CFR 5.15(a) unless an earlier license has been issued under 37 CFR 5.15(b). The license is subject to revocation upon written notification. The date indicated is the effective date of the license, unless an earlier license of similar scope has been granted under 37 CFR 5.13 or 5.14.

This license is to be retained by the licensee and may be used at any time on or after the effective date thereof unless it is revoked. This license is automatically transferred to any related applications(s) filed under 37 CFR 1.53(d). This license is not retroactive.

The grant of a license does not in any way lessen the responsibility of a licensee for the security of the subject matter as imposed by any Government contract or the provisions of existing laws relating to espionage and the national security or the export of technical data. Licensees should apprise themselves of current regulations especially with respect to certain countries, of other agencies, particularly the Office of Defense Trade Controls, Department of State (with respect to Arms, Munitions and Implements of War (22 CFR 121-128)); the Office of Export Administration, Department of Commerce (15 CFR 370.10 (j)); the Office of Foreign Assets Control, Department of Treasury (31 CFR Parts 500+) and the Department of Energy.

NOT GRANTED

No license under 35 U.S.C. 184 has been granted at this time, if the phrase "IF REQUIRED, FOREIGN FILING LICENSE GRANTED" DOES NOT appear on this form. Applicant may still petition for a license under 37 CFR 5.12, if a license is desired before the expiration of 6 months from the filing date of the application. If 6 months has lapsed from the filing date of this application and the licensee has not received any indication of a secrecy order under 35 U.S.C. 181, the licensee may foreign file the application pursuant to 37 CFR 5.15(b).

UNITED STATES PATENT AND TRADEMARK OFFICE

Commissioner for Patents
United States Patent and Trademark Office
P.O. Box 1450
Alexandria, VA 22313-1450
www.uspto.gov

RATNER PRESTIA
P.O. BOX 980
VALLEY FORGE PA 19482

3/13/08

In re Application of:
Chobotov, Michael V. et al.
Serial No. 10/686,863
Filed: Oct. 16, 2003
Docket: 021630-000522US
Title: DELIVERY SYSTEM AND METHOD FOR BIFURCATED GRA

DECISION ON PETITION
UNDER 37 CFR § 1.181

This is a decision on the petition filed Oct. 3, 2007 petitioning the Technology Center Director under 37 CFR § 1.181 for supervisory review and withdrawal of the requirement under 37 CFR § 1.105. No fee is due.

The petition is dismissed.

Background

The Examiner assigned to the application mailed a 37 CFR § 1.105 requirement to Applicants on May 3, 2007 requiring Applicants to disclose all co-pending applications and related patents to the application being examined and identify the specific claims of those applications and/or patents which may present double patenting issues with the instant application claims. Examiner cited ten applications and seventeen patents that Examiner is presently aware of and believes may be related and have overlapping subject matter. Examiner makes the requirement on the basis that Applicants or the assignee are presumably far more cognizant of the contents of the claims in these applications than any Office staff, and has access to the source documents by which comparisons could be done better than within the Office for the Examiner to thereby determine the commonality among the claims by this information.

Applicants responded on Jul. 5, 2007 with a response and a supplemental IDS stating that:

..... the Office Action is requesting information beyond that which is required under 37 CFR §1.105. As set forth in MPEP §704.11, 35 CFR 1.105 is drafted "to make it clear that it is facts and factual information, that are known to applicant, or readily obtained after reasonable inquiry by applicant, that are sought, and that requirements under 37 CFR §1.105 are not requesting opinions that may be held or would be required to be formulated by applicant." (emphasis added). Identification of specific claims in those applications and/or patents which may present double patenting issues with the instant application claims is clearly opinion which is not required under 37 CFR §1.105.

On Aug. 24, 2007, in response, Examiner mailed a reply informing the Applicants that Applicants had failed to provide a listing of claims relevant to the possible double patenting issue. The applicant was reminded that the period to comply with Rule 105 requirement from the previous Office action of May 3, 2007 remains unchanged.

Applicants responded on Oct. 3, 2007, with a response, stating,

In response to the requirement to identify the specific claims of those applications and/or patents which may present double patenting issues with the instant application claims, Applicants respectfully submit that any of the claims in any of the applications or patents identified in the May 3, 2007 Office Action or in the July 5, 2007 Reply may present double patenting issues with the instant application claims by virtue of such applications or patents having a common inventor with the present application. Applicants do not make any comments as to whether any of these claims do or do not present a double patenting issue. With the identification of such applications and patents, the Examiner has all of the information necessary to review the claims and make a determination if double patenting exists with respect to any claims. In view of Applicants' identification of such patents and applications, and Applicants' submission of this known and reasonably available factual information, Applicants respectfully submit that this Response is fully responsive to every appropriate request in the Office Action. With respect to the example double patenting rejections not being addressed, Applicants respectfully note that a double patenting rejection has not been raised in any Office Action to date. Upon receipt of an Office Action rejecting any claim based on double patenting, Applicants will address such with an appropriate response. If the Examiner believes other factual information is necessary to the examination, the Examiner is invited to issue a follow up requirement setting forth the specific factual information being required, the form the required information is to take, and how the information is necessary to the examination as set forth in MPEP §704.14(a).

On Oct. 3, 2007, the current petition was filed. In particular, Applicants submits that Examiner's requirement for a listing of claims relevant to the possible double patenting issue is beyond the scope 37 CFR § 1.105. Applicants state that Examiner is requiring more than facts or factual information as intended by 37 CFR § 1.105, but is instead requiring an opinion by requiring an evaluation of the claims of any of the listed and to be listed applications and patents that may be related with respect to statutory or obviousness-type double patenting.

Discussion

In the instant case, Applicants' Jul. 5, 2007 response to Examiner's 37 CFR 1.105 Requirement failed to provide a listing of claims relevant to the possible double patenting issue. Thus, Appplicants' response was an incomplete reply and Examiner issued a non-responsive letter. In the petition, petitioner argues that to the extent the Supplemental Response is deemed to be not fully responsive, that this additional requirement in the May 3, 2007 Office Action (requiring Applicants to identify specific claims) is requesting information beyond that which is required under 37 CFR§1.105. Petitioner also argues that requirements under 37 CFR §1.105 are not requesting opinions that may be held or would be required to be formulated by applicant. Identification of specific claims in those applications and/or patents which may present double patenting issues with the instant application claims is clearly opinion that would be required to be formulated, which is not required under 37 CFR 1.105. With the list of related applications and the patents listed in the IDS statements and the additional published applications and patents identified in the Response of Jul 5, 2007, petitioner opines that the Office has available to it all the information that is necessary to review the claims of the various applications and patents and make any double patenting determinations. The Office is fully capable of examining the various claims and making determinations of double patenting. The required information is

not necessary for the Office to proceed with such examination. Since the Office Action is requesting information which is not necessary for examination and which is not factual information, but instead opinion which is not required under 37 C.F.R. §1.105, and to any extent that Applicants' Supplemental Response is not deemed to be fully responsive, Applicants respectfully submit that the Requirement under 35 C.F.R. 1.105 is improper and should be withdrawn.

This line of argument is unconvincing. With respect to Appplicants' claim that Examiner's requirement for a listing of claims relevant to the possible double patenting issue is beyond the scope of 37 CFR § 1.105, M.P.E.P. 704.11 states, in part,

The terms "factual" and "facts" are included in 37 CFR § 1.105 to make it clear that it is facts and factual information, that are known to applicant, or readily obtained after reasonable inquiry by applicant, that are sought, and that requirements under 37 CFR § 1.105 are not requesting opinions that may be held or would be required to be formulated by applicant...

The purpose of 37 CFR § 1.105 is to improve patent quality, and render better decisions, and not to put applicants in jeopardy of meeting their duties of candor and good faith in their replies to a requirement for information."

From a recent Federal Circuit decision:

Scope of information that may be required from applicant by patent examiner pursuant to 37 C.F.R. §1.105 encompasses information relevant to patent examination either procedurally or substantively, and includes zone of information beyond that defined by 37 C.F.R. §1.56 as material to patentability, and beyond that which is directly useful to support rejection or conclusively decide issue of patentability, since Section 1.105(a)(1) states that PTO may "require the submission ... of such information as may be reasonably necessary to properly examine or treat the matter"[.] Star Fruits S.N.C. v. United States, 393 F.3d 1277, 73 USPQ2d 1409 (Fed. Cir. 2005).

Duty of candor embodied in 37 C.F.R. §1.56 does not give patent applicant power to refuse requirement for information under 37 C.F.R. §1.105, since neither regulation states that response to such requirement may be limited, at applicant's discretion, to whatever applicant believes it might be affirmatively required to submit under Section 1.56, since language in Section 1.105(a)(1), which permits PTO to "require the submission ... of such information as may be reasonably necessary to properly examine or treat the matter," expressly states that PTO, not applicant, controls scope of requirement for information, and since scope of information that may be required under Section 1.105 is broader than information that applicant is duty bound to provide under Section 1.56. Star Fruits S.N.C. v. United States, 393 F.3d 1277, 73 USPQ2d 1409 (Fed. Cir. 2005).

United States Patent and Trademark Office can use requirement for information under 37 C.F.R. §1.105 to compel disclosure of information that patent examiner deems pertinent to patentability, even if applicant disagrees with examiner concerning significance of information to ultimate question of whether application discloses patentable subject matter, since PTO is clearly entitled to use Section 1.105 to seek information that may support rejection, and since examiner is charged with duty of deciding whether patent should issue from application, and so long as examiner's request for information is not arbitrary or capricious, applicant cannot impede examiner's performance of that duty by refusing to comply with information requirement that proceeds from examiner's view of scope of law to be applied to application. Star Fruits S.N.C. v. United States, 393 F.3d 1277, 73 USPQ2d 1409 (Fed. Cir. 2005).

If an applicant were required to make an admission that the claims of one application or patent read on the claims of another, it would appear that this would be beyond the scope of 37 CFR § 1.105. However, in the present situation, Applicants are not being asked this but to identify claims that *may* present double patenting issues. Applicants would be making comparisons to

identify similarities in the claims. This is not an admission that the claims conflict. Examiner still will determine this. Applicants would be identifying observed facts and then Examiner would render an opinion from these facts. Thus, an opinion from Appplicants is not being required.

Nevertheless, it appears that the Court considers forms of opinion relevant and within the authority of the Examiner to require.

...Other requirements for information are also foreseeable under the "reasonably necessary to properly examine or treat the matter" standard. For instance, it might be reasonably necessary for the Office to require an explanation of technical material in a publication, such as one of the inventor's publications, or require the applicant's *comments* on a recent Federal Circuit opinion and how that opinion affects examination. ... The final rule permits that "the examiner or other Office employee may *require the submission* ... of such information as may be reasonably necessary to properly examine or treat the matter." 37 C.F.R. 1.105(a)(1) [emphasis added] Star Fruits S.N.C. v. United States, 393 F.3d 1277, 73 USPQ2d 1409 (Fed. Cir. 2005).

Through notice and comment rulemaking the Office made explicit the inherent authority of Office employees to require information from an applicant. The goal is to "encourage" employees to use that power to "perform the best quality examination possible." Star Fruits S.N.C. v. United States, 393 F.3d 1277, 73 USPQ2d 1409 (Fed. Cir. 2005).

Opinion is clearly permitted to the extent it may define viable information. This is not different from an applicant citing a reference for consideration before the examiner, as this is an opinion as to what is believed material to patentability under 37 CFR § 1.56. The examiner considers that reference and ultimately determines whether that reference is to be applied against the claims. When the examiner requires a submission of information under 37 CFR § 1.105 that may be material to patentability, the examiner is still making the ultimate decision based on the submission whether that material is applicable. The examiner has required this information because it "improve[s] patent quality, and render[s] better decisions" (MPEP 704.11).

Thus, according to M.P.E.P. 704.11 and the Federal Circuit Court, Examiner's requirement for a listing of claims relevant to the possible double patenting issue is within the scope of 37 CFR § 1.105. The listing requirement is further supported by the Court's implications that forms of opinion may be relevant and within the authority of the Examiner to require if it is providing material information.

In the instant case, Appplicants timely filed a response to Examiner's May 3, 2007 37 CFR § 1.105 Requirement on Jul. 5, 2007. Because Applicant failed to comply with the Rule 1.105 requirement, on Aug. 24, 2007, Examiner sent a letter informing Applicants that the response of Jul. 5, 2007 was not fully responsive. The Applicants were also informed that since the period of reply set forth in the prior Office action has expired, this application will become abandoned unless applicant corrects the deficiency and obtains an extension of time under 37 CFR 1.136(a). Applicants' second reply of Oct. 3, 2007 with three-month extension of time did not perfect the required response. Therefore, the time period for response will continue to run from the mail date of the previous Office action of May 3, 2007. Because the mail date of the previous Office action is May 3, 2007 and the applicant paid a three-month extension fee, the application became abandoned on Nov. 5, 2007.

Conclusion

Ultimately, the purpose in requiring Applicants to identify claims in the identified and yet to be identified related applications and patents is to improve the quality of examination by the examiner with respect to statutory and obviousness-type double patenting particularly in view of the significant number of applications and patents involved. In view thereof, the examiner's requirement is not seen as unreasonable and is seen as within the scope of 37 CFR § 1.105.

PETITION DISMISSED.

Any inquiry regarding this decision should be directed to Henry Yuen, Special Programs Examiner, at (571) 272-3468.

for Karen M. Young

Frederick R. Schmidt, Director
Technology Center 3700

UNITED STATES PATENT AND TRADEMARK OFFICE

Commissioner for Patents
United States Patent and Trademark Office
P.O. Box 1450
Alexandria, VA 22313-1450
www.uspto.gov

NICHOLAS V. SHERBINA
TOWNSEND AND TOWNSEND AND CREW, LLP
TWO ENBARCADERO CENTER
EIGHTH FLOOR
SAN FRANCISCO, CA 94111-3834

COPY MAILED

MAY 19 2009

OFFICE OF PETITIONS

In re Application of	:	
Chobotov et al.	:	DECISION ON PETITION
Application No. 10/686,863	:	TO WITHDRAW
Filed: October 16, 2003	:	FROM RECORD
Attorney Docket No. TRI-0251-UT4	:	

This is a decision on the Request to Withdraw as attorney or agent of record under 37 C.F.R. § 1.36(b), filed December 1, 2005.

The request is **NOT APPROVED** because it is moot.

A review of the file record indicates that on March 6, 2006 the power of attorney to Townsend and Townsend and Crew, LLP was revoked by the assignee of the patent application. Accordingly, the request to withdraw under 37 C.F.R. § 1.36(b) is moot.

All future communications from the Office will be directed to the below-listed address until otherwise notified by applicant.

Telephone inquires concerning this decision should be directed to the undersigned at 571-272-7751. All other inquires concerning either the examination or status of the application should be directed to the Technology Center.

Joan Olszewski
Petitions Examiner
Office of Petitions

cc: Grant Anderson LLP
Grant Anderson LLP
C/O Portfolioip
P.O. Box 52050
Minneapolis MN 55402

UNITED STATES PATENT AND TRADEMARK OFFICE

Commissioner for Patents
United States Patent and Trademark Office
P.O. Box 1450
Alexandria, VA 22313-1450
www.uspto.gov

HAYNES AND BOONE, LLP
901 MAIN STREET, SUITE 3100
DALLAS, TX 75202

COPY MAILED

SEP 0 8 2004

OFFICE OF PETITIONS

In re Application of :
Chang :
Application No. 10/686,866 : ON PETITION
Filed: October 16, 2003 :
Attorney Docket No. 24061/TSMC2002-1305 :

This decision concerns the June 3, 2004 "Petition and Response to Notice to File Corrected Application Papers - Filing Date Granted." The petition asserts filing with the original application of an allegedly omitted page of specification and is being properly treated as a petition under 37 CFR 1.53(e)(2).

The petition is **GRANTED.**

The application was filed on October 16, 2003. A "Notice to File Corrected Application Papers," mailed on April 29, 2004 ("4/29/04 Notice"), stated that a filing date had been accorded this application, but an abstract and Page 14 of the specification appeared to have been omitted from the filed application. The petition then followed.

The petition contends that the allegedly omitted items were filed with the other application papers on October 16, 2003. In support, the petition is accompanied by a copy of counsel's postcard receipt, indicating receipt in the USPTO for this application on October 16, 2003 of, *inter alia*, "18 pages of specification, 25 claims and 1 page of Abstract of Disclosure."

The Office file for this application contains 14 pages of specification (Pages 1-13, 15; with Pages 12, 13 and 15 containing Claims 1-10, 16-19), but not Pages 14, 16, 17 or 18. The petition encloses copies of an abstract (Page 18) and a Page 14 (containing Claims 11-15), and is supplemented on August 3, 2004 with copies of Pages 16 and 17 (containing Claims 20-25), all purportedly filed previously on October 16, 2003.

Based on the information contained in counsel's postcard receipt, the Office concludes that 18 pages of specification (including 6 pages containing 25 claims, and a page of abstract) had been filed on October 16, 2003, but Pages 14, 16, 17 and 18 were later misplaced. The petition is thus granted.

The 4/29/04 Notice is hereby vacated.

No petition fee is owed. The $130 petition fee has been credited to Deposit Account No. 08-1394 as authorized in the instant petition.

The application is being returned to the Office of Initial Patent Examination for further processing with a filing date of October 16, 2003, using the papers filed on that date and supplemented with the re-submitted pages of specification (Pages 14 and 18 on June 3, 2004; Pages 16 and 17 on August 3, 2004). Thereafter, the file will be forwarded to Technology Center 2800 for examination in due course.

Telephone inquiries should be directed to Petitions Attorney RC Tang at (703) 308-0763.

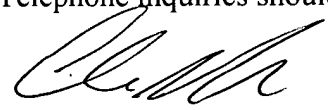

Charles Steven Brantley
Senior Petitions Attorney
Office of Petitions

UNITED STATES PATENT AND TRADEMARK OFFICE

UNITED STATES DEPARTMENT OF COMMERCE
United States Patent and Trademark Office
Address: COMMISSIONER FOR PATENTS
P.O. Box 1450
Alexandria, Virginia 22313-1450
www.uspto.gov

APPL NO.	FILING OR 371 (c) DATE	ART UNIT	FIL FEE REC'D	ATTY.DOCKET NO	DRAWINGS	TOT CLMS	IND CLMS
10/686,870	10/15/2003	1711	900	IN-5698		20	2

CONFIRMATION NO. 7421

CORRECTED FILING RECEIPT

OC000000011913309

26922
BASF CORPORATION
ANNE GERRY SABOURIN
26701 TELEGRAPH ROAD
SOUTHFIELD, MI 48034-2442

Date Mailed: 02/17/2004

Receipt is acknowledged of this regular Patent Application. It will be considered in its order and you will be notified as to the results of the examination. Be sure to provide the U.S. APPLICATION NUMBER, FILING DATE, NAME OF APPLICANT, and TITLE OF INVENTION when inquiring about this application. Fees transmitted by check or draft are subject to collection. Please verify the accuracy of the data presented on this receipt. **If an error is noted on this Filing Receipt, please write to the Office of Initial Patent Examination's Filing Receipt Corrections, facsimile number 703-746-9195. Please provide a copy of this Filing Receipt with the changes noted thereon. If you received a "Notice to File Missing Parts" for this application, please submit any corrections to this Filing Receipt with your reply to the Notice. When the USPTO processes the reply to the Notice, the USPTO will generate another Filing Receipt incorporating the requested corrections (if appropriate).**

Applicant(s)

Thomas J. Laginess, Temperance, MI;
Hans Kempf, Swanton, OH;
Jennifer R. Stewart, Dearborn, MI;

Domestic Priority data as claimed by applicant

This appln claims benefit of 60/477,413 06/10/2003

Foreign Applications

If Required, Foreign Filing License Granted: 01/22/2004

Projected Publication Date: 12/16/2004

Non-Publication Request: No

Early Publication Request: No

Title

Coating composition curable with ultraviolet radiation

Preliminary Class

522

LICENSE FOR FOREIGN FILING UNDER
Title 35, United States Code, Section 184
Title 37, Code of Federal Regulations, 5.11 & 5.15

GRANTED

The applicant has been granted a license under 35 U.S.C. 184, if the phrase "IF REQUIRED, FOREIGN FILING LICENSE GRANTED" followed by a date appears on this form. Such licenses are issued in all applications where the conditions for issuance of a license have been met, regardless of whether or not a license may be required as set forth in 37 CFR 5.15. The scope and limitations of this license are set forth in 37 CFR 5.15(a) unless an earlier license has been issued under 37 CFR 5.15(b). The license is subject to revocation upon written notification. The date indicated is the effective date of the license, unless an earlier license of similar scope has been granted under 37 CFR 5.13 or 5.14.

This license is to be retained by the licensee and may be used at any time on or after the effective date thereof unless it is revoked. This license is automatically transferred to any related applications(s) filed under 37 CFR 1.53(d). This license is not retroactive.

The grant of a license does not in any way lessen the responsibility of a licensee for the security of the subject matter as imposed by any Government contract or the provisions of existing laws relating to espionage and the national security or the export of technical data. Licensees should apprise themselves of current regulations especially with respect to certain countries, of other agencies, particularly the Office of Defense Trade Controls, Department of State (with respect to Arms, Munitions and Implements of War (22 CFR 121-128)); the Office of Export Administration, Department of Commerce (15 CFR 370.10 (j)); the Office of Foreign Assets Control, Department of Treasury (31 CFR Parts 500+) and the Department of Energy.

NOT GRANTED

No license under 35 U.S.C. 184 has been granted at this time, if the phrase "IF REQUIRED, FOREIGN FILING LICENSE GRANTED" DOES NOT appear on this form. Applicant may still petition for a license under 37 CFR 5.12, if a license is desired before the expiration of 6 months from the filing date of the application. If 6 months has lapsed from the filing date of this application and the licensee has not received any indication of a secrecy order under 35 U.S.C. 181, the licensee may foreign file the application pursuant to 37 CFR 5.15(b).

UNITED STATES PATENT AND TRADEMARK OFFICE

COMMISSIONER FOR PATENTS
UNITED STATES PATENT AND TRADEMARK OFFICE
P.O. BOX 1450
ALEXANDRIA, VA 22313-1450
WWW.USPTO.GOV

Paper No. None

ROSS J. OEHLER
SANOFI-AVENTIS U.S. LLC
1041 ROUTE 202-206
MAIL CODE: D303A
BRIDGEWATER NJ 08807

COPY MAILED
DEC 14 2006
OFFICE OF PETITIONS

In re Application of	:	
Mark Czekaj, Scott I. Klein,	:	
and Heinz W. Pauls	:	
Application No. 10/686,871	:	DECISION ON TWO PETITIONS
Filing Date: October 16, 2003	:	UNDER 37 C.F.R. §§ 1.47(A)
Attorney Docket Number:	:	AND 1.183
DEAV1999S005USCIP	:	
Title: N-ACYLPYRROLIDIN-2-	:	
YLALKYLBENZAMIDINE DERIVATIVES	:	
AS INHIBITORS OF FACTOR XA	:	

Background

This is a decision on the two petitions concurrently filed on September 5, 2006 pursuant to 37 C.F.R. §§ 1.47(a) and 1.183, requesting the acceptance of a declaration without the signature of one of the joint inventors, and the waiver of the requirement for a new declaration under 37 C.F.R. §1.67(a).

The present application was filed on October 16, 2003, and is a continuation-in-part of Application number 10/143,190. The declaration which was provided on filing was associated with this parent application, and was executed by each of the three joint inventors.

On January 25, 2005, Petitioner submitted a declaration which is associated with the present application and does not list Mr. Klein as an inventor. Petitioner further submitted an explanation that Messrs. Czekaj, Klein, and Pauls invented the subject matter disclosed in the parent application, however Mr.

Klein subsequently left the employ of the assignee and was not involved in the development of the subject matter which comprises the new matter that is disclosed in the present continuation-in-part child application.

On January 31, 2006, a non-final action was mailed, which indicated that a supplemental declaration pursuant to 37 C.F.R. §1.67 would be required, and that the supplemental declaration should be associated with the present application as well as executed by each of the three joint inventors.

The petition under 37 C.F.R.§1.183

The petition fee has been charged to Petitioner's Deposit Account, as authorized in the petition.

In short, Petitioner wishes to have the Office waive the requirement that Mr. Klein sign the supplemental declaration which is associated with the present application.

A discussion follows.

Applicable Rules

37 C.F.R. §1.47(a) sets forth, *in toto*:

(a) If a joint inventor refuses to join in an application for patent or cannot be found or reached after diligent effort, the application may be made by the other inventor on behalf of himself or herself and the nonsigning inventor. The oath or declaration in such an application must be accompanied by a petition including proof of the pertinent facts, the fee set forth in § 1.17(g), and the last known address of the nonsigning inventor. The nonsigning inventor may subsequently join in the application by filing an oath or declaration complying with § 1.63.

37 C.F.R. §1.63(a)(1) and (2) set forth, *in toto*:

(a) An oath or declaration filed under § 1.51(b)(2) as a part of a nonprovisional application must:
(1) Be executed, i.e., signed, in accordance with either § 1.66 or § 1.68. There is no minimum age for a person to be qualified to sign, but the person must be competent to sign, i.e., understand the document that the person is signing;
(2) Identify each inventor by full name, including the family name, and at least one given name without abbreviation together with any other given name or initial;

37 C.F.R. §1.67(a) sets foth, *in toto*:

(a) The Office may require, or inventors and applicants may submit, a supplemental oath or declaration meeting the requirements of § 1.63 or § 1.162 to correct any deficiencies or inaccuracies present in the earlier filed oath or declaration.
(1) Deficiencies or inaccuracies relating to all the inventors or applicants (§§ 1.42, 1.43, or § 1.47) may be corrected with a supplemental oath or declaration signed by all the inventors or applicants.
(2) Deficiencies or inaccuracies relating to fewer than all of the inventor(s) or applicant(s) (§§ 1.42, 1.43 or § 1.47) may be corrected with a supplemental oath or declaration identifying the entire inventive entity but signed only by the inventor(s) or applicant(s) to whom the error or deficiency relates.
(3) Deficiencies or inaccuracies due to the failure to meet the requirements of § 1.63(c) (e.g., to correct the omission of a mailing address of an inventor) in an oath or declaration may be corrected with an application data sheet in accordance with § 1.76.
(4) Submission of a supplemental oath or declaration or an application data sheet (§ 1.76), as opposed to who must sign the supplemental oath or declaration or an application data sheet, is governed by § 1.33(a)(2) and paragraph (b) of this section.

37 C.F.R. §1.183 sets forth, *in toto*:

In an extraordinary situation, when justice requires, any requirement of the regulations in this part which is not a requirement of the statutes may be suspended or waived by the Director or the Director's designee, sua sponte, or on petition of the interested party, subject to such other requirements as may be imposed. Any petition under this section must be accompanied by the petition fee set forth in § 1.17(h).

[47 FR 41278, Sept. 17, 1982, effective Oct. 1, 1982; revised, 68 FR 14332, Mar. 25, 2003, effective May 1, 2003]

Analysis

In order to submit a grantable petition under 37 C.F.R. §1.183, Petitioner must show (1) that this is an extraordinary situation where (2) justice requires waiver of the rule. In re Sivertz, 227 U.S.P.Q. 255, 256 (Comm'r Pat. 1985).

Petitioner has not neither asserted nor established that either condition exists in this case. The circumstances of this case do not demonstrate an extraordinary situation, much less one where justice requires waiver of the rules.

The existence of an extraordinary situation

The PTO has a well established and well publicized practice by

which practitioners may seek the acceptance of a declaration which has been executed by less than all of the joint inventors listed thereon. Petitioner must submit the filing fee, the fee associated with the late submission of the petition (if not presented with the application on filing), a statement of the last known address of the non-signing inventor; proof that either a copy of the entire application (specification, claims, drawings, and the oath or declaration) was sent or given to the non-signing inventor for review and proof that the non-signing inventor refuses to join in the application, or the non-signing inventor cannot be found or reached after diligent effort, and a statement that these efforts were not successful, and; a declaration which complies with 37 C.F.R. §1.63.

It is not clear what is extraordinary about a situation where a joint inventor has left the employ of the assignee, and has refused to execute a supplemental declaration.

The question of whether justice requires the waiver of the rule:

Pursuant to Rule §1.47(a), the application may be made by the other signing inventors on behalf themselves and the non-signing inventor.

As such, an avenue exists by which Petitioner may escape this quandary, and it follows that justice does not require that Rule §1.67(a) be waived. Furthermore, it is noted that with the present petition, Petitioner has included a petition under 37 C.F.R. §1.47(a).

Conclusion

The petition under 37 C.F.R. §1.183 is **DISMISSED.**

The petition under 37 C.F.R.§1.47(a):

With the petition pursuant to Rule §1.47(a)[1], Petitioner has asserted that the non-signing inventor orally refused to sign the supplemental declaration.

---

1 A grantable petition under 37 C.F.R. §1.47(a) requires:
(1) the petition fee of $200;
(2) a surcharge of either $65 or $130, if the petition is not filed at the time of filing the application, as set forth in 37 CFR § 1.16(f);
(3) a statement of the last known address of the non-signing inventors;

Both the petition fee and the surcharge associated with the late submission of the present petition have been charged to Petitioner's Deposit Account, as authorized in the petition.

With the present petition, Petitioner has submitted a declaration which complies with 37 C.F.R. §1.63.

As such, requirements (1), (2), and (5) of Rule §1.47(a) have been met.

Regarding the third requirement, petitioner has failed to include a statement of the last known address of the non-signing inventor[2].

Regarding the fourth requirement, it does not appear that a complete copy of the present application was sent to the non-signing inventor. It follows that one cannot refuse to sign something which one has not been presented with. A refusal by an inventor to sign a declaration when the inventor has not been presented with the application papers does not itself suggest that the inventor is refusing to join the application unless it is clear that the inventor understands exactly what he or she is being asked to sign and refuses to accept the application papers. It is reasonable to require that the inventor be presented with the application papers associated with the present application before a petition under Rule §1.47(a) is granted, since such a procedure ensures that the inventor is apprised of the application to which the oath or declaration is directed[3].

Conclusion

The petition under 37 C.F.R. §1.47(a) is **DISMISSED**.

Any reply must be submitted within **TWO MONTHS** from the mail date of this decision. Extensions of time under 37 C.F.R. §1.136(a)

---

(4) proof that either:
  a) a copy of the entire application (specification, claims, drawings, and the oath or declaration) was sent or given to the non-signing inventor for review and proof that the non-signing inventor refuses to join in the application, or
  b) the non-signing inventor cannot be found or reached after diligent effort, and a statement that these efforts were not successful;

(5) a declaration which complies with 37 CFR §1.63.

2 See MPEP 409.03(e).
3 In re Gray, 115 USPQ 80 (Comm'r Pat. 1956).

are permitted. The reply should include a cover letter entitled "Renewed Petition Under 37 C.F.R. §§1.47(a) and/or 1.183." This is not a final agency action within the meaning of 5 U.S.C 704.

The renewed petition(s) should indicate in a prominent manner that the attorney handling this matter is Paul Shanoski, and may be submitted by mail[4], hand-delivery[5], or facsimile[6].

If responding by mail, Petitioner is advised not to place the undersigned's name on the envelope. Only the information that appears in the footnote should be included - adding anything else to the address will delay the delivery of the response to the undersigned.

Telephone inquiries regarding *this decision* should be directed to the undersigned at (571) 272-3225[7]. All other inquiries concerning examination procedures or status of the application should be directed to the Technology Center.

Paul Shanoski
Senior Attorney
Office of Petitions
United States Patent and Trademark Office

4 Mail Stop Petition, Commissioner for Patents, United States Patent and Trademark Office, P.O. Box 1450, Alexandria, VA, 22313-1450.
5 Customer Window, Randolph Building, 401 Dulaney Street, Alexandria, VA, 22314.
6 (571) 273-8300- please note this is a central facsimile number.
7 Petitioner will note that all practice before the Office should be in writing, and the action of the Office will be based exclusively on the written record in the Office. See 37 C.F.R. §1.2. As such, Petitioner is reminded that no telephone discussion may be controlling or considered authority for Petitioner's further action(s).

RECEIVED
CENTRAL FAX CENTER
APR 13 2007

IN THE UNITED STATES PATENT AND TRADEMARK OFFICE

In re Application of
CZEKAJ, et al.

Application No.: **10/686,871**

Filed: **October 16, 2003**

Title: **N-ACYLPYRROLIDIN-2-YLALYKLBENZAMIDINE DERIVATIVES**

Examiner: T. McKenzie

Art Unit: 1624

TELEFAX CERTIFICATE

I hereby certify that this correspondence is being transmitted via facsimile to the Commissioner for Patents, Alexandria, VA 22313, on 571 273 8300

April 13, 2007
Date of Transmission

Signature

Mr. PAUL SHANOSKI
Mail Stop Petition
Commissioner for Patents
United States Patent and Trademark Office
P. O. Box 1450
Alexandria, VA 22313-1450

RESPONSE TO DECISION ON PETITIONS

Dear Sir:

This paper is in response to the decision mailed December 14, 2006 (hereinafter the Decision), on two petitions concurrently filed on September 5, 2006, pursuant to 37 C.F.R. § 1.47(A) and 1.183, requesting the acceptance of a declaration without the signature of one of the joint inventors, and the waiver of the requirement for a new declaration under 37 C.F.R. § 1.67(a), in connection with the above-identified patent application.

The petitions were rejected as a complete copy of the present application was not sent to the non-signing inventor. (See the Decision, page 5). The undersigned attorney thereafter sent a complete copy of the present application and a copy of an unexecuted Declaration to the non-signing inventor, Mr. Scott Klein, on March 5, 2007. Surprisingly, Mr. Klein timely returned the executed Declaration to the undersigned attorney. Thus, pursuant to the telephone conversation that the undersigned attorney had with Mr. Paul Shanoski, the attorney at Office of Petitions responsible handling this matter, on April 5, 2007, Applicants submit concurrently herewith the

executed Declaration by Mr. Klein, and respectfully request withdrawal of the aforesaid petitions.

Applicants also file concurrently herewith a Petition for Extension of Time for two months, or until April 16, 2007. The Commissioner is hereby authorized to charge any fees or credit any overpayment to Deposit Account No. 18-1982 in the name of Aventis Pharmaceuticals, Inc.

Respectfully submitted,

Dated: April 13, 2007

Jiang Lin, Registration No. 51,065
Attorney for Applicants

Sanofi-aventis U.S. LLC
Patent Department
Route #202-206 / P.O. Box 6800
Bridgewater, New Jersey 08807-0800
Telephone: 908-231-3582
Telefax: 908-231-2626

Docket No. DEAV1999/S005 US CIP1

PAGE 4/14 * RCVD AT 4/13/2007 11:18:53 AM [Eastern Daylight Time] * SVR:USPTO-EFXRF-1/10 * DNIS:2738300 * CSID:908 231 2626 * DURATION (mm-ss):04-00

DEAV1999/S005 US CIP

ASSIGNMENT AND AGREEMENT

For value received and intending to be legally bound, I/we, the undersigned joint inventor(s) (Assignor(s)), sell, assign and transfer to **Aventis Pharmaceuticals Inc.** (Assignee), 300 Somerset Corporate Boulevard, Bridgewater, New Jersey 08807-2854, United States of America, and its successors, assigns and legal representatives, the entire right, title and interest in and to my/our invention and any improvements thereon for all countries of the world, relating in and to the application for United States Letters Patent therefor, assigned Attorney Docket No. **DEAV1999/S005 US CNT** and (if filed prior to the execution hereof) filed on **October 16, 2003**, as Serial No. **10/686,871**, entitled

N-ACYLPYRROLIDIN-2-YLALKYLBENZAMIDINE DERIVATIVES AS INHIBITORS OF FACTOR XA

and all the rights and privileges, including any and all benefits under the International Convention for the Protection of Industrial Property, including the right to claim priority based on said United States application, and under any and all Letters Patent which may be granted therefor, and all right, title and interest in and to every patent application filed or to be filed on said invention in any other country or patent organization, including continuations, divisions, renewals, revivals, and any substitute applications of said United States application, and any and all patents which may issue thereon, and any reissues, pipelines and extensions, and governmental exclusivity rights of the same.

I/we authorize and request competent authorities to grant and issue any and all patents on said invention to said assignee or its successor, assigns and legal representatives, or to such nominees as said assignee may designate.

I/we agree that, when requested, I/we will, without charge to said assignee but at its expense, sign all papers, take all rightful oaths, and do all acts which may be necessary, desirable or convenient for securing and maintaining patents for said invention in any and all countries and for vesting title thereto in said assignee, its successors, assigns, legal representatives or nominees.

I/we covenant with said assignee, its successors, assigns and legal representatives, that the rights and property herein conveyed are free and clear of any encumbrance, and that I/we have full right to convey the same as herein expressed.

Signed at _____ on this _____ day of _____, 2007.
(City, State and Nation)

Signature: _____
Inventor's Name: Mark Czekaj
Residential Address: 3897 Charter Club Drive
Doylestown, PA 18901

Signed at Collegeville, PA USA on this 12TH day of MARCH, 2007.
(City, State and Nation)

Signature: _____
Inventor's Name: Scott I. Klein
Residential Address: 560 Locust St.
Collegeville, PA 19426

Signed at _____ on this _____ day of _____, 2007.
(City, State and Nation)

Signature: _____
Inventor's Name: Henry W. Pauls
Residential Address: 28 New York Avenue
Flemington, NJ 08822

UNITED STATES OF AMERICA

DECLARATION FOR PATENT APPLICATION

As a below named inventor(s), I/We hereby declare that:

My/Our residence(s), post office address(es) and citizenship(s) are as stated below my name(s).
I/We verily believe I am/we are the original, first and sole/joint inventor(s) of the subject matter which is claimed and for which a patent is sought on the invention entitled:

N-ACYLPYRROLIDIN-2-YLALKYLBENZAMIDINE DERIVATIVES

and the specification of which (check one)
- ☐ is attached hereto (Aventis Docket No.DEAV1999/S005 US CIP)
- ☒ was filed on **October 16, 2003** as U.S. Application Number **10/686,871** and was amended on (if applicable).
- ☐ was described and claimed in PCT Int'l Application Number filed on and as amended under PCT Article 19 on (if any).

I/We hereby state that I/We have reviewed and understand the contents of the above identified specification, including the claims as amended by any amendment referred to above.
I/We acknowledge the duty to disclose to the U.S. Patent and Trademark Office all information known to me/us to be material to patentability as defined in 37 C.F.R. 1.56.

☒ I/We hereby claim foreign priority benefits under Title 35, United States Code §119(a)-(d) or 365 (b) of any foreign application(s) for patent or inventor's certificate, or 365(a) of any PCT international application which designated at least one other country other than the United States of America, listed below and having a filing date before that of the application on which priority is claimed. I/We have also identified below any foreign application for patent or inventor's certificate having a filing date before that of the application on which priority is claimed:

	Number	Country	Day/Month/Year Filed
Foreign Priority:	9930540.1	Great Britain	23/December/1999
Prior Foreign Appln(s):			

☒ I/We hereby claim the benefit under Title 35, United States Code §119(e) of any United States Provisional application(s) listed below:

Number	Filing Date
60/164,621	November 10, 1999

☐ I/We hereby claim the benefit under Title 35, United States Code §120 or 365(c) of any United States application(s) or international application designating the United States listed below and, insofar as the subject matter of each of the claims of this application is not disclosed in the prior United States application in the manner provided by the first paragraph of Title 35, United States Code §112, I/We acknowledge the duty to disclose information which is material to patentability as defined in Title 37, Code of Federal Regulations §1.56 which became available between the filing date of the prior application and the national or PCT international filing date of this application.

Application Serial No.	Filing Date	Status (Patented, Pending)

I/We hereby declare that all statements made herein of my own knowledge are true and that all statements made on information and belief are believed to be true; and further that these statements were made with the knowledge that willful false statements and the like so made are punishable by fine or imprisonment, or both, under Title 18, United States code §1001, and that such willful false statements may jeopardize the validity of the application or any patent issued thereon.

Inventors(s): ☒ Additional names and signatures are attached.

1. Full name: Mark CZEKAJ

Signature:
Date:
Country of Citizenship: US
Residence: Doylestown, PA
(City and State/City and Country only)
P. O. Address: 3897 Charter Club Drive
Doylestown, PA 18901

2. Full name: Scott I. KLEIN

Signature:
Date: 3/12/07
Country of Citizenship: US
Residence: Collegeville, PA
(City and State/City and Country only)
P. O. Address: 560 Locust St
Collegeville, PA 19426

3. Full name: Heinz W. PAULS

Signature: _____

Date: _____

Country of Citizenship: CANADA

Residence: Ontario, CANADA
(City and State/City and Country only)

P. O. Address: 460 Fourth Line
Oakville, Ontario CANADA L6L 5A4

Aventis Pharmaceuticals Inc.
Patent Department
Route #202-206
P.O. Box 6800
Mail Code D-303A
Bridgewater, NJ 08807-0800
Telephone (908) 231-3582
Telefax (908) 231-2626

Aventis Docket No. DEAV1999/S005 US CIP

RECEIVED IFW
DEC 18 2006
PATENT DEPT.

File Petitions(Renewed) - 2/14/07

ACTION DUE

Deadline To File Renewed Petitions W/5th EOT - 7/14/07

DUE DATE 2/14/07 - 7/14/07
DKTD BY Jes 12/19/06
ATTY J. LIN

UNITED STATES PATENT AND TRADEMARK OFFICE
COMMISSIONER FOR PATENTS
UNITED STATES PATENT AND TRADEMARK OFFICE
P.O. BOX 1450
ALEXANDRIA, VA 22313-1450
www.uspto.gov

Paper No. None

ROSS J. OEHLER
SANOFI-AVENTIS U.S. LLC
1041 ROUTE 202-206
MAIL CODE: D303A
BRIDGEWATER NJ 08807

COPY MAILED
DEC 14 2006
OFFICE OF PETITIONS

In re Application of :
Mark Czekaj, Scott I. Klein, :
and Heinz W. Pauls :
Application No. 10/686,871 : DECISION ON TWO PETITIONS
Filing Date: October 16, 2003 : UNDER 37 C.F.R. §§ 1.47(A)
Attorney Docket Number: : AND 1.183
DEAV1999S005USCIP :
Title: N-ACYLPYRROLIDIN-2- :
YLALKYLBENZAMIDINE DERIVATIVES :
AS INHIBITORS OF FACTOR XA :

Background

This is a decision on the two petitions concurrently filed on September 5, 2006 pursuant to 37 C.F.R. §§ 1.47(a) and 1.183, requesting the acceptance of a declaration without the signature of one of the joint inventors, and the waiver of the requirement for a new declaration under 37 C.F.R. §1.67(a).

The present application was filed on October 16, 2003, and is a continuation-in-part of Application number 10/143,190. The declaration which was provided on filing was associated with this parent application, and was executed by each of the three joint inventors.

On January 25, 2005, Petitioner submitted a declaration which is associated with the present application and does not list Mr. Klein as an inventor. Petitioner further submitted an explanation that Messrs. Czekaj, Klein, and Pauls invented the subject matter disclosed in the parent application, however Mr.

Klein subsequently left the employ of the assignee and was not involved in the development of the subject matter which comprises the new matter that is disclosed in the present continuation-in-part child application.

On January 31, 2006, a non-final action was mailed, which indicated that a supplemental declaration pursuant to 37 C.F.R. §1.67 would be required, and that the supplemental declaration should be associated with the present application as well as executed by each of the three joint inventors.

The petition under 37 C.F.R.§1.183

The petition fee has been charged to Petitioner's Deposit Account, as authorized in the petition.

In short, Petitioner wishes to have the Office waive the requirement that Mr. Klein sign the supplemental declaration which is associated with the present application.

A discussion follows.

Applicable Rules

37 C.F.R. §1.47(a) sets forth, *in toto*:

(a) If a joint inventor refuses to join in an application for patent or cannot be found or reached after diligent effort, the application may be made by the other inventor on behalf of himself or herself and the nonsigning inventor. The oath or declaration in such an application must be accompanied by a petition including proof of the pertinent facts, the fee set forth in § 1.17(g), and the last known address of the nonsigning inventor. The nonsigning inventor may subsequently join in the application by filing an oath or declaration complying with § 1.63.

37 C.F.R. §1.63(a)(1) and (2) set forth, *in toto*:

(a) An oath or declaration filed under § 1.51(b)(2) as a part of a nonprovisional application must:
(1) Be executed, i.e., signed, in accordance with either § 1.66 or § 1.68. There is no minimum age for a person to be qualified to sign, but the person must be competent to sign, i.e., understand the document that the person is signing;
(2) Identify each inventor by full name, including the family name, and at least one given name without abbreviation together with any other given name or initial;

37 C.F.R. §1.67(a) sets foth, *in toto*:

(a) The Office may require, or inventors and applicants may submit, a supplemental oath or declaration meeting the requirements of § 1.63 or § 1.162 to correct any deficiencies or inaccuracies present in the earlier filed oath or declaration.
(1) Deficiencies or inaccuracies relating to all the inventors or applicants (§§ 1.42, 1.43, or § 1.47) may be corrected with a supplemental oath or declaration signed by all the inventors or applicants.
(2) Deficiencies or inaccuracies relating to fewer than all of the inventor(s) or applicant(s) (§§ 1.42, 1.43 or § 1.47) may be corrected with a supplemental oath or declaration identifying the entire inventive entity but signed only by the inventor(s) or applicant(s) to whom the error or deficiency relates.
(3) Deficiencies or inaccuracies due to the failure to meet the requirements of § 1.63(c) (e.g., to correct the omission of a mailing address of an inventor) in an oath or declaration may be corrected with an application data sheet in accordance with § 1.76.
(4) Submission of a supplemental oath or declaration or an application data sheet (§ 1.76), as opposed to who must sign the supplemental oath or declaration or an application data sheet, is governed by § 1.33(a)(2) and paragraph (b) of this section.

37 C.F.R. §1.183 sets forth, *in toto*:

In an extraordinary situation, when justice requires, any requirement of the regulations in this part which is not a requirement of the statutes may be suspended or waived by the Director or the Director's designee, sua sponte, or on petition of the interested party, subject to such other requirements as may be imposed. Any petition under this section must be accompanied by the petition fee set forth in § 1.17(h).

[47 FR 41278, Sept. 17, 1982, effective Oct. 1, 1982; revised, 68 FR 14332, Mar. 25, 2003, effective May 1, 2003]

Analysis

In order to submit a grantable petition under 37 C.F.R. §1.183, Petitioner must show (1) that this is an extraordinary situation where (2) justice requires waiver of the rule. In re Sivertz, 227 U.S.P.Q. 255, 256 (Comm'r Pat. 1985).

Petitioner has not neither asserted nor established that either condition exists in this case. The circumstances of this case do not demonstrate an extraordinary situation, much less one where justice requires waiver of the rules.

The existence of an extraordinary situation

The PTO has a well established and well publicized practice by

which practitioners may seek the acceptance of a declaration which has been executed by less than all of the joint inventors listed thereon. Petitioner must submit the filing fee, the fee associated with the late submission of the petition (if not presented with the application on filing), a statement of the last known address of the non-signing inventor; proof that either a copy of the entire application (specification, claims, drawings, and the oath or declaration) was sent or given to the non-signing inventor for review and proof that the non-signing inventor refuses to join in the application, or the non-signing inventor cannot be found or reached after diligent effort, and a statement that these efforts were not successful, and; a declaration which complies with 37 C.F.R. §1.63.

It is not clear what is extraordinary about a situation where a joint inventor has left the employ of the assignee, and has refused to execute a supplemental declaration.

The question of whether justice requires the waiver of the rule:

Pursuant to Rule §1.47(a), the application may be made by the other signing inventors on behalf themselves and the non-signing inventor.

As such, an avenue exists by which Petitioner may escape this quandary, and it follows that justice does not require that Rule §1.67(a) be waived. Furthermore, it is noted that with the present petition, Petitioner has included a petition under 37 C.F.R. §1.47(a).

Conclusion

The petition under 37 C.F.R. §1.183 is **DISMISSED.**

The petition under 37 C.F.R.§1.47(a):

With the petition pursuant to Rule §1.47(a)[1], Petitioner has asserted that the non-signing inventor orally refused to sign the supplemental declaration.

---

1 A grantable petition under 37 C.F.R. §1.47(a) requires:
(1) the petition fee of $200;
(2) a surcharge of either $65 or $130, if the petition is not filed at the time of filing the application, as set forth in 37 CFR § 1.16(f);
(3) a statement of the last known address of the non-signing inventors;

Both the petition fee and the surcharge associated with the late submission of the present petition have been charged to Petitioner's Deposit Account, as authorized in the petition.

With the present petition, Petitioner has submitted a declaration which complies with 37 C.F.R. §1.63.

As such, requirements (1), (2), and (5) of Rule §1.47(a) have been met.

Regarding the third requirement, petitioner has failed to include a statement of the last known address of the non-signing inventor[2].

Regarding the fourth requirement, it does not appear that a complete copy of the present application was sent to the non-signing inventor. It follows that one cannot refuse to sign something which one has not been presented with. A refusal by an inventor to sign a declaration when the inventor has not been presented with the application papers does not itself suggest that the inventor is refusing to join the application unless it is clear that the inventor understands exactly what he or she is being asked to sign and refuses to accept the application papers. It is reasonable to require that the inventor be presented with the application papers associated with the present application before a petition under Rule §1.47(a) is granted, since such a procedure ensures that the inventor is apprised of the application to which the oath or declaration is directed[3].

Conclusion

The petition under 37 C.F.R. §1.47(a) is **DISMISSED.**

Any reply must be submitted within **TWO MONTHS** from the mail date of this decision. Extensions of time under 37 C.F.R. §1.136(a)

---

(4) proof that either:
  a) a copy of the entire application (specification, claims, drawings, and the oath or declaration) was sent or given to the non-signing inventor for review and proof that the non-signing inventor refuses to join in the application, or
  b) the non-signing inventor cannot be found or reached after diligent effort, and a statement that these efforts were not successful;
(5) a declaration which complies with 37 CFR §1.63.

2 See MPEP 409.03(e).
3 In re Gray, 115 USPQ 80 (Comm'r Pat. 1956).

are permitted. The reply should include a cover letter entitled "Renewed Petition Under 37 C.F.R. §§1.47(a) and/or 1.183." This is not a final agency action within the meaning of 5 U.S.C 704.

The renewed petition(s) should indicate in a prominent manner that the attorney handling this matter is Paul Shanoski, and may be submitted by mail[4], hand-delivery[5], or facsimile[6].

If responding by mail, Petitioner is advised not to place the undersigned's name on the envelope. Only the information that appears in the footnote should be included - adding anything else to the address will delay the delivery of the response to the undersigned.

Telephone inquiries regarding *this decision* should be directed to the undersigned at (571) 272-3225[7]. All other inquiries concerning examination procedures or status of the application should be directed to the Technology Center.

Paul Shanoski
Senior Attorney
Office of Petitions
United States Patent and Trademark Office

4 Mail Stop Petition, Commissioner for Patents, United States Patent and Trademark Office, P.O. Box 1450, Alexandria, VA, 22313-1450.
5 Customer Window, Randolph Building, 401 Dulaney Street, Alexandria, VA, 22314.
6 (571) 273-8300- please note this is a central facsimile number.
7 Petitioner will note that all practice before the Office should be in writing, and the action of the Office will be based exclusively on the written record in the Office. See 37 C.F.R. §1.2. As such, Petitioner is reminded that no telephone discussion may be controlling or considered authority for Petitioner's further action(s).

UNITED STATES PATENT AND TRADEMARK OFFICE

Commissioner for Patents
United States Patent and Trademark Office
P.O. Box 1450
Alexandria, VA 22313-1450
www.uspto.gov

ALLEN J. MOSS
SQUIRE, SANDERS & DEMPSEY L.L.P.
TWO RENAISSANCE SQUARE
40 NORTH CENTRAL AVENUE
SUITE 2700
PHOENIX, AZ 85004-4498

MAILED

MAY 19 2009

OFFICE OF PETITIONS

In re Application of	:	
Goldsmith et al.	:	DECISION ON PETITION
Application No. 10/686,873	:	TO WITHDRAW
Filed: October 16, 2003	:	FROM RECORD
Attorney Docket No. 58248-2	:	

This is a decision on the Request to Withdraw as attorney or agent of record under 37 C.F.R. § 1.36(b), filed November 7, 2005 and additionally on January 9, 2006.

The request is **NOT APPROVED** because it is moot.

A review of the file record indicates that on March 1, 2006 the power of attorney to Squire, Sanders & Dempsey L.L.P. was revoked by the applicant of the patent application. Accordingly, the request to withdraw under 37 C.F.R. § 1.36(b) is moot.

All future communications from the Office will be directed to the below-listed address until otherwise notified by applicant.

Telephone inquires concerning this decision should be directed to the undersigned at 571-272- 7751. All other inquires concerning either the examination or status of the application should be directed to the Technology Center.

Joan Olszewski
Petitions Examiner
Office of Petitions

cc: Seyfarth Shaw LLP
World Trade Center East
Two Seaport Lane, Suite 300
Boston MA 02210-2028

UNITED STATES PATENT AND TRADEMARK OFFICE

Commissioner for Patents
United States Patent and Trademark Office
P.O. Box 1450
Alexandria, VA 22313-1450
www.uspto.gov

REENA KUYPER, ESQ.
BYARD NILSSON, ESQ.
9255 SUNSET BOULEVARD
SUITE 810
LOS ANGELES CA 90069

COPY MAILED

JAN 15 2008

OFFICE OF PETITIONS

In re Application of :
Ronald A. Katz :
Application No. 10/686,883 : ON PETITION
Filed: October 16, 2003 :
Attorney Docket No. 6046-101C5 :

This is a decision on the petition under MPEP 711.03 and 37 CFR 1.137, filed October 22, 2007, which is being treated as a petition under 37 CFR 1.181 requesting withdrawal of the holding of abandonment.

The petition is **GRANTED**.

Petitioner requests the Notice of Abandonment mailed August 23, 2007 be withdrawn as petitioner timely filed a response. The file record shows petitioner timely filed a response to the non-final Office action mailed January 25, 2007. The response was filed on August 13, 2007 with a certificate of mailing of July 25, 2007. The response included a three month extension of time. Petitioner's response was timely filed on the last day of the extended six month response time.

Telephone inquiries concerning this decision should be directed to Carl Friedman at (571) 272-6842.

The application file is being referred to Technology Center Art Unit 2614 for appropriate action on the amendment filed August 13, 2007.

David Bucci
Petitions Examiner
Office of Petitions

UNITED STATES PATENT AND TRADEMARK OFFICE

Commissioner for Patents
United States Patent and Trademark Office
P.O. Box 1450
Alexandria, VA 22313-1450
www.uspto.gov

REENA KUYPER, ESQ.
BYARD NILSSON, ESQ.
9229 SUNSET BOULEVARD
SUITE 630
LOS ANGELES CA 90069

MAIL

APR 23 2010

DIRECTOR'S OFFICE
TECHNOLOGY CENTER 2600

In re Application of:
KATZ, RONALD A.
Application Serial No.: 10/686,883
Filed: October 16, 2003
For: **COMMERCIAL PRODUCT TELEPHONIC ROUTING SYSTEM WITH MOBILE WIRELESS AND VIDEO VENDING CAPABILITY**

DECISION
ON PETITION

This is a decision on the petition to make special, filed on April 3, 2010 under MPEP § 707.02.

Petitioner requests that the application be considered special.

MPEP § 708.01 [R-2] List of Special Cases, states in part:
(I) Applications pending more than 5 years, including those which, by relation to a prior United States application, have an effective pendency of more than 5 years. See MPEP § 707.02. [emphasis added]

In accordance with MPEP §§ 707.02 and 708.01(I), applications pending over 5 years, including those which by relation to a prior United States application, should be considered special. This application by virtue of its prolonged pendency is considered special in accordance with PTO policy. A petition to effect such status is not necessary. Any request for interview should be initiated via the Examiner.

Accordingly, the petition is **DISMISSED AS MOOT.**

Kenneth A. Wieder
Special Program Examiner
Technology Center 2600
Communications

UNITED STATES PATENT AND TRADEMARK OFFICE

UNITED STATES DEPARTMENT OF COMMERCE
United States Patent and Trademark Office
Address: COMMISSIONER FOR PATENTS
P.O. Box 1450
Alexandria, Virginia 22313-1450
www.uspto.gov

TOWNSEND AND TOWNSEND AND CREW LLP/ORACLE
TWO EMBARCADERO CENTER
8TH FLOOR
SAN FRANCISCO, CA 94111-3834

Mail Date: 04/21/2010

Applicant	: Luke Kowalski	: DECISION ON REQUEST FOR
Patent Number	: 7596757	: RECALCULATION of PATENT
Issue Date	: 09/29/2009	: TERM ADJUSTMENT IN VIEW
Appliction No	: 10/686,889	: OF WYETH AND NOTICE OF INTENT TO
Filed	: 10/15/2003	: ISSUE CERTIFICATE OF CORRECTION
		:

The Request for Recalculation is **GRANTED** to the extent indicated.

The patent term adjustment has been determined to be **1179** days. The USPTO will *sua sponte* issue a certificate of correction reflecting the amount of PTA days determined by the recalculation.

Prior to the issuance of the certificate of correction, the USPTO will afford patentee an opportunity to be heard and request reconsideration. Accordingly, patentee has **one month or thirty (30) days**, whichever is longer, to file a request for reconsideration of this patent term adjustment calculation. See 35 U.S.C. 154(b)(3)(B)(ii) and 37 CFR 1.322(a)(4). No extensions of time will be granted under 37 CFR 1.136.

Patentee should use document code PET.OP if electronically filing a request for reconsideration of this patent term adjustment calculation. The patentee must also include the information required by 37 CFR 1.705(b)(2) and the fee required by 37 CFR 1.18(e). If patentee does not file a timely request for reconsideration of this patent term adjustment calculation including the information required by 37 CFR 1.705(b)(2) and the fee required by 37 CFR 1.18(e), the USPTO will issue a certificate of correction reflecting the PTA determination noted above.

Patentee should be aware that in order to preserve the right to review in the United States District Court for the District of Columbia of the USPTO patent term adjustment determination, patentee must ensure that he or she also take the steps required under 35 U.S.C. 154(b)(4)(A) in a timely manner. Nothing in the request for recalculation should be construed as providing an alternative time frame for commencing a civil action under 35 U.S.C. 154(b)(4)(A).

Any questions concerning this decision should be directed to the Office of Patent Legal Administration at 571-272-7702.

UNITED STATES PATENT AND TRADEMARK OFFICE

Commissioner for Patents
United States Patent and Trademark Office
P.O. Box 1450
Alexandria, VA 22313-1450
www.uspto.gov

DLA PIPER RUDNICK GRAY CARY US, LLP
2000 UNIVERSITY AVENUE
E. PALO ALTO, CA 94303-2248

COPY MAILED

MAY 23 2005

OFFICE OF PETITIONS

In re Application of :
Rygaard, Christopher A. :
Application No. 10/686,897 : DECISION GRANTING PETITION
Filed: October 15, 2003 : UNDER 37 CFR 1.137(b)
Attorney Docket No. 18511-010001 :

This is a decision on the petition, filed February 7, 2005, which is being treated as a petition under 37 CFR 1.137(b) to revive the instant non-provisional application for failure to timely notify the U.S. Patent and Trademark (USPTO) of the filing of an application in a foreign country, or under a multinational treaty that requires publication of applications eighteen months after filing. *See* 37 CFR 1.137(f).

The petition is **GRANTED**.

Petitioner states that the instant nonprovisional application is the subject of an application filed in an eighteen-month publication country on October 16, 2003. However, the USPTO was unintentionally not notified of this filing within 45 days subsequent to the filing of the subject application in an eighteen-month publication country.

In view of the above, this application became abandoned pursuant to 35 U.S.C. § 122(b)(2)(B)(iii) and 37 CFR 1.213(c) for failure to timely notify the Office of the filing of an application in a foreign country or under a multilateral international agreement that requires publication of applications 18 months after filing.

A petition to revive an application abandoned pursuant to 35 U.S.C. 122(b)(2)(B)(iii) for failure to notify the USPTO of a foreign filing must be accompanied by:

(1) the required reply which is met by the notification of such filing in a foreign country or under a multinational treaty;
(2) the petition fee as set forth in 37 CFR 1.17(m); and
(3) a statement that the entire delay in filing the required reply from the due date of the reply until the filing of a grantable petition was unintentional.

The instant petition has been found to be in compliance with 37 CFR 1.137(b). Accordingly, the failure to timely notify the USPTO of a foreign or international filing within 45 days after the date of filing of such foreign or international application as provided by 35 U.S.C. § 122(b)(2)(B)(iii) and 37 CFR 1.213(c) is accepted as having been unintentionally delayed.

The previous Request and Certification under 35 U.S.C. § 122(b)(2)(B)(i) has been rescinded. A Notice Regarding Rescission of Nonpublication Request which sets forth the projected publication date of August 25, 2005 accompanies this decision on petition.

There is no indication that the person signing the instant petition was ever given a power of attorney or authorization of agent to prosecute the above-identified application. If the person signing the instant petition desires to receive future correspondence regarding this application, the appropriate power of attorney or authorization of agent must be submitted. While a courtesy copy of this decision is being mailed to the person signing the instant petition, all future correspondence will be directed solely to the address currently of record until such time as appropriate instructions are received to the contrary.

It is not apparent whether the statement of unintentional delay was signed by a person who would have been in a position of knowing that the entire delay in filing the required reply from the due date for the reply until the filing of a grantable petition pursuant to 37 CFR 1.137(b) was unintentional. Nevertheless, in accordance with 37 CFR 10.18, the statement is accepted as constituting a certification of unintentional delay. However, in the event that petitioner has no knowledge that the delay was unintentional, petitioner must make such an inquiry to ascertain that, in fact, the delay was unintentional. If petitioner discovers that the delay was intentional, petitioner must notify the Office.

This matter is being referred to Technology Center Art Unit 2154 for examination in due course.

Telephone inquiries concerning this decision should be directed to the undersigned at (571) 272-3206.

Liana Chase
Petitions Examiner
Office of Petitions
Office of the Deputy Commissioner
for Patent Examination Policy

cc: DORIAN CARTWRIGHT
FISH & RICHARDSON, P.C.
500 ARGUELLO STREET, SUITE 500
REDWOOD CITY, CA 94063

ATTACHMENT: Notice Regarding Rescission of Nonpublication Request

UNITED STATES PATENT AND TRADEMARK OFFICE

Commissioner for Patents
United States Patent and Trademark Office
P.O. Box 1450
Alexandria, VA 22313-1450
www.uspto.gov

Sheldon & Mak, Inc.
225 South Lake Avenue
9th Floor
Pasadena, CA 91101

COPY MAILED

MAR 08 2005

OFFICE OF PETITIONS

In re Application of :
Zou and Wu : DECISION ON PETITION
Application No. 10/686,905 :
Filed: October 15, 2003 :
Attorney Docket No. 14584 :

This is a decision on the petition under 37 CFR 1.182, filed February 25, 2005, and resubmitted on March 1, 2005, to change the order of the names of the inventors.

The petition is **granted**.

The order of the names of the inventors will be changed as follows:

1. De Jun Zou
2. Hung Wen Wu

The Office records have been corrected to reflect the change of the order of inventorship as indicated above. A corrected filing receipt accompanies this decision.

This matter is being referred to the Office of Patent Publications.

Telephone inquiries concerning this matter may be directed to the undersigned at (571) 272-3211.

Christina Tartera Donnell

Christina Tartera Donnell
Senior Petitions Attorney
Office of Petitions

Enclosure: Corrected Filing Receipt

UNITED STATES PATENT AND TRADEMARK OFFICE

Commissioner for Patents
United States Patent and Trademark Office
P.O. Box 1450
Alexandria, VA 22313-1450
www.uspto.gov

Stephen B. Shear
Church & Dwight Co., Inc.
469 North Harrison Street
Princeton NJ 08543

COPY MAILED
MAY 0 2 2006
OFFICE OF PETITIONS

Applicant: Winston et al.
Appl. No.: 10/686,911
Filing Date: October 16, 2003
Title: TOOTH ENAMEL REJUVENATING TOOTHPASTE
Pub. No.: US 2005/0084461 A1
Pub. Date: April 21, 2005

This is a decision on the request for a corrected patent application publication under 37 CFR 1.221(b), filed on February 8, 2006, for the above-identified application

The request is DISMISSED.

The instant request is that the application be republished because the patent application publication contains a material error, as the publication does not include the claims filed with the application.

37 CFR 1.221 (b) is applicable "only when the Office makes a material mistake which is apparent from Office records.... Any request for a corrected publication or revised patent application publication other than provided as provided in paragraph (a) of this section must be filed within two months from the date of the patent application publication. This period is not extendable." A material mistake must affect the public's ability to appreciate the technical disclosure of the patent application publication, to determine the scope of the patent application publication, or to determine the scope of the provisional rights that an applicant may seek to enforce upon issuance of a patent. [1]

The request for corrected publication received on February 8, 2006, was not timely filed under 37 CFR 1.221(b).

The applicant is advised that a "request for republication of an application previously published" may be filed under 37 CFR 1.221 (a). Such a request for republication "must include a copy of the application compliance with the Office's electronic filing system requirements and be accompanied by the publication fee set forth in § 1.18 (d) and the processing fee set forth in § 1.17 (i)." If the request for republication does not comply with the electronic filing system

[1] Changes to Implement Eighteen-Month Publication of Patent Applications, 65 FR 57023, 57038 (Sept. 20, 2000), 1239, Off. Gaz. Pat. Office Notices 63, 75 (Oct. 10, 2000) (final rule).

requirements, the republication will not take place and the publication fee set forth in § 1.18 (d) will be refunded. The processing fee will be retained.

The amendment received by the Office on January 5, 2005, which was improperly scanned into this application and published has been placed in the closed folder

Any request for republication under 37 CFR 1.221(a), must be submitted via the EFS system and questions or request for reconsideration of the decision, should be addressed as follows:

By mail to: Mail Stop PGPUB
Commissioner for Patents
P.O. Box 1450
Alexandria, Va. 22313-1450

By facsimile: 571-273-8300

Inquiries relating to this matter may be directed to Mark Polutta at (571) 272-7709 (voice).

Mark O. Polutta
Senior Legal Advisor
Office of Patent Legal Administration
Office of the Deputy Commissioner
for Patent Examination Policy

UNITED STATES PATENT AND TRADEMARK OFFICE

Commissioner for Patents
United States Patent and Trademark Office
P.O. Box 1450
Alexandria, VA 22313-1450
www.uspto.gov

DEC 28 2004

STOCKWELL & ASSOCIATES, PSC
861 CORPORATE DRIVE, SUITE 201
LEXINGTON KY 40503

In re Application of	:	
Frank D. Markum	:	
Serial No.: 10/686,918	:	PETITION TO MAKE SPECIAL
Filed: October 16, 2003	:	
Attorney Docket No.: 1177-001	:	

This is in response to applicants= petition filed November 8, 2004, to make the above-identified application special under the provisions of 37 CFR 1.102(d) based on infringement.

Applicant has satisfied the provisions set forth in M.P.E.P. 708.02, II, relating to actual or potential infringement. Therefor the petition is **GRANTED**.

Applicant has also satisfied the provisions of M.P.E.P. 708.02, I, for manufacture and VIII, to make special for other reasons.

The application will be forwarded to the examiner for action on the merits commensurate with this decision.

Should there be any questions with regard to this letter please contact William R. Dixon, Jr. by letter addressed to the Director, Technology Center 1600, P.O. Box 1450, Alexandria, VA 22313-1450, or by telephone at 571-272-0519 or by facsimile transmission to the Office general facsimile number 703-872-9306.

William R. Dixon, Jr.
Special Program Examiner
Technology Center 1600

SPE RESPONSE FOR CERTIFICATE OF CORRECTION

Paper No.: _____

DATE : 11/08/07

TO SPE OF : ART UNIT 1623

SUBJECT : Request for Certificate of Correction for Appl. No.: **10/686918** Patent No.: **6979679**

Please respond to this request for a certificate of correction within 7 days.

Please review the requested changes/corrections as shown in the **COCIN** document(s) in the IFW application image. No new matter should be introduced, nor should the scope or meaning of the claims be changed.

Please complete the response (see below) and forward the completed response to scanning using document code **COCX**.

Angela Green
Certificates of Correction Branch
703.308.9380 ext. 183

Thank You For Your Assistance

The request for issuing the above-identified correction(s) is hereby:
Note your decision on the appropriate box.

- ☒ **Approved** — **All** changes apply.
- ☐ **Approved in Part** — Specify below which changes **do not** apply.
- ☐ **Denied** — State the reasons for denial below.

Comments: The C of C has been approved.

/S.A.Jiang/
SPE

1623
Art Unit

UNITED STATES PATENT AND TRADEMARK OFFICE

Commissioner for Patents
United States Patent and Trademark Office
P.O. Box 1450
Alexandria, VA 22313-1450
www.uspto.gov

FOLEY & LARDNER, LLP
1530 PAGE MILL ROAD
PALO ALTO, CA 94304

COPY MAILED
MAY 26 2006
OFFICE OF PETITIONS

In re Application of	:	
Porter, et. al.	:	DECISION ON REQUEST
Application No. 10/686,929	:	TO WITHDRAW FROM
Filed: October 15, 2003	:	RECORD
Attorney Docket No. 355492-4151	:	

This is a decision on the Request to Withdraw as attorney or agent of record under 37 CFR § 1.36(b), filed December 27, 2005.

The request is **NOT APPROVED**.

The Office cannot approve the request at this time since the reasons provided do not meet any of the conditions under the mandatory or permissive categories enumerated in 37 CFR 10.40. Section 10.40 of Title 37 of the Code of Federal Regulation states, "[a] practitioner shall not withdraw from employment in a proceeding before the Office without permission from the Office[.]" More specifically, 37 CFR 10.40 states, "[i]f paragraph (b) of this section is not applicable, a practitioner may not request permission to withdraw in matter pending before the Office unless such request or such withdrawal is" for one the permissive reasons listed in 37 CFR 10.40(c). The reasons set forth in the request, that the application has been transferred, does not meet any of the conditions set forth in 37 CFR 10.40.

All future communications from the Office will continue to be directed to the above address until otherwise notified by applicant.

There is an Office action mailed January 27, 2006 that requires a reply from the applicant.

Telephone inquiries concerning this decision should be directed to Andrea Smith at (571) 272-3226.

Andrea Smith
Petitions Examiner
Office of Petitions

Conferee:

cc: Christopher Porter
Medical Genesis, Inc.
19756 NE 127th Place
Woodinville, WA 98072

UNITED STATES PATENT AND TRADEMARK OFFICE

COMMISSIONER FOR PATENTS
UNITED STATES PATENT AND TRADEMARK OFFICE
P.O. BOX 1450
ALEXANDRIA, VA 22313-1450
www.uspto.gov

COPY MAILED

SEP 21 2006

OFFICE OF PETITIONS

FOLEY & LARDNER, LLP
1530 PAGE MILL ROAD
PALO ALTO, CA 94304

In re Application of :
Christopher H. Porter, et. al. :
Application No. 10/686,929 :
Filed: October 15, 2003 :
Attorney Docket No. 355492-4151 :

DECISION ON REQUEST TO WITHDRAW FROM RECORD

This is a decision on the request to withdraw as attorney or agent of record under 37 CFR § 1.36(b) or 37 CFR § 10.40, filed by facsimile transmission on June 1, 2006.

The request is **APPROVED**.

A grantable request to withdraw as attorney/agent of record must be signed by every attorney/agent seeking to withdraw or contain a clear indication that one attorney is signing on behalf of another/others. A request to withdraw will not be approved unless at least 30 (thirty) days would remain between the date of approval and the later of the expiration date of a time to file a response or the expiration date of the maximum time period which can be extended under 37 C.F.R. § 1.136(a).

The request was signed by Lorna Tanner on behalf of all the attorneys/agents associated with Customer No. 38706.

Lorna Tanner and all the attorneys/agents associated with Customer No. 38706 have been withdrawn. Therefore, applicant is reminded that there are no attorneys/agents of record at this time.

Since the request to change the correspondence address of record is that of the first named signing inventor, it has been accepted. Therefore, all future correspondence will be directed to the first named signing inventor, Christopher Porter, at the address indicated below until otherwise properly notified by the applicant.

Telephone inquiries concerning this decision should be directed to Andrea Smith at (571) 272-3226.

Andrea Smith
Petitions Examiner
Office of Petitions

cc: Christopher Porter
Medical Genesis, Inc.
19756 NE 127th Place
Woodinville, WA 98072

UNITED STATES PATENT AND TRADEMARK OFFICE

UNITED STATES DEPARTMENT OF COMMERCE
United States Patent and Trademark Office
Address: COMMISSIONER FOR PATENTS
P.O. Box 1450
Alexandria, Virginia 22313-1450
www.uspto.gov

APPLICATION NUMBER	FILING OR 371 (c) DATE	FIRST NAMED APPLICANT	ATTY. DOCKET NO./TITLE
10/686,929	10/15/2003	Christopher H. Porter	355492-4151

CONFIRMATION NO. 4569

38706
FOLEY & LARDNER LLP
1530 PAGE MILL ROAD
PALO ALTO, CA 94304

OC000000020535530

Date Mailed: 09/21/2006

NOTICE REGARDING CHANGE OF POWER OF ATTORNEY

This is in response to the Power of Attorney filed 06/01/2006.

- The withdrawal as attorney in this application has been accepted. Future correspondence will be mailed to the new address of record. 37 CFR 1.33.

ANDREA M SMITH
OP (571) 272-3226

FORMER ATTORNEY/AGENT COPY

UNITED STATES PATENT AND TRADEMARK OFFICE

Commissioner for Patents
United States Patent and Trademark Office
P.O. Box 1450
Alexandria, VA 22313-1450
www.uspto.gov

BARNES & THORNBURG LLP
(Roche)
11 SOUTH MERIDAN STREET
INDIANAPOLIS IN 46204

COPY MAILED

JUL 28 2009

OFFICE OF PETITIONS

In re Patent No. 7,488,602	:	
Pachl et al.	:	
Issue Date: February 10, 2009	:	DECISION ON REQUEST FOR
Application No. 10/686,970	:	RECONSIDERATION OF
Filed: October 16, 2003	:	PATENT TERM ADJUSTMENT
Attorney Docket No. 5727-73662	:	

This is in response to the "REQUEST FOR RECONSIDERATION OF PATENT TERM ADJUSTMENT UNDER 37 C.F.R. §1.705(D)" filed March 16, 2009, requesting that the patent term adjustment determination for the above-identified patent be corrected from seven hundred forty-seven (747) days to one thousand two hundred ninety-two (1,292) days.

The request for reconsideration of patent term adjustment is **DISMISSED** with respect to making any change in the patent term adjustment determination under 35 U.S.C. 154(b) of 747 days.

On February 10, 2009, the above-identified application matured into U.S. Patent No. 7,488,602 with a patent term adjustment of 747 days. This request for reconsideration of patent term adjustment (including the required fee) was timely filed within two months of the issue date of the patent. See 37 CFR 1.705(d).

Patentees request recalculation of the patent term adjustment based on the decision in Wyeth v. Dudas, 580 F. Supp. 2d 138, 88 U.S.P.Q. 2d 1538 (D.D.C. 2008). Patentees aver that the correct number of days of Patent Term Adjustment is 1,292 days under the court's interpretation of the overlap provision as set forth in Wyeth v. Dudas, 580 F. Supp. 2d 138, 88 U.S.P.Q. 2d 1538 (D.D.C. 2008). Patentees assert that pursuant to Wyeth, a PTO delay under 35 U.S.C. 154(b)(1)(A) overlaps with a delay under 35

U.S.C. 154(b)(1)(B) only if the delays "occur on the same day." More specifically, patentee states that:

> … patentee of the above-identified patent is entitled to credit for the sum of 545 days under 37 C.F.R.§ 1.702(a) and 848 days under 37 C.F.R. § 1.702(b) for a total of 1393 days subject to a reduction of 101 days under 37 C.F.R. § 1.704. There is no overlap between the delay periods under 37 C.F.R § 1.702(a) and 37 C.F.R. § 1.702(b) and, thus, pursuant [to] the Wyeth decision, no additional days have been deducted from the total credit under 37 C.F.R. § 1.702.

Excerpt from petition filed March 16, 2009, page 4.

Patentees' interpretation of the period of overlap has been considered, but found inconsistent with the Office's interpretation of the overlap provision, 35 U.S.C. 154(b)(2)(A). 35 U.S.C. 154(b)(2)(A) limits the adjustment of patent term, as follows:

> to the extent that the periods of delay attributable to grounds specified in paragraph (1) overlap, the period of any adjustment granted under this subsection shall not exceed the actual number of days the issuance of the patent was delayed.

As explained in *Explanation of 37 CFR 1.703(f)*[1] *and of the United States Patent and Trademark Office Interpretation of 35 U.S.C. 154(b)(2)(A)*, 69 Fed. Reg. 34283 (June 21, 2004), the Office interprets 35 U.S.C. 154(b)(2)(A) as permitting either patent term adjustment under 35 U.S.C. 154(b)(1)(A)(i)-(iv), or patent term adjustment under 35 U.S.C. 154(b)(1)(B), but not as permitting patent term adjustment under both 35 U.S.C. 154(b)(1)(A)(i)-(iv) and 154(b)(1)(B). Accordingly, the Office implements the overlap provision as follows:

---

[1] Likewise, 37 CFR 1.703(f) provides that:

> To the extent that periods of delay attributable to the grounds specified in §1.702 overlap, the period of adjustment granted under this section shall not exceed the actual number of days the issuance of the patent was delayed.

> If an application is entitled to an adjustment under 35 U.S.C. 154(b)(1)(B), the entire period during which the application was pending (except for periods excluded under 35 U.S.C. 154(b)(1)(B)(i)-(iii)), and not just the period beginning three years after the actual filing date of the application, is the period of delay under 35 U.S.C. 154(b)(1)(B) in determining whether periods of delay overlap under 35 U.S.C. 154(b)(2)(A). Thus, any days of delay for Office issuance of the patent more than 3 years after the filing date of the application, which overlap with the days of patent term adjustment accorded prior to the issuance of the patent will not result in any additional patent term adjustment. See 35 U.S.C. 154(b)(1)(B), 35 U.S.C. 154(b)(2)(A), and 37 CFR § 1.703(f). See *Changes to Implement Patent Term Adjustment Under Twenty Year Term; Final Rule*, 65 Fed. Reg. 54366 (Sept. 18, 2000). See also *Revision of Patent Term Extension and Patent Term Adjustment Provisions; Final Rule*, 69 Fed. Reg. 21704 (April 22, 2004), 1282 Off. Gaz. Pat. Office 100 (May 18, 2004). See also *Explanation of 37 CFR 1.703(f) and of the United States Patent and Trademark Office Interpretation of 35 U.S.C. 154(b)(2)(A)*, 69 Fed. Reg. 34283 (June 21, 2004).

Further, as stated in the *Explanation of 37 CFR 1.703(f) and of the United States Patent and Trademark Office Interpretation of 35 U.S.C. 154(b)(2)(A)*, the Office has consistently taken the position that if an application is entitled to an adjustment under the three-year pendency provision of 35 U.S.C. 154(b)(1)(B), the entire period during which the application was pending before the Office (except for periods excluded under 35 U.S.C. 154(b)(1)(B)(i)-(iii)), and not just the period beginning three years after the actual filing date of the application, is the relevant period under 35 U.S.C. 154(b)(1)(B) in determining whether periods of delay "overlap" under 35 U.S.C. 154(b)(2)(A).

This interpretation is consistent with the statute. Taken together the statute and rule provide that to the extent that periods of delay attributable to grounds specified in 35 U.S.C. 154(b)(1) and in corresponding 37 CFR 1.702 overlap, the period of adjustment granted shall not exceed the actual number of days the issuance of the patent was delayed.

In this instance, the relevant period under 35 U.S.C. 154(b)(1)(B) in determining whether periods of delay "overlap" under 35 U.S.C. 154(b)(2)(A) is the period during which the application was pending before the Office beginning on the application filing date under 35 U.S.C. 111(a) on October 16, 2003, and ending on the date the patent issued on February 10, 2009.

Pursuant to 35 U.S.C. 154(b)(1)(A) and 37 CFR 1.702(a)(1),[2] 545 days[3] of patent term adjustment were accorded during the pendency of the application for Office delay. Pursuant to 35 U.S.C. 154(b)(1)(B) and 37 CFR 1.702(b),[4] 848 days of patent term adjustment accrued for Office issuance of the patent more than three years after the filing date of the application.

The 848 days of patent term adjustment under 37 CFR 1.702(b) overlaps with the 545 days of patent term adjustment under 37

---

[2] 37 CFR 1.702, provides grounds for adjustment of patent term due to examination delay under the Patent Term Guarantee Act of 1999 (original applications, other than designs, filed on or after May 29, 2000).

> (a) Failure to take certain actions within specified time frames. Subject to the provisions of 35 U.S.C. 154(b) and this subpart, the term of an original patent shall be adjusted if the issuance of the patent was delayed due to the failure of the Office to:
>
> (1) Mail at least one of a notification under 35 U.S.C. 132 or a notice of allowance under 35 U.S.C. 151 not later than fourteen months after the date on which the application was filed under 35 U.S.C. 111(a) or fulfilled the requirements of 35 U.S.C. 371 in an international application;

[3] A non-final Office action was mailed on June 14, 2006, fourteen months and 545 days after the filing of the application on October 16, 2003.

[4] Pursuant to 35 U.S.C. 154(b)(1)(B), 37 CFR 1.702(b) provides, in pertinent part, that:

> Failure to issue a patent within three years of the actual filing date of the application. Subject to the provisions of 35 U.S.C. 154(b) and this subpart, the term of an original patent shall be adjusted if the issuance of the patent was delayed due to the failure of the Office to issue a patent within three years after the date on which the application was filed under 35 U.S.C. 111(a) or the national stage commenced under 35 U.S.C. 371(b) or (f) in an international application, but not including:
>
> (i) any time consumed by continued examination of the application requested by the applicant under section 132(b).

CFR 1.702(a)(1). Entry of both the 848 days and the 545 days is neither permitted nor warranted. 848 days is the actual number of days issuance of the patent was delayed.

Accordingly, at issuance, the Office properly entered only an additional period of adjustment of 303 days for the Office taking in excess of three years to issue the patent for a total of 848 days of Office delay.

In view thereof, the Office affirms the revised determination of patent term adjustment at the time of the issuance of the patent is 747 days.

The Office acknowledges the submission of the $200.00 fee set forth in 37 CFR 1.18(e). No additional fees are required.

Telephone inquiries specific to this matter should be directed to Kenya A. Mclaughlin, Petitions Attorney, at (571) 272-3222.

Christina Tartera Donnell

Christina Tartera Donnell
Senior Petitions Attorney
Office of Petitions

UNITED STATES PATENT AND TRADEMARK OFFICE

COMMISSIONER FOR PATENTS
UNITED STATES PATENT AND TRADEMARK OFFICE
P.O. BOX 1450
ALEXANDRIA, VA 22313-1450
www.uspto.gov

Patrick W. Rasche
Armstrong Teasdale, LLP
One Metropolitan Square – Ste. 2600
St. Louis, MO 63102

COPY MAILED

JAN 31 2006

OFFICE OF PETITIONS

In re Application of :
Robert Cantwell, et. al. :
Application No. 10/686,991 : ON PETITION
Filed: October 15, 2003 :
Attorney Docket No. 23937-43 :

This is a decision on the petition under 37 CFR 1.137(b), filed December 30, 2005, to revive the above-identified application.

The application became abandoned for failure to reply to the non-final Office action mailed September 10, 2005. A Notice of Abandonment was mailed on April 14, 2005.

The petition satisfies the requirements of 37 CFR 1.137(b) in that petitioner has supplied (1) the reply in the form of an amendment; (2) the petition fee of $1,500; and (3) an adequate statement of unintentional delay. Therefore, the petition is **GRANTED**.

The Revocation of Power of Attorney and New Power of Attorney and Change of Correspondence Address, filed December 30, 2005, has been accepted and made of record.

The application file is being referred to Technology Center Art Unit 3727, for review of the amendment filed with the instant petition.

Telephone inquiries concerning this decision should be directed to the undersigned at (571) 272-3226.

Andrea Smith
Petitions Examiner
Office of Petitions

UNITED STATES PATENT AND TRADEMARK OFFICE

Commissioner for Patents
United States Patent and Trademark Office
P.O. Box 1450
Alexandria, VA 22313-1450
www.uspto.gov

RICHARD R. MICHAUD
MCCORMICK, PAULDING & HUBER LLP
CITYPLACE II
185 ASYLUM STREET
HARTFORD, CT 06103

COPY MAILED

DEC 20 2004

OFFICE OF PETITIONS

In re Application of :
David C. Coffin, et al. :
Application No. 10/686,992 : ON PETITION
Filed: October 16, 2003 :
Attorney Docket No. 6579-76-1 :

This is a decision on the petition under 37 CFR 1.137(b), filed October 12, 2004, to revive the above-identified application.

The petition is **GRANTED.**

The above-identified application became abandoned for failure to reply in a timely manner to the non-final Office action mailed April 7, 2004, which set a shortened statutory period for reply of three (3) months. No extensions of time under the provisions of 37 CFR 1.136(a) were obtained. Accordingly, the application became abandoned on July 8, 2004.

Telephone inquiries concerning this decision should be directed to the undersigned at (571) 272-3229.

The application matter is being referred to Technology Center 3700, Art Unit 3724 for further processing.

Retta Williams

Retta Williams
Petitions Examiner
Office of Petitions
Office of the Deputy Commissioner
for Patent Examination Policy

SPE RESPONSE FOR CERTIFICATE OF CORRECTION

DATE 4/1/09 Paper No.: —

TO SPE OF : ART UNIT 1794

SUBJECT : Request for Certificate of Correction for Appl. No.: 10/687004 Patent No.: 7488520 B2

Please respond to this request for a certificate of correction within 7 days.

FOR IFW FILES:

Please review the requested changes/corrections as shown in the **COCIN** document(s) in the IFW application image. No new matter should be introduced, nor should the scope or meaning of the claims be changed.

Please complete the response (see below) and forward the completed response to scanning using document code **COCX**.

FOR PAPER FILES:

Please review the requested changes/corrections as shown in the attached certificate of correction. Please complete this form (see below) and forward it with the file to:

Certificates of Correction Branch (CofC)
South Tower - 9A22
Palm Location 7580

Virginia Tolbert
Certificates of Correction Branch
703-308-9390 ext. 113

Thank You For Your Assistance

The request for issuing the above-identified correction(s) is hereby:
Note your decision on the appropriate box.

☑ Approved	All changes apply.
☐ Approved in Part	Specify below which changes **do not** apply.
☐ Denied	State the reasons for denial below.

Comments: The Certificate of Correction indicates References cited, Page 3 "WO0137764" should read --WO00137764"
However, the patent actually indicates WO00137764.

RENA DYE
SUPERVISORY PATENT EXAMINER 1794
SPE Art Unit

UNITED STATES PATENT AND TRADEMARK OFFICE

Commissioner for Patents
United States Patent and Trademark Office
P.O. Box 1450
Alexandria, VA 22313-1450
www.uspto.gov

CASH KLEMCHUK POWERS TAYLOR LLP
CAMPBELL CENTRE II
8150 NORTH CENTRAL EXPRESSWAY, SUITE 1575
DALLAS, TX 75206

COPY MAILED

SEP 13 2007

OFFICE OF PETITIONS

In re Application of :
Bo Gunnar Ahlberg :
Application No. 10/687,053 : ON PETITION
Filed: October 17, 2003 :
Attorney Docket No. :

This is a decision on the petition under 37 CFR 1.137(b), filed May 11, 2007, to revive the above-identified application.

The petition is **GRANTED**.

The above-identified application became abandoned for failure to reply in a timely manner to the non-final Office action mailed August 18, 2006, which set a shortened statutory period for reply of three (3) months. No extension of time under the provisions of 37 CFR 1.136(a) were obtained. Accordingly, the above-identified application became abandoned on November 19, 2006.

Telephone inquiries concerning this decision should be directed to Irvin Dingle at (571) 272-3210.

This matter is being referred to Technology Center AU 3744 for further processing.

Irvin Dingle
Petitions Examiner
Office of Petitions

UNITED STATES PATENT AND TRADEMARK OFFICE

UNITED STATES DEPARTMENT OF COMMERCE
United States Patent and Trademark Office
Address: COMMISSIONER FOR PATENTS
P.O. Box 1450
Alexandria, Virginia 22313-1450
www.uspto.gov

APPLICATION NUMBER	FILING OR 371 (c) DATE	FIRST NAMED APPLICANT	ATTY. DOCKET NO./TITLE
10/687,053	10/17/2003	Bo Gunnar Ahlberg	

CONFIRMATION NO. 7517

OC000000025793132

41804
CASH KLEMCHUK POWERS TAYLOR LLP
CAMPBELL CENTRE II
8150 NORTH CENTRAL EXPRESSWAY, SUITE 1575
DALLAS, TX 75206

Date Mailed: 09/12/2007

NOTICE OF ACCEPTANCE OF POWER OF ATTORNEY

This is in response to the Power of Attorney filed 05/11/2007.

The Power of Attorney in this application is accepted. Correspondence in this application will be mailed to the above address as provided by 37 CFR 1.33.

UNITED STATES PATENT AND TRADEMARK OFFICE

UNITED STATES DEPARTMENT OF COMMERCE
United States Patent and Trademark Office
Address: COMMISSIONER FOR PATENTS
P.O. Box 1450
Alexandria, Virginia 22313-1450
www.uspto.gov

APPLICATION NUMBER	FILING OR 371 (c) DATE	FIRST NAMED APPLICANT	ATTY. DOCKET NO./TITLE
10/687,053	10/17/2003	Bo Gunnar Ahlberg	

CONFIRMATION NO. 7517

OC000000025793090

GUNNAR AHLBERG
P.O. BOX 820 821
DALLAS, TX 75382

Date Mailed: 09/12/2007

NOTICE REGARDING CHANGE OF POWER OF ATTORNEY

This is in response to the Power of Attorney filed 05/11/2007.

- The Power of Attorney to you in this application has been revoked by the applicant. Future correspondence will be mailed to the new address of record(37 CFR 1.33).

Office of Initial Patent Examination (571) 272-4000, or 1-800-PTO-9199
OFFICE COPY

UNITED STATES PATENT AND TRADEMARK OFFICE

COMMISSIONER FOR PATENTS
UNITED STATES PATENT AND TRADEMARK OFFICE
P.O. BOX 1450
ALEXANDRIA, VA 22313-1450
WWW.USPTO.GOV

Paper No. None

COPY MAILED

JAN 0 5 2005

OFFICE OF PETITIONS

GLAXOSMITHKLINE
Corporate Intellectual Property - UW2220
P.O. Box 1539
King of Prussia PA 19406-0939

In re Application of :
Claudine Bruck et al. :
Application No. 10/687,060 : DECISION ON PETITION
Filed: October 16, 2003 :
Attorney Docket No. B45110C1 :
Title: FUSION PROTEINS :
COMPRISING HIV-1 TAT AND/OR NEF :
PROTEINS :

This is a decision on the petition under 37 C.F.R. §1.53, filed November 1, 2004, requesting that Figure 2 be accorded a filing date of October 16, 2003, as part of the original disclosure.

The petition is **GRANTED-IN-PART**.

On October 16, 2003, the above-identified application was filed. On September 13, 2004, the Office of Initial Patent Examination (OIPE) mailed a "Notice to Comply with Requirements for Patent Applications Containing Nucleotide Sequence and/or Amino Acid Sequence Disclosures" (Notice), stating that the application had been accorded a filing date of October 16, 2003, and advising applicant both that a sequence listing would be required and that Figure 2 appeared to have been omitted.

In response, on November 1, 2004, applicants filed the present petition. The petition is further accompanied by the petition fee, and an explanation that Figure 2 was included on filing, but was not labeled. Petitioner has further included what appears to be a sequence listing.

Upon review of the record, Figure 2 has been located among the application papers, and it is obvious that it was included upon filing, and was simply unlabeled as a result of the applicant's filing error. Therefore, the application, including Figure 2, was complete on filing and entitled to a filing date of October 16, 2003. However, the Notice mailed on September 13, 2004 was correct in stating that Figure 2 appeared to have been omitted. Therefore, the Notice was properly mailed and will not be withdrawn.

The petition fee of $130.00 will not be refunded, as this petition was not necessitated by any error on the part of the Office.

Petitioner has set forth that the figure was constructively included on filing via incorporation by reference. However, since the figure was actually included, there is no need to seek entry via an incorporation by reference.

A preliminary amendment adding a label to the unlabeled figure should be filed before first action on the merits. Any such amendment will, of course, be reviewed by the examiner for new matter[1]. The amendment is not new matter if the substance was a part of the disclosure of the prior application.

The application file is being returned to the Office of Initial Patent Examination for further processing with a filing date of October 16, 2003, using the application papers filed on that date.

The general phone number for the Office of Petitions which should be used for status requests is (571) 272-3282. Telephone inquiries regarding *this decision* should be directed to the undersigned at (571) 272-3225.

Paul Shanoski

Paul Shanoski
Senior Attorney
Office of Petitions
United States Patent and Trademark Office

1 See MPEP 608.02(h) and 608.04.

UNITED STATES PATENT AND TRADEMARK OFFICE

Commissioner for Patents
United States Patent and Trademark Office
P.O. Box 1450
Alexandria, VA 22313-1450
www.uspto.gov

Peter K. Trzyna, Esq.
P.O. Box 7131
Chicago, IL 60680

COPY MAILED

AUG 16 2007

OFFICE OF PETITIONS

In re Application of
Thomas F. Conroy et al.
Application No. 10/687,063
Filed: October 16, 2003
Attorney Docket No. MCEA-P3-03

DECISION ON PETITION
TO MAKE SPECIAL UNDER
37 CFR 1.102(c)(1)

This is a decision on the petition under 37 CFR 1.102(c)(1), filed January 26, 2007, to make the above-identified application special based on applicant's age as set forth in M.P.E.P. § 708.02, Section IV.

The petition is **GRANTED**.

A grantable petition to make an application special under 37 CFR 1.102(c)(1) and MPEP § 708.02, Section IV: Applicant's Age must be accompanied by evidence showing that at least one of the applicants is 65 years of age, or more, such as a birth certificate or a statement by applicant. No fee is required

The instant petition includes a statement from one of the applicants declaring that he is 65 years of age or older.

Telephone inquiries concerning this decision should be directed to Terri Williams at 571-272-2991.

All other inquiries concerning either the examination or status of the application should be directed to the Technology Center.

The application is being forwarded to the Technology Center Art Unit 3691 for action on the merits commensurate with this decision.

T. Williams

Terri Williams
Petitions Examiner
Office of Petitions

UNITED STATES PATENT AND TRADEMARK OFFICE

UNITED STATES DEPARTMENT OF COMMERCE
United States Patent and Trademark Office
Address: COMMISSIONER FOR PATENTS
P.O. Box 1450
Alexandria, Virginia 22313-1450
www.uspto.gov

MINTZ, LEVIN, COHN, FERRIS, GLOVSKY & POPEO, P.C.
ONE FINANCIAL CENTER
BOSTON, MA 02111

Mail Date: 04/21/2010

Applicant	: Carsten Heuer	: DECISION ON REQUEST FOR
Patent Number	: 7584172	: RECALCULATION of PATENT
Issue Date	: 09/01/2009	: TERM ADJUSTMENT IN VIEW
Appliction No	: 10/687,074	: OF WYETH AND NOTICE OF INTENT TO
Filed	: 10/16/2003	: ISSUE CERTIFICATE OF CORRECTION
		:

The Request for Recalculation is **GRANTED** to the extent indicated.

The patent term adjustment has been determined to be **750** days. The USPTO will *sua sponte* issue a certificate of correction reflecting the amount of PTA days determined by the recalculation.

Prior to the issuance of the certificate of correction, the USPTO will afford patentee an opportunity to be heard and request reconsideration. Accordingly, patentee has **one month or thirty (30) days**, whichever is longer, to file a request for reconsideration of this patent term adjustment calculation. See 35 U.S.C. 154(b)(3)(B)(ii) and 37 CFR 1.322(a)(4). No extensions of time will be granted under 37 CFR 1.136.

Patentee should use document code PET.OP if electronically filing a request for reconsideration of this patent term adjustment calculation. The patentee must also include the information required by 37 CFR 1.705(b)(2) and the fee required by 37 CFR 1.18(e). If patentee does not file a timely request for reconsideration of this patent term adjustment calculation including the information required by 37 CFR 1.705(b)(2) and the fee required by 37 CFR 1.18(e), the USPTO will issue a certificate of correction reflecting the PTA determination noted above.

Patentee should be aware that in order to preserve the right to review in the United States District Court for the District of Columbia of the USPTO patent term adjustment determination, patentee must ensure that he or she also take the steps required under 35 U.S.C. 154(b)(4)(A) in a timely manner. Nothing in the request for recalculation should be construed as providing an alternative time frame for commencing a civil action under 35 U.S.C. 154(b)(4)(A).

Any questions concerning this decision should be directed to the Office of Patent Legal Administration at 571-272-7702.

UNITED STATES PATENT AND TRADEMARK OFFICE

COMMISSIONER FOR PATENTS
UNITED STATES PATENT AND TRADEMARK OFFICE
P.O. BOX 1450
ALEXANDRIA, VA 22313-1450
www.uspto.gov

MAIL

FEB 2 8 2005

DIRECTOR OFFICE
TECHNOLOGY CENTER 2600

KLARQUIST SPARKMAN LLP
121 S.W. SALMON STREET
SUITE 1600
PORTLAND OR 97204

In re Application of
Peter-Pike J. Sloan, et al.
Serial No.: 10/687,098
Filed: October 15, 2003
For: **BI-SCALE RADIANCE TRANSFER**

DECISION ON PETITION
ACCEPTANCE OF COLOR DRAWINGS

This is a decision on the petition pursuant to 37 C.F.R. § 1.84(a)(2), filed October 15, 2003, requesting acceptance of color drawings.

The petition requests that the color drawings/photographs, noted as figures 2, 4A-4E, 7A-7D, 8A-8B, 9A –9C, 10A – 10E, 11A – 11B and 12A – 12B be accepted in lieu of black and white drawings.

A grantable petition under 37 C.F.R. §1.84(a)(2) must be accompanied by a fee set forth under 37 C.F.R. § 1.17(h), 3 (three) set of the color drawings in question, and the specification must contain, or be amended to contain, the following language as the first paragraph in that portion of the specification relating to the brief description of the drawings:

"The file of this patent contains at least one drawing executed in color. Copies of this patent with color drawing(s) will be provided by the Patent and Trademark Office upon request and payment of the necessary fee."

A review of the file record reveals that applicant has provided three sets of color drawings, filed simultaneously with the subject petition and the required amendment to the specification.

Petitioner has satisfied the requirements of 37 C.F.R. §1.84(a)(2). Accordingly, the petition is **GRANTED**.

The application file will be forwarded to the examiner for action in appropriate turn.

Dwayne Bost
Special Program Examiner
Technology Center 2600
Communications

UNITED STATES PATENT AND TRADEMARK OFFICE

Commissioner for Patents
United States Patent and Trademark Office
P.O. Box 1450
Alexandria, VA 22313-1450
www.uspto.gov

SHERIDAN ROSS PC
1560 BROADWAY
SUITE 1200
DENVER, CO 80202

COPY MAILED

JUN 21 2007

OFFICE OF PETITIONS

In re Application of Hogarth et al. :
Application No. 10/687,109 : Decision on Petition
Filing Date: October 15, 2003 :
Attorney Docket No. 5478-4-1 :

This is a decision on the petition under 37 CFR 1.137(a), filed February 21, 2007, to revive the above-identified application. The petition is also being treated under 37 CFR 1.181 (no fee) as a petition to withdraw the holding of abandonment.

The petition under 37 CFR 1.181 is **granted**.

The petition under 37 CFR 1.137(a) is **dismissed as moot**.

A non-final Office action including a requirement for restriction/election mailed May 26, 2006.

The Office action was returned to the USPTO undelivered by the USPS. The outside of the envelope includes a stamp indicating, "UNDELIVERABLE AS ADDRESSED." The address on the Office action was correct and the exact reason the Office action was unable to be delivered is unknown.

A Notice of Abandonment was mailed January 22, 2007.

The application is not abandoned since the Office action was never delivered to petitioner. Therefore, the Notice of Abandonment is hereby vacated and the holding of abandonment withdrawn.

Since the petition has been granted under 37 CFR 1.181, petitioner's request to have the petition considered under 37 CFR 1.137(a) is dismissed as moot. No petition fee is required for a petition to withdraw holding of abandonment under 37 CFR 1.181. Therefore, the petition fee of $250 has been credited back to petitioner's deposit account.

Technology Center Art Unit 1631 will be informed of the instant decision. Thereafter, the Technology Center's technical support staff will mail a new copy of the non-final Office action originally mailed May 26, 2007. The time period for responding to the new non-final Office action will be set to run from the mailing date of the new non-final Office action.

Telephone inquiries regarding this communication should be directed to Petitions Attorney Steven Brantley at (571) 272-3203.

Charles Steven Brantley
Senior Petitions Attorney
Office of Petitions

UNITED STATES PATENT AND TRADEMARK OFFICE

COMMISSIONER FOR PATENTS
UNITED STATES PATENT AND TRADEMARK OFFICE
P.O. BOX 1450
ALEXANDRIA, VA 22313-1450
www.uspto.gov

John S. Egbert
Harrison & Egbert
412 Main Street, 7th Floor
Houston, TX 77002

COPY MAILED

APR 0 4 2006

OFFICE OF PETITIONS

In re Application of :
Cheng-Fang Hsiao :
Application No. 10/688,185 :
Filed: October 20, 2003 : DECISION
Attorney Docket No.: 1496-942 : ON PETITION
For: DIRECT CURRENT BRUSHLESS :
VIBRATION MOTOR :

In re Application of :
Hung-Chi Tsai :
Application No. 10/687,115 :
Filed: October 17, 2003 :
Attorney Docket No.: 1496-941 :
For: STRUCTURE FOR FASTENING :
ILLUMINATION TUBES OF A CLUSTER :
LAMP :

This is a decision on the Petition For A Question Not Specifically Provided for Under 37 CFR § 1.182, filed February 13, 2006, which is being treated as a petition to correct the files of the above-identified applications.

Applicant asserts that the Office switched application papers between the above-identified application serial number 10/688,185 ("the motor"), and application serial number 10/687,115 ("the lamp). Applicant asserts that through discussions with examiners for the applications, the examiners have agreed to and did in fact switch the assigned titles and docket numbers so that the motor examiner would keep the motor invention and the lamp examiner would keep the lamp invention.

However, Applicant provides that not all necessary documents and identifying information has been switched as agreed upon by the examiners. Petition at pp. 2-3.

Applicant provides that the identity of the motor inventor has not been switched to Cheng-Fang Hsaio, and the corresponding Declaration, certified copy of the priority document, and rescission of non-publication request have not been switched. Petition at p.3.

Applicant has filed with the petition previously amended Application Data Sheets to clarify the information and documentation to be switched. Id.

Applicant also provides that "there is no need for new Declarations concerning the 'name change' because the problem with the application is deeper than simply changing the name. The complete identity of the inventor is changed, and the proper declaration was accidentally filed in an unrelated application." Id.

Applicant requests correction of the switched documents and information between the switched applications, including correction of the identity of the inventors in the respective applications.

A review of the application files

10/688,185 (currently identified as "the motor")

A review of the return-receipt postcard filed by Applicant for the "STRUCTURE FOR FASTENING ILLUMINATION TUBES OF A CLUSTER LAMP" (lamp) reveals that it was filed October 20, 2003; was assigned application no. 10/688,185; contained 8 sheets of drawings; listed as the inventor Hung-Chi Tsai, and the docket number was 1496-942.

A Filing Receipt for Application 10/688,185 was mailed on January 26, 2004, indicating the filing date of October 20, 2003; the inventor as Hung-Chi Tsai; the attorney docket number as 1496-942, the application was assigned to art unit 2834, and contained 8 drawings, 1 claim and 1 independent claim.

A review of the file for the 10/688,185 reveals the following:

The original specification filed on October 20, 2003 was for the "DIRECT CURRENT BRUSHLESS VIBRATION MOTOR" (motor), and the title of the invention and drawings have been amended from lamp to motor, and two (2) sheets of drawings respectively.

The application transmittal remained the "STRUCTURE FOR FASTENING ILLUMINATION TUBES OF A CLUSTER LAMP" (lamp), the inventor as Hung-Chi Tsai; attorney docket number 1496-942, and included a Non-publication request. (The non-publication request has been rescinded).

The oath/declaration contained the same title (Lamp), and also lists the inventor as Hung-Chi Tsai.

The Application Data Sheet ("ADS"), also lists the title of the invention as lamp, the inventor as Hung-Chi Tsai, and the attorney docket number as 1496-942.

Summary: We have a specification for a motor with drawings for the motor, but we have a application transmittal form, oath declaration, and ADS for a lamp with a non-publication request intended for the lamp.

10/687,115 (the lamp")

A review of the return-receipt postcard filed by Applicant for the "DIRECT CURRENT BRUSHLESS VIBRATION MOTOR" (motor) reveals that it was filed October 17, 2003; was assigned application no. 10/687,115; contained 2 sheets of drawings; listed as the inventor Cheng-Fang Hsaio; the docket number was 1496-941, and a non-publication request was also filed.

A Filing Receipt was mailed on January 20, 2004, also indicating a motor, with a the filing date of October 17, 2003; listing the inventor as Cheng-Fang Hsiao; the attorney docket number also as 1496-941, the application was assigned to art unit 2875, and contained 2 drawings, 4 claims and 1 independent claim.

A review of the file for the above-identified application reveals that the application was filed on October 17, 2003.

The original specification in the application file was for the "STRUCTURE FOR FASTENING ILLUMINATION TUBES OF A CLUSTER LAMP" (lamp), and the title of the invention and drawings have been amended to also reflect a lamp and eight (8) sheets of drawings.

The application transmittal, however, remained that of the "DIRECT CURRENT BRUSHLESS VIBRATION MOTOR", the inventor as Cheng-Fang Hsiao; attorney docket number 1496-941, and did not include a Non-publication request.

The oath/declaration contained the same title (Motor), and listed the inventor as Cheng-Fang Hsiao.

The Application Data Sheet ("ADS"), listed the title of the motor; the inventor as Hsiao, and the attorney docket number as 1496-941.

Summary: We have a specification for a lamp, with drawings for the lamp, but we have a application transmittal form, oath declaration, and ADS for a motor.

Analysis

It is obvious that the specification, drawings, application transmittal, oath/declaration and ADS in application 10/688,185 were inadvertently switched with the drawings, application transmittal, oath/declaration and ADS in application 10/687,115. The Office apologizes for any inconvenience caused to Applicants.

The title and drawings in the respective applications have been amended, and the non-publication request, mis-filed in application 10/688,185, has been rescinded[1].

The oath/declaration and ADS filed in application 10/688,185 will be removed and transferred to application no. 10/687,115.

The oath/declaration, foreign priority document and ADS filed in application 10/687,115 will be removed and transferred to application no. 10/688,185.

The inventive entity has been corrected consistent with this Decision.

The $400.00 petition fee has been refunded to Petitioner's deposit account.

Telephone inquiries concerning this matter should be directed to the undersigned at (571) 272-3232.

Derek L. Woods
Attorney
Office of Petitions

[1] Because the non-publication request was included in the application transmittal document, which was mis-filed, and because it has since been rescinded (thereby correcting the mis-filing), the application transmittal documents will not be transferred.

SPE RESPONSE FOR CERTIFICATE OF CORRECTION

Paper No.: _____

DATE : 6/20/09

TO SPE OF : ART UNIT 2162

SUBJECT : Request for Certificate of Correction for Appl. No.: 09687130 Patent No.: 6978280 B1

Please respond to this request for a certificate of correction within 7 days.

FOR IFW FILES:

Please review the requested changes/corrections as shown in the **COCIN** document(s) in the IFW application image. No new matter should be introduced, nor should the scope or meaning of the claims be changed.

Please complete the response (see below) and forward the completed response to scanning using document code **COCX**.

FOR PAPER FILES:

Please review the requested changes/corrections as shown in the attached certificate of correction. Please complete this form (see below) and forward it with the file to:

Certificates of Correction Branch (CofC)
South Tower - 9A22
Palm Location 7580

You can fax the Directors/SPE response to 571-270-9990

LAMONTE NEWSOME
Certificates of Correction Branch
703-308-9390 ext. 112

Thank You For Your Assistance

The request for issuing the above-identified correction(s) is hereby:
Note your decision on the appropriate box.

- ☐ **Approved** — **All** changes apply.
- ☐ **Approved in Part** — Specify below which changes **do not** apply.
- ☐ **Denied** — State the reasons for denial below.

Comments: _____

_____

_____

_____

_____

/John E Breene/ 2162

UNITED STATES PATENT AND TRADEMARK OFFICE

COMMISSIONER FOR PATENTS
UNITED STATES PATENT AND TRADEMARK OFFICE
P.O. BOX 1450
ALEXANDRIA, VA 22313-1450
www.uspto.gov

Paper No.

COPY MAILED

MAY 2 0 2004

OFFICE OF PETITIONS

GREGORY D. DeGRAZIA
HOWARD & HOWARD ATTORNEYS, P.C.
39400 WOODWARD AVENUE
BLOOMFIELD HILLS, MI 48304-5151

In re Application of: :
Pellerin et al. :
Application No. 10/687,145 : DECISION GRANTING
Filed: October 16, 2003 : PETITION UNDER
Title of Invention: : 37 CFR 1.47(a)
CONCENTRIC BELL ASSEMBLY :

This is in response to a Petition for Filing by Assignee, which is properly treated as a petition under 37 CFR 1.47(a), filed April 1, 2004, to allow the other inventor(s) to proceed with the application on behalf of himself or herself and the nonsigning inventor[1].

The petition is **granted**.

The above-identified application and papers have been reviewed and found in compliance with 37 CFR 1.47(a). This application is hereby accorded Rule 1.47(a) status.

Petitioner has shown that the non-signing inventor, Chad A. Sinke, refuses to join in the application.

As provided in Rule 1.47(a), this Office will forward notice of this application's filing to the non-signing inventor at the addresses given in the Petition. Notice of the filing of this application will also be published in the Official Gazette.

The application file is being returned to the Office of Initial Patent Examination for continued processing.

Telephone inquiries related to this decision may be directed to the undersigned at (703) 305-0014.

Derek L. Woods
Petitions Attorney
Office of Petitions

[1] A petition under 37 CFR 1.47(b) is filed by an assignee when none of the inventors have executed the oath or declaration.

UNITED STATES PATENT AND TRADEMARK OFFICE

COMMISSIONER FOR PATENTS
UNITED STATES PATENT AND TRADEMARK OFFICE
P.O. BOX 1450
ALEXANDRIA, VA 22313-1450
www.uspto.gov

CHAD A. SINKE
3890 RAYE LANE
HARTLAND, MI 48353

COPY MAILED

MAY 2 0 2004

OFFICE OF PETITIONS

In re Application of: :
Pellerin et al. :
Application No. 10/687,145 : LETTER
Filed: October 16, 2003 :
Title of Invention: :
CONCENTRIC BELL ASSEMBLY :

Dear Mr. Sinke:

You are named as an inventor in the above-identified United States patent application filed under the provisions of 35 U.S.C. 116 (United States Code) and 37 CFR 1.47(b), Rules of Practice in Patent Cases. Should a patent be granted on the application you will be designated therein as a joint inventor.

As a named inventor you are entitled to inspect any paper in the file wrapper of the application, order copies of all or any part thereof (at a prepaid cost per 37 CFR 1.19) or make your position of record in the application. Alternatively, you may arrange to do any of the preceding through a registered patent attorney or agent presenting written authorization from you. If you care to join the application, counsel of record (see below) would presumably assist you. Joining in the application would entail the filing of an appropriate oath or declaration by you pursuant to 37 CFR 1.63.

Telephone inquiries regarding this communication should be directed to the undersigned at (703) 305-0014. Requests for information regarding your application should be directed to the File Information Unit at (703) 308-2733. Information regarding how to pay for and order a copy of the application, or a specific paper in the application, should be directed to Certification Division at (703) 308-9726 or 1-800-972-6382 (outside the Washington D.C. area).

Derek L. Woods
Petitions Attorney
Office of Petitions

cc: GREGORY D. DeGRAZIA
HOWARD & HOWARD ATTORNEYS, P.C.
39400 WOODWARD AVENUE
BLOOMFIELD HILLS, MI 48304-5151

UNITED STATES PATENT AND TRADEMARK OFFICE

COMMISSIONER FOR PATENTS
UNITED STATES PATENT AND TRADEMARK OFFICE
P.O. BOX 1450
ALEXANDRIA, VA 22313-1450
WWW.USPTO.GOV

Paper No. None

SNELL & WILMER
ONE ARIZONA CENTER
400 EAST VAN BUREN
PHOENIX AZ 85004-0001

COPY MAILED

MAR 1 4 2005

OFFICE OF PETITIONS

In re Application of :
David Hall :
Application No. 10/687,161 : DECISION ON PETITION
Filed: October 15, 2003 : UNDER 37 C.F.R. §1.137(f)
Attorney Docket No. 4432 P :
Title: TRANSPORTABLE TRAMPOLINE :
SYSTEM

This is a decision on the petition filed December 13, 2004, pursuant to 37 C.F.R. §1.137(f), to revive the above-identified application.

A grantable petition pursuant to 37 CFR 1.137(f) must be accompanied by:

(1) Notification of the filing of an application in a foreign country or under a multinational treaty that requires 18 month publication[1];
(2) The petition fee as set forth in 37 C.F.R. § 1.17(m), and;
(3) A statement that the entire delay in filing the notice from the date that the notice was due under 35 U.S.C. §122(b)(2)(B)(iii) until the date the notice was filed was unintentional. The Commissioner may require additional information where there is a question whether the delay was unintentional.

Petitioner states that the instant nonprovisional application is the subject of an application filed in either a foreign or an international application on September 30, 2004. However, the United States Patent and Trademark Office was unintentionally not notified of this filing within 45 days subsequent to the filing of the subject application in either an international application or a foreign country.

In view of the above, this application became abandoned pursuant to 35 U.S.C. §1.22(b)(2)(B)(iii) and 37 C.F.R. §1.213(c) for failure to timely notify the Office of the filing of

1 See PTO/SB/36 and paragraph on PTO/SB/64a for further information. Both may be downloaded at http://www.uspto.gov/web/forms/index.html.

either a foreign application or an application under a multilateral international agreement that requires publication of applications 18 months after filing.

On December 13, 2004, a Notice of Rescission of Nonpublication Request was filed with the Office along with the instant petition.

The petition under 37 C.F.R. §1.137(f) is **GRANTED**.

Petitioner has submitted the notification of either a foreign or an international filing, paid the petition fee, and has made the proper statement of unintentional delay.

The instant petition has been found to be in compliance with 37 C.F.R. §1.137(f). Accordingly, the failure to timely notify the Office of a foreign or international filing within 45 days after the date of filing of such foreign or international application as provided by 35 U.S.C. §122(b)(2)(B)(iii) and 37 C.F.R. §1.213(c) is accepted as having been unintentionally delayed.

The previous Request and Certification under 35 U.S.C. §122(b)(2)(B)(i), filed with the original application papers, has been rescinded. As set forth in the Communication Regarding Rescission of Nonpublication Request and/or Notice of Foreign Filing, the projected publication date is June 16, 2005.

It is noted that the address listed on the petition differs from the address of record. The application file does not indicate a change of correspondence address has been filed in this case, although the address given on the petition differs from the address of record. If petitioner desires to receive future correspondence regarding this application, the change of correspondence address must be submitted. A courtesy copy of this decision will be mailed to petitioner. However, all future correspondence will be directed to the address of record until such time as appropriate instructions are received to the contrary. Petitioner will not receive future correspondence unless a Change of Correspondence Address Form (PTO/SB/122) is submitted for the above-identified application. A blank Change of Correspondence Address Form (PTO/SB/122) may be found at http://www.uspto.gov/web/forms/sb0122.pdf.

After this decision is mailed, the application will be forwarded to Technology Center 3700.

The general phone number for the Office of Petitions which should be used for status requests is (571) 272-3282. Telephone inquiries regarding *this decision* should be directed to the undersigned at (571) 272-3225.

Paul Shanoski
Senior Attorney
Office of Petitions
United States Patent and Trademark Office

cc: Lloyd W. Sadler
15 West South Temple, Suite 1200
Salt Lake City, Utah 84101

UNITED STATES PATENT AND TRADEMARK OFFICE

COMMISSIONER FOR PATENTS
UNITED STATES PATENT AND TRADEMARK OFFICE
P.O. BOX 1450
ALEXANDRIA, VA 22313-1450
www.uspto.gov
DW 04-04

AGILENT TECHNOLOGIES, INC.
LEGAL DEPARTMENT, DL429
INTELLECTUAL PROPERTY ADMINISTRATION
P.O. BOX 7599
LOVELAND CO 80537-0599

COPY MAILED

APR 0 9 2004

OFFICE OF PETITIONS

In re Application of	:	
David R. Smith	:	
Application No. 10/687,179	:	DECISION REFUSING STATUS
Filed: 15 October, 2003	:	UNDER 37 CFR 1.47(b)
Attorney Docket No. 10020667-1	:	

This is in response to the petition filed on 9 February, 2004, which is treated as a petition filed under 37 CFR 1.47(b).

The petition is **DISMISSED**.

Rule 47 applicant is given TWO MONTHS from the mailing date of this decision to reply, correcting the below-noted deficiencies. Any reply should be entitled "Request for Reconsideration of Petition Under 37 CFR 1.47(b)," and should only address the deficiencies noted below, except that the reply may include an oath or declaration executed by the non-signing inventor. **FAILURE TO RESPOND WILL RESULT IN ABANDONMENT OF THE APPLICATION.** Extensions of time may be obtained in accordance with 37 CFR 1.136(a).

The above-identified application was filed on 15 October, 2003, without an executed oath or declaration. Accordingly, on 20 January, 2004, Initial Patent Examination Division mailed a Notice to File Missing Parts of Nonprovisional Application, requiring an executed oath or declaration and a surcharge for its late filing.

In response, on 9 February, 2004, petitioner filed the present petition and surcharge.

Petitioner asserts that the inventor has been sent a copy of the application, but has orally refused to sign the declaration. Petitioner has also enclosed a copy an Agreement Regarding Confidential Information and Proprietary Developments signed by the non-signing inventor.

A grantable petition under 37 CFR 1.47(b) requires:

(1) proof that the non-signing inventor cannot be reached or refuses to sign the oath or declaration after having been presented with the application papers (specification, claims and drawings);

(2) an acceptable oath or declaration in compliance with 35 U.S.C. §§ 115 and 116;

(3) the petition fee;

(4) a statement of the last known address of the non-signing inventor;

(5) proof of proprietary interest, and

(6) proof of irreparable damage.

The petition lacks items (1), (2), and (6).

As to item (1), petitioner must supply proof that a copy of the application (specification including claims, drawings, if any, and the declaration) was sent or given to the non-signing inventor for review.[1] Petitioner should submit a copy of the cover letter transmitting the application papers to the non-signing inventor or details given in an affidavit or declaration of facts by a person having first-hand knowledge of the details.

While petitioner's registered patent attorney states that a copy of the application was sent to the inventor, it is not clear whether this statement was made with firsthand knowledge. Petitioner should provide evidence that the application was sent or given to the non-signing inventor as stated above.

Likewise, before a *bona fide* refusal to sign can be alleged, petitioner must show that the application papers were sent or given to the non-signing inventor. If the inventor refuses to sign the declaration in writing after being sent or given the application, a copy of that written refusal should be supplied with any renewed petition. If the refusal was made orally to a person, then that person must provide details of the refusal in an affidavit or declaration of facts.

As to item (2), an oath or declaration for the patent application in compliance with 37 CFR 1.63 and 1.64 has not been presented. A declaration in compliance with 37 CFR 1.63, 1.64, and 1.67 must be presented, signed by all of the signing inventors, if any. If no inventor(s) will sign the declaration, the declaration may be signed on behalf of the inventor by an assignee. The oath or

[1] MPEP 409.03(d).

declaration must be signed by an officer of the corporation (president, vice president, secretary, or treasurer) on behalf of and as agent for the non-signing inventor(s). The officer must identify his/her title in the declaration, as well as his/her mailing address, residence, if the applicant lives at a different location from where he or she customarily receives mail, as well as the citizenship of individual signing on behalf of the non-signing inventor. If the oath or declaration is not signed by an officer of the corporation, then proof of authority of the person signing on behalf of the corporation must be submitted.[2]

As to item (6), petitioner must provide a statement that the filing is necessary to prevent irreparable damage or to preserve the rights of the parties.[3]

Further correspondence with respect to this matter should be addressed as follows:

By mail: Mail Stop Petition
Commissioner for Patents
P.O. Box 1450
Alexandria, VA 22313-1450

By FAX: (703) 872-9306
Attn: Office of Petitions

By hand: U.S. Patent and Trademark Office
2011 South Clark Place
Customer Window
Crystal Plaza 2, Lobby, Room 1B03
Arlington, VA 22202

The petition fee of $130.00 will be charged to counsel's deposit account No. 50-1078, as authorized in the present petition.

Telephone inquiries related to this decision should be directed to the undersigned at (703)308-6918.

D Wood

Douglas I. Wood
Senior Petitions Attorney
Office of Petitions

[2] MPEP 409.03(b).

[3] MPEP 409.03(g).

UNITED STATES PATENT AND TRADEMARK OFFICE

Commissioner for Patents
United States Patent and Trademark Office
P.O. Box 1450
Alexandria, VA 22313-1450
www.uspto.gov
DIW 08-04

AGILENT TECHNOLOGIES, INC.
LEGAL DEPARTMENT, DL429
INTELLECTUAL PROPERTY ADMINISTRATION
P.O. BOX 7599
LOVELAND CO 80537-0599

COPY MAILED

JUN 2 1 2004

OFFICE OF PETITIONS

In re Application of	:	
David R. Smith	:	
Application No. 10/687,179	:	DECISION ACCORDING STATUS
Filed: 15 October, 2003	:	UNDER 37 CFR 1.47(b)
Attorney Docket No. 10020667-1	:	

This is in response to the renewed petition under 37 CFR 1.47(b), filed on 14 June, 2004 (certificate of mailing date 8 June, 2004).

The petition is **GRANTED**.

Petitioner has shown, via the declaration of registered patent attorney Robert T. Martin, that a copy of the application was sent to the non-signing inventor on two occasions. The inventor, however, has failed to sign and return the declaration naming him as the sole inventor. Additionally, petitioner has shown proprietary interest by providing a copy of the Agreement Regarding Confidential Information and Proprietary Developments between the non-signing inventor and Agilent Technologies, signed by the non-signing inventor, David R. Smith. Lastly, petitioner has submitted a declaration in compliance with 37 CFR 1.63 and 1.64 and has demonstrated that such action is necessary to prevent irreparable damage.

This application and papers have been reviewed and found in compliance with 37 CFR 1.47(b). This application is hereby accorded Rule 1.47(b) status.

As provided in Rule 1.47(c), this Office will forward notice of this application's filing to the non-signing inventor. Notice of the filing of this application will also be published in the Official Gazette.

The application file is being forwarded to Technology Center 2600 for examination in due course.

Telephone inquiries regarding this communication should be directed to the undersigned at 703.308.6918.

D Wood

Douglas I. Wood
Senior Petitions Attorney
Office of Petitions

UNITED STATES PATENT AND TRADEMARK OFFICE

Commissioner for Patents
United States Patent and Trademark Office
P.O. Box 1450
Alexandria, VA 22313-1450
www.uspto.gov
DIW 06-04

David R. Smith
5454 Milligan Drive
San Jose CA 95124

COPY MAILED

JUN 2 1 2004

OFFICE OF PETITIONS

In re Application of
David R. Smith
Application No. 10/687,179
Filed: 15 October, 2003
For: LAMINOGRAPH DESHADOWING

Dear Mr. Smith:

You are named as the sole inventor in the above identified United States patent application, filed under the provisions of 35 U.S.C. 118 (United States Code), and 37 CFR 1.47(b), Rules of Practice in Patent Cases. Should a patent be granted on the application you will be designated therein as the sole inventor.

As the named inventor you are entitled to inspect any paper in the file wrapper of the application, order copies of all or any part thereof (at a prepaid cost per 37 CFR 1.19) or make your position of record in the application. Alternatively, you may arrange to do any of the preceding through a registered patent attorney or agent presenting written authorization from you. If you care to join the application, counsel of record (see below) would presumably assist you. Joining in the application would entail the filing of an appropriate oath or declaration by you pursuant to 37 CFR 1.63.

Telephone inquiries regarding this communication should be directed to the undersigned at 703 308-6918. Requests for information regarding your application should be directed to the File Information Unit at (703)308-2733. Information regarding how to pay for and order a copy of the application, or a specific paper in the application, should be directed to Certification Division at (703)308-9726 or 1(800)972-6382 (outside the Washington D.C. area).

D Wood

Douglas I. Wood
Senior Petitions Attorney
Office of Petitions

AGILENT TECHNOLOGIES, INC.
LEGAL DEPARTMENT, DL429
INTELLECTUAL PROPERTY ADMINISTRATION
P.O. BOX 7599
LOVELAND CO 80537-0599

UNITED STATES PATENT AND TRADEMARK OFFICE

Commissioner for Patents
United States Patent and Trademark Office
P.O. Box 1450
Alexandria, VA 22313-1450
www.uspto.gov
DIW Jan-06

FULBRIGHT AND JAWORSKI LLP
555 S. FLOWER STREET, 41ST FLOOR
LOS ANGELES CA 90071

COPY MAILED

JAN 2 4 2006

OFFICE OF PETITIONS

In re Application of :
Lionell K. Griffith :
Application No. 10/687,180 : DECISION ON PETITION
Filed: 15 October, 2003 :
Attorney Docket No. 7171-109/10207852 :

This is a decision on the petition filed on 29 November, 2005, under 37 CFR 1.137(b),[1] to revive the above-identified application.

The petition is **GRANTED**.

The application became abandoned on 26 October, 2005, for failure to timely file a proper reply to the final Office action mailed on 25 May, 2005, which set a three (3) month shortened statutory period for reply. On 11 October, 2005, an amendment after final rejection and request for a two (2) month extension of time in accordance with 37 CFR 1.136(a) were filed. However, the examiner determined that the amendment did not *prima facie* place

---

[1] Effective December 1, 1997, the provisions of 37 CFR 1.137(b) now provide that where the delay in reply was unintentional, a petition may be filed to revive an abandoned application or a lapsed patent pursuant to 37 CFR 1.137(b). A grantable petition filed under the provisions of 37 CFR 1.137(b) must be accompanied by:

(1) the required reply, unless previously filed. In a nonprovisional application abandoned for failure to prosecute, the required reply may be met by the filing of a continuing application. In a nonprovisional utility or plant application filed on or after June 8, 1995, and abandoned for failure to prosecute, the required reply may also be met by the filing of a request for continuing examination in compliance with § 1.114. In an application or patent, abandoned or lapsed for failure to pay the issue fee or any portion thereof, the required reply must be the payment of the issue fee or any outstanding balance thereof. In an application, abandoned for failure to pay the publication fee, the required reply must include payment of the publication fee.

(2) the petition fee as set forth in 37 CFR 1.17(m);

(3) a statement that the entire delay in filing the required reply from the due date for the reply until the filing of a grantable petition pursuant to 37 CFR 1.137(b) was unintentional. The Commissioner may required additional information where there is a question whether the delay was unintentional; and

(4) any terminal disclaimer (and fee as set forth in 37 CFR 1.20(d)) required pursuant to 37 CFR 1.137(c)).

the application in condition for allowance. An Advisory Action Before the Filing of An Appeal Brief was mailed on 26 October, 2005. The filing of the present petition precedes the mailing of Notice of Abandonment.

Petitioner has filed a Request for Continued Examination (RCE) and fee as the required reply, and indicated that the previously filed amendment after final rejection is the submission required by 37 CFR 1.114.

This application is being referred to Technology Center Art Unit 2882 for further processing.

Telephone inquiries concerning this matter may be directed to the undersigned at (571) 272-3231.

Douglas I. Wood
Senior Petitions Attorney
Office of Petitions

UNITED STATES PATENT AND TRADEMARK OFFICE

Commissioner for Patents
United States Patent and Trademark Office
P.O. Box 1450
Alexandria, VA 22313-1450
www.uspto.gov

THE WALT DISNEY COMPANY
C/O GREENBERG TRAURIG LLP
2450 COLORADO AVENUE SUITE 400E
SANTA MONICA CA 90404

MAILED

APR 2 0 2007

Technology Center 2100

In re Application of:
Gregory B. Hale et al.
Appl. No.: 10/687,190
Filed: October 15, 2003
Attorney Docket : 58085-010204
For: MANAGEMENT OF THE FLOW OF PERSONS IN RELATION TO CENTERS OF CROWD CONCENTRATION

DECISION ON PETITION
UNDER 37 CFR § 1.59

This is a decision on the petition under 37 CFR § 1.59(b), filed on March 14, 2006 to expunge the Information Disclosure Statement (IDS) submitted on March 14, 2006.

The petition is **GRANTED**.

Petitioner requests that the IDS submitted on March 14, 2006 listing two letters identified in the petition be expunged from the record. Petitioner states that the letters listed on the IDS submitted on March 14, 2006 is proprietary to Applicant and the information has not been otherwise made public once received. The petition fee set forth in 37 CFR § 1.17(g) has been paid.

Applicant is required to retain the expunged material(s) for the life of any patent, which issues on the above-identified application.

The expunged materials have been scanned into image; thus, cannot be returned. However, the expunged materials have been closed from public view.

It is noted that the instant application has been published on September 2, 2004. Thus, the IDS submitted on March 14, 2006 may have already been made available to the public and subject to copying by the public. According, the Office cannot guarantee that the information being closed as a result of this decision was not previously accessed by the public.

Any inquiry concerning this decision should be directed to the undersigned whose telephone number is (571) 272-3719.

for

Kakali Chaki
Quality Assurance Specialist
Technology Center 2100

UNITED STATES PATENT AND TRADEMARK OFFICE

Commissioner for Patents
United States Patent and Trademark Office
P.O. Box 1450
Alexandria, VA 22313-1450
www.uspto.gov

MAILED

APR 12 2007

Technology Center 2100

THE WALT DISNEY COMPANY
C/O GREENBERG TRAURIG LLP
2450 COLORADO AVENUE SUITE 400E
SANTA MONICA CA 90404

In re Application of:
Gregory B. Hale et al.
Appl. No.: 10/687,191
Filed: October 15, 2003
Attorney Docket : 58085-010201
For: MANAGEMENT OF THE FLOW OF PERSONS IN RELATION TO CENTERS OF CROWD CONCENTRATION

DECISION ON PETITION
UNDER 37 CFR § 1.59

This is a decision on the petition under 37 CFR § 1.59(b), filed on March 14, 2006 to expunge the Information Disclosure Statement (IDS) submitted on March 14, 2006.

The petition is **DISMISSED**.

Petitioner requests that the IDS submitted on March 14, 2006 listing two letters identified in the petition be expunged from the record. Petitioner states that the letters listed on the IDS submitted on March 14, 2006 is proprietary to Applicant and the information has not been otherwise made public once received. The petition fee set forth in 37 CFR § 1.17(g) has been paid.

The petition is premature because the application has not been allowed or abandoned. Accordingly, it is not appropriate to make a final determination of whether or not the material requested to be expunged is "material," with "materiality" being defined as any information which the examiner considers as being important to a determination of patentability of the claims. Thus, the petition to expunge must be dismissed at this time.

During prosecution on the merits, the examiner will determine whether or not the identified documents are considered to be "material." Once prosecution on the merits is closed, applicant may re-submit a petition to expunge the information. No further fee is required for such a second submission of a petition under 37 CFR § 1.59 to expunge information. If the information is not considered by the examiner to be material, the information will be returned to applicant.

The identified documents are currently not available for public view.

Any inquiry concerning this decision should be directed to the undersigned whose telephone number is (571) 272-3719.

Kakali Chaki
Quality Assurance Specialist
Technology Center 2100

UNITED STATES PATENT AND TRADEMARK OFFICE

Commissioner for Patents
United States Patent and Trademark Office
P.O. Box 1450
Alexandria, VA 22313-1450
www.uspto.gov

FISH & RICHARDSON, PC
P.O BOX 1022
MINNEAPOLIS, MN 55440-1022

COPY MAILED

NOV 10 2008

OFFICE OF PETITIONS

In re Application of :
Edward A. Hubbard, et al. :
Application No. 10/687,210 : DECISION ON PETITION
Filed: October 16, 2003 : TO WITHDRAW
Attorney Docket No. 22265-001001 : FROM RECORD
:

This is a decision on the Request to Withdraw as attorney or agent of record under 37 C.F.R. § 1.36(b), filed March 31, 2008.

The request is **DISMISSED** as moot.

A review of the file record indicates that the power of attorney to Fish & Richardson, PC has been revoked by the assignee of the patent application on May 20, 2008. Accordingly, the request to withdraw under 37 C.F.R. § 1.36(b) is moot.

All future communications from the Office will continue to be directed to the below-listed address until otherwise notified by applicant.

Telephone inquires concerning this decision should be directed to undersigned at 571-272- 1642.

/AMW/
April M. Wise
Petitions Examiner
Office of Petitions

cc: UNIVA UD
9737 GREAT HILLS TRAIL
SUITE 300
AUSTIN, TX 78759

UNITED STATES PATENT AND TRADEMARK OFFICE

Commissioner for Patents
United States Patent and Trademark Office
P.O. Box 1450
Alexandria, VA 22313-1450
www.uspto.gov

FISH & RICHARDSON P.C.
P.O BOX 1022
MINNEAPOLIS, MN 55440-1022

COPY MAILED

MAR 02 2009

OFFICE OF PETITIONS

In re Application of :
Edward A. Hubbard, et al. :
Application No. 10/687,210 : DECISION ON PETITION
Filed: October 16, 2003 : TO WITHDRAW
Attorney Docket No. NING0012 : FROM RECORD
:

This is a decision on the Request to Withdraw as attorney or agent under 37 C.F.R. § 1.36(b) filed January 6, 2009.

The request is **NOT APPROVED**.

A review of the file record indicates that Fish & Richardson, PC does not have power of attorney in this patent application. See 37 C.F.R. § 10.40. Accordingly, the request to withdraw under 37 C.F.R. § 1.36(b) is not applicable.

All future communications from the Office will continue to be directed to the below-listed address until otherwise properly notified by the applicant.

Telephone inquires concerning this decision should be directed to undersigned at 571-272-1642.

/AMW/
April M. Wise
Petitions Examiner
Office of Petitions

cc: UNIVA UD
9737 GREAT HILLS TRAIL
SUITE 300
AUSTIN, TX 78759

SPE RESPONSE FOR CERTIFICATE OF CORRECTION

DATE : 7/30/09 Paper No.: —

TO SPE OF : ART UNIT 2419

SUBJECT : Request for Certificate of Correction for Appl. No.: 10/687215 Patent No.: 7554959 B1

Please respond to this request for a certificate of correction within 7 days.

FOR IFW FILES:

Please review the requested changes/corrections as shown in the **COCIN** document(s) in the IFW application image. No new matter should be introduced, nor should the scope or meaning of the claims be changed.

Please complete the response (see below) and forward the completed response to scanning using document code **COCX**.

FOR PAPER FILES:

Please review the requested changes/corrections as shown in the attached certificate of correction. Please complete this form (see below) and forward it with the file to:

Certificates of Correction Branch (C of C)
Randolph Square 9D62-B
Palm Location 7580

Virginia Tolbert
Certificates of Correction Branch
703-756-1591

Thank You For Your Assistance

The request for issuing the above-identified correction(s) is hereby:
Note your decision on the appropriate box.

- ☑ **Approved** — All changes apply.
- ☐ **Approved in Part** — Specify below which changes **do not** apply.
- ☐ **Denied** — State the reasons for denial below.

Comments: OK to enter F.D

SPE 2419
SPE **Art Unit**

UNITED STATES PATENT AND TRADEMARK OFFICE

UNITED STATES DEPARTMENT OF COMMERCE
United States Patent and Trademark Office
Address: COMMISSIONER FOR PATENTS
P.O. Box 1450
Alexandria, Virginia 22313-1450
www.uspto.gov

APPLICATION NO.	FILING DATE	FIRST NAMED INVENTOR	ATTORNEY DOCKET NO.	CONFIRMATION NO.
10/687,226	10/15/2003	Gregory B. Hale	58085-010203	8102

46560 7590 04/29/2008

THE WALT DISNEY COMPANY
C/O GREENBERG TRAURIG LLP
2450 COLORADO AVENUE SUITE 400E
SANTA MONICA, CA 90404

EXAMINER	
HAIDER, FAWAAD	

ART UNIT	PAPER NUMBER
3627	

MAIL DATE	DELIVERY MODE
04/29/2008	PAPER

Please find below and/or attached an Office communication concerning this application or proceeding.

The time period for reply, if any, is set in the attached communication.

UNITED STATES PATENT AND TRADEMARK OFFICE

Commissioner for Patents
United States Patent and Trademark Office
P.O. Box 1450
Alexandria, VA 22313-1450
www.uspto.gov

THE WALT DISNEY COMPANY
C/O GREENBERG TRAURIG LLP
2450 COLORADO AVENUE SUITE 400E
SANTA MONICA, CA 90404

MAILED
FROM DIRECTORS OFFICE

APR 29 2008

TECHNOLOGY CENTER 3600

In re Application of
HALE, Gregory B.
Application No. 10/687,226
Filed: October 15, 2003
For: **MANAGEMENT OF THE FLOW OF PERSONS IN RELATION TO CENTERS OF CROWD CONCENTRATION VIA TELEVISION CONTROL**

RESPONSE TO PETITION TO EXPUNGE FILED UNDER 37 CFR 1.59(b)

This is a response to the petition under 37 CFR 1.59(b), filed March 16, 2006, to expunge information from the above identified application.

The decision on the petition will be held in abeyance until allowance of the application or mailing of an *Ex parte Quayle* action or a Notice of Abandonment, at which time the petition will be decided.

Petitioner requests that i) Letter dated 01-05-1991, 4 pages (included in Envelope A), and ii) Letter dated 01-30-1991, 2 pages (included in Envelope A) filed March 16, 2006, be expunged from the record. Petitioner states either: (A) that the information contains trade secret material, proprietary material and/or material that is subject to a protective order which has not been made public; or (B) that the information submitted was unintentionally submitted and the failure to obtain its return would cause irreparable harm to the party who submitted the information or to the party in interest on whose behalf the information was submitted, and the information has not otherwise been made public. The petition fee set forth in 37 CFR 1.17(g) has been paid.

The decision on the petition is held in abeyance because prosecution on the merits is not closed. Accordingly, it is not appropriate to make a final determination of whether or not the material requested to be expunged is "material," with "materiality" being defined as any information which the examiner considers as being important to a determination of patentability of the claims. Thus, the decision on the petition to expunge must be held in abeyance at this time.

In the meantime, the document will be closed whereby any non-Patent and Trademark Office personnel will be precluded from viewing or having access to the document, such as via public PAIRs.

During prosecution on the merits, the examiner will determine whether or not the identified document is considered to be "material". If the information is not considered by the examiner to be material, the information will be removed from the official file.

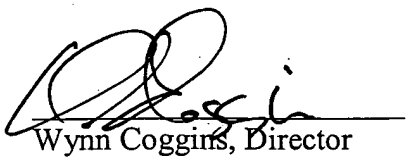

Wynn Coggins, Director
Patent Technology Center 3600
(571) 272-5350

FZ: 4/19/2008

TC

UNITED STATES PATENT AND TRADEMARK OFFICE

Commissioner for Patents
United States Patent and Trademark Office
P.O. Box 1450
Alexandria, VA 22313-1450
www.uspto.gov

MICHAEL P. MORRIS
BOEHRINGER INGELHEIM USA CORPORATION
900 RIDGEBURY ROAD
P. O. BOX 368
RIDGEFIELD CT 06877-0368

MAILED

APR 14 2010

OFFICE OF PETITIONS

In re Patent No. 7,595,312	:	
Rudolf et al.	:	DECISION ON
Issue Date: 09/29/2009	:	APPLICATION FOR
Application No. 10/687262	:	PATENT TERM ADJUSTMENT
Filing or 371(c) Date: 10/16/2003	:	and
Attorney Docket No.	:	NOTICE OF INTENT TO ISSUE
01-1402	:	CERTIFICAE OF CORRECTION

This is a decision on the petition filed on November 24, 2009, which is being treated as a petition under 37 CFR 1.705(d), requesting that the patent term adjustment indicated on the above-identified patent be corrected to indicate that the term of the above-identified patent is extended or adjusted by six hundred thirty-five (635) days.

The petition to correct the patent term adjustment indicated on the above-identified patent to indicate that the term of the above-identified patent is extended or adjusted by six hundred thirty-five (635) days is **GRANTED to the extent indicated herein.**

As the period from the filing date of the request for continued examination (RCE) to the issue date of the patent is not included in the "B" delay period, the over three year period begins on October 17, 2006 and ends on April 28, 2008, the day before the RCE was filed, and is 560 (not 561) days. See, 35 U.S.C. 154(b)(1)(B)(i). As such, the patent term adjustment is 634 not 635 days.

The Office will *sua sponte* issue a certificate of correction. Pursuant to 37 CFR 1.322, the Office will not issue a certificate of correction without first providing assignee or patentee an opportunity to be heard. Accordingly, patentees are given **one (1) month or thirty (30) days,** whichever is longer, from the mail date of this decision to respond. No extensions of time will be granted under § 1.136.

The Office acknowledges submission of the $200.00 fee set forth in 37 CFR 1.18(e). No additional fees are required.

The application is being forwarded to the Certificates of Branch for issuance of a certificate of correction. The Office will issue a certificate of correction indicating that the term of the above-identified patent is extended or adjusted by **six hundred thirty-four (634) days**.

Telephone inquiries specific to this matter should be directed to the undersigned at (571) 272-3232.

/Derek L. Woods/

Derek L. Woods
Attorney
Office of Petitions

Enclosure: Copy of DRAFT Certificate of Correction

UNITED STATES PATENT AND TRADEMARK OFFICE

CERTIFICATE OF CORRECTION

PATENT : 7,595,312 B2

DATED : **September 29, 2009**

INVENTOR(S) : Rudolf et al.

It is certified that error appears in the above-identified patent and that said Letters Patent is hereby corrected as shown below:

On the cover page,

[*] Notice: Subject to any disclaimer, the term of this patent is extended or adjusted under 35 USC 154(b) by 203 days.

Delete the phrase "by 203 days" and insert – by 634 days--

DATE 9-12-07

APPLICATION NUMBER 10168730 3

DOC CODE pet Lec. te

DOC DATE 9/17/07

DELIVER THE ATTACHED FIFLE/DOCUMENT TO THE TC SCANNING CENTER.

CONTRACTOR: THE ATTACHED FILE/DOCUMENT MUST BE INDEXED AND SCANNED INTO IFW WITHIN **8** WORK HOURS; UPLOADING OF THE SCANNED IMAGES SHOULD OCCUR NO LATER THAN **16** WORK HOURS FOLLOWING RECEIPT OF THIS REQUEST

AFTER SCANNING, ORIGINAL DOCUMENTS SHOULD BE BOXED IN ACCORDANCE WITH INSTRUCTIONS

UNITED STATES PATENT AND TRADEMARK OFFICE

Commissioner for Patents
United States Patent and Trademark Office
P.O. Box 1450
Alexandria, VA 22313-1450
www.uspto.gov

COPY MAILED

SEP 17 2007

OFFICE OF PETITIONS

TEXAS INSTRUMENTS INCORPORATED
P O BOX 655474, M/S 3999
DALLAS TX 75265

In re Application of :
Onggoosanusi, et al. : DECISION ON PETITION
Application No. 10/687,303 :
Filed: October 14, 2003 :
Docket No.: TI-35477 :

This is a decision on the petition under 37 C.F.R. § 1.137(b), filed July 30, 2007, to revive the above-identified application.

The petition is **GRANTED**.

This application became abandoned March 15, 2007 for failure to timely reply to the non-final Office action mailed December 14, 2006. The non-final Office action set a three (3) month shortened statutory period of time for reply. No extensions of time in accordance with 37 C.F.R. § 1.136 were timely requested. This decision precedes Notice of Abandonment.

A grantable petition pursuant to 37 C.F.R. § 1.137(b) must be accompanied by: (1) the required reply to the outstanding Office action or notice, unless previously filed; (2) the petition fee as set forth in 37 C.F.R. § 1.17(m); (3) a statement that the entire delay in filing the required reply from the due date for the reply until the filing of a grantable petition pursuant to 37 C.F.R. § 1.137(b) was unintentional; and (4) any terminal disclaimer (and fee set forth in 37 C.F.R. § 1.20(d)) required pursuant to 37 C.F.R. § 1.137(c).

The instant petition has been reviewed and found in compliance with the provisions of 37 C.F.R. § 1.137(b). Accordingly, the failure to timely submit a proper reply to the non-final Office action is accepted as having been unintentionally delayed.

There is no indication that the petition is signed by a registered patent attorney or patent agent of record. However, in accordance with 37 CFR 1.34, the signature appearing on the correspondence shall constitute a representation to the United States Patent and Trademark Office that he is authorized to represent the particular party in whose behalf he acts. If, practitioner desires to receive correspondence regarding this file, the appropriate power of attorney documents must be submitted. A courtesy copy of this decision is being mailed to practitioner, the petitioner herein. However, until otherwise instructed, all future correspondence regarding this

application file will be directed solely to the above-noted correspondence address of record.

This application is being forwarded to Technology Center 2600 for further processing.

Telephone inquiries concerning this matter may be directed to the undersigned at (571) 272-3205.

Alesia M. Brown
Petitions Attorney
Office of Petitions

CC: THOMAS MEANEY
Slater & Matsil, L.L.P.
17950 Preston Road
Suite 1000
Dallas, TX 75252

UNITED STATES PATENT AND TRADEMARK OFFICE

Commissioner for Patents
United States Patent and Trademark Office
P.O. Box 1450
Alexandria, VA 22313-1450
www.uspto.gov

TEXAS INSTRUMENTS INCORPORATED
P O BOX 655474, M/S 3999
DALLAS TX 75265

MAILED

APR 13 2010

OFFICE OF PETITIONS

In re Application of	:	
Eko N. Onggosanusi, et al.	:	
Application No. 10/687,303	:	DECISION ON PETITION
Filed: October 14, 2003	:	
Attorney Docket No. TI-35477	:	

This is a decision on the petition under the unintentional provisions of 37 CFR 1.137(b), filed January 15, 2010, to revive the above-identified application.

The petition is **GRANTED**.

The application became abandoned for failure to reply in a timely manner to the non-final Office action mailed, February 4, 2009 which set a shortened statutory period for reply of three (3) months. No extensions of time under the provisions of 37 CFR 1.136(a) were obtained. Accordingly, the application became abandoned on May 5, 2009. The Notice of Abandonment was mailed January 21, 2010.

The petition satisfies the requirements of 37 CFR 1.137(b) in that petitioner has supplied (1) the reply in the form of an amendment, (2) the petition fee of $1,620, and (3) a proper statement of unintentional delay.

Telephone inquiries concerning this decision should be directed to Terri Johnson at (571) 272-2991.

This application is being referred to Technology Center AU 2611 for appropriate action by the Examiner in the normal course of business on the reply received.

Terri Johnson
Petitions Examiner
Office of Petitions

UNITED STATES PATENT AND TRADEMARK OFFICE

Commissioner for Patents
United States Patent and Trademark Office
P.O. Box 1450
Alexandria, VA 22313-1450
www.uspto.gov

THE DOW CHEMICAL COMPANY
INTELLECTUAL PROPERTY SECTION
P.O. BOX 1967
MIDLAND MI 48641-1967

COPY MAILED

JAN 24 2008

OFFICE OF PETITIONS

In re Application of	:	
Robert Urscheler et al	:	
Application No. 10/687,324	:	DECISION GRANTING PETITION
Filed: October 16, 2003	:	UNDER 37 CFR 1.313(c)(2)
Attorney Docket No. 62733C	:	

This is a decision on the petition under 37 CFR 1.313(c)(2), filed January 23, 2008, to withdraw the above-identified application from issue after payment of the issue fee.

The petition is **GRANTED**.

The above-identified application is withdrawn from issue for consideration of a submission under 37 CFR 1.114 (request for continued examination). *See* 37 CFR 1.313(c)(2).

Petitioner is advised that the issue fee paid on December 3, 2007 cannot be refunded. If, however, this application is again allowed, petitioner may request that it be applied towards the issue fee required by the new Notice of Allowance.[1]

Telephone inquiries should be directed to the undersigned at (571) 272-3208.

This application is being referred to Technology Center AU 1792 for processing of the request for continued examination under 37 CFR 1.114 and for consideration of the concurrently filed IDS.

Karen Creasy

Karen Creasy
Petitions Examiner
Office of Petitions

[1] *The request to apply the issue fee to the new Notice may be satisfied by completing and returning the new Part B – Fee(s) Transmittal Form (along with any balance due at the time of submission). Petitioner is advised that the Issue Fee Transmittal Form must be completed and timely submitted to avoid abandonment of the application.*

UNITED STATES PATENT AND TRADEMARK OFFICE

UNITED STATES DEPARTMENT OF COMMERCE
United States Patent and Trademark Office
Address: COMMISSIONER FOR PATENTS
P.O. Box 1450
Alexandria, Virginia 22313-1450
www.uspto.gov

DORITY & MANNING, P.A.
POST OFFICE BOX 1449
GREENVILLE, SC 29602-1449

Mail Date: 04/21/2010

Applicant	: RameshBabu Boga	: DECISION ON REQUEST FOR
Patent Number	: 7582485	: RECALCULATION of PATENT
Issue Date	: 09/01/2009	: TERM ADJUSTMENT IN VIEW
Appliction No	: 10/687,327	: OF WYETH AND NOTICE OF INTENT TO
Filed	: 10/16/2003	: ISSUE CERTIFICATE OF CORRECTION
		:

The Request for Recalculation is **GRANTED** to the extent indicated.

The patent term adjustment has been determined to be **323** days. The USPTO will *sua sponte* issue a certificate of correction reflecting the amount of PTA days determined by the recalculation.

Prior to the issuance of the certificate of correction, the USPTO will afford patentee an opportunity to be heard and request reconsideration. Accordingly, patentee has **one month or thirty (30) days**, whichever is longer, to file a request for reconsideration of this patent term adjustment calculation. See 35 U.S.C. 154(b)(3)(B)(ii) and 37 CFR 1.322(a)(4). No extensions of time will be granted under 37 CFR 1.136.

Patentee should use document code PET.OP if electronically filing a request for reconsideration of this patent term adjustment calculation. The patentee must also include the information required by 37 CFR 1.705(b)(2) and the fee required by 37 CFR 1.18(e). If patentee does not file a timely request for reconsideration of this patent term adjustment calculation including the information required by 37 CFR 1.705(b)(2) and the fee required by 37 CFR 1.18(e), the USPTO will issue a certificate of correction reflecting the PTA determination noted above.

Patentee should be aware that in order to preserve the right to review in the United States District Court for the District of Columbia of the USPTO patent term adjustment determination, patentee must ensure that he or she also take the steps required under 35 U.S.C. 154(b)(4)(A) in a timely manner. Nothing in the request for recalculation should be construed as providing an alternative time frame for commencing a civil action under 35 U.S.C. 154(b)(4)(A).

Any questions concerning this decision should be directed to the Office of Patent Legal Administration at 571-272-7702.

SPE: T. Patel

SPE RESPONSE FOR CERTIFICATE OF CORRECTION

Paper No.: _____

DATE : 6/20/07

TO SPE OF : ART UNIT 2839

SUBJECT : Request for Certificate of Correction for Appl. No.: 10/687,329 Patent No.: 7186031

Please respond to this request for a certificate of correction within 7 days.

Please review the requested changes/corrections as shown in the **COCIN** document(s) in the IFW application image. No new matter should be introduced, nor should the scope or meaning of the claims be changed.

Please complete the response (see below) and forward the completed response to scanning using document code **COCX**.

Lamonte M. Newsome
Certificates of Correction Branch
703-308-9390 ext. 112

Thank You For Your Assistance

The request for issuing the above-identified correction(s) is hereby:
Note your decision on the appropriate box.

- [x] **Approved** — All changes apply.
- [ ] **Approved in Part** — Specify below which changes do not apply.
- [ ] **Denied** — State the reasons for denial below.

Comments: Corrections are acceptable.

TL, 6/25/07

TCPatel — SPE

2839 — Art Unit

UNITED STATES PATENT AND TRADEMARK OFFICE

COMMISSIONER FOR PATENTS
UNITED STATES PATENT AND TRADEMARK OFFICE
P.O. BOX 1450
ALEXANDRIA, VA 22313-1450
www.uspto.gov

MAILED

MAR 23 2004 hlw

DIRECTOR'S OFFICE
TECHNOLOGY CENTER 3600

JOHN V STEWART
1308 HENRY BALCH DRIVE
ORLANDO FL 32810

In re application of : **DECISION ON PETITION**
William Edward Windham : **TO MAKE SPECIAL**
Application No. 10/687,330 : **(ACCELERATED**
Filed: October 16, 2003 : **EXAMINATION)**
For: PORTABLE DRESSING BLIND AND METHOD OF USE

This is in response to the petition filed on December 1, 2003 to make the above-identified application special on the basis of special examining procedure for certain new applications - accelerated examination as set forth in MPEP § 708.02 VIII.

The requirements for granting special status under this section are: (A) a petition to make special accompanied by the fee set forth in 37 CFR 1.17(i); (B) all claims being directed to a single invention, or an election without traverse if the Office determines that all the claims are not directed to a single invention; (C) a statement that a pre-examination search was made listing the field of search; (D) one copy of each of the references deemed most closely related to the subject matter encompassed by the claims if said references are not already of record; and (E) a detailed discussion of how the claimed subject matter is patentable over the references in accordance with 37 CFR 1.111 (b) and (c).

The petition fails to adequately meet requirement (E) above. The petition does provide a general discussion of the cited references; however, the discussion does not make it clear how the claimed invention is patentable over the cited references in accordance with 37 CFR 1.111(b) and (c). Applicant is required to provide a more detailed discussion of how the claimed subject matter is patentable over each of the cited references.

For the above stated reason, the petition is **DISMISSED**.

Petitioner is given one more opportunity to perfect the petition. Any request for reconsideration must be filed within TWO MONTHS of the date of this decision. Extensions of time under 37 CFR 1.136(a) are permitted.

SUMMARY: Petition to Make Special **DISMISSED**.

Applicant should promptly submit a renewed petition to the Commissioner of Patents and Trademarks, Washington, D.C. 20231. The envelope should indicate that the correspondence be brought to the attention of Technology Center 3600.

Until the renewed petition is submitted, the application will be returned to the examiner's docket to await treatment on the merits in the normal order of examination.

Kenneth J. Dorner
Special Programs Examiner
Technology Center 3600
(703) 308-0866

KJD/mjz 3/8/04

UNITED STATES PATENT AND TRADEMARK OFFICE

COMMISSIONER FOR PATENTS
UNITED STATES PATENT AND TRADEMARK OFFICE
P.O. BOX 1450
ALEXANDRIA, VA 22313-1450
www.uspto.gov

MAILED

JUN 18 2004

DIRECTOR'S OFFICE
TECHNOLOGY CENTER 3600

John V Stewart
1308 Henry Balch Drive
Orlando, FL 32810

In re application of
William Edward Windham
Application No. 10/687,330
Filed: October 16, 2003
For: PORTABLE DRESSING BLIND AND METHOD OF USE

DECISION ON PETITION TO MAKE SPECIAL (ACCELERATED EXAMINATION)

This is in response to the renewed petition filed on April 12, 2004 to make the above-identified application special on the basis of special examining procedure for certain new applications - accelerated examination as set forth in MPEP § 708.02 VIII.

The requirements for granting special status under this section are: (A) a petition to make special accompanied by the fee set forth in 37 CFR 1.17(i); (B) all claims being directed to a single invention, or an election without traverse if the Office determines that all the claims are not directed to a single invention; (C) a statement that a pre-examination search was made listing the field of search; (D) one copy of each of the references deemed most closely related to the subject matter encompassed by the claims if said references are not already of record; and (E) a detailed discussion of how the claimed subject matter is patentable over the references in accordance with 37 CFR 1.111 (b) and (c).

Since all of the requirements for special status under MPEP § 708.02 VIII have been met, the petition is **GRANTED**.

The examiner is directed (1) to make an interference search for possible interfering applications, (2) to promptly examine this application out of turn, and (3) if any interfering application is discovered, to examine such application simultaneously and state in the first official letter of such application that it is being taken out of turn because of a possible interference.

Petitioner is advised that this application will continue to be special, throughout its entire prosecution and pendency, including interference or appeal, if any, only if petitioner makes a prompt ***bona fide*** effort, in response to each Office action, to place the application in condition for allowance, even if it is necessary to conduct an interview with the examiner to accomplish this purpose.

Steven N. Meyers
Special Programs Examiner
Technology Center 3600
(703) 308-3868

SNM/vdb: 6/15/04

UNITED STATES PATENT AND TRADEMARK OFFICE

COMMISSIONER FOR PATENTS
UNITED STATES PATENT AND TRADEMARK OFFICE
P.O. BOX 1450
ALEXANDRIA, VA 22313-1450
WWW.USPTO.GOV

Paper No. None

BAKER & DANIELS
111 E. WAYNE STREET
SUITE 800
FORT WAYNE IN 46802

COPY MAILED

FEB 0 3 2004

OFFICE OF PETITIONS

In re Application of
Daniel Wang, Robert Daly, and Steve Jaques
Application No. 10/687,335
Filed: October 16, 2003
Attorney Docket No. WAT0133
Title: BROAD BAND ANTENNA

DECISION ON PETITION
UNDER 37 C.F.R. §1.47(a)

This is in response to the petition under 37 C.F.R. §1.47(a)[1], filed October 16, 2003.

On October 16, 2003, the application was deposited, identifying Daniel Wang, Robert Daly, and Steve Jaques as joint inventors. The application was deposited without a fully executed oath or declaration[2]. The instant petition was submitted along with the filing of the application.

With the instant application, petitioner submitted a statement of facts executed by joint inventor Jaques, a copy of a letter which was mailed to the same, and a copy of a letter which was sent to the non-signing inventor.

The petition fee has been charged to Petitioner's Deposit Account, as authorized in the petition.

Petitioner has met requirements (1) – (3) and (5) above. As the instant petition was included on

---

1A grantable petition under 37 C.F.R. §1.47(a) requires:
(1) the petition fee of $130;
(2) a surcharge of either $65 or $130 if the petition is not filed at the time of filing the application, as set forth in 37 CFR § 1.16(e);
(3) a statement of the last known address of the non-signing inventors;
(4) either
a) proof that a copy of the entire application (specification, claims, drawings, and the oath or declaration) was sent or given to the non-signing inventor for review and proof that the non-signing inventor refuses to join in the application or
b) proof that the non-signing inventor cannot be found or reached after diligent effort;
(5) a declaration which complies with 37 CFR §1.63.

2 Joint inventor Wang did not execute the declaration.

filing, requirement (2) above is not applicable.

Regarding the fourth requirement above, Petitioner has not submitted adequate proof that diligent efforts have been made to locate the non-signing inventor. *As petitioner has set forth that the non-signing joint inventor cannot be found, Petitioner is required to establish that a diligent effort was made to locate the non-signing inventor.* The declarant sets forth that he sent two letters to the non-signing inventor's last known address, and that another entity attempted to telephone the non-signing inventor. However, Petitioner has not submitted adequate proof that diligent efforts have been made to locate the non-signing inventor. No mention is made as to any search done for the non-signing inventor. If attempts to obtain a forwarding address or to locate the non-signing inventor by other means such as through E-mail, telephone, or the Internet fail, then applicant will have provided the necessary proof required under 37 C.F.R. §1.47 that the inventor cannot be reached. Details of the efforts to locate the non-signing inventor should be set forth in an affidavit or declaration of facts by a person with first hand knowledge of the details.

Applicant should submit documentary evidence such as the results of an E-mail or Internet search. It is important that the statement contain facts as opposed to conclusions[3].

For this reason, the petition is **DISMISSED**.

Any request for reconsideration of this decision must be submitted within **TWO (2) MONTHS** from the mail date of this decision, and must contain evidence that a diligent search was conducted for the non-signing joint inventor. Extensions of time under 37 CFR §1.136(a) are permitted. The reconsideration request should include a cover letter entitled "Renewed Petition under 37 CFR §1.47(a)."

The reply to this letter may be submitted by mail[4], hand-delivery[5], or facsimile[6].

The application file will be retained in the Office of Petitions for two (2) months.

Telephone inquiries should be directed to the undersigned at (703) 305-0011.

Paul Shanoski
Attorney
Office of Petitions
United States Patent and Trademark Office

---

3 See MPEP 409.03(d).

4 Mail Stop Petition, Commissioner for Patents, United States Patent and Trademark Office, P.O. Box 1450, Alexandria, VA, 22313-1450.

5 Customer Window, Mail Stop Petition, Crystal Plaza Two, Lobby, Room 1B03, Arlington, Virginia 22202.

6 (703) 872-9306, attention Office of Petitions, Attorney Paul Shanoski.

UNITED STATES PATENT AND TRADEMARK OFFICE

Commissioner for Patents
United States Patent and Trademark Office
P.O. Box 1450
Alexandria, VA 22313-1450
www.uspto.gov

Marshall G. MacFarlane
YOUNG & BASILE, P.C.
Suite 624
3001 West Big Beaver Road
Troy MI 48084-3107

In re Application of:
Ransom, Robert M.
Serial No.: 10/687,341
Filed: Oct. 17, 2003
Title: COLLAPSIBLE LUGGAGE AREA PROTECTOR

DECISION ON RENEWED PETITION TO ACCEPT DUPLICATE PAPER UNDER 37 C.F.R. 1.181

This is a decision on the renewed petition filed on November 29, 2007. The petitioner requests withdrawal of the holding of abandonment pursuant to 37 CFR 1.181(a).

The petition is **GRANTED.**

The present application was held abandoned for failure to timely respond to the non-final Office action mailed on Mar. 13, 2007, which set a three-month shortened period for reply. Notice of abandonment was mailed on Nov. 14, 2007.

Petitioner asserts that a timely response to the non-final office action was mailed to the Office on Apr. 18, 2007. The petitioner has supplied a copy of a Response to Official Action indicating a mailing date of Apr. 18, 2007 (Exhibit A). The petitioner has also provided a Certificate of Mailing pursuant to 37 CFR 1.8, dated Apr. 18, 2007 (Exhibit B). Finally, the petitioner has provided a copy of USPTO acknowledgement receipt with a date stamp of Apr. 23, 2007.

As petitioner has provided convincing evidence that a timely reply to the non-final Office action of Mar. 13, 2007 was mailed to the Office on Apr. 18, 2007, there is no abandonment in fact. Any inconvenience or delay caused to applicant is regretted.

In view of the above, the Notice of Abandonment mailed Nov. 14, 2007 is in error and is hereby vacated. The holding of abandonment is withdrawn. This application is being forwarded to the examiner in Art Unit 3781 for appropriate action.

PETITION GRANTED

Karen M. Young

Karen M. Young, Director
Technology Center 3700

UNITED STATES PATENT AND TRADEMARK OFFICE

Commissioner for Patents
United States Patent and Trademark Office
P.O. Box 1450
Alexandria, VA 22313-1450
www.uspto.gov

SEYFARTH SHAW LLP
55 EAST MONROE STREET
SUITE 4200
CHICAGO, IL 60603-5803

COPY MAILED
NOV 21 2006
OFFICE OF PETITIONS

In re Patent No. 7,050,840 :
Issue Date: May 23, 2006 :
Application No. 10/687,365 : NOTICE
Filed: October 16, 2003 :
Attorney Docket No. 406500 :

This is a notice regarding your communication filed May 26, 2006, which is being treated as a request for acceptance of a fee deficiency submission under 37 CFR 1.28.

Your fee deficiency submission under 37 CFR 1.28 is hereby **ACCEPTED.**

This file is no longer entitled to small entity status. Accordingly, all future fees paid in this file must be paid at the large entity rate, absent further notification from a proper party of a change in status. *See* 37 CFR 1.27(c)(2).

The $300 publication fee was previously paid on March 27, 2006. Accordingly, the duplicate $300 publication fee assessed to petitioner's deposit account on May 30, 2006 will be refunded in due course.

Inquiries related to this communication should be directed to the undersigned at (571) 272-3218.

Frances Hicks
Petitions Examiner
Office of Petitions

UNITED STATES PATENT AND TRADEMARK OFFICE

Commissioner for Patents
United States Patent and Trademark Office
P.O. Box 1450
Alexandria, VA 22313-1450
www.uspto.gov

MAILED

NOV 18 2004

DIRECTOR'S OFFICE
TECHNOLOGY CENTER 3600

Randall J. Knuth PC
3510-A Stellhorn Road
Fort Wayne, IN 46815-4631

In re application of :
Richard D. Goshert :
Application No. 10/687,375 :
Filed: October 15, 2003 :
For: SYSTEM AND METHOD TO EVALUATE CROP INSURANCE PLANS

DECISION ON PETITION TO MAKE SPECIAL (INFRINGEMENT)

This is a decision on the petition under 37 C.F.R § 1.102(d) filed January 6, 2004 to make the above-identified application special.

The petition requests that the above-identified application be made special under the procedure set forth in M.P.E.P. § 708.02, item II: Infringement.

MPEP 708.02 states that a Petition to Make Special based on Infringement must have the following: (1) the appropriate petition fee under 37 CFR 1.17(i); (2) a statement by the assignee, applicant, or attorney alleging: (A) that there is an infringing device or product actually on the market or method in use; (B) that a rigid comparison of the alleged infringing device, product or method with the claims of the application has been made, and that, in his or her opinion, some of the claims are unquestionably infringed; and (C) that he or she has made a careful and thorough search of the prior art, or has good knowledge of the prior art, and has sent a copy of the references deemed most closely related to the subject matter encompassed by the claims.

The petition filed January 6, 2004 meets all of the requirements above and, therefore, the petition is **GRANTED**.

With regards to element 2(C) above, an Information Disclosure Statement was filed.

The examiner is directed (1) to make an interference search for possible interfering applications; (2) to promptly examine this application out of turn; and (3) if any interfering application is discovered, to examine such application simultaneously and state in the first official letter of such application that it is being taken out of turn because of a possible interference.

Petitioner is advised that this application will continue to be special, throughout its entire prosecution and pendency, including interference and appeal, if any, only if petitioner makes a prompt *bona fide* effort, in response to each Office action, to place the application in condition for allowance, even if it is necessary to conduct an interview with the examiner to accomplish this purpose.

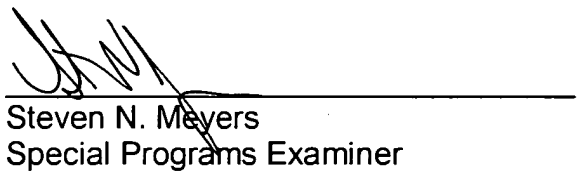

Steven N. Meyers
Special Programs Examiner
Technology Center 3600
(703) 308-3868

SNM/snm: 11/16/04

UNITED STATES PATENT AND TRADEMARK OFFICE

Commissioner for Patents
United States Patent and Trademark Office
P.O. Box 1450
Alexandria, VA 22313-1450
www.uspto.gov

SLATER & MATSIL
17950 PRESTON ROAD
SUITE 1000
DALLAS, TX 75252

COPY MAILED

APR 0 6 2005

OFFICE OF PETITIONS

In re Application of :
Chih-Hsin Ko et al :
Application No. 10/687,377 : ON PETITION
Filed: October 16, 2003 :
Attorney Docket No. TSM03-0275 :

This is a decision on the petition, filed March 14, 2005, to correct the incorrectly spelled name of one of the named inventors.

The petition is **DISMISSED** as moot.

The declaration submitted with the original application listed the third-named inventor as "Chung-Hu Ge." The instant petition states that the name should have been "Chung-Hu Ke." Since the petition involves a name correction, rather than a name change. Therefore, the petition is dismissed as involving a moot issue.[1] A copy of the corrected filing receipt is enclosed.

No fee is required and none has been charged.

Telephone inquiries related to this decision should be directed to Wan Laymon at (571) 272-3220.

This matter is being referred to Publishing Division.

Wan Laymon
Petitions Examiner
Office of Petitions
Office of the Deputy Commissioner
for Patent Examination Policy

Enclosure: Corrected Filing Receipt

[1] MPEP 605.04

UNITED STATES PATENT AND TRADEMARK OFFICE

Commissioner for Patents
United States Patent and Trademark Office
P.O. Box 1450
Alexandria, VA 22313-1450
www.uspto.gov

HEWLETT PACKARD COMPANY
P.O. Box 272400, 3404 E. Harmony Road
Intellectual Property Administration
Fort Collins, CO 90527-2400

AUG 17 2005

In re Application of:
Roy Zeighami et al.
Serial No.: 10/687,382
Filed: October 16, 2003
Attorney Docket No.: 10014777-3

DECISION ON PETITION TO WITHDRAW THE HOLDING OF ABANDONMENT

This is a decision on the petition to withdraw the holding of abandonment under 37 C.F.R. § 1.181 filed via facsimile transmission on June 29, 2005. There is no fee for this petition.

The petition is **GRANTED**.

A Notice of Abandonment was mailed on April 13, 2005. The Notice of Abandonment stated that the application was abandoned for failure to timely file a proper reply to the Office action mailed on April 26, 2004. However, it is apparent that there was no abandonment in fact. A review of the application file reveals that a timely and proper reply to the Office action was filed on July 26, 2004.

Accordingly, the Notice of Abandonment mailed April 13, 2005 is **VACATED** and the holding of abandonment is withdrawn.

The examiner will consider the response filed on July 26, 2004 and prepare an Office action based upon that response. Any inconvenience due to the inadvertent abandonment of the application is greatly regretted.

Any inquiries regarding this decision should be directed to Edward Westin at (571) 272-1638.

Richard K. Seidel, Director
Technology Center 2800
Semiconductors, Electrical and Optical
Systems and Components

UNITED STATES PATENT AND TRADEMARK OFFICE

Commissioner for Patents
United States Patent and Trademark Office
P.O. Box 1450
Alexandria, VA 22313-1450
www.uspto.gov

RADER, FISHMAN & GRAUER PLLC
39533 Woodward Avenue
Suite 140
Bloomfield Hills, Michigan 48304

COPY MAILED

APR 0 4 2006

OFFICE OF PETITIONS

In re Application of
Brian MCCARRICK
Application No. 10/687,387
Filed: October 16, 2003
Attorney Docket No. 66209-0001

ON PETITION

This is a decision on the petition under 37 CFR 1.137(b), filed December 19, 2005, to revive the above-identified application.

The petition is **GRANTED**.

The application became abandoned for failure to reply within the meaning of 37 CFR 1.113 in a timely manner to the final Office action mailed May 3, 2005, which set a shortened statutory period for reply of three (3) months. No extensions of time under the provisions of 37 CFR 1.136(a) were obtained. Accordingly, by operation of law, the above-identified application became abandoned on August 4, 2005.

The petition satisfies the requirements of 37 CFR 1.137(b) in that petitioner has supplied (1) the reply in the form of a Request for Continued Examination (RCE) under 37 CFR 1.114, an amendment filed concurrently therewith, and the $395 filing fee; (2) the petition fee of $750; and (3) an adequate statement of unintentional delay. Accordingly, the reply to the final Office Action of May 3, 2005 is accepted as having been unintentionally delayed.

The petition filed December 19, 2005 is accompanied by a Request for Waiver of Fees for Petition to Revive. With respect to the Request, it is regrettable that Applicant did not receive the Advisory Action until after the above-identified application became abandoned. While the Office attempts to promptly respond to an amendment after final, there are those instances where delays do occur, as in the instant application. However, it is clear from 37 CFR 1.116 that abandonment of an application is risked when an amendment after a final Office action is filed. The rule clearly indicates that the mere filing of an amendment does not relieve the petitioner of the duty of taking appropriate action to save the application from abandonment. Therefore, whether the petitioner received an Advisory Action or not prior to the expiration of the six month statutory period, the only right the petitioner was entitled to was that of appealing the final rejection or filing a continuing application. This application became abandoned for failure on the part of the petitioner to file an appeal or a continuing application. Petitioner has not stated what steps were taken to maintain pendency of the application after the filing of the response received on August 3, 2005 in view of the terms set out in 37 CFR 1.116. When the petitioner did not receive a response before the expiration of the six month statutory period, the appropriate action would have been

to (1) inquire as to the status of the application, or (2) file a Notice of Appeal (or a continuing application) to maintain pendency of the application. Moreover, the payment of a petition fee to obtain the revival of an abandoned application is a statutory prerequisite to revival of the abandoned application in view of 35 U.S.C. 41(a)(7). The Office may waive rules in certain instances; however, the Office cannot waive statutes. Therefore, the petition fee cannot be waived.

This application is being revived for consideration of the RCE.

Telephone inquiries concerning this decision should be directed to Charles A. Marmor, II at (571) 272-6052 or in his absence, the undersigned at (571) 272-7099.

The application file is being referred to Technology Center AU 3677.

David Bucci
Petitions Examiner
Office of Petitions

UNITED STATES PATENT AND TRADEMARK OFFICE

Commissioner for Patents
United States Patent and Trademark Office
P.O. Box 1450
Alexandria, VA 22313-1450
www.uspto.gov

William Reeves
c/o MedDataNet, LLC
PO Box 23
North Branford CT 06471

COPY MAILED

JUL 07 2004

OFFICE OF PETITIONS

In re Application of :
William Reeves :
Application No. 10/687,409 :
Filed: October 14, 2003 :
For: BODILY WORN DEVICE FOR DIGITAL STORAGE AND RETRIEVAL OF EMERGENCY MEDICAL RECORDS AND PERSONAL IDENTIFICATION :

ON PETITION

Corrected Decision:

This is a corrected decision on the petition filed January 30, 2004, to accord the above-identified application a filing date of October 14, 2003.

The petition is **granted**.

The prior decision, due to a typographical error, granted a filing date of October **24**, 2003, to the application rather than October **14**, 2003. This decision in intended to correct the record and to instruct the Office of Initial Patent Examination to give the application a filing date of October 14, 2003.

The Application is being returned to the Office of Initial Patent Examination for further processing with a filing date of October 14, 2003, using the application papers filed on October 14, 2003, and the corrected drawings filed on April 7, 2004.

Telephone inquiries should be directed to Petitions Attorney Steven Brantley at (703) 306-5683.

Charles Steven Brantley
Senior Petitions Attorney
Office of Petitions

UNITED STATES PATENT AND TRADEMARK OFFICE

Commissioner for Patents
United States Patent and Trademark Office
P.O. Box 1450
Alexandria, VA 22313-1450
www.uspto.gov

FULBRIGHT & JAWORSKI L.L.P
2200 ROSS AVENUE
SUITE 2800
DALLAS TX 75201-2784

MAILED

MAY 24 2010

OFFICE OF PETITIONS

In re Application of
Robert E. Cavanaugh
Application No. 10/687,413
Filed: October 16, 2003
Attorney Docket No.
58895/P004US/10306553

DECISION ON PETITION
TO WITHDRAW
FROM RECORD

This is a decision on the request to withdraw as attorney of record under 37 CFR § 1.36, filed March 19, 2010.

The request is **NOT APPROVED**.

The request cannot be approved because it lacks a forwarding correspondence address of the first named inventor or a properly intervening assignee.

If the forwarding correspondence address is to the assignee, the Office will only accept correspondence address changes to the most current address information provided for the assignee of the entire interest *that properly became of record under 37 CFR 3.71.* 37 CFR 3.71(c) states:

> *An assignee becomes of record either in a national patent application or a reexamination proceeding by filing a statement in compliance with § 3.73(b) that is signed by a party who is authorized to act on behalf of the assignee.*

The assignee must establish its ownership of the patent to the satisfaction of the Director. In this regard, the statement under 37 CFR 3.73(b) must have either: (i) documentary evidence of a chain of title from the original owner to the assignee (*e.g.*, copy of an executed assignment), and a statement affirming that the documentary evidence of the chain of title from the original owner to the assignee was or concurrently is being submitted for recordation pursuant to § 3.11; or (ii) a statement specifying where documentary evidence of a chain of title from the original owner to the assignee is recorded in the assignment records of the Office (*e.g.*, reel and frame number).

All future communications from the Office will continue to be directed to the above-listed address until otherwise notified by applicant.

Telephone inquires concerning this decision should be directed to the undersigned at (571) 272-2991.

Terri Johnson
Petitions Examiner
Office of Petitions

cc: **DEEP NINES, INC.**
14643 DALLAS PARKWAY
SUITE 150
DALLAS, TX 75254

UNITED STATES PATENT AND TRADEMARK OFFICE

COMMISSIONER FOR PATENTS
UNITED STATES PATENT AND TRADEMARK OFFICE
P.O. BOX 1450
ALEXANDRIA, VA 22313-1450
www.uspto.gov

COPY MAILED

DEC 12 2007

OFFICE OF PETITIONS

BLAKELY SOKOLOFF TAYLOR & ZAFMAN
1279 OAKMEAD PARKWAY
SUNNYVALE, CA 94085-4040

In re Application of
Joseph A. Bennett
Application No. 10/687,430
Filed: October 16, 2003
Attorney Docket No. 042390.P9338C

ON PETITION

This is a decision on the petition under 37 CFR 1.137(b) to revive the above-identified application, filed March 13, 2006.

The petition is **GRANTED**.

The application became abandoned for failure to pay the issue fee on or before July 5, 2005. A Notice of Abandonment was mailed on September 29, 2005. On March 13, 2006, the present petition was filed.

The petition satisfies the requirements of 37 CFR 1.137(b) in that petitioner has supplied (1) the reply in the form of the $1,400 issue fee and the $300 publication fee; (2) the petition fee of $1,500; and (3) an adequate statement of unintentional delay[1].

The application is being referred to the Office of Publications to be processed into a patent.

Telephone inquires related to this decision should be directed to the undersigned at (571) 272-3204. Telephone inquiries related to processing at Publishing Division should be directed to (571) 272-4200.

Sherry D. Brinkley
Petitions Examiner
Office of Petitions

[1] 37 CFR 1.137(b)(3) requires a statement that the entire delay in filing the required reply from the due date for the reply until the filing of a grantable petition pursuant to 37 CFR 1.137(b) was unintentional. Although the statement contained in the petition varies from the language required by 37 CFR 1.137(b)(3), the statement will be construed as the statement required by 37 CFR 1.137(b)(3). Petitioner must notify the Office if this is **not** a correct interpretation of the statement contained in the instant petition.

UNITED STATES PATENT AND TRADEMARK OFFICE

Commissioner for Patents
United States Patent and Trademark Office
P.O. Box 1450
Alexandria, VA 22313-1450
www.uspto.gov

REENA KUYPER, ESQ.
BYARD NILSSON, ESQ.
9229 SUNSET BOULEVARD
SUITE 630
LOS ANGELES CA 90069

MAILED

JUN 09 2010

OFFICE OF PETITIONS

In re Application of :
Katz :
Application No. 10/687,446 : DECISION ON PETITION
Filed: 10/16/2003 :
Attorney Docket No. 6046-101N7 :

This is a decision on the petition under 37 CFR 1.137(b), filed January 22, 2010, to revive the above-identified application.

The petition is **GRANTED**.

The application became abandoned for failure to timely and proper reply within the meaning of 37 CFR 1.113 to the final Office action, mailed July 14, 2008, which set a shortened statutory period for reply of three (3) months. No extensions of time under the provisions of 37 CFR 1.136(a) were obtained. Accordingly, the application became abandoned on October 15, 2008. A Notice of Abandonment was mailed on January 22, 2009.

The petition satisfies the requirements of 37 CFR 1.137(b) in that applicant has supplied (1) the reply in the form of a RCE, the RCE fee, and the submission required by 37 CFR 1.114; (2) the petition fee; and (3) a proper statement of unintentional delay.

Telephone inquiries concerning this decision should be directed to the undersigned at (571) 272-3211.

This application is being referred to Technology Center AU 2614 for processing of the RCE and for appropriate action by the Examiner on the amendment submitted in accordance with 37 CFR 1.114.

Christina Tartera Donnell

Christina Tartera Donnell
Senior Petitions Attorney
Office of Petitions

UNITED STATES PATENT AND TRADEMARK OFFICE

UNITED STATES DEPARTMENT OF COMMERCE
United States Patent and Trademark Office
Address: COMMISSIONER FOR PATENTS
P.O. Box 1450
Alexandria, Virginia 22313-1450
www.uspto.gov

PERKINS COIE LLP
PATENT-SEA
P.O. BOX 1247
SEATTLE, WA 98111-1247

Mail Date: 04/20/2010

Applicant	: David J. Kubista	: DECISION ON REQUEST FOR
Patent Number	: 7647886	: RECALCULATION of PATENT
Issue Date	: 01/19/2010	: TERM ADJUSTMENT IN VIEW
Appliction No	: 10/687,458	: OF WYETH AND NOTICE OF INTENT TO
Filed	: 10/15/2003	: ISSUE CERTIFICATE OF CORRECTION
		:

The Request for Recalculation is **GRANTED** to the extent indicated.

The patent term adjustment has been determined to be **1359** days. The USPTO will *sua sponte* issue a certificate of correction reflecting the amount of PTA days determined by the recalculation.

Prior to the issuance of the certificate of correction, the USPTO will afford patentee an opportunity to be heard and request reconsideration. Accordingly, patentee has **one month or thirty (30) days**, whichever is longer, to file a request for reconsideration of this patent term adjustment calculation. See 35 U.S.C. 154(b)(3)(B)(ii) and 37 CFR 1.322(a)(4). No extensions of time will be granted under 37 CFR 1.136.

Patentee should use document code PET.OP if electronically filing a request for reconsideration of this patent term adjustment calculation. The patentee must also include the information required by 37 CFR 1.705(b)(2) and the fee required by 37 CFR 1.18(e). If patentee does not file a timely request for reconsideration of this patent term adjustment calculation including the information required by 37 CFR 1.705(b)(2) and the fee required by 37 CFR 1.18(e), the USPTO will issue a certificate of correction reflecting the PTA determination noted above.

Patentee should be aware that in order to preserve the right to review in the United States District Court for the District of Columbia of the USPTO patent term adjustment determination, patentee must ensure that he or she also take the steps required under 35 U.S.C. 154(b)(4)(A) in a timely manner. Nothing in the request for recalculation should be construed as providing an alternative time frame for commencing a civil action under 35 U.S.C. 154(b)(4)(A).

Any questions concerning this decision should be directed to the Office of Patent Legal Administration at 571-272-7702.

UNITED STATES PATENT AND TRADEMARK OFFICE

Commissioner for Patents
United States Patent and Trademark Office
P.O. Box 1450
Alexandria, VA 22313-1450
www.uspto.gov

BANNER & WITCOFF, LTD.
TEN SOUTH WACKER DRIVE
SUITE 3000
CHICAGO IL 60606

COPY MAILED

MAY 2 4 2004

OFFICE OF PETITIONS

In re Application of
Wang, et al.
Application No. 10/687,471
Filed: October 15, 2003
Attorney Docket No. 06401.00417
For: COLD-WATER SOLUBLE EXTRUDED STARCH PRODUCT

DECISION GRANTING PETITION

This is a decision on the petition under 37 CFR 1.181, filed March 19, 2004, requesting in effect, withdrawal of the Notice of Incomplete Nonprovisional Application, mailed January 26, 2004 and accordation of an October 15, 2003 filing date to the above-identified application. The petition will be treated under 37 CFR 1.53(e).

The application was deposited on October 15, 2003. On January 26, 2004, the Office of Initial Patent Examination mailed a Notice informing petitioners that no filing date had been accorded to the application papers deposited on October 15, 2003 because no drawing was present, as is required by 35 USC 113. In response to the Notice, petitioners timely filed, *inter alia*, the present petition.

It is noted that the above-identified application contains a process claim. As stated in MPEP 601.01(f), it is the practice of the PTO to treat an application that contains at least one process or method claim as an application for which a drawing is not necessary for an understanding of the invention under 35 USC 113 (first sentence.)

MPEP 601.01(f) also states that:

> A nonprovisional application having at least one claim, or a provisional application having at least some disclosure, directed to the subject matter discussed above for which a drawing is usually not considered essential for a filing date, describing drawing figures in the specification, but filed without drawings will be treated as an application filed without all of the drawing figures referred to in the specification as discussed in MPEP 601.01(g), so long as the application contains something that can be construed as a written description.

This application contains a process claim. Therefore, the above-identified application should have been treated as an application filed without all of the drawing figures referred to in the specification as discussed in MPEP 601.01(g).

MPEP 601.01(g) states that if an application is filed without all of the drawing figures referred to in the specification, a "Notice of Omitted Items" is mailed indicating that the application has been accorded a filing date.

In view of the above, the "Notice" mailed January 26, 2004 was mailed in error and is hereby withdrawn. The petition is **granted**. Pursuant to petitioners' authorization, deposit account no. 19-0733 will be credited the $130.00 petition fee.

The application is being returned to the Office of Initial Patent Examination for further processing with a filing date of **October 15, 2003**. It is noted that the instant application is a divisional application of application no. 09/863,928 and the entire contents of the prior application was incorporated by reference in the instant application upon initial filing. Therefore, after additional processing, the application will be forwarded to Technology Center 1700 where the examiner of record will consider the preliminary amendment and the drawings, filed March 19, 2004, for new matter.

Telephone inquiries specific to this matter should be directed to the undersigned at (703) 308-6712.

E. Shirene Willis
Senior Petitions Attorney
Office of Petitions
Office of the Deputy Commissioner
for Patent Examination Policy

UNITED STATES PATENT AND TRADEMARK OFFICE

Commissioner for Patents
United States Patent and Trademark Office
P.O. Box 1450
Alexandria, VA 22313-1450
www.uspto.gov

MARTIN & ASSOCIATES, LLC
P.O. BOX 548
CARTHAGE MO 64836-0548

MAILED

MAR 2 4 2009

OFFICE OF PETITIONS

In re Application of :
Bates et al. :
Application No. 10/687,473 : ON PETITION
Filed: October 16, 2003 :
Attorney Docket No. ROC920030287US1 :

This is a decision on the petition under 37 C.F.R. § 1.137(b), filed December 11, 2008, to revive the above-identified application.

The petition is **GRANTED**.

The petition satisfies the requirements of 37 CFR 1.137(b) in that petitioner has supplied (1) the reply in the form of an Amendment, (2) the petition fee, and (3) a proper statement of unintentional delay.

Telephone inquiries concerning this decision should be directed to the undersigned at (571) 272-3206.

This matter is being referred to Technology Center AU 2176 for further examination on the merits.

Liana Walsh
Petitions Examiner
Office of Petitions

UNITED STATES PATENT AND TRADEMARK OFFICE

UNITED STATES DEPARTMENT OF COMMERCE
United States Patent and Trademark Office
Address: COMMISSIONER FOR PATENTS
P.O. Box 1450
Alexandria, Virginia 22313-1450
www.uspto.gov

APPL NO.	FILING OR 371 (c) DATE	ART UNIT	FIL FEE REC'D	ATTY.DOCKET NO	DRAWINGS	TOT CLMS	IND CLMS
10/687,474	10/14/2003	3713	900	PD-203019	15	14	2

CONFIRMATION NO. 8877

UPDATED FILING RECEIPT

OC000000013073303

020991
THE DIRECTV GROUP INC
PATENT DOCKET ADMINISTRATION RE/R11/A109
P O BOX 956
EL SEGUNDO, CA 90245-0956

Date Mailed: 06/29/2004

Receipt is acknowledged of this regular Patent Application. It will be considered in its order and you will be notified as to the results of the examination. Be sure to provide the U.S. APPLICATION NUMBER, FILING DATE, NAME OF APPLICANT, and TITLE OF INVENTION when inquiring about this application. Fees transmitted by check or draft are subject to collection. Please verify the accuracy of the data presented on this receipt. **If an error is noted on this Filing Receipt, please write to the Office of Initial Patent Examination's Filing Receipt Corrections, facsimile number 703-746-9195. Please provide a copy of this Filing Receipt with the changes noted thereon. If you received a "Notice to File Missing Parts" for this application, please submit any corrections to this Filing Receipt with your reply to the Notice. When the USPTO processes the reply to the Notice, the USPTO will generate another Filing Receipt incorporating the requested corrections (if appropriate).**

Applicant(s)

Shahla C. Cisneros, Ft. Lauderdale, FL;
Peter Klimczak, Sunrise, FL;
Steven M. Soloff, Tamarac, FL;
Jesus F. Mata, Boca Raton, FL;

Domestic Priority data as claimed by applicant

This appln claims benefit of 60/451,141 03/01/2003

Foreign Applications

If Required, Foreign Filing License Granted: 01/12/2004

Projected Publication Date: 10/07/2004

Non-Publication Request: No

Early Publication Request: No

Title

Television interactive gaming

Preliminary Class

463

LICENSE FOR FOREIGN FILING UNDER
Title 35, United States Code, Section 184
Title 37, Code of Federal Regulations, 5.11 & 5.15

GRANTED

The applicant has been granted a license under 35 U.S.C. 184, if the phrase "IF REQUIRED, FOREIGN FILING LICENSE GRANTED" followed by a date appears on this form. Such licenses are issued in all applications where the conditions for issuance of a license have been met, regardless of whether or not a license may be required as set forth in 37 CFR 5.15. The scope and limitations of this license are set forth in 37 CFR 5.15(a) unless an earlier license has been issued under 37 CFR 5.15(b). The license is subject to revocation upon written notification. The date indicated is the effective date of the license, unless an earlier license of similar scope has been granted under 37 CFR 5.13 or 5.14.

This license is to be retained by the licensee and may be used at any time on or after the effective date thereof unless it is revoked. This license is automatically transferred to any related applications(s) filed under 37 CFR 1.53(d). This license is not retroactive.

The grant of a license does not in any way lessen the responsibility of a licensee for the security of the subject matter as imposed by any Government contract or the provisions of existing laws relating to espionage and the national security or the export of technical data. Licensees should apprise themselves of current regulations especially with respect to certain countries, of other agencies, particularly the Office of Defense Trade Controls, Department of State (with respect to Arms, Munitions and Implements of War (22 CFR 121-128)); the Office of Export Administration, Department of Commerce (15 CFR 370.10 (j)); the Office of Foreign Assets Control, Department of Treasury (31 CFR Parts 500+) and the Department of Energy.

NOT GRANTED

No license under 35 U.S.C. 184 has been granted at this time, if the phrase "IF REQUIRED, FOREIGN FILING LICENSE GRANTED" DOES NOT appear on this form. Applicant may still petition for a license under 37 CFR 5.12, if a license is desired before the expiration of 6 months from the filing date of the application. If 6 months has lapsed from the filing date of this application and the licensee has not received any indication of a secrecy order under 35 U.S.C. 181, the licensee may foreign file the application pursuant to 37 CFR 5.15(b).

UNITED STATES PATENT AND TRADEMARK OFFICE

Commissioner for Patents
United States Patent and Trademark Office
P.O. Box 1450
Alexandria, VA 22313-1450
www.uspto.gov

BANNER & WITCOFF, LTD.
TEN SOUTH WACKER DRIVE
SUITE 3000
CHICAGO IL 60606

COPY MAILED

DEC 0 5 2008

OFFICE OF PETITIONS

In re Application of :
Lin Wang et al. :
Application No. 10/687,498 : DECISION ON PETITION
Filed: March 25, 2004 :
Attorney Docket No. 006401.00418 :

This is a decision on:

(1) the petition under 37 CFR 1.183 requesting a waiver to permit a refund of the Time Extension Fees paid February 25, 2008 and

(2) the petition under 37 CFR 1.181, which has been properly considered as a petition under 37 C.F.R. 1.181(a) asking the Director to exercise his supervisory authority to refund the Time Extension Fees paid February 25, 2008.

These petitions were filed concurrently on February 25, 2008.

The petition under 37 CFR 1.183 is **dismissed** and the petition under 37 CFR 1.181 is **granted**.

A Notice of Appeal (Notice) and Pre-Appeal Brief Request for Review (Request) were filed July 23, 2007. 37 CFR 41.37 required the filing of an appeal brief (accompanied by the fee required by 37 CFR 41.20(b)(2)) within two-months of the filing date of the Notice. An extension of time pursuant to the provisions of 37 CFR 1.136(a) was available. An appeal brief (and fee) was filed in accordance with 37 CFR 41.37 on February 25, 2008 with a five month extension of time under 37 CFR 1.136(a). The Request was not decided. Petitioner now requests a refund of the five month extension of time fee paid February 25, 2008 since the Request was not decided before the expiration of the period in which to file an appeal brief under 37 CFR 41.37. Petitioner contends that such a decision might have determined that the application was in condition for allowance and the filing of an appeal brief was unnecessary or that an extension of time would not have been payable upon filing the appeal brief.

37 CFR 1.183 allows for the waiver of a regulation that is not a requirement of the statutes when there is an extraordinary circumstance in which justice requires such a waiver. The petition does not clearly identify a regulation for the Director to waive, but the waiver of an extension of time

under 37 CFR 1.136 and the associated fees is discussed. Regardless of the regulation to be waived, the Official Gazettte Notice (Notice) of July 12, 2005 establishing the Pre-Appeal Brief Conference Pilot Program (Program) indicated that any existing USPTO rule that is inconsistent with the Program is waived. However, the waiver of a rule will not achieve the relief requested by petitioner since the requested refund is not prevented by a rule. The present circumstances are appropriately addressed under the Director's supervisory authority pursuant to 37 CFR 1.181.

In this regard, the July 12, 2005 Notice established that when a request for pre-appeal brief review is filed with the notice of appeal, such as the July 23, 2007 Request, the period of time for filing the appeal brief will be the later of the two-month period set in 37 CFR 41.37(a) or one month from the mail date of the decision on the request. Since a decision had not yet been rendered on the July 23, 2007 Request, a period for filing the appeal brief was not set. Accordingly, applicants were not required to file the appeal brief when they did or pay an extension of time fee. The extension of time fee was paid by mistake and will be credited to deposit account 19-0733 as requested.

Any questions concerning this decision may be directed to Christopher Bottorff at (571) 272-6692.

David Bucci
Petitions Examiner
Office of Petitions

UNITED STATES PATENT AND TRADEMARK OFFICE

COMMISSIONER FOR PATENTS
UNITED STATES PATENT AND TRADEMARK OFFICE
P.O. BOX 1450
ALEXANDRIA, VA 22313-1450
www.uspto.gov

PHILIP S. JOHNSON
JOHNSON & JOHNSON
ONE JOHNSON & JOHNSON PLAZA
NEW BRUNSWICK NJ 08933-7003

COPY MAILED
FEB 02 2006
OFFICE OF PETITIONS

In re Application of :
Doll, et al. : DECISION ON PETITION
Application No. 10/687,503 :
Filed: October 15, 2003 :
Docket No.: END-887CIP :

This is a decision on the petition under 37 C.F.R. § 1.137(b), filed January 18, 2006, to revive the above-identified application.

The petition is **GRANTED**.

This application became abandoned May 21, 2005 for failure to timely file a proper reply to the Notice mailed April 20, 2005. The Notice set a one shortened statutory period of time for reply. No petition for extension of time in accordance with 37 C.F.R. § 1.136 was timely submitted. Notice of Abandonment was mailed October 31, 2005

A grantable petition pursuant to 37 C.F.R. § 1.137(b) must be accompanied by: (1) the required reply to the outstanding Office action or notice, unless previously filed; (2) the petition fee as set forth in 37 C.F.R. § 1.17(m); (3) a statement that the entire delay in filing the required reply from the due date for the reply until the filing of a grantable petition pursuant to 37 C.F.R. § 1.137(b) was unintentional; and (4) any terminal disclaimer (and fee set forth in 37 C.F.R. § 1.20(d)) required pursuant to 37 C.F.R. § 1.137(c).

The instant petition has been reviewed and found in compliance with the provisions of 37 C.F.R. § 1.137(b). Accordingly, the failure to timely submit a proper reply to the non-final Office action is accepted as having been unintentionally delayed.

It is noted that a request for continued examination fee of $790.00 was submitted herewith. As the request for RCE was prematurely submitted, i.e., application not subject to final rejection, petitioners are entitled to a refund of this fee and

may request such by writing to the Finance Office, Refund Branch. A copy of this decision should accompany any request for refund.

This application will be forwarded to Technology Center 3700 for further processing.

Telephone inquiries concerning this matter may be directed to the undersigned at (571) 272-3205.

Alesia M. Brown
Petitions Attorney
Office of Petitions

United States
Patent And
Trademark Office

P.O. Box 1450, Alexandria, Virginia 22313-1450 – www.uspto.gov

PETITION DECISION

02/27/04

Steven G Saunders
Bromberg & Sunstein LLP
125 Summer Street
Boston, MA 02110-1618

Dear Applicant:

The Box PGPub replacement drawings for application number 10/687515 received on 01/06/04 by the U. S. Patent and Trademark Office will be included for patent publication.

Telephone inquiries should be directed to Kaletus King, Office of Pre-Grant Publication 703 605-4283.

Kaletus King

Signature of Reviewer, Office of Pre-Grant Publication

SPE RESPONSE FOR CERTIFICATE OF CORRECTION

Paper No.: _____

DATE : 4/21/08

TO SPE OF : ART UNIT 3763 Kobarski, Christopher

SUBJECT : Request for Certificate of Correction for Appl. No.: 10/687515 Patent No.: 7357792

Please respond to this request for a certificate of correction within 7 days.

FOR IFW FILES:

Please review the requested changes/corrections as shown in the **COCIN** document(s) in the IFW application image. No new matter should be introduced, nor should the scope or meaning of the claims be changed.

Please complete the response (see below) and forward the completed response to scanning using document code **COCX**.

FOR PAPER FILES:

Please review the requested changes/corrections as shown in the attached certificate of correction. Please complete this form (see below) and forward it with the file to:

Certificates of Correction Branch (CofC)
South Tower - 9A22
Palm Location 7580

_____
Certificates of Correction Branch
703-308-9390 ext. _____

Thank You For Your Assistance

The request for issuing the above-identified correction(s) is hereby:
Note your decision on the appropriate box.

- ☒ **Approved** — **All** changes apply.
- ☐ **Approved in Part** — Specify below which changes **do not** apply.
- ☐ **Denied** — State the reasons for denial below.

Comments: 1-7 Replacement Sheet drawings

_____

_____

_____

_____

_____ 3763
SPE **Art Unit**

UNITED STATES PATENT AND TRADEMARK OFFICE

Commissioner for Patents
United States Patent and Trademark Office
P.O. Box 1450
Alexandria, VA 22313-1450
www.uspto.gov

FOLEY & LARDNER LLP
1530 PAGE MILL ROAD
PALO ALTO, CA 94304

COPY MAILED

JUN 19 2006

OFFICE OF PETITIONS

In re Application of :
Christopher H. Porter :
Application No. 10/687,518 : DECISION ON PETITION
Filed: October 15, 2003 : TO WITHDRAW
Attorney Docket No. 355492-4250 : FROM RECORD
:

This is a decision on the Request to Withdraw as attorney or agent of record under 37 C.F.R. § 1.36(b), filed December 27, 2005.

The request is **NOT APPROVED**.

A grantable request to withdraw as attorney/agent of record must be signed by every attorney/agent seeking to withdraw or contain a clear indication that one attorney is signing on behalf of another/others. A request to withdraw will not be approved unless at least 30 (thirty) days would remain between the date of approval and the later of the expiration date of a time to file a response or the expiration date of the maximum time period which can be extended under 37 C.F.R. § 1.136(a).

The request cannot be approved because 37 CFR 10.40 states, "[a] practitioner shall not withdraw from employment in a proceeding before the Office without permission from the Office[.]" Additionally, 37 CFR 10.40 states, "i[f] paragraph (b) of this section is not applicable, a practitioner may not request permission to withdraw in matters pending before the Office unless such request or such withdrawal is because: [. . .]" Reasons a practitioner can permissively withdraw follow the later quotation.

Since the request for withdrawal as attorney or agent submitted on December 27, 2005 provides no reasons for withdrawal, the Office cannot at this time determine whether practitioner's request is one of the mandatory or permissive reasons enumerated in 37 CFR 10.40. Any subsequent requests must include reasons for withdrawal. Please note that there is a space provided for on PTO/SB/83 (Request for Withdrawal as Attorney or Agent) to supply practitioner's reasons.

All future communications from the Office will continue to be directed to the above-listed address until otherwise notified by applicant.

Telephone inquiries concerning this decision should be directed to Irvin Dingle at 571-272-3210.

Denise Pothier
Petitions Examiner
Office of Petitions

cc: Christopher Porter
Medical Genesis, Inc.
19756 NE 127th Place
Woodinville, WA 98072

UNITED STATES PATENT AND TRADEMARK OFFICE

COMMISSIONER FOR PATENTS
UNITED STATES PATENT AND TRADEMARK OFFICE
P.O. BOX 1450
ALEXANDRIA, VA 22313-1450
www.uspto.gov

Paper No.

COPY MAILED

AUG 31 2009

OFFICE OF PETITIONS

CLARK & ELBING LLP / EISAI
101 FEDERAL STREET
SUITE 1500
BOSTON MA 02110

In re Patent No. 7,470,720	:	
Littlefield et al.	:	DECISION ON REQUEST
Issue Date: December 30, 2008	:	FOR RECONSIDERATION OF
Application No. 10/687,526	:	PATENT TERM ADJUSTMENT
Filed: October 16, 2003	:	and
Attorney Docket No. 04520/029002	:	NOTICE OF INTENT TO ISSUE
	:	CERTIFICATE OF CORRECTION

This is a decision on the "APPLICATION FOR PATENT TERM ADJUSTMENT UNDER 37 C.F.R. § 1.705," filed on February 27, 2009 Patentee requests that the Patent Term Adjustment for the above-identified patent be increased by thirty-seven (37) days from 456 days to 493 days.

The request for reconsideration of the patent term adjustment indicated in the patent is **GRANTED**.

The patent term adjustment indicated in the patent is to be corrected by issuance of a certificate of correction showing a revised Patent Term Adjustment of four hundred ninety-three (493) days.

On December 30, 2008, the above-identified application matured into U.S. Patent No. 7,470,720. The instant request for reconsideration filed on February 27, 2009 was timely filed within 2 months of the date the patent issued. See § 1.705(d). The Patent issued with a revised Patent Term Adjustment of 456 days.

Patentee contends that the reduction in patent term adjustment of 37 days for the filing of a miscellaneous incoming letter after the mailing of the notice of allowance, is incorrect and should be removed. Specifically, patentee asserts that the letter filed on November 24, 2008 was a transmittal letter and an authorization to charge the issue and publication fees and was not a failure to engage in reasonable efforts to conclude processing or examination.

The OG Notice[1] states that:

> Accordingly, the Office is publishing this notice to provide guidance in interpreting the provisions of 37 CFR 1.704(c)(10) to clarify that submission of certain papers after a "Notice of Allowance," which do not cause substantial interference and delay in the patent issue process, are not considered a "failure to engage in reasonable efforts" to conclude processing or examination of an application. The following are examples of such papers: (1) Issue Fee Transmittal (PTOL-85B), (2) Power of Attorney, (3) Power to Inspect, (4) Change of Address, (5) Change of Status (small/not small entity status), (6) a response to the examiner's reasons for allowance, and (7) letters related to government interests (e.g., those between NASA and the Office). Therefore, the submission of these papers after a Notice of Allowance will not be considered a "failure to engage in reasonable efforts" to conclude processing or examination of an application and would not result in reduction of a patent term adjustment pursuant to 37 CFR 1.704(c)(10). Papers that **will be** considered a failure to engage in reasonable efforts to conclude processing or examination of an application include: (1) a request for a refund; (2) a status letter; (3) amendments under 37 CFR 1.312; (4) late priority claims; (5) a certified copy of a priority document; (6) drawings; (7) letters related to biologic deposits; and (8) oaths or declarations. 37 CFR 1.704(c)(10).
>
> (emphasis added)

---

[1] See Revision of Patent Term Extension and Patent Term Adjustment Provisions, 1282 O.G. 100, 69 Fed. Reg. 21704, April 22, 2004.

A review of the official file reveals that this letter was a "Reply to Notice of Allowance." The letter references the accompanying PTOL-85(b) Fee(s) Transmittal form and authorizes the charging of the issue fee, publication fee, and the patent copy fee for ten patent copies.

Accordingly, the subject letter is not considered a "failure to engage in reasonable efforts" to conclude processing or examination of an application. Patentees should not have been assessed the 37 days of applicant delay for the filing of the "Reply To Notice of Allowance" filed on November 24, 2008.

In view thereof, the patent term adjustment indicated on the patent should be four hundred ninety-three (493) days (806 days of Office delay and 313 (350-37) days of applicant delay).

The Office acknowledges submission of the $200.00 fee set forth in 37 CFR 1.18(e). No additional fees are required.

The application is being referred to the Certificate of Correction Branch for issuance of a certificate of correction to rectify this error. The Office will issue a certificate of correction indicating that the term of the above-identified patent is extended or adjusted by FOUR HUNDRED NINETY-THREE (493) days.

Telephone inquiries specific to this matter should be directed to Douglas I. Wood, Senior Petitions Attorney, at (571) 272-3231.

/Anthony Knight/

Anthony Knight
Supervisor
Office of Petitions

Enclosure: Copy of DRAFT Certificate of Correction

UNITED STATES PATENT AND TRADEMARK OFFICE

CERTIFICATE OF CORRECTION

PATENT : 7,470,720 B2

DATED : December 30, 2008

INVENTOR(S) : Littlefield et al.

It is certified that error appears in the above-identified patent and that said Letters Patent is hereby corrected as shown below:

On the cover page,

[*] Notice: Subject to any disclaimer, the term of this patent is extended or adjusted under 35 USC 154(b) by (456) days

Delete the phrase "by 456 days" and insert – by 493 days--

UNITED STATES PATENT AND TRADEMARK OFFICE

Commissioner for Patents
United States Patent and Trademark Office
P.O. Box 1450
Alexandria, VA 22313-1450
www.uspto.gov

EMCH, SCHAFFER, SCHAUB & PORCELLO CO
P O BOX 916
ONE SEAGATE SUITE 1980
TOLEDO OH 43697

MAILED

MAR 3 0 2010

OFFICE OF PETITIONS

In re Patent No. 6,923,028 :
Issue Date: August 2, 2005 :
Application No. 10/687,527 : DECISION ON PETITION
Filed: October 16, 2003 :
Attorney Docket No. 03118 :

This is a decision on the petition under 37 CFR 1.378(c), filed January 28, 2010 to accept the unintentionally delayed payment of a maintenance fee for the above-identified patent.

The petition is **GRANTED**.

This patent expired on August 3, 2009 for failure to pay the three and one-half year maintenance fee. Since this petition was submitted within twenty-four months after the six-month grace period provided in 37 CFR 1.362(e), the petition was timely filed under the provisions of 37 CFR 1.378(c).

The maintenance fee is hereby accepted and the above-identified patent is reinstated as of the mail date of this decision.

It is not apparent whether the person signing the instant petition was ever given a power of attorney or authorization of agent to prosecute this patent. In accordance with 37 CFR 1.34(a), the signature appearing on the petition shall constitute a representation to the United States Patent and Trademark Office that he/she is authorized to represent the particular party in whose behalf he/she acts.

Telephone inquiries concerning this decision should be directed to the undersigned at (571) 272-7751.

Joan Olszewski
Petitions Examiner
Office of Petitions

UNITED STATES PATENT AND TRADEMARK OFFICE

Commissioner for Patents
United States Patent and Trademark Office
P.O. Box 1450
Alexandria, VA 22313-1450
www.uspto.gov

SENNIGER POWERS LLP
100 NORTH BROADWAY
17TH FLOOR
ST LOUIS, MO 63102

COPY MAILED

DEC 03 2009

OFFICE OF PETITIONS

In re Application of :
David A. Morgenstern :
Application No. 10/687,541 : ON APPLICATION FOR
Filed: October 16, 2003 : PATENT TERM ADJUSTMENT
Atty Docket No. MTC 6888.2(40-21(52925)C) :

This is in response to the "APPLICATION FOR PATENT TERM ADJUSTMENT UNDER 37 C.F.R. § 1.705(b)" filed September 4, 2009. Applicant submits that the patent term adjustment to be indicated on the patent is one thousand fifty (1,050) days, not four hundred eighty-four (484) days as calculated by the Office as of the mailing of the initial determination of patent term adjustment. Applicant requests this correction solely on the basis that the Office will take in excess of three years to issue this patent.

As the instant application for patent term adjustment requests reconsideration of the patent term adjustment as it relates to the Office's failure to issue the patent within 3 years of the filing date, the application for patent term adjustment under 37 CFR 1.705(b) is **DISMISSED as PREMATURE**.

Knowledge of the actual date the patent issues is required to calculate the amount, if any, of additional patent term patentee is entitled to for Office failure to issue the patent within 3 years. See § 1.702(b). (This is true even where a request for continued examination (RCE) was filed). The computer will not undertake the § 1.702(b) calculation until the actual date of issuance of the patent has been determined. Likewise, the computer will not calculate any further Office delay under § 1.702(a)(4) or applicant delay under § 1.704(c)(10) until the actual date of issuance of the patent has been determined. As such, the Office can not make a determination on the correctness of the patent term adjustment until the patent has issued.

Requesting reconsideration of the patent term adjustment to be indicated on the patent under 37 CFR 1.705(b) based on the initial determination of patent term adjustment and a projected issuance date of the patent (or even the filing date of the request for continued examination) is premature. Accordingly, it is appropriate to dismiss as premature such a request.

Rather than file an application for patent term adjustment under 37 CFR 1.705(b) contesting the 37 CFR 1.702(b) calculation at the time of the mailing of the notice of allowance, applicant is advised that they may wait until the time of the issuance of the patent and file a request for reconsideration of the patent term adjustment pursuant to 37 CFR 1.705(d). As the USPTO does not calculate the amount of time earned pursuant to 37 CFR 1.702(b) until the time of the issuance of the patent, the Office will consider any request for reconsideration of the patent term adjustment due to an error in the calculation of 37 CFR 1.702(b) to be timely if the request for reconsideration is filed within two months of the issuance of the patent. However, as to all other bases for contesting the initial determination of patent term adjustment received with the notice of allowance, applicant must timely file an application for patent term adjustment prior to the payment of the issue fee[1].

It is noted that any period of adjustment will be entered in light of 35 U.S.C. 154(B) GUARANTEE OF NO MORE THAN 3-YEAR APPLICATION PENDENCY, which provides that:

> Subject to the limitations under paragraph (2), if the issue of an original patent is delayed due to the failure of the United States Patent and Trademark Office to issue a patent within 3 years after the actual filing date of the application in the United States, not including —

---

[1] For example, if applicant disputes both the calculation of patent term adjustment under 37 CFR 1.702(a)(1) for Office failure to mail a first Office action or notice of allowance not later than fourteen months after the date on which the application was filed and under 37 CFR 1.702(b) for Office failure to issue a patent within three years of the actual filing date of the application, then applicant must still timely file an application for patent term adjustment prior to the payment of the issue fee to contest the calculation of Office delay in issuing a first Office action or notice of allowance. See 37 CFR 1.705(b) and 35 U.S.C. 154(b)(3)(B). A dispute as to the calculation of the §1.702(a)(1) period raised on request for reconsideration of patent term adjustment under 37 CFR 1.705(d) will be dismissed as untimely filed.

(i) any time consumed by continued examination of the application requested by the applicant under section 132(b);

It is further noted that a Request for Continued Examination (RCE) was filed in this application on May 5, 2008.

Deposit account 19-1345 will be charged for the $200.00 fee set forth in 37 CFR 1.18(e) for consideration of the application for patent term adjustment under 37 CFR 1.705(b).

Any request for reconsideration of the patent term adjustment indicated on the patent must be timely filed within 2 months after issuance pursuant to 37 CFR 1.705(d) and must include payment of the required fee under 37 CFR 1.18(e).

The Office of Data Management has been advised of this decision. This application is being referred to the Office of Data Management for issuance of the patent.

Telephone inquiries specific to this decision should be directed to Kenya A. McLaughlin, Petitions Attorney, at (571) 272-3222.

C. T. Donnell

Christina Tartera Donnell
Senior Petitions Attorney
Office of Petitions

UNITED STATES PATENT AND TRADEMARK OFFICE

COMMISSIONER FOR PATENTS
UNITED STATES PATENT AND TRADEMARK OFFICE
P.O. BOX 1450
ALEXANDRIA, VA 22313-1450
www.uspto.gov

FOLEY & LARDNER, LLP
1530 PAGE MILL ROAD
PALO ALTO, CA 94304

COPY MAILED

JUN 09 2006

OFFICE OF PETITIONS

In re Application of	:	
Porter, et. al.	:	DECISION ON REQUEST
Application No. 10/687,545	:	TO WITHDRAW FROM
Filed: October 15, 2003	:	RECORD
Attorney Docket No. 355492-4200	:	

This is a decision on the Request to Withdraw as attorney or agent of record under 37 CFR § 1.36(b), filed December 27, 2005.

The request is **APPROVED**.

A grantable request to withdraw as attorney/agent of record must be signed by every attorney/agent seeking to withdraw or contain a clear indication that one attorney is signing on behalf of another/others. A request to withdraw will not be approved unless at least 30 (thirty) days would remain between the date of approval and the later of the expiration date of a time to file a response or the expiration date of the maximum time period which can be extended under 37 CFR § 1.136(a).

The request was signed by Lorna L. Tanner on behalf of all attorneys/agents of record who are associated with Customer No. 38706.

All attorneys/agents associated with the Customer No. 38706 have been withdrawn. Therefore, applicant is reminded that there are no attorneys/agents of record at this time.

The request to change the correspondence address of record has been accepted. All future communications from the Office will be directed to the address below until otherwise properly notified by the applicant.

There is an Office action mailed January 31, 2006 that requires a reply from the applicant.

Telephone inquiries concerning this decision should be directed to Andrea Smith at (571) 272-3226.

Andrea Smith
Petitions Examiner
Office of Petitions

Conferee:

cc: Christopher Porter
Medical Genesis, Inc.
19756 NE 127th Place
Woodinville, WA 98072

UNITED STATES PATENT AND TRADEMARK OFFICE

COMMISSIONER FOR PATENTS
UNITED STATES PATENT AND TRADEMARK OFFICE
P.O. BOX 1450
ALEXANDRIA, VA 22313-1450
WWW.USPTO.GOV

Paper No. None

MAYER & WILLIAMS PC
251 NORTH AVENUE WEST
2ND FLOOR
WESTFIELD NJ 07090

COPY MAILED
SEP 22 2006
OFFICE OF PETITIONS

In re Application of :
David S. Devincentis et al. :
Application No. 10/687,547 : DECISION ON PETITION
Filing Date: October 16, 2003 : UNDER 37 C.F.R. § 1.137(B)
Attorney Docket Number: 9005/11 :
Title: OPTICAL AMPLIFIER MODULE :
HOUSED IN A UNIVERSAL CABLE :
JOINT FOR AN UNDERSEA OPTICAL :
TRANSMISSION SYSTEM

This is a decision on the petition under 37 C.F.R. §1.137(b)[1], filed March 22, 2006, to revive the above-identified application.

The above-identified application became abandoned for failure to reply in a timely manner to the non-final Office action, mailed March 23, 2005, which set a shortened statutory period for reply of three months. No response was received, and no extensions of time under the provisions of 37 C.F.R. §1.136(a) were requested. Accordingly, the above-identified application became abandoned on June 24, 2005. A notice of abandonment was mailed on, November 17, 2005.

37 C.F.R. §1.137(b)(3) requires a statement that the entire delay in filing the required reply from the due date for the reply

1 A grantable petition pursuant to 37 C.F.R. 1.137(b) must be accompanied by:
(1) The reply required to the outstanding Office action or notice, unless previously filed;
(2) The petition fee as set forth in § 1.17(m);
(3) A statement that the entire delay in filing the required reply from the due date for the reply until the filing of a grantable petition pursuant to this paragraph was unintentional. The Commissioner may require additional information where there is a question whether the delay was unintentional, and;
(4) Any terminal disclaimer (and fee as set forth in § 1.20(d)) required pursuant to paragraph (d) of this section.

until the filing of a grantable petition pursuant to 37 C.F.R. §1.137(b) was unintentional. Since the statement contained in the instant petition varies from the language required by 37 C.F.R. §1.137(b)(3), the statement contained in the instant petition is being construed as the statement required by 37 C.F.R. §1.137(b)(3) and petitioner must notify the Office if this is not a correct interpretation of the statement contained in the instant petition.

With the present petition, Petitioner has submitted the petition fee, a response to the non-final Office action, and a statement which is being construed as the proper statement of unintentional delay. A terminal disclaimer is not required.

Petitioner has met all requirements for a grantable petition under 37 C.F.R. §1.137(b). As such, the petition is **GRANTED**.

The Technology Center will be notified of this decision. The Technology Center's support staff will notify the Examiner of this decision, so that the response to the non-final Office action which was received with the present petition can be processed.

The general phone number for the Office of Petitions which should be used for status requests is (571) 272-3282. Telephone inquiries regarding this decision should be directed to the undersigned at (571) 272-3225.

Paul Shanoski
Senior Attorney
Office of Petitions
United States Patent and Trademark Office

UNITED STATES PATENT AND TRADEMARK OFFICE

Commissioner for Patents
United States Patent and Trademark Office
P.O. Box 1450
Alexandria, VA 22313-1450
www.uspto.gov

COPY MAILED

NOV 13 2008

OFFICE OF PETITIONS

CHOATE, HALL & STEWART LLP
TWO INTERNATIONAL PLACE
BOSTON MA 02110

In re Application of :
David S. Devincentis, et. al. :
Application No. 10/687,547 : DECISION ON PETITION
Filed: October 16, 2003 :
Attorney Docket No. 2006669-0046 :

This is a decision on the petition under the unintentional provisions of 37 CFR 1.137(b), filed June 20, 2008, to revive the above-identified application.

The petition is **GRANTED**.

This application became abandoned for failure to timely file a reply within the meaning of 37 CFR 1.113 to the Final Office action of January 4, 2007. The proposed reply required for consideration of a petition to revive must be a Notice of Appeal (and appeal fee required by 37 CFR 41.20(b)(2)), an amendment that *prima facie* places the application in condition for allowance, a Request for Continued Examination (RCE) and submission (37 CFR 1.114), or the filing of a continuing application under 37 CFR 1.53(b). See MPEP 711.03(c)(III)(A)(2). A three month extension of time pursuant to the provisions of 37 CFR 1.136(a) was obtained. Accordingly, the date of abandonment of this application is July 6, 2007.

The petition satisfies the requirements of 37 CFR 1.137(b) in that petitioner has supplied (1) the reply in the form of an amendment that prima facie places the application in a condition for allowance; (2) the petition fee of $770; and (3) a proper statement of unintentional delay.

Telephone inquiries concerning this decision should be directed to Denise Williams at (571) 272-8930.

This application is being referred to Technology Center AU 3663 for appropriate action by the Examiner in the normal course of business on the reply received.

Brian W. Brown
Petitions Examiner
Office of Petitions

UNITED STATES PATENT AND TRADEMARK OFFICE

Commissioner for Patents
United States Patent and Trademark Office
P.O. Box 1450
Alexandria, VA 22313-1450
www.uspto.gov

BINGHAM McCUTCHEN LLP
THREE EMBARCADERO CENTER, 18TH FLOOR
SAN FRANCISCO, CA 94111-4067

COPY MAILED

JAN 18 2006

OFFICE OF PETITIONS

In re Application of	:	
Ivan Mollov et al	:	
Application No. 10/687,552	:	DECISION GRANTING PETITION
Filed: October 15, 2003	:	UNDER 37 CFR 1.313(c)(2)
Attorney Docket No. VM7034922001	:	

This is a decision on the petition, filed January 12, 2006, under 37 CFR 1.313(c)(2) to withdraw the above-identified application from issue after payment of the issue fee.

The petition is **GRANTED**.

The above-identified application is withdrawn from issue for consideration of a submission under 37 CFR 1.114 (request for continued examination). See 37 CFR 1.313(c)(2).

Petitioner is advised that the issue fee paid on November 25, 2005 in the above-identified application cannot be refunded. If, however, the above-identified application is again allowed, petitioner may request that it be applied towards the issue fee required by the new Notice of Allowance.[1]

Telephone inquiries should be directed to the undersigned at (571) 272-3218.

This matter is being referred to Technology Center AU 2878 for processing of the request for continued examination under 37 CFR 1.114 and for consideration of the Information Disclosure Statement.

Frances Hicks
Petitions Examiner
Office of Petitions

---

[1] *The request to apply the issue fee to the new Notice may be satisfied by completing and returning the new Issue Fee Transmittal Form PTOL-85(b) (along with any balance due at the time of payment), which includes the following language thereon: "Commissioner for Patents is requested to apply the Issue Fee and Publication Fee (if any) or re-apply any previously paid issue fee to the application identified above." Petitioner is advised that, whether a fee is indicated as being due or not, the Issue Fee Transmittal Form* ***must*** *be completed and timely submitted to avoid abandonment. Note the language in bold text on the first page of the Notice of Allowance and Fee(s) Due (PTOL-85).*

UNITED STATES PATENT AND TRADEMARK OFFICE

Commissioner for Patents
United States Patent and Trademark Office
P.O. Box 1450
Alexandria, VA 22313-1450
www.uspto.gov

UGS CORP.
5800 GRANITE PARKWAY
SUITE 600
PLANO TX 75024

COPY MAILED

OCT 0 9 2007

OFFICE OF PETITIONS

In re Application of :
Jun WAN et al. :
Application No. 10/687,556 : DECISION ON PETITION
Filed: October 16, 2003 :
Attorney Docket No. 05-03-004 :

This is a decision on the petition under 37 CFR 1.137(b), filed September 10, 2007, to revive the above-identified application.

The petition is **GRANTED**.

The above-identified application became abandoned for failure to reply to the Notice of Allowance and Fee(s) Due ("Notice"), mailed April 19, 2007, which set a shortened statutory period for reply of three (3) months. Accordingly, the above-identified application became abandoned on July 20, 2007.

The petition satisfies the conditions for revival pursuant to the provisions of 37 CFR 1.137(b) in that (1) the reply in the form of an issue fee payment; (2) the petition fee of $1500; and (3) the required statement of unintentional delay have been received. Accordingly, the reply to the Notice of April 19, 2007 is accepted as having been unintentionally delayed.

Telephone inquiries concerning this decision should be directed to Brian Sines at (571) 272-6051 or in his absence, the undersigned at (571) 272-7099.

The application file is being referred to the Office of Publications.

David Bucci
Petitions Examiner
Office of Petitions

UNITED STATES PATENT AND TRADEMARK OFFICE

COMMISSIONER OF PATENTS

August 18, 2005

Richard L. Treanor
Oblon, Spivak, McClelland
Maier & Neustadt
1940 Duke St.
Alexandria, Va 22314

In re Application of:
Xavier Blin, et al
Serial No.: 10/687,581 On Petition
Filing Date: October 20, 2003
For: **COMPOSITION CONTAINING AN OILY PHASE AND A NAPHTHOPYRAN DYE, COSMI TREATMENT PROCESSES**

In response to the petition received on January 18, 2005, to withdraw the holding of abandonment in the above application.

The petition is Granted.

The above-identified application became abandoned for failure to reply within the meaning of 37 C.D.R 1.113 in a timely manner to the Notice to File Missing Parts of Nonprovisional Application mailed January 20, 2004. Which set forth a shortened statutory period for reply of two months. Accordingly, the above-identified application became abandoned March 23, 2004.

The evidence submitted is sufficient to establish that the petitioners did not received the Notice to File Missing Parts of non Provisional Application.

Telephone inquiries concerning this application may be directed to Doshie E. Day (703) 308-3640.

Doshie E. Day
Program Management Assistant
Office of Initial Patent Examination

UNITED STATES PATENT AND TRADEMARK OFFICE

Commissioner for Patents
United States Patent and Trademark Office
P.O. Box 1450
Alexandria, VA 22313-1450
www.uspto.gov

Kelley Drye & Warren LLP
3050 K Street, NW
Suite 400
Washington, DC 20007

COPY MAILED

MAY 22 2008

OFFICE OF PETITIONS

In re Application of	:	
Howard Tanner	:	
Application No. 10/687,622	:	DECISION ON PETITION
Filed: October 20, 2003	:	TO WITHDRAW
Attorney Docket No.	:	FROM RECORD
	:	

This is a decision on the Request to Withdraw as attorney or agent of record under 37 C.F.R. § 1.36(b), filed January 18, 2008.

The request is **APPROVED**.

A grantable request to withdraw as attorney/agent of record must be signed by every attorney/agent seeking to withdraw or contain a clear indication that one attorney is signing on behalf of another/others. A request to withdraw will not be approved unless at least 30 (thirty) days would remain between the date of approval and the later of the expiration date of a time to file a response or the expiration date of the maximum time period which can be extended under 37 C.F.R. § 1.136(a).

The request was signed by John N. Coulby on behalf of all attorneys of record. All attorneys/agents have been withdrawn. Applicant is reminded that there is no attorney of record at this time.

All future correspondence will be directed to the first named inventor Joe Smith at the address indicated below.

There is an outstanding Office action mailed December 31, 2007 that requires a reply from the applicant.

Telephone inquiries concerning this decision should be directed to Terri Williams at 571-272-2991.

Terri Williams
Petitions Examiner
Office of Petitions

cc: **Howard Tanner**
242 East 100 South
Logan, UT 84321

cc: **Hugh H. Trout, III, M.D.**
8218 Wisconsin Avenue, Suite 204
Bethesda, MD 20814

UNITED STATES PATENT AND TRADEMARK OFFICE

UNITED STATES DEPARTMENT OF COMMERCE
United States Patent and Trademark Office
Address: COMMISSIONER FOR PATENTS
P.O. Box 1450
Alexandria, Virginia 22313-1450
www.uspto.gov

APPLICATION NUMBER	FILING OR 371(C) DATE	FIRST NAMED APPLICANT	ATTY. DOCKET NO./TITLE
10/687,622	10/20/2003	Howard Tanner	

CONFIRMATION NO. 4684

POWER OF ATTORNEY NOTICE

25243
KELLEY DRYE & WARREN LLP
3050 K STREET, NW
SUITE 400
WASHINGTON, DC 20007

Date Mailed: 05/21/2008

NOTICE REGARDING CHANGE OF POWER OF ATTORNEY

This is in response to the Power of Attorney filed 01/18/2008.

- The withdrawal as attorney in this application has been accepted. Future correspondence will be mailed to the new address of record. 37 CFR 1.33.

/tswilliams/

Office of Data Management, Application Assistance Unit (571) 272-4000, or (571) 272-4200, or 1-888-786-0101

UNITED STATES PATENT AND TRADEMARK OFFICE

COMMISSIONER FOR PATENTS
UNITED STATES PATENT AND TRADEMARK OFFICE
P.O. BOX 1450
ALEXANDRIA, VA 22313-1450
www.uspto.gov

OBLON, SPIVAK, MCCLELLAND, MAIER & NEUSTADT, P.C.
1940 DUKE STREET
ALEXANDRIA, VA 22314

COPY MAILED

FEB 27 2006

OFFICE OF PETITIONS

In re Application of :
Noboru Tsuboi :
Application No. 10/687,630 : ON PETITION
Filed: October 20, 2003 :
Attorney Docket No.: 244084US3 :

This is a decision on the petition, filed February 24, 2006, under 37 CFR 1.313(c)(2) to withdraw the above-identified application from issue after payment of the issue fee.

The petition is **GRANTED**.

The above-identified application is withdrawn from issue for consideration of a submission under 37 CFR 1.114 (request for continued examination). See 37 CFR 1.313(c)(2).

Petitioner is advised that the issue fee paid on July 22, 2005, in the above-identified application cannot be refunded. If, however, the above-identified application is again allowed, petitioner may request that it be applied towards the issue fee required by the new Notice of Allowance. [1]

Telephone inquiries relating to this decision should be directed to the undersigned at (571) 272-3204.

The application is being referred to Technology Center AU 3748 for further processing of the request for continued examination under 37 CFR 1.114.

Sherry D. Brinkley
Petitions Examiner
Office of Petitions

[1]The request to apply the issue fee to the new Notice may be satisfied by completing and returning the new Issue Fee Transmittal Form PTOL-85(b), which includes the following language thereon: "Commissioner for Patents is requested to apply the Issue Fee and Publication Fee (if any) or re-apply any previously paid issue fee to the application identified above." Petitioner is advised that, whether a fee is indicated as being due or not, the Issue Fee Transmittal Form must be completed and timely submitted to avoid abandonment. Note the language in bold text on the first page of the Notice of Allowance and Fee(s) Due (PTOL-85).

UNITED STATES PATENT AND TRADEMARK OFFICE

Commissioner for Patents
United States Patent and Trademark Office
P.O. Box 1450
Alexandria, VA 22313-1450
www.uspto.gov

OBLON SPIVAK MCCLELLAND MAIER & NEUSTADT PC
1940 DUKE STREET
ALEXANDRIA VA 22314

MAILED

FEB 18 2009

OFFICE OF PETITIONS

In re Application of	:	
Simon, et al.	:	
Application No. 10/687,632	:	DECISION REFUSING STATUS
Filed: October 20, 2003	:	UNDER 37 CFR 1.47(a)
Attorney Docket No. 2332270US0	:	

This is in response to the petition under 37 CFR 1.47(a), filed January 12, 2009.

The petition under 37 CFR 1.47(a) is **DISMISSED**.

Rule 47 applicant is given TWO MONTHS from the mailing date of this decision to reply, correcting the below-noted deficiencies. Any reply should be entitled "Request for Reconsideration of Petition Under 37 CFR 1.47(a)," and should only address the deficiencies noted below, except that the reply may include an oath or declaration executed by the non-signing inventor. **Failure to respond will result in abandonment of the application.** Any extensions of time will be governed by 37 CFR 1.136(a).

A grantable petition under 37 CFR 1.47(a) requires: (1) proof that the non-signing inventor cannot be reached after diligent effort or refuses to sign the oath or declaration after having been presented with the application papers (specification, claims, drawings, oath or declaration); (2) an acceptable oath or declaration in compliance with 37 CFR 1.63; (3) the petition fee; and (4) a statement of the last known address of the non-signing inventor. Rule 47 applicant has not met requirement (1) above.

Rule 47 applicant has not demonstrated diligent effort in finding non-signing inventor McCauley. With respect to showing diligent effort, "an affidavit or declaration of facts should be submitted that fully describes the exact facts which are relied on to establish that a diligent effort was made."[1] Here, the evidence establishes that a copy of the application papers was mailed to the last known address of Simon, but were returned as undeliverable. Knowing that Simon is no longer at that address, Rule 47 applicant has not provided any information of the steps taken to subsequently locate him. Applicant has provided no documentary evidence, such as a copy of an internet search, to support such a finding[2].

Further correspondence with respect to this matter should be addressed as follows:

By mail: Mail Stop Petitions
Commissioner for Patents
P.O. Box 1450
Alexandria VA 22313-1450

By FAX: (571)273-8300
Attn: Office of Petitions

Telephone inquiries related to this decision may be directed to the undersigned at (571)272-3207.

Cliff Congo
Petitions Attorney
Office of Petitions

---

[1] MPEP 409.03(d).

[2] Such documentary evidence should be made part of the affidavit or declaration. See id.

UNITED STATES PATENT AND TRADEMARK OFFICE

Commissioner for Patents
United States Patent and Trademark Office
P.O. Box 1450
Alexandria, VA 22313-1450
www.uspto.gov

COPY MAILED

MAY 05 2009

OFFICE OF PETITIONS

OBLON SPIVAK MCCLELLAND MAIER & NEUSTADT PC
1940 DUKE STREET
ALEXANDRIA VA 22314

In re Application of	:	
Simon, et al.	:	DECISION NOTING JOINDER
Application No. 10/687,632	:	OF INVENTOR AND PETITION
Filed: October 20, 2003	:	UNDER 37 CFR 1.47 MOOT
Attorney Docket No. 2332270US0	:	

This is in response to the renewed petition under 37 CFR 1.47(a), filed April 17, 2009.

The petition under 37 CFR 1.47(a) is **DISMISSED** as moot.

In view of the **joinder** of the inventor, further consideration under 37 CFR 1.47(a) is not necessary and the petition is considered to be **moot**. This application does not have any Rule 1.47(a) status and no such status should appear on the file wrapper. This application need not be returned to this Office for further consideration under 37 CFR 1.47(a).

The application is being forwarded to Group Art Unit 1615 for examination.

Telephone inquiries related to this decision may be directed to the undersigned at (571)272-3207.

Cliff Congo
Petitions Attorney
Office of Petitions

UNITED STATES PATENT AND TRADEMARK OFFICE

Commissioner for Patents
United States Patent and Trademark Office
P.O. Box 1450
Alexandria, VA 22313-1450
www.uspto.gov

BRINKS HOFER GILSON & LIONE
PO BOX 10395
CHICAGO IL 60610

COPY MAILED

MAY 31 2006

OFFICE OF PETITIONS

In re	:	
David H. Griesinger	:	DECISION REGARDING
Application No. 10/687,676	:	PATENT TERM ADJUSTMENT
Filed: October 17, 2003	:	
Attorney Docket No. 11336-641	:	

This decision is in response to the "REQUEST FOR REVIEW OF PATENT TERM ADJUSTMENT", filed April 7, 2006, requesting correction of the patent term adjustment (PTA) indicated on the patent.

The request is **DISMISSED**.

On March 17, 2006, the Office mailed the Determination of Patent Term Adjustment under 35 U.S.C. 154(b) in the above identified application. The Notice stated that the patent term adjustment (PTA) to date is four hundred thirty-three (433) days. Applicants submitted the instant "REQUEST FOR REVIEW OF PATENT TERM ADJUSTMENT" on April 7, 2006. Applicant states that he believes there was an error in his favor in the patent term adjustment calculation.

The Office determined a patent term adjustment of four hundred thirty-three (433) days based on an adjustment for PTO delay of four hundred thirty-three (433) days pursuant to 35 U.S.C. 154(b)(1)(A)(i) and 37 C.F.R. § 1.703(a)(1), reduced by zero (0) days of applicant delay.

A review of the application does not reveal any errors in the calculation of the patent term adjustment.

It is noted that applicants filed a terminal disclaimer on March 6, 2005. The provisions of § 154(b), for adjustment due to examination delay, apply to original applications, other than designs, filed on or after May 29, 2000. The Office calculates patent term adjustment for examination delay in all eligible applications. In calculating the patent term adjustment, the Office does not differentiate between applications that have terminal disclaimers and those that do not. Nor does the Office undertake the burdensome task of reviewing every application with a terminal disclaimer to determine if the patent term adjustment accorded would adjust the term beyond the expiration date specified in the disclaimer.

Rather, on issuance of the application, in compliance with 35 U.S.C. 154(b) and 37 C.F.R. § 1.703(g), it is indicated in the patent that the patent term adjustment indicated therein is subject to any disclaimer. Moreover, it is also stated therein that the patent is subject to a terminal disclaimer.

The application file is being forwarded to the Office of Patent Publication for processing into a patent.

Telephone inquiries specific to this letter should be directed to Cliff Congo, Petitions Attorney, at (571)272-3207.

Kery Fries
Senior Legal Advisor
Office of Patent Legal Administration
Office of Deputy Commissioner
for Patent Examination Policy

UNITED STATES PATENT AND TRADEMARK OFFICE

Commissioner for Patents
United States Patent and Trademark Office
P.O. Box 1450
Alexandria, VA 22313-1450
www.uspto.gov
DFW Feb-08

JAMES R. CYPHER
405 14TH STREET
SUITE 1607
OAKLAND CA 94612

COPY MAILED

FEB 2 8 2008

OFFICE OF PETITIONS

In re Application of	:	
Alfonso Losada	:	DECISION ON PETITION TO
Application Number: 10/687680	:	WITHDRAW HOLDING OF
Filing Date: 10/17/2003	:	ABANDONMENT
Attorney Docket Number:	:	
SST/1306	:	

This is a decision on reference to the "PETITION TO ACCORD FILING DATE FOR EXPRESS MAIL CORRESPONDENCE RECEIVED BY P.T.O. (UNDER 37 C.F.R. § 1.10(c))," filed on January 18, 2008, which is treated as a petition to withdraw the holding of abandonment.

The petition is **GRANTED**.

The application was held abandoned for failure to timely respond to the non-final Office action mailed on June 18, 2007, which set a three (3) month shortened statutory period for reply. Notice of Abandonment was mailed on December 28, 2007.

Petitioner asserts that a proper and timely reply in the form of an amendment in response to the non-final Office action was filed by Express Mail on December 18, 2007. A copy of the reply has been provided with the subject petition.

A review of the record reveals that a timely reply, including the amendment and a three (3) month extension of time, was filed on December 18, 2007, and is located in the Office's Image File Wrapper system.

As such, the papers filed on December 18, 2007, constituted a complete and timely response to the Office action mailed on June 18, 2007.

Therefore, the showing of record is that a response was timely filed, and there is no abandonment in fact.

The holding of abandonment is withdrawn, and the Notice of Abandonment is vacated.

The Office apologizes for any inconvenience to petitioner.

The application will be referred to Technology Center Art Unit 3721 for further processing.

Telephone inquiries concerning this matter may be directed to the undersigned at (571)272-3231.

D Wood

Douglas I. Wood
Senior Petitions Attorney
Office of Petitions

UNITED STATES PATENT AND TRADEMARK OFFICE

Commissioner for Patents
United States Patent and Trademark Office
P.O. Box 1450
Alexandria, VA 22313-1450
www.uspto.gov

FULBRIGHT & JAWORSKI L.L.P.
Michael J. Strauss
801 Pennsylvania Avenue, N. W.
Washington DC 20004-2623

COPY MAILED

MAY 23 2006

OFFICE OF PETITIONS

In re Application of :
Scarano, et al. :
Application No. 10/687,702 : ON PETITION
Filed: October 20, 2003 :
Attorney Docket No. 436.007/09903737 :

This is a decision on the petition under 37 CFR 1.137(b), filed April 24, 2006, to revive the above-identified application.

This application became abandoned for failure to timely pay the issue fee and publication fee within three (3) months of the mailing of the Notice of Allowance and Fee(s) Due, mailed January 9, 2006. Accordingly, this application became abandoned on April 10, 2006. The filing of the instant petition precedes the mailing of A Notice of Abandonment.

Applicants have submitted a proper reply in the form of the issue fee, the publication fee and a completed PTOL-85, an acceptable statement of the unintentional nature of the delay in responding to the January 9, 2006 Notice of Allowance and Fee(s) Due, and the petition fee.

The petition is **granted**.

This application is being forwarded to Publishing Division for processing into a patent.

Telephone inquiries concerning this matter may be directed to the undersigned at (571) 272-3230.

Shirene Willis Brantley

Shirene Willis Brantley
Senior Petitions Attorney
Office of Petitions

UNITED STATES PATENT AND TRADEMARK OFFICE

UNITED STATES DEPARTMENT OF COMMERCE
United States Patent and Trademark Office
Address: COMMISSIONER FOR PATENTS
P.O. Box 1450
Alexandria, Virginia 22313-1450
www.uspto.gov

IBM CORPORATION
IPLAW SHCB/40-3
1701 NORTH STREET
ENDICOTT, NY 13760

Mail Date: 04/20/2010

Applicant	: Nitin Jhingan	: DECISION ON REQUEST FOR
Patent Number	: 7586901	: RECALCULATION of PATENT
Issue Date	: 09/08/2009	: TERM ADJUSTMENT IN VIEW
Appliction No	: 10/687,717	: OF WYETH AND NOTICE OF INTENT TO
Filed	: 10/17/2003	: ISSUE CERTIFICATE OF CORRECTION
		:

The Request for Recalculation is **GRANTED** to the extent indicated.

The patent term adjustment has been determined to be **1391** days. The USPTO will *sua sponte* issue a certificate of correction reflecting the amount of PTA days determined by the recalculation.

Prior to the issuance of the certificate of correction, the USPTO will afford patentee an opportunity to be heard and request reconsideration. Accordingly, patentee has **one month or thirty (30) days**, whichever is longer, to file a request for reconsideration of this patent term adjustment calculation. See 35 U.S.C. 154(b)(3)(B)(ii) and 37 CFR 1.322(a)(4). No extensions of time will be granted under 37 CFR 1.136.

Patentee should use document code PET.OP if electronically filing a request for reconsideration of this patent term adjustment calculation. The patentee must also include the information required by 37 CFR 1.705(b)(2) and the fee required by 37 CFR 1.18(e). If patentee does not file a timely request for reconsideration of this patent term adjustment calculation including the information required by 37 CFR 1.705(b)(2) and the fee required by 37 CFR 1.18(e), the USPTO will issue a certificate of correction reflecting the PTA determination noted above.

Patentee should be aware that in order to preserve the right to review in the United States District Court for the District of Columbia of the USPTO patent term adjustment determination, patentee must ensure that he or she also take the steps required under 35 U.S.C. 154(b)(4)(A) in a timely manner. Nothing in the request for recalculation should be construed as providing an alternative time frame for commencing a civil action under 35 U.S.C. 154(b)(4)(A).

Any questions concerning this decision should be directed to the Office of Patent Legal Administration at 571-272-7702.

UNITED STATES PATENT AND TRADEMARK OFFICE

Commissioner for Patents
United States Patent and Trademark Office
P.O. Box 1450
Alexandria, VA 22313-1450
www.uspto.gov

DELPHI TECHNOLOGIES, INC.
M/C 480-410-202
PO BOX 5052
TROY MI 48007

COPY MAILED
SEP 29 2006
OFFICE OF PETITIONS

In re Application of :
Desousa, et al. :
Application No. 10/687,724 : ON PETITION
Filed: October 17, 2003 :
Attorney Docket No. DP-308522 :

This is a decision on the petition under 37 CFR 1.137(b), filed April 24, 2006 (certificate of mailing date April 19, 2006), to revive the above-identified application.

This application became abandoned for failure to timely pay the issue fee and publication fee within three (3) months of the mailing of the Notice of Allowance and Fee(s) Due, mailed August 18, 2005. Accordingly, this application became abandoned on November 19, 2005. A Notice of Abandonment was mailed on December 30, 2005.

Applicants have submitted a proper reply in the form of the issue fee, the publication fee and a completed PTOL-85, an acceptable statement of the unintentional nature of the delay in responding to the August 18, 2005 Notice of Allowance and Fee(s) Due, and the petition fee.[1]

The petition is **granted**.

This application is being forwarded to Publishing Division for processing into a patent.

Telephone inquiries concerning this matter may be directed to the undersigned at (571) 272-3230.

Shirene Willis Brantley
Senior Petitions Attorney
Office of Petitions

[1] Deposit account no. 50-0831 will be charged the $1,500.00 petition fee.

UNITED STATES PATENT AND TRADEMARK OFFICE

UNITED STATES DEPARTMENT OF COMMERCE
United States Patent and Trademark Office
Address: COMMISSIONER FOR PATENTS
P.O. Box 1450
Alexandria, Virginia 22313-1450
www.uspto.gov

APPL NO.	FILING OR 371 (c) DATE	ART UNIT	FIL FEE REC'D	ATTY.DOCKET NO	DRAWINGS	TOT CLMS	IND CLMS
10/687,733	10/16/2003	2685	1140	02598/0200142-US0	12	31	5

CONFIRMATION NO. 3285

07278
DARBY & DARBY P.C.
P. O. BOX 5257
NEW YORK, NY 10150-5257

CORRECTED FILING RECEIPT

OC000000012281839

Date Mailed: 04/06/2004

Receipt is acknowledged of this regular Patent Application. It will be considered in its order and you will be notified as to the results of the examination. Be sure to provide the U.S. APPLICATION NUMBER, FILING DATE, NAME OF APPLICANT, and TITLE OF INVENTION when inquiring about this application. Fees transmitted by check or draft are subject to collection. Please verify the accuracy of the data presented on this receipt. **If an error is noted on this Filing Receipt, please write to the Office of Initial Patent Examination's Filing Receipt Corrections, facsimile number 703-746-9195. Please provide a copy of this Filing Receipt with the changes noted thereon. If you received a "Notice to File Missing Parts" for this application, please submit any corrections to this Filing Receipt with your reply to the Notice. When the USPTO processes the reply to the Notice, the USPTO will generate another Filing Receipt incorporating the requested corrections (if appropriate).**

Applicant(s)

Sung Tai Jung, Suwon-Shi, KOREA, REPUBLIC OF;
Tae Hyeong Lim, Suwon-Shi, KOREA, REPUBLIC OF;
Young Ok Chung, Suwon-Shi, KOREA, REPUBLIC OF;

Assignment For Published Patent Application

Samsung Electro-Mechanics Co., Ltd., Suwon-Shi, KOREA, REPUBLIC OF;

Domestic Priority data as claimed by applicant

Foreign Applications

REPUBLIC OF KOREA 2003-20630 04/01/2003
REPUBLIC OF KOREA 2003-20631 04/01/2003

If Required, Foreign Filing License Granted: 01/20/2004

Projected Publication Date: 10/07/2004

Non-Publication Request: No

Early Publication Request: No

Title

Cellular phone and automatic revolution method thereof

Preliminary Class

455

LICENSE FOR FOREIGN FILING UNDER
Title 35, United States Code, Section 184
Title 37, Code of Federal Regulations, 5.11 & 5.15

GRANTED

The applicant has been granted a license under 35 U.S.C. 184, if the phrase "IF REQUIRED, FOREIGN FILING LICENSE GRANTED" followed by a date appears on this form. Such licenses are issued in all applications where the conditions for issuance of a license have been met, regardless of whether or not a license may be required as set forth in 37 CFR 5.15. The scope and limitations of this license are set forth in 37 CFR 5.15(a) unless an earlier license has been issued under 37 CFR 5.15(b). The license is subject to revocation upon written notification. The date indicated is the effective date of the license, unless an earlier license of similar scope has been granted under 37 CFR 5.13 or 5.14.

This license is to be retained by the licensee and may be used at any time on or after the effective date thereof unless it is revoked. This license is automatically transferred to any related applications(s) filed under 37 CFR 1.53(d). This license is not retroactive.

The grant of a license does not in any way lessen the responsibility of a licensee for the security of the subject matter as imposed by any Government contract or the provisions of existing laws relating to espionage and the national security or the export of technical data. Licensees should apprise themselves of current regulations especially with respect to certain countries, of other agencies, particularly the Office of Defense Trade Controls, Department of State (with respect to Arms, Munitions and Implements of War (22 CFR 121-128)); the Office of Export Administration, Department of Commerce (15 CFR 370.10 (j)); the Office of Foreign Assets Control, Department of Treasury (31 CFR Parts 500+) and the Department of Energy.

NOT GRANTED

No license under 35 U.S.C. 184 has been granted at this time, if the phrase "IF REQUIRED, FOREIGN FILING LICENSE GRANTED" DOES NOT appear on this form. Applicant may still petition for a license under 37 CFR 5.12, if a license is desired before the expiration of 6 months from the filing date of the application. If 6 months has lapsed from the filing date of this application and the licensee has not received any indication of a secrecy order under 35 U.S.C. 181, the licensee may foreign file the application pursuant to 37 CFR 5.15(b).

OK TO ENTER: /AG/ (03/17/2010)

PTO/SB/44 (04-05)
Approved for use through 04/03/2007. OMB 0651-0033
U.S. Patent and Trademark Office; U.S. DEPARTMENT OF COMMERCE
Under the Paperwork Reduction Act of 1995, no persons are required to respond to a collection of information unless it displays valid OMB control number.
(Also Form PTO-1050)

UNITED STATES PATENT AND TRADEMARK OFFICE

CERTIFICATE OF CORRECTION

PATENT NO.: 7,549,208

APPLICATION NO.: 10/687,753

ISSUE DATE: June 23, 2009

INVENTOR(S): OKAMOTO et al.

It is hereby certified that an error or errors appear in the above-identified patent and that said Letters Patent is hereby corrected as shown below:

On the cover sheet:

Item (63):

(63) Continuation of application No. 09/856,758, filed on ~~Sep. 14~~Sep. 15, 2001, now Pat. No. 6,731,509.

MAILING ADDRESS OF SENDER
Daniel J. Stanger
BRUNDIDGE & STANGER, P.C.
1700 Diagonal Road, Suite 330
Alexandria, Virginia 22314

This collection of information is required by 37 CFR 1.322, 1.323, and 1.324. The information is required to obtain or retain a benefit by the public which is to file (and by the USPTO to process) an application. Confidentiality is governed by 35 U.S.C. 122 and 37 CFR 1.14. This collection is estimated to take 1.0 hour to complete, including gathering, preparing, and submitting the completed application form to the USPTO. Time will vary depending upon the individual case. Any comments on the amount of time you require to complete this form and/or suggestions for reducing this burden, should be sent to the Chief Information Officer, U.S. Patent and Trademark Office, U.S. Department of Commerce, P.O. Box 1450, Alexandria, VA 22313-1450. DO NOT SEND FEES OR COMPLETED FORMS TO THIS ADDRESS. **SEND TO: Attention Certificate of Corrections Branch, Commissioner for Patents, P.O. Box 1450, Alexandria, VA 22313-1450.**

If you need assistance completing the form, call 1-800-PTO-9199 and select option 2.

OK TO ENTER: /AG/ (03/17/2010)

PTO/SB/44 (04-05)
Approved for use through 04/03/2007. OMB 0651-0033
U.S. Patent and Trademark Office; U.S. DEPARTMENT OF COMMERCE
Under the Paperwork Reduction Act of 1995, no persons are required to respond to a collection of information unless it displays valid OMB control number.
(Also Form PTO-1050)

UNITED STATES PATENT AND TRADEMARK OFFICE

CERTIFICATE OF CORRECTION

PATENT NO.: 7,549,208

APPLICATION NO.: 10/687,753

ISSUE DATE: June 23, 2009

INVENTOR(S): OKAMOTO et al.

It is hereby certified that an error or errors appear in the above-identified patent and that said Letters Patent is hereby corrected as shown below:

On the cover sheet:

After Item (63), please insert:

(86) **PCT/JP99/06595**

§371 (c)(1),
(2), (4) Date: **Sep. 15, 2001**

(87) PCT Pub. No.: **WO00/33249**
PCT Pub. Date: **Jun. 8, 2000**

(30) **Foreign Application Priority Data**

Nov. 30, 1998 (JP) 10-339265

MAILING ADDRESS OF SENDER
Daniel J. Stanger
BRUNDIDGE & STANGER, P.C.
1700 Diagonal Road, Suite 330
Alexandria, Virginia 22314

This collection of information is required by 37 CFR 1.322, 1.323, and 1.324. The information is required to obtain or retain a benefit by the public which is to file (and by the USPTO to process) an application. Confidentiality is governed by 35 U.S.C. 122 and 37 CFR 1.14. This collection is estimated to take 1.0 hour to complete, including gathering, preparing, and submitting the completed application form to the USPTO. Time will vary depending upon the individual case. Any comments on the amount of time you require to complete this form and/or suggestions for reducing this burden, should be sent to the Chief Information Officer, U.S. Patent and Trademark Office, U.S. Department of Commerce, P.O. Box 1450, Alexandria, VA 22313-1450. DO NOT SEND FEES OR COMPLETED FORMS TO THIS ADDRESS. **SEND TO: Attention Certificate of Corrections Branch, Commissioner for Patents, P.O. Box 1450, Alexandria, VA 22313-1450.**

If you need assistance completing the form, call 1-800-PTO-9199 and select option 2.

SPE RESPONSE FOR CERTIFICATE OF CORRECTION

Paper No.: _____

DATE : 03/15/10

TO SPE OF : ART UNIT 2841

SUBJECT : Request for Certificate of Correction for Appl. No.: 10687753 Patent No.: 7549208

Please respond to this request for a certificate of correction within 7 days.

FOR IFW FILES:

Please review the requested changes/corrections as shown in the **COCIN** document(s) in the IFW application image. No new matter should be introduced, nor should the scope or meaning of the claims be changed.

Please complete the response (see below) and forward the completed response to scanning using document code **COCX**.

FOR PAPER FILES:

Please review the requested changes/corrections as shown in the attached certificate of correction. Please complete this form (see below) and forward it with the file to:

Certificates of Correction Branch (C of C)
Randolph Square 9D40-D
Palm Location 7580

You can fax the Directors/SPE response to 571-270-9990

Lamonte Newsome

Certificates of Correction Branch

703-756-1574

Thank You For Your Assistance

The request for issuing the above-identified correction(s) is hereby:

Note your decision on the appropriate box.

- ❑ **Approved** — **All** changes apply.
- ❑ **Approved in Part** — Specify below which changes **do not** apply.
- ❑ **Denied** — State the reasons for denial below.

Comments: _____

_____

_____

_____

_____

_____ _____

SPE **Art Unit**

SPE RESPONSE FOR CERTIFICATE OF CORRECTION

SPE RESPONSE FOR CERTIFICATE OF CORRECTION

Paper No.: _____

DATE : 03/15/10

TO SPE OF : ART UNIT 2841

SUBJECT : Request for Certificate of Correction for Appl. No.: 10687753 Patent No.: 7549208

Please respond to this request for a certificate of correction within 7 days.

FOR IFW FILES:

Please review the requested changes/corrections as shown in the **COCIN** document(s) in the IFW application image. No new matter should be introduced, nor should the scope or meaning of the claims be changed.

Please complete the response (see below) and forward the completed response to scanning using document code **COCX**.

FOR PAPER FILES:

Please review the requested changes/corrections as shown in the attached certificate of correction. Please complete this form (see below) and forward it with the file to:

Certificates of Correction Branch (C of C)
Randolph Square 9D40-D
Palm Location 7580

You can fax the Directors/SPE response to 571-270-9990

Lamonte Newsome

Certificates of Correction Branch

703-756-1574

Thank You For Your Assistance

The request for issuing the above-identified correction(s) is hereby:

Note your decision on the appropriate box.

- ❑ **Approved** — **All** changes apply.
- ❑ **Approved in Part** — Specify below which changes **do not** apply.
- ❑ **Denied** — State the reasons for denial below.

Comments: _____

_____

_____

_____

_____

_____ _____

SPE **Art Unit**

SPE RESPONSE FOR CERTIFICATE OF CORRECTION

SPE RESPONSE FOR CERTIFICATE OF CORRECTION

Paper No.: _____

DATE : 05/27/10

TO SPE OF : ART UNIT 2841

SUBJECT : Request for Certificate of Correction for Appl. No.: 10687753 Patent No.: 7549208

Please respond to this request for a certificate of correction within 7 days.

FOR IFW FILES:

Please review the requested changes/corrections as shown in the **COCIN** document(s) in the IFW application image. No new matter should be introduced, nor should the scope or meaning of the claims be changed.

Please complete the response (see below) and forward the completed response to scanning using document code **COCX**.

FOR PAPER FILES:

Please review the requested changes/corrections as shown in the attached certificate of correction. Please complete this form (see below) and forward it with the file to:

Certificates of Correction Branch (C of C)
Randolph Square 9D40-D
Palm Location 7580

You can fax the Directors/SPE response to 571-270-9990

Lamonte Newsome

Certificates of Correction Branch

703-756-1574

Thank You For Your Assistance

The request for issuing the above-identified correction(s) is hereby:

Note your decision on the appropriate box.

xApproved	**All** changes apply.
❑ **Approved in Part**	Specify below which changes **do not** apply.
❑ **Denied**	State the reasons for denial below.

Comments: Changes approved

SPE RESPONSE FOR CERTIFICATE OF CORRECTION

/jjl/_____ ___2841____

SPE Art Unit

UNITED STATES PATENT AND TRADEMARK OFFICE

Commissioner for Patents
United States Patent and Trademark Office
P.O. Box 1450
Alexandria, VA 22313-1450
www.uspto.gov

OLIFF & BERRIDGE, PLC
P.O. BOX 19928
ALEXANDRIA, VA 22320

COPY MAILED

AUG 0 4 2004

OFFICE OF PETITIONS

In re Application of	:	
Hideki Komatsuda	:	DECISION GRANTING
Application No. 10/687,770	:	PETITION UNDER
Filed: October 20, 2003	:	37 CFR 1.55(c)
Attorney Docket No. 105193.05	:	

This is a decision on the petition under 37 CFR 1.55(c), filed June 29, 2004, for acceptance of an unintentionally delayed claim under 35 U.S.C. § 119 (a) - (d) for benefit of the filing date of the following foreign applications: Japan Application No. 10-260170, filed September 14, 1998.

A petition under 37 CFR 1.55(c) to accept an unintentionally delayed claim for priority requires:

(1) The nonprovisional application claiming the benefit of an earlier filing date must be filed on or after November 29, 2000;

(2) the claim submitted with the petition must identify the prior foreign application for which priority is claimed, as well as any foreign application for the same subject matter and having a filing date before that of the application for which priority is claimed, by the application number, country, and the filing date;

(3) the surcharge of $1,330.00, as set forth in 37 CFR 1.17(t);

(4) a statement that the entire delay between the date the claim was due under 37 CFR 1.55(a)(1) and the date the claim was filed was unintentional. (The Commissioner may require additional information where there is a question whether the delay was unintentional.); and

(5) the above-identified nonprovisional application must be filed within 12 months of the filing date of the foreign application.

The instant pending nonprovisional application was filed after November 29, 2000, and did not include a reference to the foreign application, for which benefit is now sought, within the later of four months from the actual filing date of the application or sixteen months from the filing date of the prior foreign application. Therefore, since the claim for priority is submitted after the period specified in 37 CFR 1.55(a)(1)(i), this is an appropriate petition under the provisions of 37 CFR 1.55(c).

The above-identified pending nonprovisional application was filed on October 20, 2003, which is after November 29, 2000. On June 29, 2004, an executed oath/declaration was received which identifies the foreign application for which priority is claimed by application number, country and filing date. The required petition fee of $1,330.00 was received with the petition. Lastly, petitioner has provided an adequate statement of unintentional delay.

All requirements being met, the petition under 37 CFR 1.55(c) to accept an unintentionally delayed claim for priority under 35 U.S.C. § 119(a)-(d) is **granted**.

A filing receipt accompanies this decision on petition.

This matter is being referred to Technology Center AU 2881.

Any inquiries directly pertaining to this matter may be directed to Wan Laymon at (703) 306-5685.

Frances Hicks
Lead Petitions Examiner
Office of Petition
Office of the Deputy Commissioner
for Patent Examination Policy

ATTACHMENT: Corrected Filing Receipt

UNITED STATES PATENT AND TRADEMARK OFFICE

Commissioner for Patents
United States Patent and Trademark Office
P.O. Box 1450
Alexandria, VA 22313-1450
www.uspto.gov

OLIFF & BERRIDGE, PLC
P.O. BOX 19928
ALEXANDRIA, VA 22320

COPY MAILED

AUG 0 4 2004

OFFICE OF PETITIONS

In re Application of :
Hideki Komatsuda :
Application No. 10/687,770 :
Filed: October 20, 2003 :
Attorney Docket No. 105193.05 :

DECISION GRANTING
PETITION UNDER
37 CFR 1.55(c)

This is a decision on the petition under 37 CFR 1.55(c), filed June 29, 2004, for acceptance of an unintentionally delayed claim under 35 U.S.C. § 119 (a) - (d) for benefit of the filing date of the following foreign applications: Japan Application No. 10-260170, filed September 14, 1998.

A petition under 37 CFR 1.55(c) to accept an unintentionally delayed claim for priority requires:

(1) The nonprovisional application claiming the benefit of an earlier filing date must be filed on or after November 29, 2000;

(2) the claim submitted with the petition must identify the prior foreign application for which priority is claimed, as well as any foreign application for the same subject matter and having a filing date before that of the application for which priority is claimed, by the application number, country, and the filing date;

(3) the surcharge of $1,330.00, as set forth in 37 CFR 1.17(t);

(4) a statement that the entire delay between the date the claim was due under 37 CFR 1.55(a)(1) and the date the claim was filed was unintentional. (The Commissioner may require additional information where there is a question whether the delay was unintentional.); and

(5) the above-identified nonprovisional application must be filed within 12 months of the filing date of the foreign application.

The instant pending nonprovisional application was filed after November 29, 2000, and did not include a reference to the foreign application, for which benefit is now sought, within the later of four months from the actual filing date of the application or sixteen months from the filing date of the prior foreign application. Therefore, since the claim for priority is submitted after the period specified in 37 CFR 1.55(a)(1)(i), this is an appropriate petition under the provisions of 37 CFR 1.55(c).

The above-identified pending nonprovisional application was filed on October 20, 2003, which is after November 29, 2000. On June 29, 2004, an executed oath/declaration was received which identifies the foreign application for which priority is claimed by application number, country and filing date. The required petition fee of $1,330.00 was received with the petition. Lastly, petitioner has provided an adequate statement of unintentional delay.

All requirements being met, the petition under 37 CFR 1.55(c) to accept an unintentionally delayed claim for priority under 35 U.S.C. § 119(a)-(d) is **granted**.

A filing receipt accompanies this decision on petition.

This matter is being referred to Technology Center AU 2881.

Any inquiries directly pertaining to this matter may be directed to Wan Laymon at (703) 306-5685.

Frances Hicks
Lead Petitions Examiner
Office of Petition
Office of the Deputy Commissioner
for Patent Examination Policy

ATTACHMENT: Corrected Filing Receipt

UNITED STATES PATENT AND TRADEMARK OFFICE

Commissioner for Patents
United States Patent and Trademark Office
P.O. Box 1450
Alexandria, VA 22313-1450
www.uspto.gov

Delbert J. Barnard
BARNARD, LOOP & McCORMACK LLP
P.O. Box 58888
Seattle WA 98138-1888

COPY MAILED

JUL 25 2007

OFFICE OF PETITIONS

In re Application of
Brett J. Diffley
Application No. 10/687,778
Filed: October 16, 2003

DECISION ON PETITION

This is a decision on the petition under 37 CFR 1.137(b), filed August 14, 2006, to revive the above-identified application.

The petition is **DISMISSED**.

Any request for reconsideration of this decision must be submitted within TWO (2) MONTHS from the mail date of this decision. Extensions of time under 37 CFR 1.136(a) are permitted. The reconsideration request should include a cover letter entitled "Renewed Petition under 37 CFR 1.137(b)." This is **not** a final agency action within the meaning of 5 U.S.C. § 704.

The application became abandoned for failure to timely reply within the meaning of 37 CFR 1.113 to the final Office action, mailed June 24, 2005, which set a shortened statutory period for reply of three (3) months. No extensions of time under the provisions of 37 CFR 1.136(a) were obtained. Accordingly, the application became abandoned on September 25, 2005.

A grantable petition under 37 CFR 1.137(b) must be accompanied by: (1) the required reply, unless previously filed; (2) the petition fee as set forth in 37 CFR 1.17(m); (3) a statement that the entire delay in filing the required reply from the due date for the reply until the filing of a grantable petition pursuant to 37 CFR 1.137(b) was unintentional; and (4) any terminal disclaimer (and fee as set forth in 37 CFR 1.20(d)) required by 37 CFR 1.137(c). Where there is a question as to whether either the abandonment or the delay in filing a petition under 37 CFR 1.137 was unintentional, the Commissioner may require additional information. *See* MPEP 711.03(c)(II)(C) and (D). The instant petition lacks item (1) above.

The proposed reply required for consideration of a petition to revive after the final office action must be a Notice of Appeal (and appeal fee required by 37 CFR 41.20(b)(2)), an amendment that *prima facie* places the application in condition for allowance, a Request for Continued Examination (RCE) and submission (37 CFR 1.114), or the filing of a continuing application

under 37 CFR 1.53(b). *See* MPEP 711.03(c)(III)(A)(2). Since, according to Examiner Urszula Cegielnik, the amendment submitted does not *prima facie* place the application in condition for allowance, the reply required must be a Notice of Appeal (and appeal fee), RCE, or the filing of a continuing application under 37 CFR 1.53(b). See the enclosed Advisory Action, PTOL-303.

Further correspondence with respect to this matter should be addressed as follows:

By mail: Mail Stop PETITIONS
Commissioner for Patents
Post Office Box 1450
Alexandria, VA 22313-1450

By hand: Customer Service Window
Mail Stop Petitions
Randolph Building
401 Dulany Street
Alexandria, VA 22314

By fax: (571) 273-8300
ATTN: Office of Petitions

Any questions concerning this matter may be directed to Christopher Bottorff at (571) 272-6052 or in his absence, the undersigned at (571) 272-7099.

/David Bucci/
Petitions Examiner
Office of Petitions

enclosure:

(1) Advisory Action Before the Filing of an Appeal Brief, PTOL-303

Advisory Action Before the Filing of an Appeal Brief	Application No. 10/687,778	Applicant(s) DIFFLEY, BRETT J.	
	Examiner Urszula M. Cegielnik	Art Unit 3711	

--The MAILING DATE of this communication appears on the cover sheet with the correspondence address --

THE REPLY FILED 14 August 2007 FAILS TO PLACE THIS APPLICATION IN CONDITION FOR ALLOWANCE.

1. ☒ The reply was filed after a final rejection, but prior to filing a Notice of Appeal. To avoid abandonment of this application, applicant must timely file one of the following replies: (1) an amendment, affidavit, or other evidence, which places the application in condition for allowance; (2) a Notice of Appeal (with appeal fee) in compliance with 37 CFR 41.31; or (3) a Request for Continued Examination (RCE) in compliance with 37 CFR 1.114. The reply must be filed within one of the following time periods:
   a) ☒ The period for reply expires 3 months from the mailing date of the final rejection.
   b) ☐ The period for reply expires on: (1) the mailing date of this Advisory Action, or (2) the date set forth in the final rejection, whichever is later. In no event, however, will the statutory period for reply expire later than SIX MONTHS from the mailing date of the final rejection.

   Examiner Note: If box 1 is checked, check either box (a) or (b). ONLY CHECK BOX (b) WHEN THE FIRST REPLY WAS FILED WITHIN TWO MONTHS OF THE FINAL REJECTION. See MPEP 706.07(f).

Extensions of time may be obtained under 37 CFR 1.136(a). The date on which the petition under 37 CFR 1.136(a) and the appropriate extension fee have been filed is the date for purposes of determining the period of extension and the corresponding amount of the fee. The appropriate extension fee under 37 CFR 1.17(a) is calculated from: (1) the expiration date of the shortened statutory period for reply originally set in the final Office action; or (2) as set forth in (b) above, if checked. Any reply received by the Office later than three months after the mailing date of the final rejection, even if timely filed, may reduce any earned patent term adjustment. See 37 CFR 1.704(b).

NOTICE OF APPEAL

2. ☐ The reply was filed after the date of filing a Notice of Appeal, but prior to the date of filing an appeal brief. The Notice of Appeal was filed on _____. A brief in compliance with 37 CFR 41.37 must be filed within two months of the date of filing the Notice of Appeal (37 CFR 41.37(a)), or any extension thereof (37 CFR 41.37(e)), to avoid dismissal of the appeal. Since a Notice of Appeal has been filed, any reply must be filed within the time period set forth in 37 CFR 41.37(a).

AMENDMENTS

3. ☒ The proposed amendment(s) filed after a final rejection, but prior to the date of filing a brief, will not be entered because
   (a) ☒ They raise new issues that would require further consideration and/or search (see NOTE below);
   (b) ☐ They raise the issue of new matter (see NOTE below);
   (c) ☐ They are not deemed to place the application in better form for appeal by materially reducing or simplifying the issues for appeal; and/or
   (d) ☒ They present additional claims without canceling a corresponding number of finally rejected claims.

   NOTE: *The Amendment (filed 14 August 2007) appears to raise new issues which would require further consideration and/or search. Amended claim 1, for example, recites newly added limitation, "lower portion of the buoyant body is an inflatable structure that includes said bottom opening, and said upper portion has a lower end that is connected to the lower portion substantially about the bottom opening, said lower portion being inflatable to make the buoyant body buoyant, and said upper portion being inflatable to give it a stand up form whereby it stands up from the lower portion. This limitation was not present in the previous set of claims and will need to be addressed.* (See 37 CFR 1.116 and 41.33(a)).

4. ☐ The amendments are not in compliance with 37 CFR 1.121. See attached Notice of Non-Compliant Amendment (PTOL-324).
5. ☐ Applicant's reply has overcome the following rejection(s): _____.
6. ☐ Newly proposed or amended claim(s) _____ would be allowable if submitted in a separate, timely filed amendment canceling the non-allowable claim(s).
7. ☐ For purposes of appeal, the proposed amendment(s): a)☐ will not be entered, or b)☐ will be entered and an explanation of how the new or amended claims would be rejected is provided below or appended.

   The status of the claim(s) is (or will be) as follows:
   Claim(s) allowed: _____.
   Claim(s) objected to: _____.
   Claim(s) rejected: _____.
   Claim(s) withdrawn from consideration: _____.

EUGENE KIM
SUPERVISORY PATENT EXAMINER

AFFIDAVIT OR OTHER EVIDENCE

8. ☐ The affidavit or other evidence filed after a final action, but before or on the date of filing a Notice of Appeal will not be entered because applicant failed to provide a showing of good and sufficient reasons why the affidavit or other evidence is necessary and was not earlier presented. See 37 CFR 1.116(e).
9. ☐ The affidavit or other evidence filed after the date of filing a Notice of Appeal, but prior to the date of filing a brief, will not be entered because the affidavit or other evidence failed to overcome all rejections under appeal and/or appellant fails to provide a showing a good and sufficient reasons why it is necessary and was not earlier presented. See 37 CFR 41.33(d)(1).
10. ☐ The affidavit or other evidence is entered. An explanation of the status of the claims after entry is below or attached.

REQUEST FOR RECONSIDERATION/OTHER

11. ☐ The request for reconsideration has been considered but does NOT place the application in condition for allowance because: _____.
12. ☐ Note the attached Information Disclosure Statement(s). (PTO/SB/08 or PTO-1449) Paper No(s). _____
13. ☐ Other: _____.

UNITED STATES PATENT AND TRADEMARK OFFICE

Commissioner for Patents
United States Patent and Trademark Office
P.O. Box 1450
Alexandria, VA 22313-1450
www.uspto.gov

Delbert J. Barnard
BARNARD, LOOP & McCORMACK LLP
P.O. Box 58888
Seattle WA 98138-1888

COPY MAILED

OCT 0 9 2007

OFFICE OF PETITIONS

In re Application of :
Brett J. DIFFLEY :
Application No. 10/687,778 : DECISION ON PETITION
Filed: October 16, 2003 :

This is a decision on the renewed petition under 37 CFR 1.137(b), filed August 24, 2007, to revive the above-identified application.

The petition is **GRANTED**.

The above-identified application became abandoned for failure to reply to the final Office action mailed June 24, 2005, which set a shortened statutory period for reply of three (3) months. No extensions of time under the provisions of 37 CFR 1.136(a) were obtained. Accordingly, the above-identified application became abandoned on September 25, 2005.

The petition satisfies the conditions for revival pursuant to the provisions of 37 CFR 1.137(b) in that (1) the reply in the form of a previously filed amendment received on August 14, 2006; (2) the petition fee of $750; and (3) the required statement of unintentional delay have been received. Accordingly, the reply to the final Office action of June 24, 2005 is accepted as having been unintentionally delayed.

Telephone inquiries concerning this decision should be directed to Brian Sines at (571) 272-6051 or in his absence, the undersigned at (571) 272-7099.

The application file is being referred to Technology Center AU 3711 for appropriate action on the previously filed amendment.

David Bucci
Petitions Examiner
Office of Petitions

UNITED STATES PATENT AND TRADEMARK OFFICE

Commissioner for Patents
United States Patent and Trademark Office
P.O. Box 1450
Alexandria, VA 22313-1450
www.uspto.gov
DIW Jan-06

GODFRIED R. AKORLI,
BAYER CHEMICALS CORPORATION
PATENTS AND LICENSING
100 BAYER ROAD
PITTSBURGH PA 15205

COPY MAILED

JAN 10 2006

OFFICE OF PETITIONS

In re Application of :
Klipper et al. : DECISION ON PETITION
Application No. 10/687,780 :
Filed: 17 October, 2003 :
Atty Docket No. MO5664D/LeA 33, :

This is a decision on the petition filed on 9 September, 2005, under 37 CFR 1.137(b),[1] to revive the above-identified application.

The petition is **granted**.

The application became abandoned on 4 March, 2005, for failure to timely file a response to the final Office action mailed on 3 December, 2004, which set a three (3) month shortened statutory

[1] Effective December 1, 1997, the provisions of 37 CFR 1.137(b) now provide that where the delay in reply was unintentional, a petition may be filed to revive an abandoned application or a lapsed patent pursuant to 37 CFR 1.137(b). A grantable petition filed under the provisions of 37 CFR 1.137(b) must be accompanied by:

(1) the required reply, unless previously filed. In a nonprovisional application abandoned for failure to prosecute, the required reply may be met by the filing of a continuing application. In a nonprovisional utility or plant application filed on or after June 8, 1995, and abandoned for failure to prosecute, the required reply may also be met by the filing of a request for continuing examination in compliance with § 1.114. In an application or patent, abandoned or lapsed for failure to pay the issue fee or any portion thereof, the required reply must be the payment of the issue fee or any outstanding balance thereof. In an application, abandoned for failure to pay the publication fee, the required reply must include payment of the publication fee.

(2) the petition fee as set forth in 37 CFR 1.17(m);

(3) a statement that the entire delay in filing the required reply from the due date for the reply until the filing of a grantable petition pursuant to 37 CFR 1.137(b) was unintentional. The Commissioner may required additional information where there is a question whether the delay was unintentional; and

(4) any terminal disclaimer (and fee as set forth in 37 CFR 1.20(d)) required pursuant to 37 CFR 1.137(c)).

period for reply. No extensions of the time for reply in accordance with 37 CFR 1.136(a) were obtained. Notice of Abandonment was mailed on 23 June, 2005.

Petitioner has submitted a Request for Continued Examination (RCE), authorization to charge the required fee, and an amendment as the submission required under 37 CFR 1.114.

The RCE fee will be charged to counsel's deposit account, No. 50-2527, as authorized on the transmittal form.

The change of correspondence address filed on 9 September, 2005, cannot be accepted because it was not signed by an attorney of record.[2] Further, there is no indication that petitioner herein was ever empowered to prosecute the instant application. If petitioner desires to receive future correspondence regarding this application, the appropriate power of attorney documentation must be mailed. A courtesy copy of this decision will be mailed to petitioner. However, all future correspondence will be directed to the address of record until such time as appropriate instructions are received to the contrary.

This application is being referred to Technology Center Art Unit 1713 for further processing.

Telephone inquiries concerning this matter may be directed to the undersigned at (571)272-3231.

Douglas I. Wood
Senior Petitions Attorney
Office of Petitions

cc: Jennifer R. Seng
LANXESS Corporation, Law & Intellectual Property Department
111 RIDC Park West Drive
Pittsburgh PA 15275-1112

[2] See MPEP §§ 601.03 and 405.

UNITED STATES PATENT AND TRADEMARK OFFICE

Commissioner for Patents
United States Patent and Trademark Office
P.O. Box 1450
Alexandria, VA 22313-1450
www.uspto.gov
DIW 09-04

COLLEEN SZUCH, ESQUIRE
HONEYWELL INTERNATIONAL INC.
101 COLUMBIA ROAD
P.O. BOX 2245
MORRISTOWN NJ 07962

COPY MAILED

SEP 20 2004

OFFICE OF PETITIONS

In re Application of	
Basu, Mullan, Scheidle, Bass, and Smith	
Application No. 10/687,781	DECISION REFUSING STATUS
Filed: 17 October, 2003	UNDER 37 CFR 1.47(a)
Atty Docket No. H0003615	

This is in response to the petition filed under 37 CFR 1.47(a) on 13 August, 2004.

The petition is **DISMISSED**.

Rule 47 applicant is given TWO MONTHS from the mailing date of this decision to reply, correcting the below-noted deficiencies. Any reply should be entitled "Request for Reconsideration of Petition Under 37 CFR 1.47(a)," and should only address the deficiencies noted below, except that the reply may include an oath or declaration executed by the non-signing inventor. **FAILURE TO RESPOND WILL RESULT IN ABANDONMENT OF THE APPLICATION.** Extensions of time may be obtained in accordance with 37 CFR 1.136(a).

The above-identified application was filed on 17 October, 2003, without an executed oath or declaration. Accordingly, on 21 January, 2004, a Notice to File Missing Parts of Nonprovisional Application was mailed, requiring an executed oath or declaration and a surcharge for its late filing. The Notice was remailed on 11 May, 2004, setting a new two (2) month period for reply.

In response, on 13 August, 2004 (certificate of mailing 11 August, 2004), petitioners filed a one (1) month extension of

time, the present petition, along with a declaration naming Rajat S. Basu, Lawrence F. Mullan, Peter H. Scheile, Steven J. Bass, and Addison M. Smith as joint inventors, signed joint inventors Basu, Mullan, Scheile, and Smith on behalf of themselves and joint inventor Bass.

Petitioners state that a copy of the declaration was sent to the last known address of joint inventor Bass, but that he failed to sign and return the declaration.

A grantable petition under 37 CFR 1.47(a) requires:

(1) proof that the non-signing inventor cannot be reached or located, notwithstanding diligent effort, or refuses to sign the oath or declaration after having been presented with the application papers (specification, claims and drawings);

(2) an acceptable oath or declaration in compliance with 35 U.S.C. §§ 115 and 116;

(3) the petition fee;

(4) a surcharge of $130 or $65 (small entity) if the petition and/or declaration is not filed at the time of filing the application, and

(5) a statement of the last known address of the non-signing inventor.

The petition lacks item (1).

In regards to item (1), petitioners have not provided proof that Bass was ever sent or presented with a copy of the application as filed (specification, including claims, drawings, if any, and the declaration).[1] Petitioners may show proof that a copy of the application was sent or given to the non-signing inventor for review by providing a copy of the cover letter transmitting the application papers (specification, including claims, drawings, if any, and the declaration) to the non-signing inventor or details given in an affidavit or declaration of facts by a person having first-hand knowledge of the details.

Likewise, before a *bona fide* refusal to sign the declaration can be alleged, petitioners must show that a copy of the application was sent or given to the inventor. If the inventor refuses in writing, petitioners must submit a copy of that written refusal with any renewed petition. If the refusal was made orally to a person, then that person must provide details of the refusal in an affidavit or declaration of fact.

---

[1] MPEP 409.03(d).

Additionally, if Bass no longer lives at the last known address, petitioners may show diligent efforts (*e.g.*, by use of Internet or other database searches) to determine a current address for the non-signing inventor. If a more recent address is discovered, petitioners should send or give a copy of the application papers to the inventor at that address.

If the envelope sent to the non-signing inventor at the last known address is returned as undeliverable by the post office, petitioners should provide a copy of the envelope showing that the application was returned as undeliverable with any renewed petition. If the inventor refuses in writing to sign, a copy of that written refusal should be provided with any renewed petition. If the inventor refuses orally, petitioners should submit details of the refusal in an affidavit or declaration of facts by a person having first-hand knowledge of the refusal.

If repeated attempts to contact the non-signing inventor are unsuccessful, petitioners will have shown that despite diligent efforts, the inventor could not be reached.

Further correspondence with respect to this matter should be addressed as follows:

By mail:
Mail Stop Petition
Commissioner for Patents
P.O. Box 1450
Alexandria, VA 22313-1450

By FAX:
(703) 872-9306
Attn: Office of Petitions

By hand:
U.S. Patent and Trademark Office
220 20th Street S.
Customer Window, Mail Stop Petition
Crystal Plaza 2, Lobby, Room 1B03
Arlington, VA 22202

Telephone inquiries related to this decision should be directed to the undersigned at 703-308-6918.

DI Wood

Douglas I. Wood
Senior Petitions Attorney
Office of Petitions

UNITED STATES PATENT AND TRADEMARK OFFICE

Commissioner for Patents
United States Patent and Trademark Office
P.O. Box 1450
Alexandria, VA 22313-1450
www.uspto.gov
DNW 01-05

COLLEEN SZUCH, ESQUIRE
HONEYWELL INTERNATIONAL INC.
101 COLUMBIA ROAD
P.O. BOX 2245
MORRISTOWN NJ 07962

COPY MAILED

JAN 1 0 2005

OFFICE OF PETITIONS

In re Application of	:
Basu, Mullan, Scheidle, Bass, and Smith	:
Application No. 10/687,781	: DECISION ACCORDING STATUS
Filed: 17 October, 2003	: UNDER 37 CFR 1.47(a)
Atty Docket No. H0003615	:

This is in response to the renewed petition filed under 37 CFR 1.47(a) on 22 November, 2004 (certificate of mailing date 19 November, 2004).

The petition is **GRANTED**.

Petitioners have shown that the non-signing inventor cannot be found. Specifically, the affidavit of Karen Reilly filed with the present renewed petition establishes that a copy of the application papers sent to the non-signing inventor was returned as undeliverable. Additional attempts were made to locate the non-singing inventor by mail, telephone, and e-mail. Despite these efforts, the inventor could not be located.

The above-identified application and papers have been reviewed and found in compliance with 37 CFR 1.47(a). This application is hereby accorded Rule 1.47(a) status.

As provided in Rule 1.47(c), this Office will forward notice of this application's filing to the non-signing inventor at the address given in the renewed petition, not the declaration. Notice of the filing of this application will also be published in the Official Gazette.

The application is being forwarded to the Office of Initial Patent Examination for further processing.

Telephone inquiries related to this decision should be directed to the undersigned at 571-272-3231.

D Wood

Douglas I. Wood
Senior Petitions Attorney
Office of Petitions

UNITED STATES PATENT AND TRADEMARK OFFICE

Commissioner for Patents
United States Patent and Trademark Office
P.O. Box 1450
Alexandria, VA 22313-1450
www.uspto.gov
DIW 01-05

Steven J. Bass
1295 Watercrest Circle
Lawrenceville GA 30043

COPY MAILED

JAN 1 0 2005

OFFICE OF PETITIONS

In re Application of
Basu et al.
Application No. 10/687,781
Filed: 17 October, 2003
For: METHOD OF PRODUCING HYDROFLUORCARBONS

Dear Mr. Bass:

You are named as a joint inventor in the above identified United States patent application, filed under the provisions of 35 U.S.C. 116 (United States Code), and 37 CFR 1.47(a), Rules of Practice in Patent Cases. Should a patent be granted on the application you will be designated therein as a joint inventor.

As a named inventor you are entitled to inspect any paper in the file wrapper of the application, order copies of all or any part thereof (at a prepaid cost per 37 CFR 1.19) or make your position of record in the application. Alternatively, you may arrange to do any of the preceding through a registered patent attorney or agent presenting written authorization from you. If you care to join the application, counsel of record (see below) would presumably assist you. Joining in the application would entail the filing of an appropriate oath or declaration by you pursuant to 37 CFR 1.63.

Telephone inquiries regarding this communication should be directed to the undersigned at 571/272-3231. Requests for information regarding your application should be directed to the File Information Unit at 703/308-2733. Information regarding how to pay for and order a copy of the application, or a specific paper in the application, should be directed to Certification Division at 703/308-9726 or 1-800-972-6382 (outside the Washington D.C. area).

D Wood

Douglas I. Wood
Senior Petitions Attorney
Office of Petitions

COLLEEN SZUCH, ESQUIRE
HONEYWELL INTERNATIONAL INC.
101 COLUMBIA ROAD
P.O. BOX 2245
MORRISTOWN NJ 07962

UNITED STATES PATENT AND TRADEMARK OFFICE

Commissioner for Patents
United States Patent and Trademark Office
P.O. Box 1450
Alexandria, VA 22313-1450
www.uspto.gov

IPSG, P.C.
P.O. BOX 700640
SAN JOSE CA 95170-0640

COPY MAILED

NOV 13 2006

OFFICE OF PETITIONS

In re Application of :
SINGH, et al. :
Application No. 10/687,784 : DECISION ON PETITION
Filed: October 17, 2003 : TO WITHDRAW
Attorney Docket No. RZMI-P310 : FROM RECORD
:

This is a decision on the Request to Withdraw as attorney or agent of record under 37 C.F.R. § 1.36(b), filed August 1, 2006.

The request is **NOT APPROVED**.

A grantable request to withdraw as attorney/agent of record must be signed by every attorney/agent seeking to withdraw or contain a clear indication that one attorney is signing on behalf of another/others. A request to withdraw will not be approved unless at least 30 (thirty) days would remain between the date of approval and the later of the expiration date of a time to file a response or the expiration date of the maximum time period which can be extended under 37 C.F.R. § 1.136(a).

The Office cannot approve the request at this time since the reasons provided do not meet any of the conditions under the mandatory or permissive categories enumerated in 37 CFR 10.40. Section 10.40 of Title 37 of the Code of Federal Regulation states, "[a] practitioner shall not withdraw from employment in a proceeding before the Office without permission from the Office[.]" More specifically, 37 CFR 10.40 states, "[i]f paragraph (b) of this section is not applicable, a practitioner may not request permission to withdraw in matter pending before the Office unless such request or such withdrawal is" for one the permissive reasons listed in 37 CFR 10.40(c). The reasons set forth in the request, "at the request of Raza Microelectronics, Inc.", does not meet any of the conditions set forth in 37 CFR 10.40.

In order to request or take action in a patent matter, the assignee must establish its ownership of the patent to the satisfaction of the Director. In this regard, a Statement under 37 CFR 3.73(b) must have either: (i) documentary evidence of a chain of title from the original owner to the assignee (*e.g.*, copy of an executed assignment), and a statement affirming that the documentary evidence of the chain of title from the original owner to the assignee was or concurrently is being

submitted for recordation pursuant to § 3.11; or (ii) a statement specifying where documentary evidence of a chain of title from the original owner to the assignee is recorded in the assignment records of the Office (*e.g.*, reel and frame number).

All future communications from the Office will continue to be directed to the above-listed address until otherwise notified by applicant.

Telephone inquiries concerning this decision should be directed to the undersigned at 571-272-7253.

Monica A. Graves
Petitions Examiner
Office of Petitions

cc: **Raza Microelectronics, Inc.**
Legal Department
18920 Forge Drive
Cupertino, CA 95014-0701

UNITED STATES PATENT AND TRADEMARK OFFICE

Commissioner for Patents
United States Patent and Trademark Office
P.O. Box 1450
Alexandria, VA 22313-1450
www.uspto.gov

IPSG, P.C.
P.O. BOX 700640
SAN JOSE, CA 95170-0640

COPY MAILED

NOV 0 9 2006

OFFICE OF PETITIONS

In re Application of :
LIEN, et al. :
Application No. 10/687,786 : DECISION ON PETITION
Filed: October 17, 2003 : TO WITHDRAW
Attorney Docket No. RZMI-P314 : FROM RECORD
:

This is a decision on the Request to Withdraw as attorney or agent of record under 37 C.F.R. § 1.36(b), filed August 01, 2006.

The request is **NOT APPROVED**.

A grantable request to withdraw as attorney/agent of record must be signed by every attorney/agent seeking to withdraw or contain a clear indication that one attorney is signing on behalf of another/others. A request to withdraw will not be approved unless at least 30 (thirty) days would remain between the date of approval and the later of the expiration date of a time to file a response or the expiration date of the maximum time period which can be extended under 37 C.F.R. § 1.136(a).

The Office cannot approve the request at this time. In order to request or take action in a patent matter, the assignee must establish its ownership of the patent to the satisfaction of the Director. In this regard, a Statement under 37 CFR 3.73(b) must have either: (i) documentary evidence of a chain of title from the original owner to the assignee (*e.g.*, copy of an executed assignment), and a statement affirming that the documentary evidence of the chain of title from the original owner to the assignee was or concurrently is being submitted for recordation pursuant to § 3.11; or (ii) a statement specifying where documentary evidence of a chain of title from the original owner to the assignee is recorded in the assignment records of the Office (*e.g.*, reel and frame number). The power of attorney filed on October 17, 2003 does not include one of the above two options.

All future communications from the Office will continue to be directed to the above-listed address until otherwise properly notified by applicant.

There is no outstanding Office action that requires a reply from the applicant.

Telephone inquiries concerning this decision should be directed to Patricia Volpe at 571-272-6825.

Patricia Volpe
Petitions Examiner
Office of Petitions

cc: Raza Microelectronics, Inc.
Legal Department
18920 Forge Drive
Cupertino, CA 95014-0701

UNITED STATES PATENT AND TRADEMARK OFFICE

UNITED STATES DEPARTMENT OF COMMERCE
United States Patent and Trademark Office
Address: COMMISSIONER FOR PATENTS
P.O. Box 1450
Alexandria, Virginia 22313-1450
www.uspto.gov

ZILKA-KOTAB, PC- RMI
P.O. BOX 721120
SAN JOSE, CA 95172-1120

Mail Date: 04/21/2010

Applicant	: Wei-han Lien	: DECISION ON REQUEST FOR
Patent Number	: 7586911	: RECALCULATION of PATENT
Issue Date	: 09/08/2009	: TERM ADJUSTMENT IN VIEW
Appliction No	: 10/687,786	: OF WYETH AND NOTICE OF INTENT TO
Filed	: 10/17/2003	: ISSUE CERTIFICATE OF CORRECTION
		:

The Request for Recalculation is **GRANTED** to the extent indicated.

The patent term adjustment has been determined to be **1696** days. The USPTO will *sua sponte* issue a certificate of correction reflecting the amount of PTA days determined by the recalculation.

Prior to the issuance of the certificate of correction, the USPTO will afford patentee an opportunity to be heard and request reconsideration. Accordingly, patentee has **one month or thirty (30) days**, whichever is longer, to file a request for reconsideration of this patent term adjustment calculation. See 35 U.S.C. 154(b)(3)(B)(ii) and 37 CFR 1.322(a)(4). No extensions of time will be granted under 37 CFR 1.136.

Patentee should use document code PET.OP if electronically filing a request for reconsideration of this patent term adjustment calculation. The patentee must also include the information required by 37 CFR 1.705(b)(2) and the fee required by 37 CFR 1.18(e). If patentee does not file a timely request for reconsideration of this patent term adjustment calculation including the information required by 37 CFR 1.705(b)(2) and the fee required by 37 CFR 1.18(e), the USPTO will issue a certificate of correction reflecting the PTA determination noted above.

Patentee should be aware that in order to preserve the right to review in the United States District Court for the District of Columbia of the USPTO patent term adjustment determination, patentee must ensure that he or she also take the steps required under 35 U.S.C. 154(b)(4)(A) in a timely manner. Nothing in the request for recalculation should be construed as providing an alternative time frame for commencing a civil action under 35 U.S.C. 154(b)(4)(A).

Any questions concerning this decision should be directed to the Office of Patent Legal Administration at 571-272-7702.

UNITED STATES PATENT AND TRADEMARK OFFICE

Commissioner for Patents
United States Patent and Trademark Office
P.O. Box 1450
Alexandria, VA 22313-1450
www.uspto.gov

Paper No. 101204

DEC 28 2004

IPVENTURE, INC.
5150 EL CAMINO REAL
SUITE A-22
LOS ALTOS, CA 94022

In re Application of:
PEDRO A. SZENTE et al.
Serial No.: 10/687,787
Filed: October 17, 2003
Attorney Docket No.: IPVMBP01

DECISION ON PETITION
TO MAKE SPECIAL

This is a decision on the petition under 37 C.F.R. § 1.102(c), filed January 23, 2004, to make the above-identified application special.

Petitioner requests that the above-identified application be made special under the accelerated examination procedure set forth in the Manual of Patent Examining Procedure (M.P.E.P.) § 708.02, Section IV: Applicant's Age.

A grantable petition to make special under 37 C.F.R. § 1.102, and in accordance with M.P.E.P. § 708.02, Section IV, must include evidence showing that the applicant is sixty five (65) years of age or more. No fee is required for this petition.

The petition includes a copy of a passport and a declaration from the inventor, Pedro A. Szente, stating that he is sixty-five (65) years of age or more.

Accordingly, the petition is GRANTED.

After allowance, this application will be given priority for printing. See M.P.E.P. § 1309.

Inquiries regarding this decision should be directed to Edward Westin at (571) 272-1638.

Edward Westin

Edward Westin, Special Programs Examiner
Technology Center 2800
Semiconductors, Electrical and Optical
Systems and Components

UNITED STATES PATENT AND TRADEMARK OFFICE

Commissioner for Patents
United States Patent and Trademark Office
P.O. Box 1450
Alexandria, VA 22313-1450
www.uspto.gov

COPY MAILED

FEB 22 2007

OFFICE OF PETITIONS

IPSG, P.C.
P.O. BOX 700640
SAN JOSE CA 95170-0640

In re Application of :
Gaurav **SINGH**, et al. :
Application No. 10/687,789 : DECISION ON PETITION
Filed: October 17, 2003 : TO WITHDRAW
Attorney Docket No. RZMI-P309 : FROM RECORD
:

This is a decision on the Request to Withdraw as attorney or agent of record under 37 C.F.R. § 1.36(b), filed August 1, 2006.

The request is **NOT APPROVED**.

A grantable request to withdraw as attorney/agent of record must be signed by every attorney/agent seeking to withdraw or contain a clear indication that one attorney is signing on behalf of another/others. A request to withdraw will not be approved unless at least 30 (thirty) days would remain between the date of approval and the later of the expiration date of a time to file a response or the expiration date of the maximum time period which can be extended under 37 C.F.R. § 1.136(a).

The Office cannot approve the request at this time since the reasons provided do not meet any of the conditions under the mandatory or permissive categories enumerated in 37 CFR 10.40. Section 10.40 of Title 37 of the Code of Federal Regulation states, "[a] practitioner shall not withdraw from employment in a proceeding before the Office without permission from the Office[.]" More specifically, 37 CFR 10.40 states, "[i]f paragraph (b) of this section is not applicable, a practitioner may not request permission to withdraw in matter pending before the Office unless such request or such withdrawal is" for one the permissive reasons listed in 37 CFR 10.40(c). The reasons set forth in the request, "at the request of Raza Microelectronics, Inc." does not meet any of the conditions set forth in 37 CFR 10.40.

In order to request or take action in a patent matter, the assignee must establish its ownership of the patent to the satisfaction of the Director. In this regard, a Statement under 37 CFR 3.73(b) must have either: (i) documentary evidence of a chain of title from the original owner to the assignee (*e.g.*, copy of an executed assignment), and a statement affirming that the documentary evidence of the chain of title from the original owner to the assignee was or concurrently is being

submitted for recordation pursuant to § 3.11; or (ii) a statement specifying where documentary evidence of a chain of title from the original owner to the assignee is recorded in the assignment records of the Office (*e.g.*, reel and frame number). The power of attorney filed on December 5, 2006 does not include one of the above two options.

All future communications from the Office will continue to be directed to the above-listed address until otherwise notified by applicant.

Telephone inquiries concerning this decision should be directed to the undersigned at 571-272-7253.

Monica A. Graves
Petitions Examiner
Office of Petitions

cc: **RAZA MICROELECTRONICS, INC.**
LEGAL DEPARTMENT
18920 FORGE DRIVE
CUPERTINO, CA 95010-0701

UNITED STATES PATENT AND TRADEMARK OFFICE

Commissioner for Patents
United States Patent and Trademark Office
P.O. Box 1450
Alexandria, VA 22313-1450
www.uspto.gov

IPSG, P.C.
P.O. BOX 700640
SAN JOSE CA 95170-0640

In re Application of	:	
Gaurav **SINGH**, et al.	:	
Application No. 10/687,789	:	DECISION ON REQUEST FOR
Filed: October 17, 2003	:	REVOCATION OF POWER
Attorney Docket No. RZMI-P309	:	OF ATTORNEY
	:	

This is a decision on the Request to Revoke the attorney or agent of record under 37 C.F.R. § 1.36(a), filed December 5, 2006.

The request is **NOT APPROVED**.

A power of attorney, pursuant to § 1.32(b), may be revoked at any stage in the proceeding of a case by an applicant for patent (§ 1.41(b)) or an assignee of the entire interest of the applicant under § 3.71(b). Fewer than all of the applicants (or by fewer than the assignee of the entire interest of the applicant) may only revoke the power of attorney upon a showing of sufficient cause, and payment of the petition fee set forth § 1.17(h). For the assignee to take action a proper statement under § 3.73(b) is required.

The request cannot be approved because the statement under 3.73(b) is not proper or **no statement under 3.73(b) was filed**.

In order to request or take action in a patent matter, the assignee must establish its ownership of the patent to the satisfaction of the Director. In this regard, a Statement under 37 CFR 3.73(b) must have either: (i) documentary evidence of a chain of title from the original owner to the assignee (*e.g.*, copy of an executed assignment), and a statement affirming that the documentary evidence of the chain of title from the original owner to the assignee was or concurrently is being submitted for recordation pursuant to § 3.11; or (ii) a statement specifying where documentary evidence of a chain of title from the original owner to the assignee is recorded in the assignment records of the Office (*e.g.*, reel and frame number).

All future communications from the Office will continue to be directed to the above-listed address until otherwise notified by applicant.

Telephone inquiries concerning this decision should be directed to the undersigned at 571-272-7253.

Monica A. Graves
Petitions Examiner
Office of Petitions

cc: **RAZA MICROELECTRONICS, INC.**
LEGAL DEPARTMENT
18920 FORGE DRIVE
CUPERTINO, CA 95014-0701

UNITED STATES PATENT AND TRADEMARK OFFICE

Commissioner for Patents
United States Patent and Trademark Office
P.O. Box 1450
Alexandria, VA 22313-1450
www.uspto.gov

ZILKA-KOTAB, PC- RMI
P.O. BOX 721120
SAN JOSE CA 95172-1120

COPY MAILED

NOV 1 8 2008

In re Application of
Gaurav Singh, et al.
Application No. 10/687,789
Filed: October 17, 2003
Attorney Docket No. RAZA-04900

DECISION ON PETITION

This is a decision on the petition under the unintentional provisions of 37 CFR 1.137(b), filed November 11, 2008, to revive the above-identified application.

The petition is **GRANTED**.

This application became abandoned for failure to timely pay the issue and publication fees on or before July 22, 2008, as required by the Notice of Allowance and Fee(s) Due, mailed April 22, 2008. Accordingly, the date of abandonment of this application is July 23, 2008.

The petition satisfies the requirements of 37 CFR 1.137(b) in that petitioner has supplied (1) the reply in the form of payment of the issue fee of $755.00 and the publication fee of $300.00, (2) the petition fee of $810.00; and (3) a proper statement of unintentional delay.

Telephone inquiries concerning this decision should be directed to undersigned at (571) 272-3213.

This application is being referred to Publishing Division for processing into a patent.

Cheryl Gibson-Baylor

Cheryl Gibson-Baylor
Petitions Examiner
Office of Petitions

OIPE IAP7
NOV 11 2008
PATENT & TRADEMARK OFFICE

PTO/SB/64 (10-08)
Approved for use through 11/30/2008. OMB 0651-0031
U.S. Patent and Trademark Office; U.S. DEPARTMENT OF COMMERCE
Under the Paperwork Reduction Act of 1995, no persons are required to respond to a collection of information unless it displays a valid OMB control number.

PETITION FOR REVIVAL OF AN APPLICATION FOR PATENT ABANDONED UNINTENTIONALLY UNDER 37 CFR 1.137(b)

Docket Number (Optional): RMI1P014/RZMI-P0309-US

First named inventor: Gaurav Singh

Application No.: 10/687,789 Art Unit: 2619

Filed: 10/17/2003 Examiner: Bell, Louis W.

Title: METHOD AND APPARATUS FOR PROVIDING INTERNAL TABLE EXTENSIBILITY BASED ON PRODUCT CONFIGURATION

Attention: Office of Petitions
Mail Stop Petition
Commissioner for Patents
P.O. Box 1450
Alexandria, VA 22313-1450
FAX (571) 273-8300

NOTE: If information or assistance is needed in completing this form, please contact Petitions Information at (571) 272-3282.

The above-identified application became abandoned for failure to file a timely and proper reply to a notice or action by the United States Patent and Trademark Office. The date of abandonment is the day after the expiration date of the period set for reply in the office notice or action plus an extensions of time actually obtained.

APPLICANT HEREBY PETITIONS FOR REVIVAL OF THIS APPLICATION

NOTE: A grantable petition requires the following items:
(1) Petition fee;
(2) Reply and/or issue fee;
(3) Terminal disclaimer with disclaimer fee - required for all utility and plant applications filed before June 8, 1995; and for all design applications; and
(4) Statement that the entire delay was unintentional.

1. Petition fee

☑ Small entity-fee $ 810.00 (37 CFR 1.17(m)). Applicant claims small entity status. See 37 CFR 1.27.

☐ Other than small entity – fee $ _____ (37 CFR 1.17(m))

2. Reply and/or fee

A. The reply and/or fee to the above-noted Office action in the form of _____(identify type of reply):

☐ has been filed previously on _____.
☐ is enclosed herewith.

B. The issue fee and publication fee (if applicable) of $ $1,055.00.

☐ has been paid previously on _____.
☑ is enclosed herewith.

This collection of information is required by 37 CFR 1.137(b). The information is required to obtain or retain a benefit by the public which is to file (and by the USPTO to process) an application. Confidentiality is governed by 35 U.S.C. 122 and 37 CFR 1.11 and 1.14. This collection is estimated to take 1.0 hour to complete, including gathering, preparing, and submitting the completed application form to the USPTO. Time will vary depending upon the individual case. Any comments on the amount of time you require to complete this form and/or suggestions for reducing this burden, should be sent to the Chief Information Officer, U.S. Patent and Trademark Office, U.S. Department of Commerce, P.O. Box 1450, Alexandria, VA 22313-1450. DO NOT SEND FEES OR COMPLETED FORMS TO THIS ADDRESS. **SEND TO: Mail Stop Petition, Commissioner for Patents, P.O. Box 1450, Alexandria, VA 22313-1450.**

If you need assistance in completing the form, call 1-800-PTO-9199 and select option 2.

11/12/2008 INTEFSW 00010228 10687789
01 FC:2453 810.00 DA

PART B - FEE(S) TRANSMITTAL

O I P E
NOV 1 1 2008
PATENT & TRADEMARK OFFICE

Complete and send this form, together with applicable fee(s), to: Mail Mail Stop ISSUE FEE
Commissioner for Patents
P.O. Box 1450
Alexandria, Virginia 22313-1450
or Fax (571)-273-2885

INSTRUCTIONS: This form should be used for transmitting the ISSUE FEE and PUBLICATION FEE (if required). Blocks 1 through 5 should be completed where appropriate. All further correspondence including the Patent, advance orders and notification of maintenance fees will be mailed to the current correspondence address as indicated unless corrected below or directed otherwise in Block 1, by (a) specifying a new correspondence address; and/or (b) indicating a separate "FEE ADDRESS" for maintenance fee notifications.

CURRENT CORRESPONDENCE ADDRESS (Note: Use Block 1 for any change of address)

XXX 7590 04/22/2008
XXXXXXXXXXXXXXXXXX 76265
XXXXXXXXXX Zilka-Kotab
XXXXXXXXXXXXXXX P.O. Box 721120
San Jose, CA 95172-1120

11/12/2008 SSANDAR1 00000010 501351 10687789
01 FC:2501 755.00 DA

Note: A certificate of mailing can only be used for domestic mailings of the Fee(s) Transmittal. This certificate cannot be used for any other accompanying papers. Each additional paper, such as an assignment or formal drawing, must have its own certificate of mailing or transmission.

Certificate of Mailing or Transmission
I hereby certify that this Fee(s) Transmittal is being deposited with the United States Postal Service with sufficient postage for first class mail in an envelope addressed to the Mail Stop ISSUE FEE address above, or being facsimile transmitted to the USPTO (571) 273-2885, on the date indicated below.

Dana Chan	(Depositor's name)
/Dana Chan/	(Signature)
November 11, 2008	(Date)

APPLICATION NO.	FILING DATE	FIRST NAMED INVENTOR	ATTORNEY DOCKET NO.	CONFIRMATION NO.
10/687,789	10/17/2003	Gaurav Singh	RAZA-04900	9869

TITLE OF INVENTION: METHOD AND APPARATUS FOR PROVIDING INTERNAL TABLE EXTENSIBILITY BASED ON PRODUCT CONFIGURATION

APPLN. TYPE	SMALL ENTITY	ISSUE FEE DUE	PUBLICATION FEE DUE	PREV. PAID ISSUE FEE	TOTAL FEE(S) DUE	DATE DUE
nonprovisional	YES	XXX $755	$300	$0	XXX $1055	07/22/2008

EXAMINER	ART UNIT	CLASS-SUBCLASS
BELL, LOUIS W	2619	370-392000

1. Change of correspondence address or indication of "Fee Address" (37 CFR 1.363).
- ☐ Change of correspondence address (or Change of Correspondence Address form PTO/SB/122) attached.
- ☑ "Fee Address" indication (or "Fee Address" Indication form PTO/SB/47; Rev 03-02 or more recent) attached. Use of a Customer Number is required.

2. For printing on the patent front page, list
(1) the names of up to 3 registered patent attorneys or agents OR, alternatively,
(2) the name of a single firm (having as a member a registered attorney or agent) and the names of up to 2 registered patent attorneys or agents. If no name is listed, no name will be printed.
1 Zilka-Kotab, PC
2
3

3. ASSIGNEE NAME AND RESIDENCE DATA TO BE PRINTED ON THE PATENT (print or type)

PLEASE NOTE: Unless an assignee is identified below, no assignee data will appear on the patent. If an assignee is identified below, the document has been filed for recordation as set forth in 37 CFR 3.11. Completion of this form is NOT a substitute for filing an assignment.

(A) NAME OF ASSIGNEE: RMI Corporation
(B) RESIDENCE: (CITY and STATE OR COUNTRY): Cupertino, California

Please check the appropriate assignee category or categories (will not be printed on the patent): ☐ Individual ☑ Corporation or other private group entity ☐ Government

4a. The following fee(s) are submitted:
- ☑ Issue Fee
- ☑ Publication Fee (No small entity discount permitted)
- ☐ Advance Order - # of Copies .....

4b. Payment of Fee(s): (Please first reapply any previously paid issue fee shown above)
- ☐ A check is enclosed.
- ☐ Payment by credit card. Form PTO-2038 is attached.
- ☑ The Director is hereby authorized to charge the required fee(s), any deficiency, or credit any overpayment, to Deposit Account Number 50-1351 (enclose an extra copy of this form).

5. Change in Entity Status (from status indicated above)
(Order No. RMI1P014)
- ☐ a. Applicant claims SMALL ENTITY status. See 37 CFR 1.27.
- ☐ b. Applicant is no longer claiming SMALL ENTITY status. See 37 CFR 1.27(g)(2).

NOTE: The Issue Fee and Publication Fee (if required) will not be accepted from anyone other than the applicant; a registered attorney or agent; or the assignee or other party in interest as shown by the records of the United States Patent and Trademark Office.

Authorized Signature /KEVINZILKA/ Date November 11, 2008
Typed or printed name Kevin J. Zilka Registration No. 41,429

This collection of information is required by 37 CFR 1.311. The information is required to obtain or retain a benefit by the public which is to file (and by the USPTO to process) an application. Confidentiality is governed by 35 U.S.C. 122 and 37 CFR 1.14. This collection is estimated to take 12 minutes to complete, including gathering, preparing, and submitting the completed application form to the USPTO. Time will vary depending upon the individual case. Any comments on the amount of time you require to complete this form and/or suggestions for reducing this burden, should be sent to the Chief Information Officer, U.S. Patent and Trademark Office, U.S. Department of Commerce, P.O. Box 1450, Alexandria, Virginia 22313-1450. DO NOT SEND FEES OR COMPLETED FORMS TO THIS ADDRESS. SEND TO: Commissioner for Patents, P.O. Box 1450, Alexandria, Virginia 22313-1450.

Under the Paperwork Reduction Act of 1995, no persons are required to respond to a collection of information unless it displays a valid OMB control number.

11/12/2008 INTEFSW 00010228 10687789
01 FC:2453 810.00 DA

02 FC:1504 300.00 DA

UNITED STATES PATENT AND TRADEMARK OFFICE

Commissioner for Patents
United States Patent and Trademark Office
P.O. Box 1450
Alexandria, VA 22313-1450
www.uspto.gov

LEIGHTON K. CHONG
OSTRAGER CHONG & FLAHERTY (HAWAII)
841 BISHOP STREET, SUITE 1200
HONOLULU, HI 96813

COPY MAILED

DEC 2 2 2004

OFFICE OF PETITIONS

In re Application of :
Karl E. Stahlkopf :
Application No. 10/687,795 :
Filed: October 17, 2003 :
Attorney Docket No. HECO-KES-P1 :

DECISION ON PETITION
UNDER 37 CFR 1.137(b)

This is a decision on the petition, filed July 2, 2004, which is being treated as a petition under 37 CFR 1.137(b) to revive the instant nonprovisional application for failure to timely notify the U.S. Patent and Trademark (USPTO) of the filing of an application in a foreign country, or under a multinational treaty that requires publication of applications eighteen months after filing. See 37 CFR 1.137(f).

The petition is **GRANTED**.

Petitioner states that the instant nonprovisional application is the subject of an application filed in an eighteen months publication country on December 18, 2003.[1] However, the USPTO was unintentionally not notified of this filing within 45 days subsequent to the filing of the subject application in an eighteen months publication country.

In view of the above, this application became abandoned pursuant to 35 U.S.C. § 122(b)(2)(B)(iii) and 37 CFR 1.213(c) for failure to timely notify the Office of the filing of an application in a foreign country, or under a multilateral international agreement, that requires publication of applications 18 months after filing.

[1] It is noted that the Rescission of Previous Nonpublication Request listed the PCT Application US03/41385 filing date on December 18, 2004, when in fact the correct date is December 18, 2003.

A petition to revive an application abandoned pursuant to 35 U.S.C. 122(b)(2)(B)(iii) for failure to notify the USPTO of a foreign filing must be accompanied by:

(1) the required reply which is met by the notification of such filing in a foreign country or under a multinational treaty;

(2) the petition fee as set forth in 37 CFR 1.17(m); and

(3) a statement that the entire delay in filing the required reply from the due date of the reply until the filing of a grantable petition was unintentional.

The instant petition has been found to be in compliance with 37 CFR 1.137(b). Accordingly, the failure to timely notify the USPTO of a foreign or international filing within 45 days after the date of filing of such foreign or international application as provided by 35 U.S.C. § 122(b)(2)(B)(iii) and 37 CFR 1.213(c) is accepted as having been unintentionally delayed.

The previous Request and Certification under 35 U.S.C. § 122(b)(2)(B)(i) has been rescinded.

A Notice of Allowability and a Notice of Allowance and Fee (s) Due were mailed in this case on May 24, 2004. However, in view of the nonpublication request filed with the application, the Notice of Allowance and Fee (s) Due mailed in this case did not require the submission of a publication fee. Therefore, in view of the rescinding of the nonpublication request and in view of the presence of an authorization to charge any additional fee due located in the file, the $300 publication fee will be charged to petitioner's deposit account. If publication of the application does not occur, applicant may file a request for a refund after the patent issues.

Any inquiries concerning this decision may be directed to Retta Williams at (571) 272-3229.

This application matter is being referred to the Publishing Division.

Frances Hicks
Petitions Examiner
Office of Petitions
Office of the Deputy Commissioner
for Patent Examination Policy

SPE RESPONSE FOR CERTIFICATE OF CORRECTION 10/687807

Paper No.: ____

DATE : 1/25/06

TO SPE OF : ART UNIT 2852

SUBJECT : Request for Certificate of Correction on Patent No.: 6952556 B2

A response is requested with respect to the accompanying request for a certificate of correction.

Please complete this form and return with file, within 7 days to:
Palm location **7580, Certificates of Correction Branch – South Tower – 9A22**
If response is for an IFW, **return to employee (named below) via PUBSCofC Team in MADRAS.**
With respect to the change(s) requested, correcting Office and/or Applicant's errors, should the patent read as shown in the certificate of correction (COCIN)? No new matter should be introduced, nor should the scope or meaning of the claims be changed.

Virginia Tolbert

Thank You For Your Assistance

Certificates of Correction Branch
Tel. No. 703-308-9390 ext. 113

The request for issuing the above-identified correction(s) is hereby:
Note your decision on the appropriate box.

☒ **Approved**	All changes apply.
☐ **Approved in Part**	Specify below which changes **do not** apply.
☐ **Denied**	State the reasons for denial below.

Comments:

DAVID M. GRAY
SUPERVISORY PATENT EXAMINER

SPE

2852
Art Unit

UNITED STATES PATENT AND TRADEMARK OFFICE

UNITED STATES DEPARTMENT OF COMMERCE
United States Patent and Trademark Office
Address: COMMISSIONER FOR PATENTS
P.O. Box 1450
Alexandria, Virginia 22313-1450
www.uspto.gov

HUNTON & WILLIAMS LLP
INTELLECTUAL PROPERTY DEPARTMENT
1900 K STREET, N.W.
SUITE 1200
WASHINGTON, DC 20006-1109

Mail Date: 04/21/2010

Applicant	: Mark Alan Jackson	: DECISION ON REQUEST FOR
Patent Number	: 7577228	: RECALCULATION of PATENT
Issue Date	: 08/18/2009	: TERM ADJUSTMENT IN VIEW
Appliction No	: 10/687,826	: OF WYETH AND NOTICE OF INTENT TO
Filed	: 10/20/2003	: ISSUE CERTIFICATE OF CORRECTION
		:

The Request for Recalculation is **GRANTED** to the extent indicated.

The patent term adjustment has been determined to be **1270** days. The USPTO will *sua sponte* issue a certificate of correction reflecting the amount of PTA days determined by the recalculation.

Prior to the issuance of the certificate of correction, the USPTO will afford patentee an opportunity to be heard and request reconsideration. Accordingly, patentee has **one month or thirty (30) days**, whichever is longer, to file a request for reconsideration of this patent term adjustment calculation. See 35 U.S.C. 154(b)(3)(B)(ii) and 37 CFR 1.322(a)(4). No extensions of time will be granted under 37 CFR 1.136.

Patentee should use document code PET.OP if electronically filing a request for reconsideration of this patent term adjustment calculation. The patentee must also include the information required by 37 CFR 1.705(b)(2) and the fee required by 37 CFR 1.18(e). If patentee does not file a timely request for reconsideration of this patent term adjustment calculation including the information required by 37 CFR 1.705(b)(2) and the fee required by 37 CFR 1.18(e), the USPTO will issue a certificate of correction reflecting the PTA determination noted above.

Patentee should be aware that in order to preserve the right to review in the United States District Court for the District of Columbia of the USPTO patent term adjustment determination, patentee must ensure that he or she also take the steps required under 35 U.S.C. 154(b)(4)(A) in a timely manner. Nothing in the request for recalculation should be construed as providing an alternative time frame for commencing a civil action under 35 U.S.C. 154(b)(4)(A).

Any questions concerning this decision should be directed to the Office of Patent Legal Administration at 571-272-7702.

UNITED STATES PATENT AND TRADEMARK OFFICE

Commissioner for Patents
United States Patent and Trademark Office
P.O. Box 1450
Alexandria, VA 22313-1450
www.uspto.gov

AUG 12 2005

In re Application of BOETTGER ET AL.
Appl. No.: 10/687,834
Filed: October 20, 2003
For: ELECTRIC MOTOR FOR A PUMP DRIVE

WITHDRAWAL FROM ISSUE
37 CFR 1.313

The purpose of this communication is to inform you that the above identified application is being withdrawn from issue pursuant to 37 CFR 1.313.

The application is being withdrawn to permit reopening of prosecution. The reasons therefor will be communicated to you by the examiner.

U.S. Patent and Trademark Office records reveal that the issue fee and the publication fee have been paid. Since the issue fee and the publication fee have been submitted, the applicant may request a refund, or may request that the fee be credited to a deposit account. However, applicant may wait until the application is either again found allowable or held abandoned. If the application is allowed, upon receipt of a new Notice of Allowance and Fees Due, applicant may request that the previously submitted issue fee and publication fee be applied toward payment of the issue fee and publication fee in the amount identified on the new Notice of Allowance and Issue and Publication Fee Due. If the application is abandoned, applicant may request either a refund or a credit to a specified Deposit Account.

The application is being forwarded to the examiner for action.

Richard Seidel
Director
Patent Examining Technology Center 2800

DUANE MORRIS LLP
Suite 700
1667 K Street, N.W.
Washington, DC 20006

UNITED STATES PATENT AND TRADEMARK OFFICE

UNITED STATES DEPARTMENT OF COMMERCE
United States Patent and Trademark Office
Address: COMMISSIONER FOR PATENTS
P.O. Box 1450
Alexandria, Virginia 22313-1450
www.uspto.gov

Woodard, Emhardt, Moriarty, McNett & Henry LLP
Roche Diagnostics
111 Monument Circle, Suite 3700
Indianapolis, IN 46204-5137

Mail Date: 04/20/2010

Applicant	: David W. Burke	: DECISION ON REQUEST FOR
Patent Number	: 7597793	: RECALCULATION of PATENT
Issue Date	: 10/06/2009	: TERM ADJUSTMENT IN VIEW
Appliction No	: 10/687,850	: OF WYETH AND NOTICE OF INTENT TO
Filed	: 10/17/2003	: ISSUE CERTIFICATE OF CORRECTION
		:

The Request for Recalculation is **GRANTED** to the extent indicated.

The patent term adjustment has been determined to be **794** days. The USPTO will *sua sponte* issue a certificate of correction reflecting the amount of PTA days determined by the recalculation.

Prior to the issuance of the certificate of correction, the USPTO will afford patentee an opportunity to be heard and request reconsideration. Accordingly, patentee has **one month or thirty (30) days**, whichever is longer, to file a request for reconsideration of this patent term adjustment calculation. See 35 U.S.C. 154(b)(3)(B)(ii) and 37 CFR 1.322(a)(4). No extensions of time will be granted under 37 CFR 1.136.

Patentee should use document code PET.OP if electronically filing a request for reconsideration of this patent term adjustment calculation. The patentee must also include the information required by 37 CFR 1.705(b)(2) and the fee required by 37 CFR 1.18(e). If patentee does not file a timely request for reconsideration of this patent term adjustment calculation including the information required by 37 CFR 1.705(b)(2) and the fee required by 37 CFR 1.18(e), the USPTO will issue a certificate of correction reflecting the PTA determination noted above.

Patentee should be aware that in order to preserve the right to review in the United States District Court for the District of Columbia of the USPTO patent term adjustment determination, patentee must ensure that he or she also take the steps required under 35 U.S.C. 154(b)(4)(A) in a timely manner. Nothing in the request for recalculation should be construed as providing an alternative time frame for commencing a civil action under 35 U.S.C. 154(b)(4)(A).

Any questions concerning this decision should be directed to the Office of Patent Legal Administration at 571-272-7702.

UNITED STATES PATENT AND TRADEMARK OFFICE

UNITED STATES DEPARTMENT OF COMMERCE
United States Patent and Trademark Office
Address: COMMISSIONER FOR PATENTS
P.O. Box 1450
Alexandria, Virginia 22313-1450
www.uspto.gov

Woodard, Emhardt, Moriarty, McNett & Henry LLP
Roche Diagnostics
111 Monument Circle, Suite 3700
Indianapolis, IN 46204-5137

Mail Date: 04/20/2010

Applicant	: David W. Burke	: DECISION ON REQUEST FOR
Patent Number	: 7597793	: RECALCULATION of PATENT
Issue Date	: 10/06/2009	: TERM ADJUSTMENT IN VIEW
Appliction No	: 10/687,850	: OF WYETH AND NOTICE OF INTENT TO
Filed	: 10/17/2003	: ISSUE CERTIFICATE OF CORRECTION
		:

The Request for Recalculation is **GRANTED** to the extent indicated.

The patent term adjustment has been determined to be **794** days. The USPTO will *sua sponte* issue a certificate of correction reflecting the amount of PTA days determined by the recalculation.

Prior to the issuance of the certificate of correction, the USPTO will afford patentee an opportunity to be heard and request reconsideration. Accordingly, patentee has **one month or thirty (30) days**, whichever is longer, to file a request for reconsideration of this patent term adjustment calculation. See 35 U.S.C. 154(b)(3)(B)(ii) and 37 CFR 1.322(a)(4). No extensions of time will be granted under 37 CFR 1.136.

Patentee should use document code PET.OP if electronically filing a request for reconsideration of this patent term adjustment calculation. The patentee must also include the information required by 37 CFR 1.705(b)(2) and the fee required by 37 CFR 1.18(e). If patentee does not file a timely request for reconsideration of this patent term adjustment calculation including the information required by 37 CFR 1.705(b)(2) and the fee required by 37 CFR 1.18(e), the USPTO will issue a certificate of correction reflecting the PTA determination noted above.

Patentee should be aware that in order to preserve the right to review in the United States District Court for the District of Columbia of the USPTO patent term adjustment determination, patentee must ensure that he or she also take the steps required under 35 U.S.C. 154(b)(4)(A) in a timely manner. Nothing in the request for recalculation should be construed as providing an alternative time frame for commencing a civil action under 35 U.S.C. 154(b)(4)(A).

Any questions concerning this decision should be directed to the Office of Patent Legal Administration at 571-272-7702.

UNITED STATES PATENT AND TRADEMARK OFFICE

UNITED STATES DEPARTMENT OF COMMERCE
United States Patent and Trademark Office
Address: COMMISSIONER FOR PATENTS
P.O. Box 1450
Alexandria, Virginia 22313-1450
www.uspto.gov

DINSMORE & SHOHL LLP
900 LEE STREET
SUITE 600
CHARLESTON, WV 25301

Mail Date: 04/21/2010

Applicant	: Carrie Delcomyn	: DECISION ON REQUEST FOR
Patent Number	: 7582594	: RECALCULATION of PATENT
Issue Date	: 09/01/2009	: TERM ADJUSTMENT IN VIEW
Appliction No	: 10/687,864	: OF WYETH AND NOTICE OF INTENT TO
Filed	: 10/17/2003	: ISSUE CERTIFICATE OF CORRECTION
		:

The Request for Recalculation is **GRANTED** to the extent indicated.

The patent term adjustment has been determined to be **375** days. The USPTO will *sua sponte* issue a certificate of correction reflecting the amount of PTA days determined by the recalculation.

Prior to the issuance of the certificate of correction, the USPTO will afford patentee an opportunity to be heard and request reconsideration. Accordingly, patentee has **one month or thirty (30) days**, whichever is longer, to file a request for reconsideration of this patent term adjustment calculation. See 35 U.S.C. 154(b)(3)(B)(ii) and 37 CFR 1.322(a)(4). No extensions of time will be granted under 37 CFR 1.136.

Patentee should use document code PET.OP if electronically filing a request for reconsideration of this patent term adjustment calculation. The patentee must also include the information required by 37 CFR 1.705(b)(2) and the fee required by 37 CFR 1.18(e). If patentee does not file a timely request for reconsideration of this patent term adjustment calculation including the information required by 37 CFR 1.705(b)(2) and the fee required by 37 CFR 1.18(e), the USPTO will issue a certificate of correction reflecting the PTA determination noted above.

Patentee should be aware that in order to preserve the right to review in the United States District Court for the District of Columbia of the USPTO patent term adjustment determination, patentee must ensure that he or she also take the steps required under 35 U.S.C. 154(b)(4)(A) in a timely manner. Nothing in the request for recalculation should be construed as providing an alternative time frame for commencing a civil action under 35 U.S.C. 154(b)(4)(A).

Any questions concerning this decision should be directed to the Office of Patent Legal Administration at 571-272-7702.

UNITED STATES PATENT AND TRADEMARK OFFICE

COMMISSIONER FOR PATENTS
UNITED STATES PATENT AND TRADEMARK OFFICE
P.O. BOX 1450
ALEXANDRIA, VA 22313-1450
www.uspto.gov

BIRCH STEWART KOLASCH & BIRCH
PO BOX 747
FALLS CHURCH VA 22040-0747

COPY MAILED

FEB 07 2005

OFFICE OF PETITIONS

Applicant: Pettersson et al.
Appl. No.: 10/687,874
Filing Date: October 20, 2003
Title: POSITION DETERMINATION II - CALCULATION
Attorney Docket No.: 3782-0275P
Pub. No.: US 2004/0113893 A1
Pub. Date: June 17, 2004

This is in response to the letter entitled "Letter Requesting Pre-Grant Publication" filed on September 22, 2004, for the above-identified application, wherein the applicant request that the contents of the application be published as the contents of the pregrant publication are from another application.

37 CFR 1.221(b) is applicable "only when the Office makes a material mistake which is apparent from Office records . . . Any request for a corrected publication or revised patent application publication other than provided as provided in paragraph (a) of this section must be filed within two months from the date of the patent application publication. This period is not extendable."

Due to the nature of the errors in this publication, the Office will *sua sponte* publish a corrected patent application publication. The corrected patent application publication will be published in due course, unless the application is allowed and the patent issues before the application is republished.

Inquires concerning this communication should be directed to Mark Polutta at (571) 272-7709.

Mark O. Polutta
Senior Legal Advisor
Office of Patent Legal Administration
Office of the Deputy Commissioner
for Patent Examination Policy

UNITED STATES PATENT AND TRADEMARK OFFICE

UNITED STATES DEPARTMENT OF COMMERCE
United States Patent and Trademark Office
Address: COMMISSIONER FOR PATENTS
P.O. Box 1450
Alexandria, Virginia 22313-1450
www.uspto.gov

APPL NO.	FILING OR 371 (c) DATE	ART UNIT	FIL FEE REC'D	ATTY.DOCKET NO	DRAWINGS	TOT CLMS	IND CLMS
10/687,887	10/20/2003	3663	1060	1163-0472P	33	8	2

CONFIRMATION NO. 2086

02292
BIRCH STEWART KOLASCH & BIRCH
PO BOX 747
FALLS CHURCH, VA 22040-0747

CORRECTED FILING RECEIPT

OC000000013439669

Date Mailed: 08/04/2004

Receipt is acknowledged of this regular Patent Application. It will be considered in its order and you will be notified as to the results of the examination. Be sure to provide the U.S. APPLICATION NUMBER, FILING DATE, NAME OF APPLICANT, and TITLE OF INVENTION when inquiring about this application. Fees transmitted by check or draft are subject to collection. Please verify the accuracy of the data presented on this receipt. **If an error is noted on this Filing Receipt, please write to the Office of Initial Patent Examination's Filing Receipt Corrections, facsimile number 703-746-9195. Please provide a copy of this Filing Receipt with the changes noted thereon. If you received a "Notice to File Missing Parts" for this application, please submit any corrections to this Filing Receipt with your reply to the Notice. When the USPTO processes the reply to the Notice, the USPTO will generate another Filing Receipt incorporating the requested corrections (if appropriate).**

Applicant(s)

Makoto Mikuriya, Tokyo, JAPAN;
Mitsuo Shimotani, Tokyo, JAPAN;
Masaharu Umezu, Tokyo, JAPAN;
Tomoya Ikeuchi, Tokyo, JAPAN;

Domestic Priority data as claimed by applicant

Foreign Applications

JAPAN 2002-320161 11/01/2002

If Required, Foreign Filing License Granted: 01/20/2004

Projected Publication Date: Not Applicable

Non-Publication Request: No

Early Publication Request: No

Title

Data architecture of map data, data architecture of update instruction data, map information processing apparatus, and map information providing apparatus

Preliminary Class

701

LICENSE FOR FOREIGN FILING UNDER
Title 35, United States Code, Section 184
Title 37, Code of Federal Regulations, 5.11 & 5.15

GRANTED

The applicant has been granted a license under 35 U.S.C. 184, if the phrase "IF REQUIRED, FOREIGN FILING LICENSE GRANTED" followed by a date appears on this form. Such licenses are issued in all applications where the conditions for issuance of a license have been met, regardless of whether or not a license may be required as set forth in 37 CFR 5.15. The scope and limitations of this license are set forth in 37 CFR 5.15(a) unless an earlier license has been issued under 37 CFR 5.15(b). The license is subject to revocation upon written notification. The date indicated is the effective date of the license, unless an earlier license of similar scope has been granted under 37 CFR 5.13 or 5.14.

This license is to be retained by the licensee and may be used at any time on or after the effective date thereof unless it is revoked. This license is automatically transferred to any related applications(s) filed under 37 CFR 1.53(d). This license is not retroactive.

The grant of a license does not in any way lessen the responsibility of a licensee for the security of the subject matter as imposed by any Government contract or the provisions of existing laws relating to espionage and the national security or the export of technical data. Licensees should apprise themselves of current regulations especially with respect to certain countries, of other agencies, particularly the Office of Defense Trade Controls, Department of State (with respect to Arms, Munitions and Implements of War (22 CFR 121-128)); the Office of Export Administration, Department of Commerce (15 CFR 370.10 (j)); the Office of Foreign Assets Control, Department of Treasury (31 CFR Parts 500+) and the Department of Energy.

NOT GRANTED

No license under 35 U.S.C. 184 has been granted at this time, if the phrase "IF REQUIRED, FOREIGN FILING LICENSE GRANTED" DOES NOT appear on this form. Applicant may still petition for a license under 37 CFR 5.12, if a license is desired before the expiration of 6 months from the filing date of the application. If 6 months has lapsed from the filing date of this application and the licensee has not received any indication of a secrecy order under 35 U.S.C. 181, the licensee may foreign file the application pursuant to 37 CFR 5.15(b).

UNITED STATES PATENT AND TRADEMARK OFFICE

COMMISSIONER FOR PATENTS
UNITED STATES PATENT AND TRADEMARK OFFICE
P.O. BOX 1450
ALEXANDRIA, VA 22313-1450
www.uspto.gov

JOSEPH S. FARZAM, ESQ.
SUITE 1770
1875 CENTURY PARK EAST
LOS ANGELES, CA 90067

COPY MAILED

APR 17 2006

OFFICE OF PETITIONS

In re Application of :
Ardashes Tarpinian :
Application No. 10/687,889 :
Filed: October 20, 2003 : ON PETITION
Title of Invention: :
TARPIN, A STRING MUSICAL :
INSTRUMENT :

This is a decision on the petition under 37 CFR 1.137(a), filed February 28, 2006, to revive the above-identified application.

The petition under 37 CFR 1.137(a) is **DISMISSED.**

Any further petition to revive the above-identified application must be submitted within TWO (2) MONTHS from the mail date of this decision. Extensions of time under 37 CFR 1.136(a) are permitted. The reconsideration request should include a cover letter entitled "Request for Reconsideration of Petition under 37 CFR 1.137". This is **not** final agency action within the meaning of 5 U.S.C. § 704.

Background

The above-identified application became abandoned for failure to timely and properly reply to the Office Communication, mailed March 29, 2005. The Office Communication set a two (2) month period for reply from the mail date of the Office Communication. Extensions of time were available under 37 CFR 1.136(a). No reply having been received, the application became abandoned on May 30, 2005. A Notice of Abandonment was mailed October 19, 2005.

The instant petition

Applicant files the instant petition and states that the abandonment of the application was unavoidable because he did

not receive the Office Communication. Applicant provides that their address changed in November of 2004.

Applicable Law, Rules and MPEP

A grantable petition to revive an abandoned application under 37 CFR 1.137(a) must be accompanied by: (**1**)the required reply (unless previously filed), which may met by the filing of a notice of appeal and the requisite fee; a continuing application; an amendment or request for reconsideration which *prima facie* places the application in condition for allowance, or a first or second submission under 37 CFR 1.129(a) if the application has been pending for at least two years as of June 8, 1995, taking into account any reference made in such application to any earlier filed application under 35 USC 120, 121 and 365(c); (**2**) the petition fee as set forth in 37 CFR 1.17(l); (**3**) a showing to the satisfaction of the Commissioner that the entire delay in filing the required reply from the due date for the reply until the filing of a grantable petition pursuant to 37 CFR 1.137(a) was unavoidable; and (**4**) any terminal disclaimer (and fee as set forth in 37 CFR 1.20(d)) required pursuant to 37 CFR 1.137(c). The instant petition lacks item (3).

Petitioner must establish that petitioner treated the patent the same as a reasonable and prudent person would treat his or her most important business.

The general standard applied by the Office requires petitioner to establish that petitioner treated the patent the same as a reasonable and prudent person would treat his or her most important business.[1]35 U.S.C. 41(c)(1) states; "The Commissioner may accept the payment of any maintenance fee ... at any time ... if the delay is shown *to the satisfaction of the Commissioner* to have been unavoidable." (emphasis added).

"In the specialized field of patent law, ... the Commissioner of Patent and Trademarks is primarily responsible for the application and enforcement of the various narrow and technical statutory and regulatory provisions. His interpretation of those provisions is entitled to considerable deference." Rydeen

[1] The Commissioner is responsible for determining the standard for unavoidable delay and for applying that standard.

v. Quigg, 748 F.Supp. 900, 904, 16 U.S.P.Q.2d (BNA)1876 (D.D.C. 1990), aff'd without opinion (Rule 36), 937 F.2d 623 (Fed. Cir. 1991) (citing Morganroth v. Quigg, 885 F.2d 843, 848, 12 U.S.P.Q.2d (BNA) 1125 (Fed. Cir. 1989); Ethicon, Inc. v. Quigg, 849 F.2d 1422, 1425, 7 U.S.P.Q.2d (BNA) 1152 (Fed. Cir. 1988) ("an agency' interpretation of a statute it administers is entitled to deference"); see also Chevron U.S.A. Inc. v. Natural Resources Defense Council, Inc., 467 U.S. 837, 844, 81 L. Ed. 694, 104 S. Ct. 2778 (1984) ("if the statute is silent or ambiguous with respect to the specific issue, the question for the court is whether the agency's answer is based on a permissible construction of the statute.")).

"The critical phrase 'unless it be shown to the satisfaction of the Commissioner that such delay was unavoidable' has remained unchanged since first enacted in 1861." Smith v. Mossinghoff, 671 F.2d 533, 538, 213 U.S.P.Q. (BNA) 977 (D.C. Cir. 1982). The standard for "unavoidable" delay for reinstating a patent is the same as the unavoidable standard for reviving an application. See Ray v. Lehman, 55 F.3d 606, 608-609, 34 U.S.P.Q.2d (BNA) 1786, 1787 (Fed. Cir. 1995) (citing In re patent No. 4,409,763, 7 U.S.P.Q.2d (BNA) 1798, 1800 (Comm'r Pat. 1990; Smith v. Mossinghoff, 671 F.2d 533, 538, 213 U.S.P.Q. (BNA) 977 (D.C. Cir. 1982). The court in In re Mattullath, accepted the standard which had been proposed by Commissioner Hall which "requires no more or greater care or diligence than is generally used and observed by prudent and careful men in relation to their most important business." In re Mattullath, 38 App. D.C. 497, 514-515 (1912) (quoting Ex parte Pratt, 1887 Dec. Comm'r Pat. 31, 32-33 (1887)). However, "The question of whether an applicant's delay in prosecuting an application was unavoidable [will] be decided on a case-by-case basis, taking all of the facts and circumstances into account."[2] Nonawareness of the content of, or a misunderstanding of, PTO statutes, PTO rules, the MPEP, or Official Gazette notices, does not constitute unavoidable delay.[3] The statute requires a "showing"

---

[2] Smith v. Mossinghoff, 671 F.2d 533, 538, 213 U.S.P.Q. (BNA) 977 (1982).

[3] See Smith v. Mossinghoff, 671 F.2d 533, 538, 213 U.S.P.Q. (BNA) 977 (Fed. Cir. 1982) (citing Potter v. Dann, 201 U.S.P.Q. (BNA) 574 (D. D.C. 1978) for the proposition that counsel's nonawareness of PTO rules does not constitute "unavoidable" delay)); Vincent v. Mossinghoff, 1985 U.S. Dist. LEXIS 23119, 13, 230 U.S.P.Q. (BNA) 621 (D. D.C. 1985) (Plaintiffs, through their

by petitioner. Therefore, petitioner has the burden of proof. The decision will be based solely on the written, administrative record in existence. It is not enough that the delay was unavoidable; petitioner must prove that the delay was unavoidable. A petition will not be granted if petitioner provides insufficient evidence to "show" that the delay was unavoidable.

Applicant is further advised that the Patent and Trademark Office must rely on the actions or inactions of duly authorized and voluntarily chosen representatives of the applicant, and applicant is bound by the consequences of those actions or inactions. Link v. Wabash, 370 U.S. 626, 633-34 (1962); Huston v. Ladner, 973 F.2d 1564, 1567, 23 USPQ2d 1910, 1913 (Fed. Cir. 1992); see also Haines v. Quigg, 673 F. Supp. 314, 317, 5 USPQ2d 1130, 1132 (D.N. Ind. 1987). Specifically, petitioner's delay caused by the actions or inactions of his voluntarily chosen representative does not constitute unavoidable delay within the meaning of 35 U.S.C. 133 or 37 CFR 1.137(a). Haines v. Quigg, 673 F. Supp. 314, 5 USPQ2d 1130 (D. Ind. 1987); Smith v. Diamond, 209 USPQ 1091 (D.D.C. 1981); Potter v. Dann, 201 USPQ 574 (D.D.C. 1978); Ex parte Murray, 1891 Dec. Comm'r Pat. 130, 131 (Comm'r Pat. 1891). In re Mattullath, 38 App. D.C. 497, 514-15 (1912)(quoting Ex parte Pratt, 1887 Dec. Comm'r Pat. 31, 32-33 (1887)); see also Winkler v. Ladd, 221 F. Supp. 550, 552, 138 USPQ 666, 167-68 (D.D.C. 1963), aff'd, 143 USPQ 172 (D.C. Cir. 1963); Ex parte Henrich, 1913 Dec. Comm'r Pat. 139, 141 (1913).

Finally, a "delay (in responding) resulting from the lack of knowledge or improper application of the patent statute, rules of practice, or MPEP, [] does not constitute unavoidable delay." MPEP 711.03(c).

An Allegation of Non-receipt

Applicant is further advised that an allegation that an Office action was not received may form the basis for revival of an application based upon unavoidable abandonment. If the

---

counsel's actions, **or their own**, must be held responsible for having noted the MPEP section and Official Gazette notices expressly stating that the certified mailing procedures outlined in 37 CFR 1.8(a) do not apply to continuation applications.) (Emphasis added).

allegation is adequately supported, the petition may be granted and a new Office action mailed. The showing required to establish non-receipt of an Office communication must include:

1. A statement from the Applicant stating that the Office communication was not received by the Applicant and attesting to the fact that a search of the file jacket and docket records indicate that the Office communication was not received.

2. A copy of the file jacket or docket record where the non-received Office communication would have been entered had it been received and docketed must be attached to and referenced in Applicant's statement.

Accordingly, Applicant's assertion, that the Notice was not received, is insufficient to justify granting of the petition. Also, it noted that the Notice was properly mailed to the correspondence address of record. In absence of any irregularity in the mailing of an Office action, there is a strong presumption that the Office action was properly mailed to practitioner at the address of record. This presumption may be overcome by a showing that the Office action was not in fact received. However, the showing outlined above may not be sufficient if there are circumstances that point to a conclusion that the Office communication may have been lost after receipt rather than a conclusion that the Office communication was lost in the mail.

Applicant's Assertion

Applicant asserts that abandonment of the application was unavoidable because Applicant did not receive the Office Communication. Applicant provides that their address changed in November of 2004.

Analysis and conclusion

As to item (3), Applicant has not provided an adequate showing of unavoidable delay. A review of Office records reveals that the correspondence address in the petition differs from the correspondence address of record. Because Applicants changed their correspondence address, but failed to notify this Office,

circumstances point to a conclusion that the Office communication may have been lost after receipt rather than a conclusion that the Office communication was lost in the mail.

As noted above, petitioner has the burden of proof. The decision is based solely on the written, administrative record in existence. The record discloses that Applicant's correspondence address changed prior to the mailing of the Office Communication; however, Applicant failed to notify this Office of said change. As such, Applicant has failed to prove that the delay was unavoidable.

It is also noted that, because the correspondence address in the petition differs from the correspondence address of record, a copy of this decision is being mailed to the address appearing in the petition; however, all future correspondence will be mailed to the correspondence address of record until proper correspondence address change has been filed with the Office.

Applicant is also advised that "[s]ince different matters may be considered by different branches or sections of the United States Patent and Trademark Office, each distinct subject, inquiry or order must be contained in a separate paper to avoid confusion and delay in answering papers dealing with different subjects." Accord 37 CFR 1.4.

Alternate venue

Applicant is strongly urged to file a petition stating that the delay was unintentional. Public Law 97-247, § 3, 96 Stat. 317 (1982), which revised patent and trademark fees, amended 35 U.S.C. § 41(a)(7) to provide for the revival of an "unintentionally" abandoned application without a showing that the delay in was "unavoidable." An "unintentional" petition under 37 CFR 1.137(b) must be accompanied by the required fee, currently $750.00.

The filing of a petition under 37 CFR 1.137(b) cannot be intentionally delayed and therefore must be filed promptly. A person seeking revival due to unintentional delay can not make a statement that the delay was unintentional unless the entire delay, including the delay from the date it was discovered that the application was abandoned until the filing of the petition to revive under 37 CFR 1.137(b), was unintentional. A statement that the delay was unintentional is not appropriate if petitioner intentionally delayed the filing of a petition for revive under 37 CFR 1.137(b).

Further correspondence with respect to this matter should be addressed as follows:

By mail: Commissioner for Patents
PO Box 1450
Alexandria, VA 22313-1450

By FAX: (571) 273-8300
Attn: Office of Petitions

By hand: Customer Service Window
Randolph Building
401 Dulany Street
Alexandria, VA 22314

Telephone inquiries concerning this matter should be directed to the undersigned at (571) 272-3232.

Derek L. Woods
Attorney
Office of Petitions

CC: JOSEPH S. FARZAM, ESQ.
SUITE 960
1875 CENTURY PARK EAST
LOS ANGELES, CA 90067

UNITED STATES PATENT AND TRADEMARK OFFICE

COMMISSIONER FOR PATENTS
UNITED STATES PATENT AND TRADEMARK OFFICE
P.O. BOX 1450
ALEXANDRIA, VA 22313-1450
www.uspto.gov

JOSEPH S. FARZAM, ESQ.
SUITE 1770
1875 CENTURY PARK EAST
LOS ANGELES, CA 90067

COPY MAILED

OCT 16 2006

OFFICE OF PETITIONS

In re Application of	:	
Ardashes Tarpinian	:	
Application No. 10/687,889	:	ON PETITION
Filed: October 20, 2003	:	
Attorney Docket No. N/A	:	

This is a decision on the petition under 37 CFR 1.137(b) filed by facsimile transmission on June 6, 2006 and supplemented on October 10, 2006, to revive the above-identified application.

The application became abandoned for failure to timely reply to the Ex Parte Quayle action mailed March 29, 2005. A Notice of Abandonment was mailed on October 19, 2005.

The petition satisfies the requirements of 37 CFR 1.137(b) in that petitioner has supplied (1) the reply in the form of an amendment to the specification and fifteen (15) pages of replacement drawings containing Figures 1a-7; (2) the petition fee of $750; and (3) an adequate statement of unintentional delay. Therefore, the petition is **GRANTED**.

This application file is being referred to Technology Center Art Unit 2837, for review of the specification and drawings filed on February 28, 2006.

Telephone inquiries concerning this decision should be directed to the undersigned at (571) 272-3226.

Andrea Smith
Petitions Examiner
Office of Petitions