UNITED STATES PATENT AND TRADEMARK OFFICE

Commissioner for Patents
United States Patent and Trademark Office
P.O. Box 1450
Alexandria, VA 22313-1450
www.uspto.gov

FACTOR & LAKE, LTD
1327 W. WASHINGTON BLVD.
SUITE 5G/H
CHICAGO, IL 60607

COPY MAILED

JUL 19 2004

OFFICE OF PETITIONS

In re Application of
Stephen Warren and **Steven Hamilton**
Application No. 10/707,793
Filed: January 13, 2004
Title: METHODS FOR TREATING NEOPLASTIC, ANGIOGENIC, FIBROBLASTIC, AND/OR IMMUNOSUPPRESSIVE OCULAR IRREGULARITIES VIA ADMINISTRATION OF METHOTREXATE BASED MEDICAMENTS, AND OCULAR IONTOPHORETIC DEVICES FOR DELIVERING METHOTREXATE BASED MEDICAMENT

: DECISION GRANTING PETITION
: UNDER 37 CFR 1.47(a)

This is in response to the "Petition Under 37 CFR 1.47(a)," filed June 14, 2004.

The petition is **granted**.

Petitioner has shown that non-signing inventor **Steven Hamilton** has refused to join in the filing of the above-identified application.

The above-identified application and papers have been reviewed and found in compliance with 37 CFR 1.47(a). This application is hereby accorded Rule 1.47(a) status. As provided in Rule 1.47(c), this Office will forward notice of this application's filing to the non-signing inventor at the address given in the Declaration. Notice of the filing of this application will also be published in the Official Gazette.

The file is being forwarded to Technology Center 1600 for examination *in due course*.

Telephone inquiries regarding this decision should be directed to the undersigned at (703) 306-9200.

Edward J. Tannouse
Senior Petitions Attorney
Office of Petitions
United States Patent and Trademark Office

UNITED STATES PATENT AND TRADEMARK OFFICE

Commissioner for Patents
United States Patent and Trademark Office
P.O. Box 1450
Alexandria, VA 22313-1450
www.uspto.gov

STEVEN HAMILTON
1622 PARK PLACE
PARK CITY, UT 84098

COPY MAILED

JUL 19 2004

OFFICE OF PETITIONS

In re Application of
Stephen Warren and Steven Hamilton
Application No. 10/707,793
Filed: January 13, 2004
For: METHODS FOR TREATING NEOPLASTIC, ANGIOGENIC, FIBROBLASTIC, AND/OR IMMUNOSUPPRESSIVE OCULAR IRREGULARITIES VIA ADMINISTRATION OF METHOTREXATE BASED MEDICAMENTS, AND OCULAR IONTOPHORETIC DEVICES FOR DELIVERING METHOTREXATE BASED MEDICAMENT

Dear STEVEN HAMILTON:

You are named as a joint inventor in the above identified United States patent application, filed under the provisions of 35 U.S.C. 116 (United States Code), and 37 CFR 1.47(a), Rules of Practice in Patent Cases. Should a patent be granted on the application you will be designated therein as a joint inventor.

As a named inventor you are entitled to inspect any paper in the file wrapper of the application, order copies of all or any part thereof (at a prepaid cost per 37 CFR 1.19) or make your position of record in the application. Alternatively, you may arrange to do any of the preceding through a registered patent attorney or agent presenting written authorization from you. If you care to join the application, counsel of record (see below) would presumably assist you. Joining in the application would entail the filing of an appropriate oath or declaration by you pursuant to 37 CFR 1.63.

Telephone inquiries regarding this communication should be directed to Petitions Attorney Edward Tannouse at (703)306-9200. Requests for information regarding your application should be directed to the File Information Unit at (703)308-2733. Information regarding how to pay for and order a copy of the application, or a specific paper in the application, should be directed to Certification Division at (703)308-9726 or 1(800) 972-6382 (outside the Washington D.C. area).

Edward J. Tannouse
Petitions Attorney
Office of Petitions
United States Patent and Trademark Office

FACTOR & LAKE, LTD
1327 W. WASHINGTON BLVD.
SUITE 5G/H
CHICAGO, IL 60607

UNITED STATES PATENT AND TRADEMARK OFFICE

Commissioner for Patents
United States Patent and Trademark Office
P.O. Box 1450
Alexandria, VA 22313-1450
www.uspto.gov

FACTOR & LAKE, LTD
1327 W. WASHINGTON BLVD.
SUITE 5G/H
CHICAGO, IL 60607

COPY MAILED

JUL 2 1 2004

OFFICE OF PETITIONS

In re Application of :
Stephen Warren and **Steven Hamilton** :
Application No. 10/707,794 : DECISION GRANTING PETITION
Filed: January 13, 2004 : UNDER 37 CFR 1.47(a)
Title: THE USE OF 5-FLUOROURCIL, DELIVERED BY IONTOPHORESIS AS AN INHIBITOR OF CELL PROLIFERATION IN THE EYE, BULBAR AND PALPEBRAL CONJUNCTIVA, EYELID, PERI-ORBITAL SOFT TISSUES AND SKIN :

This is in response to the "Petition Under 37 CFR 1.47(a)," filed June 14, 2004.

The petition is **granted**.

Petitioner has shown that non-signing inventor **Steven Hamilton** has refused to join in the filing of the above-identified application.

The above-identified application and papers have been reviewed and found in compliance with 37 CFR 1.47(a). This application is hereby accorded Rule 1.47(a) status. As provided in Rule 1.47(c), this Office will forward notice of this application's filing to the non-signing inventor at the address given in the Declaration. Notice of the filing of this application will also be published in the Official Gazette.

The file is being forwarded to Technology Center 1600 for examination *in due course*.

Telephone inquiries regarding this decision should be directed to the undersigned at (703) 306-9200.

Edward J. Tannouse
Senior Petitions Attorney
Office of Petitions
United States Patent and Trademark Office

UNITED STATES PATENT AND TRADEMARK OFFICE

Commissioner for Patents
United States Patent and Trademark Office
P.O. Box 1450
Alexandria, VA 22313-1450
www.uspto.gov

STEVEN HAMILTON
1622 PARK PLACE
PARK CITY, UT 84098

COPY MAILED

JUL 2 1 2004

OFFICE OF PETITIONS

In re Application of
Stephen Warren and Steven Hamilton
Application No. 10/707,794
Filed: January 13, 2004
For: THE USE OF 5-FLUOROURCIL, DELIVERED BY IONTOPHORESIS AS AN INHIBITOR OF CELL PROLIFERATION IN THE EYE, BULBAR AND PALPEBRAL CONJUNCTIVA, EYELID, PERI-ORBITAL SOFT TISSUES AND SKIN

Dear STEVEN HAMILTON:

You are named as a joint inventor in the above identified United States patent application, filed under the provisions of 35 U.S.C. 116 (United States Code), and 37 CFR 1.47(a), Rules of Practice in Patent Cases. Should a patent be granted on the application you will be designated therein as a joint inventor.

As a named inventor you are entitled to inspect any paper in the file wrapper of the application, order copies of all or any part thereof (at a prepaid cost per 37 CFR 1.19) or make your position of record in the application. Alternatively, you may arrange to do any of the preceding through a registered patent attorney or agent presenting written authorization from you. If you care to join the application, counsel of record (see below) would presumably assist you. Joining in the application would entail the filing of an appropriate oath or declaration by you pursuant to 37 CFR 1.63.

Telephone inquiries regarding this communication should be directed to Petitions Attorney Edward Tannouse at (703)306-9200. Requests for information regarding your application should be directed to the File Information Unit at (703)308-2733. Information regarding how to pay for and order a copy of the application, or a specific paper in the application, should be directed to Certification Division at (703)308-9726 or 1(800)972-6382 (outside the Washington D.C. area).

Edward J. Tannouse
Petitions Attorney
Office of Petitions
United States Patent and Trademark Office

FACTOR & LAKE, LTD
1327 W. WASHINGTON BLVD.
SUITE 5G/H
CHICAGO, IL 60607

UNITED STATES PATENT AND TRADEMARK OFFICE

Commissioner for Patents
United States Patent and Trademark Office
P.O. Box 1450
Alexandria, VA 22313-1450
www.uspto.gov

NOVAK DRUCE AND QUIGG LLP (Volvo)
1000 LOUISIANA STREET
FIFTY-THIRD FLOOR
HOUSTON TX 77002

COPY MAILED

SEP 09 2008

OFFICE OF PETITIONS

In re Application of :
Johan Hulten, et al. :
Application No. 10/707,795 : DECISION ON PETITION
Filed: January 13, 2004 :
Attorney Docket No. :
07589.0147.PCUS00

This is a decision on the petition under the unintentional provisions of 37 CFR 1.137(b), filed November 26, 2007, to revive the above-identified application.

The petition is **DISMISSED**.

Any request for reconsideration of this decision must be submitted within TWO (2) MONTHS from the mail date of this decision. Extensions of time under 37 CFR 1.136(a) are permitted. The reconsideration request should include a cover letter entitled "Renewed Petition under 37 CFR 1.137(b)." This is **not** a final agency action within the meaning of 5 U.S.C. § 704.

The application became abandoned for failure to reply in a timely manner to the non-final Office action mailed, June 22, 2004, which set a shortened statutory period for reply of three (3) months. No extensions of time under the provisions of 37 CFR 1.136(a) were obtained. Accordingly, the application became abandoned on September 23, 2004. The Notice of Abandonment was mailed March 11, 2005.

A grantable petition under 37 CFR 1.137(b) must be accompanied by: (1) the required reply, unless previously filed; (2) the petition fee as set forth in 37 CFR 1.17(m); (3) a statement that the entire delay in filing the required reply from the due date for the reply until the filing of a grantable petition pursuant to 37 CFR 1.137(b) was unintentional; and (4) any terminal disclaimer (and fee as set forth in 37 CFR 1.20(d)) required by

37 CFR 1.137(d). Where there is a question as to whether either the abandonment or the delay in filing a petition under 37 CFR 1.137 was unintentional, the Director may require additional information. *See* MPEP 711.03(c)(II)(C) and (D). The instant petition lacks item (3).

There are three periods to be considered during the evaluation of a petition under 37 CFR 1.137(b):

(1) the delay in reply that originally resulted in the abandonment;

(2) the delay in filing an initial petition pursuant to 37 CFR 1.137(b) to revive the application; and

(3) the delay in filing a grantable petition pursuant to 37 CFR 1.137(b) to revive the application.

Currently, the delay has not been shown to the satisfaction of the Director to be unintentional for periods (1) and (2).

As to Period (1):

The patent statute at 35 U.S.C. § 41(a)(7) authorizes the Director to revive an "unintentionally abandoned application." The legislative history of Public Law 97-247 reveals that the purpose of 35 U.S.C. § 41(a)(7) is to permit the Office to have more discretion than in 35 U.S.C. §§ 133 or 151 to revive abandoned applications in appropriate circumstances, but places a limit on this discretion, stating that "[u]nder this section a petition accompanied by either a fee of $500 or a fee of $50 **would not be granted where the abandonment** or the failure to pay the fee for issuing the patent **was intentional** as opposed to being unintentional or unavoidable." [emphasis added]. See H.R. Rep. No. 542, 97th Cong., 2d Sess. 6-7 (1982), *reprinted in* 1982 U.S.C.C.A.N. 770-71. The revival of an intentionally abandoned application is antithetical to the meaning and intent of the statute and regulation.

35 U.S.C. § 41(a)(7) authorizes the Director to accept a petition "for the revival of an unintentionally abandoned application for a patent." As amended December 1, 1997, 37 CFR 1.137(b)(3) provides that a petition under 37 CFR 1.137(b) must be accompanied by a statement that the delay was unintentional, but provides that "[t]he Commissioner may require additional information where there is a question whether the delay was unintentional." Where, as here, there is a question whether the initial delay was unintentional, the petitioner must meet the

burden of establishing that the delay was unintentional within the meaning of 35 U.S.C. § 41(a)(7) and 37 CFR 1.137(b). *See* In re Application of G, 11 USPQ2d 1378, 1380 (Comm'r Pats. 1989); 37 CFR 1.137(b). Here, in view of the inordinate delay (almost 4 years) in resuming prosecution, there is a question whether the entire delay was unintentional. Petitioner should note that the issue is not whether some of the delay was unintentional by any party; rather, the issue is whether the entire delay has been shown to the satisfaction of the Director to be unintentional.

The question under 37 CFR 1.137(b) for period (1) is whether the delay on the part of the party having the right or authority to reply to avoid abandonment (or not reply) was unintentional. Accordingly, any renewed petition must clearly identify the party having the right to reply to avoid abandonment on September 23, 2004. That party, in turn must explain what effort(s) was made to further reply to the outstanding Office action and, further, why no reply was filed. If no effort was made to further reply, then that party must explain why the delay in this application does not result from a deliberate course of action (or inaction). Likewise, as Tracy W. Druce, Esq. was counsel of record at the time of abandonment, Tracy Druce, Esq. should explain why this application became abandoned while it was under their control and what efforts Tracy Druce, Esq. made to further reply of itself and with whom this matter was discussed outside of Tracy Druce, Esq.. Copies of any correspondence relating to the filing, or to not filing a further reply to the outstanding Office action are required from responsible person(s), Tracy Druce, Esq. and whoever else was involved with this application at the time of abandonment. Statements are required from any and all persons then at HOWREY SIMON ARONOLD & WHITE, LLP, and the responsible person(s) having firsthand knowledge of the circumstances surrounding the lack of a reply to the outstanding Office action. As the courts have made clear, it is pointless for the USPTO to revive a long abandoned application without an adequate showing that the delay did not result from a deliberate course of action. *See* Lawman Armor v. Simon, 2005 U.S. Dist. LEXIS 10843, 74 USPQ2d 1633 (DC EMich 2005); Field Hybrids, LLC v. Toyota Motor Corp., 2005 U.S. Dist. LEXIS 1159 (D. Minn Jan. 27, 2005); Lumenyte Int'l Corp. v. Cable Lite Corp., Nos. 96-1011, 96-1077, 1996 U.S. App. LEXIS 16400, 1996 WL 383927 (Fed. Cir. July 9, 1996) (unpublished) (patents held unenforceable due to a finding of inequitable conduct in submitting an inappropriate statement that the abandonment was unintentional).

As to Period (2):

Likewise, where the applicant deliberately chooses not to seek or persist in seeking the revival of an abandoned application, or where the applicant deliberately chooses to delay seeking the revival of an abandoned application, the resulting delay in seeking revival of the abandoned application cannot be considered as "unintentional" within the meaning of 37 CFR 1.137(b). *See* MPEP 711.03(c).

The language of both 35 U.S.C. § 41(a)(7) and 37 CFR 1.137(b) are clear and unambiguous, and, furthermore, without qualification. That is, the delay in filing the reply during prosecution, as well as in filing the petition seeking revival, must have been, without qualification, "unintentional" for the reply to now be accepted on petition. The Office requires that the entire delay be at least unintentional as a prerequisite to revival of an abandoned application to prevent abuse and injury to the public. *See* H.R. Rep. No. 542, 97th Cong., 2d Sess. 7 (1982), reprinted in 1982 U.S.C.C.A.N. 771 ("[i]n order to prevent abuse and injury to the public the Commissioner . . . could require applicants to act promptly after becoming aware of the abandonment"). The December 1997 change to 37 CFR 1.137 did not create any new right to overcome an intentional delay in seeking revival, or in renewing an attempt at seeking revival, of an abandoned application. *See* Changes to Patent Practice and Procedure; Final Rule Notice, 62 Fed. Reg. 53131, 53160 (October 10, 1997), 1203 Off. Gaz. Pat. Office 63, 87 (October 21, 1997), which clearly stated that any protracted delay (here, over 3 years) could trigger, as here, a request for additional information. As the courts have since made clear, a protracted delay in seeking revival, as here, requires a petitioner's detailed explanation seeking to excuse the delay as opposed to USPTO acceptance of a general allegation of unintentional delay. *See* Lawman Armor v. Simon, 2005 U.S. Dist. LEXIS 10843, 74 USPQ2d 1633, at 1637-8 (DC EMich 2005); Field Hybrids, LLC v. Toyota Motor Corp., 2005 U.S. Dist. LEXIS 1159 (D. Minn Jan. 27, 2005) at *21-*23. Statements are required from any and all persons then at HOWREY SIMON ARNOLD & WHITE, LLP and the responsible person(s) having firsthand knowledge of the circumstances surrounding the protracted delay, after the abandonment date, in seeking revival.

As noted in MPEP 711.03(c)(II), subsection D, in instances in which such petition was not filed within 1 year of the date of abandonment of the application, applicants should include:

> (A) the date that the applicant first became aware of the abandonment of the application; and

(B) a showing as to how the delay in discovering the abandoned status of the application occurred despite the exercise of due care or diligence on the part of the applicant.

In either instance, applicant's failure to carry the burden of proof to establish that the "entire" delay was "unavoidable" or "unintentional" may lead to the denial of a petition under 37 CFR 1.137(b), regardless of the circumstances that originally resulted in the abandonment of the application. *See also* New York University v. Autodesk, 2007 U.S. DIST LEXIS, U.S.District LEXIS 50832, *10 -*12 (S.D.N.Y. 2007)(protracted delay in seeking revival undercuts assertion of unintentional delay).

Any renewed petition may be addressed as follows:

By Mail: Mail Stop PETITION
Commissioner for Patents
P. O. Box 1450
Alexandria, VA 22313-1450

By hand: U. S. Patent and Trademark Office
Customer Service Window, Mail Stop Petitions
Randolph Building
401 Dulany Street
Alexandria, VA 22314

The centralized facsimile number is **(571) 273-8300.**

Correspondence regarding this decision may also be filed through the electronic filing system of the USPTO.

To expedite consideration, petitioner may wish to contact the undersigned regarding the filing of the renewed petition under 37 CFR 1.137(b).

Telephone inquiries concerning this decision should be directed to Terri Williams at (571) 272-2991.

Chris Bottorff
Petitions Examiner
Office of Petitions

UNITED STATES PATENT AND TRADEMARK OFFICE

COMMISSIONER FOR PATENTS
UNITED STATES PATENT AND TRADEMARK OFFICE
P.O. BOX 1450
ALEXANDRIA, VA 22313-1450
www.uspto.gov
DIW Jun-06

SCHLUMBERGER OILFIELD SERVICES
200 GILLINGHAM LANE
MD 200-9
SUGAR LAND TX 77478

COPY MAILED
JUN 27 2006
OFFICE OF PETITIONS

In re Application of	:	
Barber et al.	:	
Application No. 10/707,813	:	DECISION ON PETITION
Filed: 14 January, 2004	:	
Atty Docket No. 20.2965	:	

This is a decision on the petition filed on 17 May, 2006, under 37 CFR 1.137(b),[1] to revive the above-identified application.

The petition is **GRANTED**.

The application became abandoned on 8 May, 2006, for failure to timely submit the issue and publication fees as required by the Notice to Allowance and Fee(s) Due mailed on 7 February, 2006, which set a three (3) month statutory period for reply. The filing of the present petition precedes the mailing of Notice of Abandonment.

---

[1] Effective December 1, 1997, the provisions of 37 CFR 1.137(b) now provide that where the delay in reply was unintentional, a petition may be filed to revive an abandoned application or a lapsed patent pursuant to 37 CFR 1.137(b). A grantable petition filed under the provisions of 37 CFR 1.137(b) must be accompanied by:

(1) the required reply, unless previously filed. In a nonprovisional application abandoned for failure to prosecute, the required reply may be met by the filing of a continuing application. In a nonprovisional utility or plant application filed on or after June 8, 1995, and abandoned for failure to prosecute, the required reply may also be met by the filing of a request for continuing examination in compliance with § 1.114. In an application or patent, abandoned or lapsed for failure to pay the issue fee or any portion thereof, the required reply must be the payment of the issue fee or any outstanding balance thereof. In an application, abandoned for failure to pay the publication fee, the required reply must include payment of the publication fee.

(2) the petition fee as set forth in 37 CFR 1.17(m);

(3) a statement that the entire delay in filing the required reply from the due date for the reply until the filing of a grantable petition pursuant to 37 CFR 1.137(b) was unintentional. The Commissioner may required additional information where there is a question whether the delay was unintentional; and

(4) any terminal disclaimer (and fee as set forth in 37 CFR 1.20(d)) required pursuant to 37 CFR 1.137(c)).

This application is being referred to the Publishing Division for processing into a patent.

Telephone inquiries concerning this matter may be directed to the undersigned at (571) 272-3231.

D Wood

Douglas I. Wood
Senior Petitions Attorney
Office of Petitions

UNITED STATES PATENT AND TRADEMARK OFFICE

Commissioner for Patents
United States Patent and Trademark Office
P.O. Box 1450
Alexandria, VA 22313-1450
www.uspto.gov

JUN -9 2004

In re Application of	:	
Mu-Liang Liao et al.	:	
Serial No. 10/707,838	:	DECISION ON PETITION
Filed: January 16, 2004	:	TO WITHDRAW AS ATTORNEY
For: ALL-IN-ONE POLISHING	:	
PROCESS FOR A SEMI-	:	
CONDUCTOR WAFER	:	

By papers filed on May 18, 2004, counsel has petitioned to withdraw as attorney of record in this application.

The petition is GRANTED.

Applicant is advised that the current correspondence address for this application is:

North American International Patent Office
P.O. Box 506
Merrifield, VA 22116

E. Rollins-Cross, Director
Technology Center 3700

UNITED STATES PATENT AND TRADEMARK OFFICE

COMMISSIONER FOR PATENTS
UNITED STATES PATENT AND TRADEMARK OFFICE
P.O. BOX 1450
ALEXANDRIA, VA 22313-1450
www.uspto.gov

COPY MAILED
DEC 10 2008

SHUTTLEWORTH & INGERSOLL, P.L.C.
115 3RD STREET SE, SUITE 500
P.O. BOX 2107
CEDAR RAPIDS IA 52406

In re Application of
Laverne E. Woock
Application No. 10/707,848
Filed: January 16, 2004
Patent No. 6,926,281
Issue Date: August 9, 2005
Attorney Docket No. 11968-1

NOTICE

This is in response to the paper filed November 18, 2008, under 37 CFR 1.28(g)(2) requesting that status as a Small Entity be removed.

In accordance with the request, status as a Small Entity has been removed.

The file does not indicate a change of address has been submitted, although the address given on the petition differs from the address of record. If appropriate, a change of address should be filed in accordance with MPEP 601.03. A courtesy copy of this decision is being mailed to the address given on the petition; however, the Office will mail all future correspondence solely to the address of record.

This file is being forwarded to Files Repository.

Cheryl Gibson-Baylor
Petitions Examiner
Office of Petitions

cc: Laverne Woock
Delta Sports Products, LLC
117 East Kenwood Street
Reinbeck, Iowa 50669

UNITED STATES PATENT AND TRADEMARK OFFICE

COMMISSIONER FOR PATENTS
UNITED STATES PATENT AND TRADEMARK OFFICE
WASHINGTON, DC 20231
www.uspto.gov

NAIPO (NORTH AMERICA INTERNATIONAL PATENT OFFICE)
P.O. BOX 506
MERRIFIELD VA 22116

MAIL

SEP 2 9 2004

DIRECTOR OFFICE
TECHNOLOGY CENTER 2600

In re Application of :
LIN, Tzueng-Yau :
Application No. 10/707,858 : DECISION ON REQUEST TO
Filed: January 19, 2004 : WITHDRAW AS ATTORNEY
For: PROCESSING CIRCUITE CAPABLE OF :
MODIFYING DIGITAL AUDIO SIGNALS :

This is a decision on the request to withdraw as attorney/agent of record filed on May 18, 2004.

A grantable request to withdraw as attorney/agent of record must do the following:
(1) indicate the present mailing address of the attorney(s)/agent(s) who seek(s) to withdraw, and
(2) be signed by each attorney/agent seeking to withdraw or clearly be signed on their behalf, and
(3) be *approved* at least thirty (30) days prior to the maximum extendable period for response to any outstanding Office Action, and
(4) indicate the address to which future correspondence should be mailed.

The Request to Withdraw as Attorney is **DISMISSED AS MOOT**.

Attorney/Agent requesting withdrawal is not of record.

Further communications will be directed to the address listed above until such a time as applicant properly notifies the Patent and Trademark Office of a change of address.

Krista Zele
Special Program Examiner
Technology Center 2600
(703) 305-4701

UNITED STATES PATENT AND TRADEMARK OFFICE

COMMISSIONER FOR PATENTS
UNITED STATES PATENT AND TRADEMARK OFFICE
WASHINGTON, DC 20231
www.uspto.gov

RECEIVED

OCT 7 2004

DIRECTOR OFFICE
TECHNOLOGY CENTER 2600

NAIPO (NORTH AMERICA INTERNATIONAL PATENT OFFICE)
P.O. BOX 506
MERRIFIELD VA 22116

In re Application of :
Yu-Cheng Hsieh, et al. :
Application No. 10/707,872 : DECISION ON REQUEST TO
Filed: January 20, 2004 : WITHDRAW AS ATTORNEY
For: **METHOD FOR SWITCHING A TIME FRAME BASED MOBILE UNIT TO A SLEEP MODE** :

This is a decision on the request to withdraw as attorney/agent of record filed on May 18, 2004.

A grantable request to withdraw as attorney/agent of record must do the following:
(1) indicate the present mailing address of the attorney(s)/agent(s) who seek(s) to withdraw, and
(2) be signed by each attorney/agent seeking to withdraw or clearly be signed on their behalf, and
(3) be *approved* at least thirty (30) days prior to the maximum extendable period for response to any outstanding Office Action, and
(4) indicate the address to which future correspondence should be mailed.

The Request to Withdraw as Attorney is **DISMISSED AS MOOT**.

Attorney/agent requesting withdraw is not of record.

Further communications will be directed to the address listed above until such a time as applicant properly notifies the Patent and Trademark Office of a change of address.

Dwayne Bost
Special Program Examiner
Technology Center 2600
Communications
(703) 305-4778

UNITED STATES PATENT AND TRADEMARK OFFICE

Commissioner for Patents
United States Patent and Trademark Office
P.O. Box 1450
Alexandria, VA 22313-1450
www.uspto.gov

ROBERTO P. BARCALA
11921 SW 7TH STREET
PEMBROKE PINES, FL 33025

COPY MAILED
JAN 31 2006
OFFICE OF PETITIONS

In re Application of :
Roberto Pedro Barcala :
Application No. 10/707,899 : ON PETITION
Filed: January 22, 2004 :
Attorney Docket No. 01141606 :

This is a decision on the petition under 37 CFR 1.137(b), filed November 8, 2005, to revive the above-identified application.

The petition is **DISMISSED.**

Any request for reconsideration of this decision must be submitted within TWO (2) MONTHS from the mail date of this decision. Extensions of time under 37 CFR 1.136(a) are permitted. The reconsideration request should include a cover letter entitled "Renewed Petition under 37 CFR 1.137(b)." This is **not** a final agency action within the meaning of 5 U.S.C. § 704.

A grantable petition under 37 CFR 1.137(b) must be accompanied by: (1) the required reply, unless previously filed; (2) the petition fee as set forth in 37 CFR 1.17(m); (3) a statement that the entire delay in filing the required reply from the due date for the reply until the filing of a grantable petition pursuant to 37 CFR 1.137(b) was unintentional; and (4) any terminal disclaimer (and fee as set forth in 37 CFR 1.20(d)) required by 37 CFR 1.137(d). Where there is a question as to whether either the abandonment or the delay in filing a petition under 37 CFR 1.137 was unintentional, the Commissioner may require additional information. See MPEP 711.03(c)(III)(C) and (D). The instant petition lacks item(s) 2.

It is noted that petitioner has tendered the small entity amount for the petition fee. However, there is nothing in USPTO records indicating that the application is entitled to small entity status. Therefore, the remaining balance of $750 for the petition fee is due. An attempt was made to charge petition fee to said account, but the deposit account is inactive. This application cannot be revived until the required item is submitted. If the application is, in fact, entitled to small entity status, petitioner should comply with 37 CFR § 1.27.

It is not apparent whether the person signing the statement of unintentional delay was in a position to have firsthand or direct knowledge of the facts and circumstances of the delay at issue. Nevertheless, such statement is being treated as having been made as the result of a reasonable inquiry into the facts and circumstances of such delay. See 37 CFR 10.18(b) and Changes to Patent Practice and Procedure; Final Rule Notice, 62 Fed. Reg. 53131, 53178 (October 10, 1997), 1203 Off. Gaz. Pat. Office 63, 103 (October 21, 1997). In the event that such an inquiry has not been made, petitioner must make such an inquiry. If such inquiry results in the discovery that it is not correct that the entire delay in filing the required reply from the due date for the reply until the filing of a grantable petition pursuant to 37 CFR 1.137(b) was unintentional, petitioner must notify the Office.

There is no indication that the person signing the instant petition was ever given a power of attorney or authorization of agent to prosecute the above-identified application. If the person signing the instant petition desires to receive future correspondence regarding this application, the appropriate power of attorney or authorization of agent must be submitted. While a courtesy copy of this decision is being mailed to the person signing the instant petition, all future correspondence will be directed to the address currently of record until such time as appropriate instructions are received to the contrary.

Further correspondence with respect to this matter should be addressed as follows:

By mail: Mail Stop PETITIONS
Commissioner for Patents
Post Office Box 1450
Alexandria, VA 22313-1450

By hand: Customer Service Window
Mail Stop Petitions
Randolph Building
401 Dulany Street
Alexandria, VA 22314

By fax: (571) 273-8300
ATTN: Office of Petitions

Telephone inquiries concerning this decision should be directed to the undersigned at (571) 272-3229.

Retta Williams

Retta Williams
Petitions Examiner
Office of Petitions

cc: John H. Faro, Esq.
Faro & Associates
P. O. Box 4904
Key Biscayne, FL 33149-4904

UNITED STATES PATENT AND TRADEMARK OFFICE

Commissioner for Patents
United States Patent and Trademark Office
P.O. Box 1450
Alexandria, VA 22313-1450
www.uspto.gov

JOHN H. FARO, ESQ.
FARO & ASSOCIATES
44 WEST FLAGLER STREET
SUITE 1100
MIAMI, FL 33130-1808

COPY MAILED

MAR 2 0 2006

OFFICE OF PETITIONS

In re Application of :
Roberto Pedro Barcala :
Application No. 10/707,899 : ON PETITION
Filed: January 22, 2004 :
Attorney Docket No. 01141606 :

This is a decision on the renewed petition under 37 CFR 1.137(b), filed February 24, 2006, to revive the above-identified application.

The petition is **GRANTED.**

The above-identified application became abandoned for failure to reply in a timely manner to the non-final Office action mailed August 30, 2004, which set a shortened statutory period for reply of three (3) months. No extensions of time under the provisions of 37 CFR 1.136(a) were obtained. Accordingly, the application became abandoned at midnight on November 30, 2004.

The statement claiming small entity status in accordance with 37 CFR 1.27 submitted with the instant petition under 37 CFR 1.137(b) has been made of record and small entity status has been accorded.

The Power of Attorney and Change of Correspondence Address has been accepted and recorded.

The petition satisfies the requirement of 37 CFR 1.137 (b) in that petitioner has supplied (1) the reply in the form of an Amendment; (2) the petition fee of $750; and (3) the required statement of unintentional delay have been received. Accordingly, the petition filed February 24, 2006 is accepted as having been unintentionally delayed.

Telephone inquiries concerning this decision should be directed to the undersigned at (571) 272-3229.

The application matter is being referred to Technology Center 3700, Art Unit 3724 for further processing.

Retta Williams

Retta Williams
Petitions Examiner
Office of Petitions

UNITED STATES PATENT AND TRADEMARK OFFICE

Commissioner for Patents
United States Patent and Trademark Office
P.O. Box 1450
Alexandria, VA 22313-1450
www.uspto.gov

JJGJR.: 08-05

Paper No: __

FOSTER, SWIFT,
COLLINS & SMITH, P.C.
313 SOUTH WASHINGTON SQUARE
LANSING MI 48933

COPY MAILED

AUG 1 1 2005

OFFICE OF PETITIONS

In re Application of
Jewell, et al.
Application No. 10/707,906
Filed: 23 January, 2004
Attorney Docket No. 22864-00002

ON PETITION

This is a decision on the renewed petition filed on 25 July, 2005, to revive the above-identified application under 37 C.F.R. §1.137(b) as abandoned due to unintentional delay.

For the reasons set forth below, the petition under 37 C.F.R. §1.137(b) is **GRANTED**.

NOTE: **There is no indication that Petitioner herein was ever empowered to prosecute the instant application. If Petitioner desires to receive future correspondence regarding this application, the appropriate power of attorney documentation must be submitted. A courtesy copy of this decision will be mailed to Petitioner. However, all future correspondence will be directed to the address of record until such time as appropriate instructions are received to the contrary.**

BACKGROUND

The record reflects that:

- Petitioner failed to reply timely and properly to Notice of Allowance and Fees Due

mailed on 26 January, 2005, with reply due under a non-extendable deadline on or before 26 April, 2005;

- the application went abandoned by operation of law after midnight 26 April, 2005;
- the Office mailed the Notice of Abandonment on 8 July, 2005;
- with the instant petition with fee, Petitioner filed the Issue and Publication fees, as the reply, and made the statement of unintentional delay.

STATUTES, REGULATIONS AND ANALYSIS

Congress has authorized the Commissioner to "revive an application if the delay is shown to the satisfaction of the Commissioner to have been "unavoidable." 35 U.S.C. §133 (1994).[1]

The regulations at 37 C.F.R. §1.137(a) and (b) set forth the requirements for a petitioner to revive a previously unavoidably or unintentionally, respectively, abandoned application under this congressional grant of authority.

The language of 35 U.S.C. §133 and 37 C.F.R. §1.137(a) is clear, unambiguous, and without qualification: the delay in tendering the reply to the outstanding Office action, as well as filing the first petition seeking revival, must have been unavoidable for the reply now to be accepted on petition.[2] Delays in responding properly raise the question whether delays are unavoidable.[3] Where there is a question whether the delay was unavoidable, Petitioners must meet the burden of establishing that the delay was unavoidable within the meaning of 35 U.S.C. §133 and 37 C.F.R. §1.137(a).[4]

---

[1] 35 U.S.C. §133 provides:

35 U.S.C. §133 Time for prosecuting application.

Upon failure of the applicant to prosecute the application within six months after any action therein, of which notice has been given or mailed to the applicant, or within such shorter time, not less than thirty days, as fixed by the Commissioner in such action, the application shall be regarded as abandoned by the parties thereto, unless it be shown to the satisfaction of the Commissioner that such delay was unavoidable.

[2] Therefore, by example, an unavoidable delay in the payment of the Filing Fee might occur if a reply is shipped by the US Postal Service, but due to catastrophic accident, the delivery is not made.

[3] See: *Changes to Patent Practice and Procedure; Final Rule Notice*, 62 *Fed. Reg.* at 53158-59 (October 10, 1997), 1203 *Off. Gaz. Pat. Office* at 86-87 (October 21, 1997).

[4] See: In re Application of G, 11 USPQ2d 1378, 1380 (Comm'r Pats. 1989).

And the Petitioner must be diligent in attending to the matter.[5] Failure to do so does not constitute the care required under Pratt, and so cannot satisfy the test for diligence and due care. By contrast, unintentional delays are those that do not satisfy the very strict statutory and regulatory requirements of unavoidable delay, and also, by definition, are not intentional.

The requirements for a grantable petition under 37 C.F.R. §1.137(b) are the petition and fee, the statement (and possibly a showing) of unintentional delay, a proper reply, and–where appropriate--a terminal disclaimer and fee if the application was filed before 8 June, 1995.

Petitioner has satisfied the requirements of 37 C.F.R.§1.137(b).

CONCLUSION

Accordingly, the instant petition under 37 C.F.R. §1.137(b) hereby is **granted**.

The instant application is released to Publications Branch to be processed into a patent in due course.

Telephone inquiries concerning this decision may be directed to the undersigned at (571) 272-3214.

John J. Gillon, Jr.
Senior Attorney
Office of Petitions

cc:
EGGERTON CAMPBELL
7009 Sulky Ln
North Bethesda, MD 20852 (Per registration with OED)

EGGERTON CAMPBELL
1901 L Street/Ste. 800
Washington, DC 20036 (Per petition)

---

[5] See: Diligence in Filing Petitions to Revive and Petitions to Withdraw the Holding of Abandonment, 1124 Off. Gaz. Pat. Office 33 (March 19, 1991). It was and is Petitioner's burden to exercise diligence in seeking either to have the holding of abandonment withdrawn or the application revived. See 1124 Off. Gaz. Pat. Office supra.

UNITED STATES PATENT AND TRADEMARK OFFICE

Commissioner for Patents
United States Patent and Trademark Office
P.O. Box 1450
Alexandria, VA 22313-1450
www.uspto.gov

JUL 20 2004

DCM

In re Application of Donald H. Wiseman Serial Number: 10/707,909 Filed: January 23, 2004 For: CRYSTAL GROWER WITH INTEGRATED LITZ COIL	: : : : : : :	PETITION UNDER M.P.E.P.708.02 VI

This is in response to the petition filed March 1, 2004, requesting that the above-identified application be granted Special Status under Section 708.02 VI of the MPEP and 37 CFR 1.102(c) **(no fee required)**.

The request for Special Status considered under Section 708.02 VI is granted because criteria under 37 CFR 1.102(c) has been met.

Accordingly the petition is **GRANTED.**

Marian C. Knode

Marian C. Knode, Special Programs Examiner
Technology Center 1700
Chemical and Materials Engineering

ZIOLKOWSKI PATENT SOLUTIONS GROUP, LLC (ZPS)
14135 NORTH CEDARBURG ROAD
MEQUON WI 53097

UNITED STATES PATENT AND TRADEMARK OFFICE

Commissioner for Patents
United States Patent and Trademark Office
P.O. Box 1450
Alexandria, VA 22313-1450
www.uspto.gov

ZIOLKOWSKI PATENT SOLUTIONS GROUP, SC (ZPS)
14135 NORTH CEDARBURG ROAD
MEQUON, WI 53097

COPY MAILED

MAR 16 2006

OFFICE OF PETITIONS

In re Application of Wiseman :
Application No. 10/707,909 : Decision on Petition
Filing Date: January 23, 2004 :
Attorney Docket No. PIL8015.011 :

This is a decision on the petition under 37 CFR 1.181, filed January 25, 2006, to withdraw the holding of abandonment.

The petition is **granted.**

The above-identified application was deemed abandoned as a result of a failure to receive an appeal brief (and fee required by 37 CFR 1.17(c)) within the time period provided in 37 CFR 1.192(a). As an appeal brief (and appeal brief fee) was not filed within two (2) months of the Notice of Appeal filed June 15, 2005, and no extensions of time under the provisions of 37 CFR 1.136(b) were obtained, the appeal was dismissed and the proceedings as to the rejected claims were terminated. See 37 CFR 1.192(b) & 1.197(c). As no claim was allowed, the-above-identified application was deemed abandoned as of August 16, 2005. See MPEP 1215.04. A Notice of Abandonment was mailed on January 20, 2006.

Petitioner has provided a showing in compliance with 37 CFR 1.8(b) demonstrating an appeal brief was timely filed. Therefore, the Notice of Abandonment is hereby vacated and the holding of abandonment withdrawn.

Technology Center Art Unit 1722 will be informed of the instant decision so that the examiner may consider the appeal brief in due course.

Telephone inquiries regarding this communication should be directed to Petitions Attorney Steven Brantley at (571) 272-3203.

Charles Steven Brantley
Senior Petitions Attorney
Office of Petitions

UNITED STATES PATENT AND TRADEMARK OFFICE

UNITED STATES DEPARTMENT OF COMMERCE
United States Patent and Trademark Office
Address: COMMISSIONER FOR PATENTS
P.O. Box 1450
Alexandria, Virginia 22313-1450
www.uspto.gov

ZIOLKOWSKI PATENT SOLUTIONS GROUP, SC (ZPS)
136 S WISCONSIN ST
PORT WASHINGTON, WI 53074

Mail Date: 04/20/2010

Applicant	: Donald H. Wiseman	: DECISION ON REQUEST FOR
Patent Number	: 7632350	: RECALCULATION of PATENT
Issue Date	: 12/15/2009	: TERM ADJUSTMENT IN VIEW
Appliction No	: 10/707,909	: OF WYETH AND NOTICE OF INTENT TO
Filed	: 01/23/2004	: ISSUE CERTIFICATE OF CORRECTION
		:

The Request for Recalculation is **GRANTED** to the extent indicated.

The patent term adjustment has been determined to be **1449** days. The USPTO will *sua sponte* issue a certificate of correction reflecting the amount of PTA days determined by the recalculation.

Prior to the issuance of the certificate of correction, the USPTO will afford patentee an opportunity to be heard and request reconsideration. Accordingly, patentee has **one month or thirty (30) days**, whichever is longer, to file a request for reconsideration of this patent term adjustment calculation. See 35 U.S.C. 154(b)(3)(B)(ii) and 37 CFR 1.322(a)(4). No extensions of time will be granted under 37 CFR 1.136.

Patentee should use document code PET.OP if electronically filing a request for reconsideration of this patent term adjustment calculation. The patentee must also include the information required by 37 CFR 1.705(b)(2) and the fee required by 37 CFR 1.18(e). If patentee does not file a timely request for reconsideration of this patent term adjustment calculation including the information required by 37 CFR 1.705(b)(2) and the fee required by 37 CFR 1.18(e), the USPTO will issue a certificate of correction reflecting the PTA determination noted above.

Patentee should be aware that in order to preserve the right to review in the United States District Court for the District of Columbia of the USPTO patent term adjustment determination, patentee must ensure that he or she also take the steps required under 35 U.S.C. 154(b)(4)(A) in a timely manner. Nothing in the request for recalculation should be construed as providing an alternative time frame for commencing a civil action under 35 U.S.C. 154(b)(4)(A).

Any questions concerning this decision should be directed to the Office of Patent Legal Administration at 571-272-7702.

UNITED STATES PATENT AND TRADEMARK OFFICE

Commissioner for Patents
United States Patent and Trademark Office
P.O. Box 1450
Alexandria, VA 22313-1450
www.uspto.gov

BROOKS KUSHMAN P.C. / LEAR CORPORATION
1000 TOWN CENTER
TWENTY-SECOND FLOOR
SOUTHFIELD, MI 48075-1238

COPY MAILED

NOV 14 2007

OFFICE OF PETITIONS

In re Application of
Carles BORREGO BEL et al.
Application No. 10/707,922
Filed: January 26, 2004
Attorney Docket No. 8136ES

: DECISION ON PETITION
: UNDER 37 CFR 1.78(a)(3)

This is a decision on the petition under 37 CFR 1.78(a)(3), filed October 29, 2007, to accept an unintentionally delayed claim under 35 U.S.C. § 120 and 365(c) for the benefit of priority to prior-filed PCT Application No. PCT/ES02/00373, filed July 24, 2002, set forth in the accompanying amendment to the specification.

The petition under 37 CFR 1.78(a)(3) is **GRANTED.**

A petition for acceptance of a claim for late priority under 37 CFR 1.78(a)(3) is only applicable to those applications filed on or after November 29, 2000. Further, the petition is appropriate only after the expiration of the period specified in 37 CFR 1.78(a)(2)(ii). In addition, the petition under 37 CFR 1.78(a)(3) must be accompanied by:

(1) the reference required by 35 U.S.C. § 120 and 37 CFR 1.78(a)(2)(i) of the prior-filed application, unless previously submitted;
(2) the surcharge set forth in § 1.17(t); and
(3) a statement that the entire delay between the date the claim was due under 37 CFR 1.78(a)(2)(ii) and the date the claim was filed was unintentional. The Commissioner may require additional information where there is a question whether the delay was unintentional.

All the above requirements having been satisfied, the late claim for priority under 35 U.S.C. § 120 and 365(c) is accepted as being unintentionally delayed.

The granting of the petition to accept the delayed benefit claim to the prior-filed application under 37 CFR 1.78(a)(3) should not be construed as meaning that the application is entitled to the benefit of the prior-filed application. In order for the application to be entitled to the benefit of the prior-filed application, all other requirements under 35 U.S.C. §§ 120 and

365(c) and 37 CFR 1.78(a)(1) and (a)(2) must be met. Similarly, the fact that the corrected Filing Receipt accompanying this decision on petition includes the prior-filed application should not be construed as meaning that applicant is entitled to the claim for benefit of priority to the prior-filed application noted thereon. Accordingly, the examiner will, in due course, consider this benefit claim and determine whether the application is entitled to the benefit of the earlier filing date.

A corrected Filing Receipt, which includes the priority claim to the prior-filed application, accompanies this decision on petition.

Any inquiries concerning this decision may be directed to David Bucci at (571) 272-7099. All other inquiries concerning either the examination procedures or status of the application should be directed to the Technology Center.

This application is being forwarded to the examiner of Technology Center Art Unit 2836 for appropriate action on the amendment filed October 29, 2007, including consideration of applicant's entitlement to claim benefit of priority under 35 U.S.C. § 120 and 365(c) to the above-noted, prior-filed PCT application.

David Bucci
Petitions Examiner
Office of Petitions

ATTACHMENT: Corrected Filing Receipt

UNITED STATES PATENT AND TRADEMARK OFFICE

UNITED STATES DEPARTMENT OF COMMERCE
United States Patent and Trademark Office
Address: COMMISSIONER FOR PATENTS
P.O. Box 1450
Alexandria, Virginia 22313-1450
www.uspto.gov

APPLICATION NUMBER	FILING or 371(c) DATE	GRP ART UNIT	FIL FEE REC'D	ATTY.DOCKET.NO	TOT CLAIMS	IND CLAIMS
10/707,922	01/26/2004	2836	900	8136ES	11	2

CONFIRMATION NO. 1921

CORRECTED FILING RECEIPT

34007
BROOKS KUSHMAN P.C. / LEAR CORPORATION
1000 TOWN CENTER
TWENTY-SECOND FLOOR
SOUTHFIELD, MI 48075-1238

Date Mailed: 11/14/2007

Receipt is acknowledged of this non-provisional patent application. The application will be taken up for examination in due course. Applicant will be notified as to the results of the examination. Any correspondence concerning the application must include the following identification information: the U.S. APPLICATION NUMBER, FILING DATE, NAME OF APPLICANT, and TITLE OF INVENTION. Fees transmitted by check or draft are subject to collection. Please verify the accuracy of the data presented on this receipt. **If an error is noted on this Filing Receipt, please write to the Office of Initial Patent Examination's Filing Receipt Corrections. Please provide a copy of this Filing Receipt with the changes noted thereon. If you received a "Notice to File Missing Parts" for this application, please submit any corrections to this Filing Receipt with your reply to the Notice. When the USPTO processes the reply to the Notice, the USPTO will generate another Filing Receipt incorporating the requested corrections**

Applicant(s)

Carles Borrego Bel, Tarragon Valls, SPAIN;
Joan Fontanilles Pinas, Tarragon Valls, SPAIN;
Gabriel Figuerola Barrutet, Tarragon Valls, SPAIN;

Assignment For Published Patent Application

LEAR CORPORATION, Southfield, MI

Power of Attorney: The patent practitioners associated with Customer Number 34007

Domestic Priority data as claimed by applicant

This application is a CON of PCT/ES02/00373 07/24/2002

Foreign Applications

If Required, Foreign Filing License Granted: 03/23/2004

The country code and number of your priority application, to be used for filing abroad under the Paris Convention, is **US 10/707,922**

Projected Publication Date: Not Applicable

Non-Publication Request: No

Early Publication Request: No

Title

Electrical Distribution System and Method for a Vehicle with Two Networks Having Different Voltage Levels

Preliminary Class

307

PROTECTING YOUR INVENTION OUTSIDE THE UNITED STATES

Since the rights granted by a U.S. patent extend only throughout the territory of the United States and have no effect in a foreign country, an inventor who wishes patent protection in another country must apply for a patent in a specific country or in regional patent offices. Applicants may wish to consider the filing of an international application under the Patent Cooperation Treaty (PCT). An international (PCT) application generally has the same effect as a regular national patent application in each PCT-member country. The PCT process **simplifies** the filing of patent applications on the same invention in member countries, but **does not result** in a grant of "an international patent" and does not eliminate the need of applicants to file additional documents and fees in countries where patent protection is desired.

Almost every country has its own patent law, and a person desiring a patent in a particular country must make an application for patent in that country in accordance with its particular laws. Since the laws of many countries differ in various respects from the patent law of the United States, applicants are advised to seek guidance from specific foreign countries to ensure that patent rights are not lost prematurely.

Applicants also are advised that in the case of inventions made in the United States, the Director of the USPTO must issue a license before applicants can apply for a patent in a foreign country. The filing of a U.S. patent application serves as a request for a foreign filing license. The application's filing receipt contains further information and guidance as to the status of applicant's license for foreign filing.

Applicants may wish to consult the USPTO booklet, "General Information Concerning Patents" (specifically, the section entitled "Treaties and Foreign Patents") for more information on timeframes and deadlines for filing foreign patent applications. The guide is available either by contacting the USPTO Contact Center at 800-786-9199, or it can be viewed on the USPTO website at http://www.uspto.gov/web/offices/pac/doc/general/index.html.

For information on preventing theft of your intellectual property (patents, trademarks and copyrights), you may wish to consult the U.S. Government website, http://www.stopfakes.gov. Part of a Department of Commerce initiative, this website includes self-help "toolkits" giving innovators guidance on how to protect intellectual property in specific countries such as China, Korea and Mexico. For questions regarding patent enforcement issues, applicants may call the U.S. Government hotline at 1-866-999-HALT (1-866-999-4158).

LICENSE FOR FOREIGN FILING UNDER

Title 35, United States Code, Section 184

Title 37, Code of Federal Regulations, 5.11 & 5.15

GRANTED

The applicant has been granted a license under 35 U.S.C. 184, if the phrase "IF REQUIRED, FOREIGN FILING LICENSE GRANTED" followed by a date appears on this form. Such licenses are issued in all applications where

the conditions for issuance of a license have been met, regardless of whether or not a license may be required as set forth in 37 CFR 5.15. The scope and limitations of this license are set forth in 37 CFR 5.15(a) unless an earlier license has been issued under 37 CFR 5.15(b). The license is subject to revocation upon written notification. The date indicated is the effective date of the license, unless an earlier license of similar scope has been granted under 37 CFR 5.13 or 5.14.

This license is to be retained by the licensee and may be used at any time on or after the effective date thereof unless it is revoked. This license is automatically transferred to any related applications(s) filed under 37 CFR 1.53(d). This license is not retroactive.

The grant of a license does not in any way lessen the responsibility of a licensee for the security of the subject matter as imposed by any Government contract or the provisions of existing laws relating to espionage and the national security or the export of technical data. Licensees should apprise themselves of current regulations especially with respect to certain countries, of other agencies, particularly the Office of Defense Trade Controls, Department of State (with respect to Arms, Munitions and Implements of War (22 CFR 121-128)); the Bureau of Industry and Security, Department of Commerce (15 CFR parts 730-774); the Office of Foreign AssetsControl, Department of Treasury (31 CFR Parts 500+) and the Department of Energy.

NOT GRANTED

No license under 35 U.S.C. 184 has been granted at this time, if the phrase "IF REQUIRED, FOREIGN FILING LICENSE GRANTED" DOES NOT appear on this form. Applicant may still petition for a license under 37 CFR 5.12, if a license is desired before the expiration of 6 months from the filing date of the application. If 6 months has lapsed from the filing date of this application and the licensee has not received any indication of a secrecy order under 35 U.S.C. 181, the licensee may foreign file the application pursuant to 37 CFR 5.15(b).

UNITED STATES PATENT AND TRADEMARK OFFICE

Commissioner for Patents
United States Patent and Trademark Office
P.O. Box 1450
Alexandria, VA 22313-1450
www.uspto.gov

Paper No. 080504

NAIPO (NORTH AMERICA INTERNATIONAL PATENT OFFICE)
P.O. Box 506
Merrifield, VA 22116

AUG 16 2004

In re Application of:	:	
WEI-CHIH et al.	:	
Serial No.: 10/707,931	:	DECISION ON REQUEST TO WITHDRAW
Filed: January 26, 2004	:	FROM RECORD
Attorney Docket No.: **ADTP0103USA0**	:	

This is a decision on the request to withdraw as attorney/agent of record under 37 C.F.R. § 1.36, filed May 18, 2004.

A grantable request to withdraw as attorney of record must be signed by every attorney seeking to withdraw or contain a clear indication that one attorney is signing on behalf of others. A request to withdraw will not be approved unless at least thirty (30) days would remain between the date of approval and the later of the expiration date of a time to file a response or the expiration date of the maximum time period, which can be extended under 37 C.F.R. § 1.136(a).

The request meets all the above stated requirements. The request was signed by Mord Michael Lewis on behalf of himself.

The request is **APPROVED**.

Winston Hsu remains as attorney of record at this time.

All future communications from the Office will continue to be directed to the above address until otherwise notified by applicant.

Inquiries related to this decision should be directed to Lissi Marquis at (571) 272-1596.

Lissi Marquis, Special Programs Examiner
Technology Center 2800
Semiconductors, Electrical and Optical
Systems and Components

UNITED STATES PATENT AND TRADEMARK OFFICE

Commissioner for Patents
United States Patent and Trademark Office
P.O. Box 1450
Alexandria, VA 22313-1450
www.uspto.gov

Paper No. 080504

NAIPO (NORTH AMERICA INTERNATIONAL PATENT OFFICE)
P.O. Box 506
Merrifield, VA 22116

AUG 16 2004

In re Application of:
CHIH-HUNG SU et al.
Serial No.: 10/707,933
Filed: January 26, 2004
Attorney Docket No.: **ADTP0105SA0**

DECISION ON REQUEST TO WITHDRAW FROM RECORD

This is a decision on the request to withdraw as attorney of record under 37 C.F.R. § 1.36, filed May 18, 2004.

The request is **DISMISSED.**

The attorney/agent requesting withdrawal is not of record in the above-identified application. As such, the request must be dismissed.

Winston Hsu remains as attorney of record at this time.

All future communications from the Office will continue to be directed to the above address until otherwise notified by applicant.

Inquiries related to this decision should be directed to Lissi Marquis at (571) 272-1596.

Lissi Marquis, Special Programs Examiner
Technology Center 2800
Semiconductors, Electrical and Optical
Systems and Components

UNITED STATES PATENT AND TRADEMARK OFFICE

Commissioner for Patents
United States Patent and Trademark Office
P.O. Box 1450
Alexandria, VA 22313-1450
www.uspto.gov

BLACKWELL SANDERS PEPER MARTIN LLP
720 OLIVE STREET
SUITE 2400
ST. LOUIS, MO 63101

COPY MAILED

DEC 20 2004

OFFICE OF PETITIONS

In re Application of	:	
Horst Eger et al	:	
Application No. 10/707,959	:	DECISION GRANTING PETITION
Filed: January 28, 2004	:	UNDER 37 CFR 1.182
Attorney Docket No. 717119.481	:	

This is a decision on the petition under 37 CFR 1.182, filed April 2, 2004, to change the order of inventorship in the above-identified application.

The petition is **granted**.

A corrected Filing Receipt with the desired order of inventorship accompanies this decision on petition.

This matter is being referred to Technology Center AU 2621 for examination in due course.

Frances Hicks
Petitions Examiner
Office of Petitions
Office of the Deputy Commissioner
for Patent Examination Policy

Enclosure: Corrected Filing Receipt

UNITED STATES PATENT AND TRADEMARK OFFICE

Commissioner for Patents
United States Patent and Trademark Office
P.O. Box 1450
Alexandria, VA 22313-1450
www.uspto.gov

MAILED

APR 20 2007

Technology Center 2100

Anthony Canale
IBM MICROELECTRONICS
INTELLECTUAL PROPERTY LAW
1000 River Street, 972E
Essex Junction, VT 05452

In re Application of:
Dominique P. BONNEAU, et al
Appl. No.: 10/707,961
Filed: January 28, 2004
For: SERIALIZER/DESERIALIZER CIRCUIT FOR JITTER SENSITIVITY CHARACTERIZATION

DECISION ON PETITION
UNDER 37 CFR § 1.59

This is a decision on the petition under 37 CFR § 1.59(b), filed December 1, 2006, to expunge information unintentionally submitted in papers filed October 06, 2006.

The petition is **GRANTED**.

Petitioner requests that the documents entitled as "Information Disclosure Statement (IDS) Filed, Preliminary Amendment, Specification, Claims, Applicant Arguments/Remarks Made in an Amendment, Miscellaneous Incoming Letter, Fee Worksheet (PTO-875), Status Letter Mailed to Applicant, Specification, Claims, Abstract, Formal Drawings and Oath or Declaration filed" and dealing with application material for a divisional application of application serial no. 10/707,961 which were incorrectly filed as material in application serial no. 10/707,961 rather than in a new application, all of which were filed on October 06, 2006, be expunged from the record. Petitioner states that the documents were unintentionally submitted and the failure to obtain their return would cause irreparable harm to the party in interest on whose behalf the information was submitted. The petition fee set forth in 37 CFR § 1.17(g) has been paid.

The information in question has been determined by the undersigned to not be material to the examination of the instant application.

Applicant is required to retain the expunged material(s) for the life of any patent which issues on the above-identified application.

The expunged material has been closed from public view and will not be returned to applicant.

Any inquiry concerning this decision should be directed to Brian Johnson whose telephone number is (571) 272-3595.

James Dwyer for JH

Jack Harvey
Director
Technology Center 2100
Computer Architecture, Software, and
Information Security

SPE RESPONSE FOR CERTIFICATE OF CORRECTION

Paper No.: _____

DATE : 3/4/08

TO SPE OF : ART UNIT 2826

SUBJECT : Request for Certificate of Correction on Patent No.: 7224029 B2

A response is requested with respect to the accompanying request for a certificate of correction.

Please complete this form and return with file, within 7 days to:
Palm location **7580, Certificates of Correction Branch – South Tower – 9A22**
If response is for an IFW, **return to employee (named below) via PUBSCofC Team in MADRAS.**
With respect to the change(s) requested, correcting Office and/or Applicant's errors, should the patent read as shown in the certificate of correction (COCIN)? No new matter should be introduced, nor should the scope or meaning of the claims be changed.

Valerie Jackson

Thank You For Your Assistance

Certificates of Correction Branch
Tel. No. 703-308-9390 ext. 114

The request for issuing the above-identified correction(s) is hereby:
Note your decision on the appropriate box.

- ☒ **Approved** — All changes apply.
- ☐ **Approved in Part** — Specify below which changes **do not** apply.
- ☐ **Denied** — State the reasons for denial below.

Comments:

Sue Purvis — SPE

2826 — Art Unit

25 JUN 2004

UNITED STATES PATENT AND TRADEMARK OFFICE

COMMISSIONER FOR PATENTS
UNITED STATES PATENT AND TRADEMARK OFFICE
P.O. BOX 1450
ALEXANDRIA, VA 22313-1450
www.uspto.gov

HORIZON IP PTE LTD
166 KALLANG WAY
6TH FLOOR
SINGAPORE 349249, SINGAPORE

In re Application of MANGELINCK :
U.S. Application No.: 10/707,968 :
PCT Application No.: PCT/SG02/00174 : DECISION
Int. Filing Date: 31 July 2002 :
Priority Date Claimed: 31 July 2001 :
Attorney Docket No.: ASTAP2004-01 :
For: GATE ELECTRODES AND THE FORMATION THEREOF :

This is in response to applicant's "Petition to Convert and Application Which Was Filed Under 35 U.S.C. § 111(A) to a National Application Filed Under 35 U.S.C. § 371" filed 26 May 2004.

BACKGROUND

On 31 July 2002, applicant filed international application PCT/SG02/00174, which claimed priority of an earlier Singapore application filed 31 July 2001. A copy of the international application was communicated to the USPTO from the International Bureau on 13 February 2003. The thirty-month period for paying the basic national fee in the United States expired on 31 January 2004.

On 29 January 2004, applicant filed application papers in the USPTO via the Electronic Filing System (EFS).

On 26 May 2004, applicant filed the present petition under 37 CFR 1.182.

DISCUSSION

The petition states that the 29 January 2004 filing was intended to be a national stage application under 35 U.S.C. 371. However, it is not yet possible to file a national stage application under 35 U.S.C. 371 via EFS.

The information on the USPTO's internet site states,

> At this time EFS does not provi[d]e all the capabilities needed to author, submit and initially process electronic documents and attachments required for a complete 35 U.S.C. 371 National stage filing. A future release of EFS software will provide the software capabilities needed to author and electronically submit a National stage application via the Internet to the USPTO. An application enters the national stage process from an international application after compliance with 35 USC 371. See http://www.uspto.gov/ebc/efs/faq/whattype.htm.

The petition states that the EFS software provided applicant with the opportunity to specify the relationship between the present application and the PCT application. However, while the EFS software may be used to file a continuation of a PCT application, it does not permit the filing of a national stage application based on a PCT application. Furthermore, the fact that applicant may have incorrectly entered text into the "Continuing Data" field does not enable applicant to submit an impermissible application type.

U.S. statutes and regulations do not make specific provision for the requested conversion and as such the Office does not grant such petitions for conversion as a mere matter of course. The Office will only grant such petitions upon a showing by applicant of sufficient cause (e.g., the loss of patent rights) where no other remedy is available. In the present case, applicant has failed to make such a showing.

CONCLUSION

For the reasons above, the petition under 37 CFR 1.182 is DISMISSED without prejudice.

If reconsideration on the merits of the petition is desired, a proper response must be filed within TWO (2) MONTHS from the mail date of this decision. Extensions of time are available under 37 CFR 1.136(a). Any reconsideration request should include a cover letter entitled "Renewed Petition Under 37 CFR 1.182".

Please direct further correspondence with respect to this matter to Mail Stop PCT, Commissioner for Patents, Office of PCT Legal Administration, P.O. Box 1450, Alexandria, Virginia 22313-1450, with the contents of the letter marked to the attention of the Office of PCT Legal Administration.

Bryan Tung
PCT Legal Examiner
Office of PCT Legal Administration

Telephone: 703-308-6614
Facsimile: 703-308-6459

PATENT

IN THE UNITED STATES PATENT AND TRADEMARK OFFICE

Appl. No.	: 10/707,968	Confirmation No.	: 1967
Applicant	: Dominique MANGELINCK et al.		
Filed	: January 29, 2004		
TC / A.U.	: 2811		
Examiner	: Not Assigned Yet		
Docket No.	: ASTAP2004-01		
Customer No.	: 031366		
Title	: Gate Electrodes and the Formation Thereof		

CERTIFICATE OF TRANSMISSION
I hereby certify that this correspondence is being facsimile transmitted to the United States Patent and Trademark Office, Alexandria, VA 22313-1450 on May 25, 2004.

Signed: Wendy

Wendy LIM

Mail-Stop PCT
Commissioner for Patents
P.O. Box 1450
Alexandria, Va 22313-1450

Petition to convert an application which was filed under 35 U.S.C. § 111(A) to a national application filed under 35 U.S.C. § 371

Sir:

This petition (Petition) is submitted under 37 CFR §1.182 to convert the above-mentioned application (Application) filed under 35 U.S.C. §111(a) to a national stage application filed under 35 U.S.C. §371.

06/25/2004 CSHOOT 00000001 502388 10707968

Sale Ref: 00000001 DA#: 502388 10707968

01 FC:1460 130.00 DA

The filing receipt indicates that the Application has been treated as an application filed under 35 U.S.C. §111(a). However, the original intention of the Applicants is to file the Application under 35 U.S.C. §371 as a National Stage Application of International Application No. PCT/SG02/00174 (International Application), filed July 31, 2002, designating the United States of America.

The Application was filed using the Electronic Filing System (EFS), which provided an option on the "continuity data" screen to specify the §371 relationship between the present Application and the prior-filed International Application (*see* Exhibit A). The EFS software (ePAVE) automatically generated an application data sheet that clearly indicates that the Application is a National Stage of the International Application in the "Continuing Data" section (*see* Exhibit B), the International Application being identified by its PCT Application Number and International Filing Date. In addition, a reference to the International Application was provided in the originally filed specification (*see* Exhibit C), clearly indicating that the Application is a National Stage of the International Application.

Accordingly, Applicants respectfully request that the present Application be treated as a filing under 35 U.S.C. §371. Please charge the Petition fee of $130.00 under 37 CFR 1.53(b)(1) to Deposit Account No. 50-2388. The Commissioner is further authorized to charge any additional fees which may be required, or credit any overpayment to this account. Issuance of a corrected formal filing receipt is respectfully solicited.

Appl. No.: 10/707,968
Petition to convert a §111(a) application to a §371 application, dated May 25, 2004
Response to Notice Regarding Benefit/Priority Claim of Mar 23, 2004

Dated: May 25, 2004

Respectfully submitted,

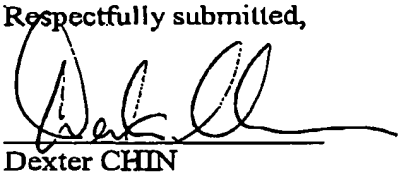

Dexter CHIN
Attorney for Applicants
Reg. No. 38,842

Horizon IP Pte Ltd
166 Kallang Way,
6th Floor
Singapore 349249
Tel: (65) 9836 9908
Fax: (65) 6746 8263

Exhibit A

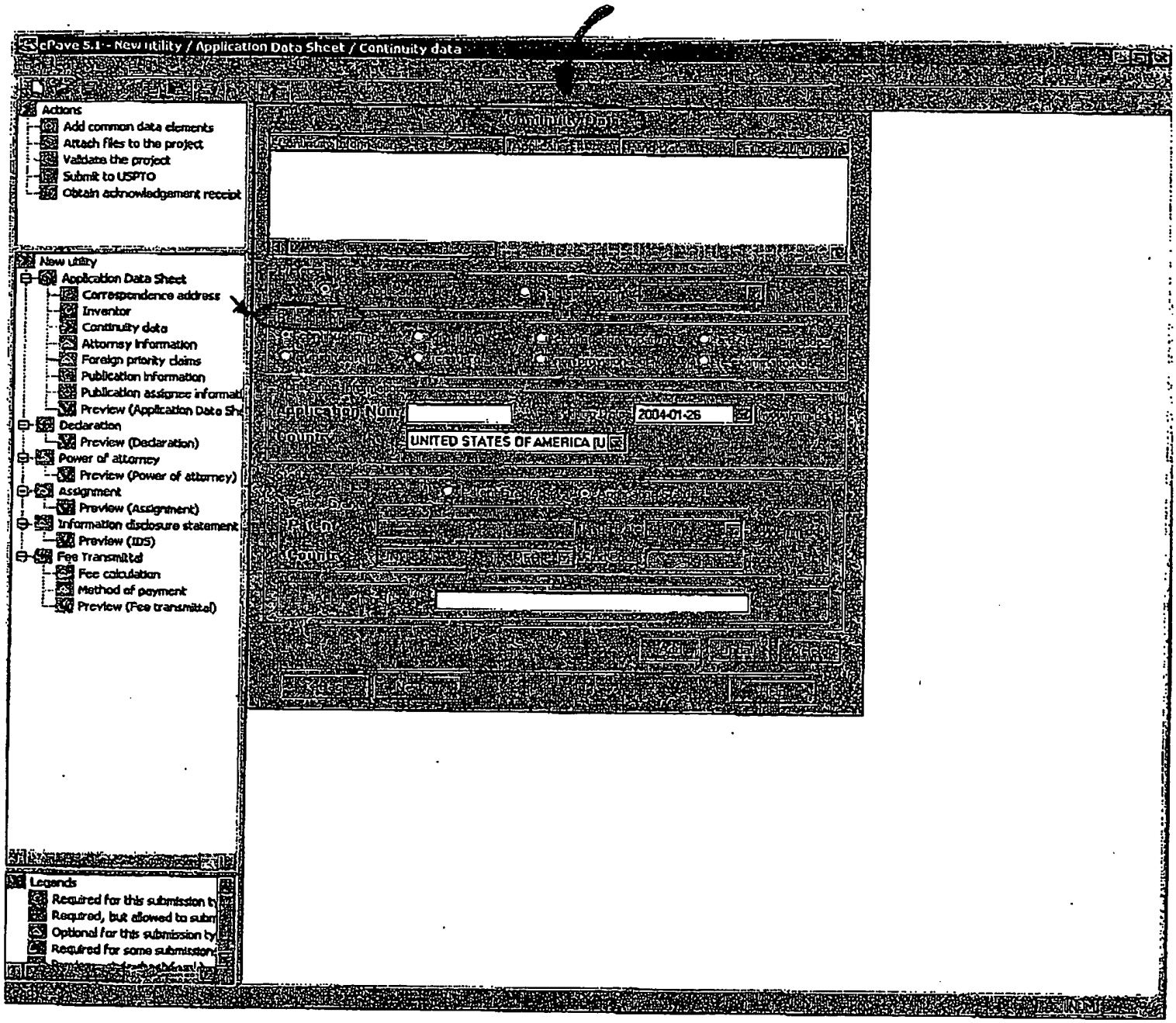
ePave 5.1 - New Utility / Application Data Sheet / Continuity data
Actions
Add common data elements
Attach files to the project
Validate the project
Submit to USPTO
Obtain acknowledgement receipt
New utility
Application Data Sheet
Correspondence address
Inventor
Continuity data
Attorney information
Foreign priority claims
Publication information
Publication assignee informati
Preview (Application Data Sh
Declaration
Preview (Declaration)
Power of attorney
Preview (Power of attorney)
Assignment
Preview (Assignment)
Information disclosure statement
Preview (IDS)
Fee Transmittal
Fee calculation
Method of payment
Preview (Fee transmittal)
Continuity Data
2004-01-26
UNITED STATES OF AMERICA (U
Legends
Required for this submission b
Required, but allowed to subm
Optional for this submission by
Required for some submission

Exhibit C

SPECIFICATION

[Electronic Version 1.2.8]

GATE ELECTRODES AND THE FORMATION THEREOF

Cross Reference to Related Applications

This application is the National Stage of International Application No. PCT/SG02/00174, filed July 31, 2002, and which was published in English under PCT Article 21(2) as WO 03/012876 A1 on February 13, 2003. The international application claims priority to Singaporean Application No. 200104614-3, filed July 31, 2001.

Background of Invention

[0001] Referring to Figure 1 of the accompanying drawings, a complementary metal oxide semiconductor (CMOS) transistor comprises an n channel MOS (NMOS) and a p channel MOS (PMOS). Historically, a polycrystalline n^+-Si gate is used as a gate electrode both in NMOS and PMOS transistors. For PMOS transistors additional boron implantation into the channel region of the Si substrate is needed to control the threshold voltage because of the low work function of n^+-Si. This can produce short channel effects and large sub-threshold currents and thus the PMOS transistor is less scaleable than the NMOS transistor. In order to solve this problem, a dual gate configuration where polycrystalline n^+-Si and p^+-Si are used as the gate for the NMOS and PMOS transistors, respectively, has been suggested. However, the dual gate CMOS has drawbacks, most notably boron penetration (for PMOS) through the gate oxide and the poly-depletion effect. Instead of using a dual gate, a material with a work function close to the value of the middle of the bandgap of silicon (4.61 eV), can be used for both NMOS and PMOS transistors. A material with such a work function is called a mid-gap material and the process utilising this material for a gate electrode is known as mid-gap CMOS technology.

[0002] In addition, the contact surface of the gate electrode is actually provided by a silicide layer ($TiSi_2$, $CoSi_2$, $PtSi_2$, PtSi or NiSi) on top of the polycrystalline Si gate (e.g. n+-Si) in current CMOS fabrication processes. At relatively high temperatures (e.g. 600°C), the silicide film is usually degraded by two phenomena: inversion and agglomeration. Inversion is due to the grain growth of Si during the formation of

****
*** RX REPORT ***
****

RECEPTION OK

TX/RX NO	6587
RECIPIENT ADDRESS	6567468263
DESTINATION ID	
ST. TIME	05/24 22:54
TIME USE	04'01
PGS.	10
RESULT	OK

21 SEP 2004

UNITED STATES PATENT AND TRADEMARK OFFICE

COMMISSIONER FOR PATENTS
UNITED STATES PATENT AND TRADEMARK OFFICE
P.O. BOX 1450
ALEXANDRIA, VA 22313-1450
www.uspto.gov

HORIZON IP PTE LTD
166 KALLANG WAY
6TH FLOOR
SINGAPORE 349249, SINGAPORE

In re Application of MANGELINCK :
U.S. Application No.: 10/707,968 :
PCT Application No.: PCT/SG02/00174 : DECISION
Int. Filing Date: 31 July 2002 :
Priority Date Claimed: 31 July 2001 :
Attorney Docket No.: ASTAP2004-01 :
For: GATE ELECTRODES AND THE FORMATION THEREOF :

This is in response to applicant's "Renewed Petition Under 37 CFR 1.182" filed 16 September 2004.

BACKGROUND

On 31 July 2002, applicant filed international application PCT/SG02/00174, which claimed priority of an earlier Singapore application filed 31 July 2001. A copy of the international application was communicated to the USPTO from the International Bureau on 13 February 2003. The thirty-month period for paying the basic national fee in the United States expired on 31 January 2004.

On 29 January 2004, applicant filed application papers in the USPTO via the Electronic Filing System (EFS).

On 26 May 2004, applicant filed a petition under 37 CFR 1.182.

On 25 June 2004, this Office mailed a decision dismissing the 26 May 2004 petition.

On 16 September 2004, applicant filed the present renewed petition under 37 CFR 1.182.

DISCUSSION

The renewed petition states that the 29 January 2004 filing was intended to be a national stage application under 35 U.S.C. 371 and that the EFS software allows an applicant to specify the electronically filed application as a national state application under 35 U.S.C. 371. However, as stated in the decision mailed 25 June 2004, it is not yet possible to file a national stage application under 35 U.S.C. 371 via EFS.

The information on the USPTO's internet site states,

> At this time EFS does not provi[d]e all the capabilities needed to author, submit and initially process electronic documents and attachments required for a complete 35 U.S.C. 371 National stage filing. A future release of EFS software will provide the software capabilities needed to author and electronically submit a National stage application via the Internet to the USPTO. An application enters the national stage process from an international application after compliance with 35 USC 371. See http://www.uspto.gov/ebc/efs/faq/whattype.htm.

The "Continuity Data" screen shot submitted with the petition demonstrates that the EFS software allows applicant to file a continuation of a 35 U.S.C. 371 application. However, as discussed above, the USPTO does not currently accept 35 U.S.C. 371 applications via EFS.

Furthermore, as discussed in the decision mailed 25 June 2004, U.S. statutes and regulations do not make specific provision for the requested conversion and as such the Office does not grant such petitions for conversion as a mere matter of course. The Office will only grant such petitions upon a showing by applicant of sufficient cause (e.g., the loss of patent rights) where no other remedy is available. In the present case, the renewed petition states that failure to grant the petition would cause the application to lose its priority date, which would result in a loss of patent rights. However, applicant has the ability make the current 35 U.S.C. 111(a) application a continuation of the international application, which would cause no loss of patent rights. See MPEP 1895.01, Section II. Since, such remedy is available to applicant, grant of the renewed petition is not indicated.

CONCLUSION

For the reasons above, the renewed petition under 37 CFR 1.182 is DISMISSED without prejudice.

If reconsideration on the merits of the petition is desired, a proper response must be filed within TWO (2) MONTHS from the mail date of this decision. Extensions of time are available under 37 CFR 1.136(a). Any reconsideration request should include a cover letter entitled "Renewed Petition Under 37 CFR 1.182".

Please direct further correspondence with respect to this matter to Mail Stop PCT, Commissioner for Patents, Office of PCT Legal Administration, P.O. Box 1450, Alexandria, Virginia 22313-1450, with the contents of the letter marked to the attention of the Office of PCT Legal Administration.

Bryan Tung
PCT Legal Examiner
Office of PCT Legal Administration

Telephone: 703-308-6614
Facsimile: 703-308-6459

19 NOV 2004

UNITED STATES PATENT AND TRADEMARK OFFICE

COMMISSIONER FOR PATENTS
UNITED STATES PATENT AND TRADEMARK OFFICE
P.O. BOX 1450
ALEXANDRIA, VA 22313-1450
www.uspto.gov

HORIZON IP PTE LTD
166 KALLANG WAY
6TH FLOOR
SINGAPORE 349249, SINGAPORE

In re Application of MANGELINCK	:	
U.S. Application No.: 10/707,968	:	
PCT Application No.: PCT/SG02/00174	:	DECISION
Int. Filing Date: 31 July 2002	:	
Priority Date Claimed: 31 July 2001	:	
Attorney Docket No.: ASTAP2004-01	:	
For: GATE ELECTRODES AND THE FORMATION THEREOF	:	

This is in response to applicant's "Renewed Petition Under 37 CFR 1.182" filed 12 November 2004.

BACKGROUND

On 31 July 2002, applicant filed international application PCT/SG02/00174, which claimed priority of an earlier Singapore application filed 31 July 2001. A copy of the international application was communicated to the USPTO from the International Bureau on 13 February 2003. The thirty-month period for paying the basic national fee in the United States expired on 31 January 2004.

On 29 January 2004, applicant filed application papers in the USPTO via the Electronic Filing System (EFS).

On 26 May 2004, applicant filed a petition under 37 CFR 1.182.

On 25 June 2004, this Office mailed a decision dismissing the 26 May 2004 petition.

On 16 September 2004, applicant filed a renewed petition under 37 CFR 1.182.

On 21 September 2004, this Office mailed a decision dismissing the 16 September 2004 petition.

On 12 November 2004, applicant filed the present renewed petition under 37 CFR 1.182.

DISCUSSION

As discussed in the decision mailed 25 June 2004, U.S. statutes and regulations do not make specific provision for the requested conversion and as such the Office does not grant such petitions for conversion as a mere matter of course. The Office will only grant such petitions upon a showing by applicant of sufficient cause (e.g., the loss of patent rights) where no other remedy is available.

As noted in the decision mailed 21 September 2004, applicant has the ability make the current 35 U.S.C. 111(a) application a continuation of the international application, which would cause no loss of patent rights. The present renewed petition states that because the time period for amending the current application to include an appropriate reference to the corresponding international application has lapsed, such remedy is not available to applicant. However, the necessary amendment may be made in accordance with 37 CFR 1.78(a)(3) without any loss of patent rights. Thus, grant of the renewed petition is not indicated.

CONCLUSION

For the reasons above, the renewed petition under 37 CFR 1.182 is DISMISSED without prejudice.

If reconsideration on the merits of the petition is desired, a proper response must be filed within TWO (2) MONTHS from the mail date of this decision. Extensions of time are available under 37 CFR 1.136(a). Any reconsideration request should include a cover letter entitled "Renewed Petition Under 37 CFR 1.182".

Please direct further correspondence with respect to this matter to Mail Stop PCT, Commissioner for Patents, Office of PCT Legal Administration, P.O. Box 1450, Alexandria, Virginia 22313-1450, with the contents of the letter marked to the attention of the Office of PCT Legal Administration.

Bryan Tung
PCT Legal Examiner
Office of PCT Legal Administration

Telephone: 703-308-6614
Facsimile: 703-308-6459

24 JAN 2005

UNITED STATES PATENT AND TRADEMARK OFFICE

COMMISSIONER FOR PATENTS
UNITED STATES PATENT AND TRADEMARK OFFICE
P.O. BOX 1450
ALEXANDRIA, VA 22313-1450
www.uspto.gov

HORIZON IP PTE LTD
166 KALLANG WAY
6TH FLOOR
SINGAPORE 349249, SINGAPORE

In re Application of MANGELINCK :
U.S. Application No.: 10/707,968 :
PCT Application No.: PCT/SG02/00174 : DECISION
Int. Filing Date: 31 July 2002 :
Priority Date Claimed: 31 July 2001 :
Attorney Docket No.: ASTAP2004-01 :
For: GATE ELECTRODES AND THE FORMATION THEREOF :

This is in response to applicant's "Petition Under 37 CFR §1.78(a)(3) for Accepting an Unintentionally Delayed Benefit Claim" filed 17 January 2005.

BACKGROUND

On 31 July 2002, applicant filed international application PCT/SG02/00174, which claimed priority of an earlier Singapore application filed 31 July 2001. A copy of the international application was communicated to the USPTO from the International Bureau on 13 February 2003. The thirty-month period for paying the basic national fee in the United States expired on 31 January 2004.

On 29 January 2004, applicant filed application papers in the USPTO via the Electronic Filing System (EFS).

On 26 May 2004, applicant filed a petition under 37 CFR 1.182.

On 25 June 2004, this Office mailed a decision dismissing the 26 May 2004 petition.

On 16 September 2004, applicant filed a renewed petition under 37 CFR 1.182.

On 21 September 2004, this Office mailed a decision dismissing the 16 September 2004 petition.

On 12 November 2004, applicant filed a renewed petition under 37 CFR 1.182.

On 19 November 2004, this Office mailed a decision dismissing the 12 November 2004 renewed petition.

On 17 January 2005, applicant filed the present petition under 37 CFR 1.78(a)(3).

DISCUSSION

37 CFR 1.78(a)(3) provides that a petition to accept an unintentionally delayed claim under 35 U.S.C. 120, 121, or 365(c) for the benefit of a prior-filed application must be accompanied by:

> (1) The reference required by 35 U.S.C. 120 and paragraph (a)(2) of this section to the prior-filed application, unless previously submitted;
>
> (2) The surcharge set forth in § 1.17(t); and
>
> (3) A statement that the entire delay between the date the claim was due under paragraph (a)(2)(ii) of this section and the date the claim was filed was unintentional. The Director may require additional information where there is a question whether the delay was unintentional.

With regard to item (1) above, the requisite reference has been provided.

With regard to item (2) above, the requisite surcharge has been provided.

With regard to item (3) above, the requisite statement has been provided.

CONCLUSION

For the reasons above, the petition under 37 CFR 1.78(a)(3) is GRANTED.

This application is being forwarded to the Office of Initial Patent Examination for processing as a 35 U.S.C. 111(a) continuation application of international application PCT/SG02/00174.

Bryan Tung
PCT Legal Examiner
Office of PCT Legal Administration

Telephone: 703-308-6614
Facsimile: 703-308-6459

UNITED STATES PATENT AND TRADEMARK OFFICE

COMMISSIONER FOR PATENTS
UNITED STATES PATENT AND TRADEMARK OFFICE
P.O. BOX 1450
ALEXANDRIA, VA 22313-1450
WWW.USPTO.GOV

Paper No. None

FREDERICK W. GIBB, III
GIBB INTELLECTUAL PROPERTY LAW FIRM, LLC
2568-A RIVA ROAD
SUITE 304
ANNAPOLIS MD 21401

COPY MAILED

JAN 19 2007

OFFICE OF PETITIONS

In re Application of :
Jeffrey H. Dreibelbis et al. :
Application No. 10/707,971 : DECISION ON PETITION
Filed: January 29, 2004 : UNDER 37 C.F.R. §1.181
Attorney Docket No. :
BUR920030154US1 :
Title: REMOTE BIST HIGH SPEED :
TEST AND REDUNDANCY CALCULATION :

This is a decision on the petition filed on October 23, 2006, pursuant to 37 C.F.R. §1.181, requesting that the holding of abandonment in the above-identified application be withdrawn.

The above-identified application became abandoned for failure to reply in a timely manner to the non-final Office action, mailed March 9, 2006, which set a shortened statutory period for reply of three months. No response was received, and no extensions of time under the provisions of 37 C.F.R. §1.136(a) were requested. Accordingly, the above-identified application became abandoned on May 10, 2006. A notice of abandonment was mailed on October 4, 2006.

With the present petition, Petitioner has alleged that the mailing was not received. The showing required to establish nonreceipt of an Office communication must include a statement from the practitioner stating that the Office communication was not received by the practitioner and attesting to the fact that a search of the file jacket and docket records indicates that the Office communication was not received. In addition, a copy of the docket record where the non-received Office communication

would have been entered had it been received and docketed must be attached to and referenced in practitioner's statement[1].

Petitioner has met the requirements of Delgar v. Schuyler, 172 USPQ 513 (D.D.C. 1971), in that he has asserted that the Office communication was not received, that he has searched both the file jacket and the docket record, and he has included a copy of the latter.

Considering the facts and circumstances of the delay at issue, as set forth on petition, it is concluded that Petitioner has met his burden of establishing that the mailing was not received.

Accordingly, the petition under 37 C.F.R. §1.181(a) is **GRANTED**. The holding of abandonment is **WITHDRAWN**.

The Technology Center will be notified of this decision. The Technology Center's support staff will re-mail the communication of March 9, 2006, and will set a new period for response.

Telephone inquiries regarding this decision should be directed to the undersigned at (571) 272-3225[2]. All other inquiries concerning examination procedures or status of the application should be directed to the Technology Center.

Paul Shanoski
Senior Attorney
Office of Petitions
United States Patent and Trademark Office

1 See MPEP 711.03(c).
2 Petitioner will note that all practice before the Office should be in writing, and the action of the Office will be based exclusively on the written record in the Office. See 37 C.F.R. §1.2. As such, Petitioner is reminded that no telephone discussion may be controlling or considered authority for Petitioner's further action(s).

UNITED STATES PATENT AND TRADEMARK OFFICE

UNITED STATES DEPARTMENT OF COMMERCE
United States Patent and Trademark Office
Address: COMMISSIONER FOR PATENTS
P.O. Box 1450
Alexandria, Virginia 22313-1450
www.uspto.gov

FREDERICK W. GIBB, III
Gibb Intellectual Property Law Firm, LLC
844 West Street
SUITE 100
ANNAPOLIS, MD 21401

Mail Date: 04/20/2010

Applicant	: Brian T. Denton	: DECISION ON REQUEST FOR
Patent Number	: 7584113	: RECALCULATION of PATENT
Issue Date	: 09/01/2009	: TERM ADJUSTMENT IN VIEW
Appliction No	: 10/707,973	: OF WYETH AND NOTICE OF INTENT TO
Filed	: 01/29/2004	: ISSUE CERTIFICATE OF CORRECTION
		:

The Request for Recalculation is **GRANTED** to the extent indicated.

The patent term adjustment has been determined to be **1370** days. The USPTO will *sua sponte* issue a certificate of correction reflecting the amount of PTA days determined by the recalculation.

Prior to the issuance of the certificate of correction, the USPTO will afford patentee an opportunity to be heard and request reconsideration. Accordingly, patentee has **one month or thirty (30) days**, whichever is longer, to file a request for reconsideration of this patent term adjustment calculation. See 35 U.S.C. 154(b)(3)(B)(ii) and 37 CFR 1.322(a)(4). No extensions of time will be granted under 37 CFR 1.136.

Patentee should use document code PET.OP if electronically filing a request for reconsideration of this patent term adjustment calculation. The patentee must also include the information required by 37 CFR 1.705(b)(2) and the fee required by 37 CFR 1.18(e). If patentee does not file a timely request for reconsideration of this patent term adjustment calculation including the information required by 37 CFR 1.705(b)(2) and the fee required by 37 CFR 1.18(e), the USPTO will issue a certificate of correction reflecting the PTA determination noted above.

Patentee should be aware that in order to preserve the right to review in the United States District Court for the District of Columbia of the USPTO patent term adjustment determination, patentee must ensure that he or she also take the steps required under 35 U.S.C. 154(b)(4)(A) in a timely manner. Nothing in the request for recalculation should be construed as providing an alternative time frame for commencing a civil action under 35 U.S.C. 154(b)(4)(A).

Any questions concerning this decision should be directed to the Office of Patent Legal Administration at 571-272-7702.

UNITED STATES PATENT AND TRADEMARK OFFICE

Commissioner for Patents
United States Patent and Trademark Office
P.O. Box 1450
Alexandria, VA 22313-1450
www.uspto.gov

COPY MAILED

SEP 26 2006

OFFICE OF PETITIONS

Olivia Tolan
British American Tobacco
R & D Centre
Patents Department
Regents Park Road, Mailbrook
Southhampton, SO15-8TL

In re Application of :
SELLERGREN, et al. :
Application No. 10/707,990 : DECISION ON PETITION
Filed: January 30, 2004 : TO WITHDRAW
Attorney Docket No. 74239 : FROM RECORD
:

This is a decision on the Request to Withdraw as attorney or agent of record under 37 C.F.R. § 1.36(b), filed June 29, 2006.

The request is **NOT APPROVED**.

A review of the request indicates that Olivia Tolan is no longer associated with Customer Number 26288. Accordingly, the request to withdraw under 37 C.F.R. § 1.36(b) is not applicable.

All future communications from the Office will continue to be directed to the above-listed address until otherwise notified by applicant.

Telephone inquiries concerning this decision should be directed to Patricia Volpe at 571-272-6825.

David Bucci
Petitions Examiner
Office of Petitions

cc: **Albihns Stockholm AB**
Box 5581, Linnegatan 2
SE-114 85 Stockholm; SWEDENn
Stockholm, Sweden

UNITED STATES PATENT AND TRADEMARK OFFICE

UNITED STATES DEPARTMENT OF COMMERCE
United States Patent and Trademark Office
Address: COMMISSIONER FOR PATENTS
P.O. Box 1450
Alexandria, Virginia 22313-1450
www.uspto.gov

GOODWIN PROCTER LLP
901 NEW YORK AVENUE, N.W.
WASHINGTON, DC 20001

Mail Date: 05/21/2010

Applicant	: Mark J. Dickelman	: DECISION ON REQUEST FOR
Patent Number	: 7669239	: RECALCULATION of PATENT
Issue Date	: 02/23/2010	: TERM ADJUSTMENT IN VIEW
Application No	: 10/708,004	: OF WYETH AND NOTICE OF INTENT TO
Filed	: 02/02/2004	: ISSUE CERTIFICATE OF CORRECTION
		:

The Request for Recalculation is **GRANTED** to the extent indicated.

The patent term adjustment has been determined to be **1788** days. The USPTO will *sua sponte* issue a certificate of correction reflecting the amount of PTA days determined by the recalculation.

Prior to the issuance of the certificate of correction, the USPTO will afford patentee an opportunity to be heard and request reconsideration. Accordingly, patentee has **one month or thirty (30) days**, whichever is longer, to file a request for reconsideration of this patent term adjustment calculation. See 35 U.S.C. 154(b)(3)(B)(ii) and 37 CFR 1.322(a)(4). No extensions of time will be granted under 37 CFR 1.136.

Patentee should use document code PET.OP if electronically filing a request for reconsideration of this patent term adjustment calculation. The patentee must also include the information required by 37 CFR 1.705(b)(2) and the fee required by 37 CFR 1.18(e). If patentee does not file a timely request for reconsideration of this patent term adjustment calculation including the information required by 37 CFR 1.705(b)(2) and the fee required by 37 CFR 1.18(e), the USPTO will issue a certificate of correction reflecting the PTA determination noted above.

Patentee should be aware that in order to preserve the right to review in the United States District Court for the District of Columbia of the USPTO patent term adjustment determination, patentee must ensure that he or she also take the steps required under 35 U.S.C. 154(b)(4)(A) in a timely manner. Nothing in the request for recalculation should be construed as providing an alternative time frame for commencing a civil action under 35 U.S.C. 154(b)(4)(A).

Any questions concerning this decision should be directed to the Office of Patent Legal Administration at 571-272-7702.

UNITED STATES PATENT AND TRADEMARK OFFICE

Commissioner for Patents
United States Patent and Trademark Office
P.O. Box 1450
Alexandria, VA 22313-1450
www.uspto.gov

BLACKWELL SANDERS PEPER MARTIN LLP
720 OLIVE STREET
SUITE 2400
ST LOUIS MO 63101

COPY MAILED

SEP 14 2007

OFFICE OF PETITIONS

In re Patent No. 7,091,309	:
Brown, et al.	: DECISION REGARDING
Issue Date: August 15, 2006	: PATENT TERM ADJUSTMENT
Application No. 10/708,026	: AND
Filed: February 3, 2004	: NOTICE OF INTENT TO ISSUE
Attorney Docket No. 713629.NEW	: CERTIFICATE OF CORRECTION

This letter is in response to the "PETITION UNDER 37 CFR 1.705(d) REQUEST FOR RECONSIDERATION OF PATENT TERM ADJUSTMENT" filed September 8, 2006, requesting correction of the patent term adjustment (PTA) indicated on the patent.

The petition is **GRANTED**.

The patent term adjustment indicated on the patent is to be corrected by issuance of a certificate of correction showing a revised Patent Term Adjustment of **one hundred ninety-five (195)** days.

On August 15, 2006, the above-identified application matured into U.S. Patent No. 7,091,309. The patent issued with a Patent Term Adjustment of one hundred four (104) days. Patentees state that they were erroneously assessed applicant delay of ninety-one (91) days for filing the issue fee on June 29, 2006.

The ninety-one (91) days of applicant delay assessed for the payment of the issue fee on June 29, 2006 is incorrect. A review of the file confirms that applicants did not file the issue fee on that date, but rather on March 27, 2006. A review of Office finance records reveals that Applicants' deposit account contained sufficient funds to charge the issue fee on that day. Accordingly, zero (0) days of applicant delay should have been assessed for the timely filing of the issue fee.

In view thereof, issuance of a certificate of correction pursuant to 35 U.S.C. 254 and 37 CFR § 1.322 is appropriate.

Receipt of the $200 fee under 37 CFR §1.18(e) is acknowledged.

The application file is being forwarded to the Certificates of Correction Branch for issuance of a certificate of correction in order to rectify the error regarding the patent term information. See 35 U.S.C. § 254 and 37 CFR 1.322. The certificate of correction will indicate that the term of the above-identified patent is extended or adjusted by **one hundred ninety-five (195)** days subject to any disclaimers.

Telephone inquiries specific to this matter should be directed to Cliff Congo, Petitions Attorney, at (571)272-3207.

Kery Fries
Senior Legal Advisor
Office of Patent Legal Administration
Office of Deputy Commissioner
for Patent Examination Policy

Enclosure: Copy of Draft Certificate of Correction

UNITED STATES PATENT AND TRADEMARK OFFICE

DRAFT CERTIFICATE OF CORRECTION

PATENT : 7,091,309 B2

DATED : August 15, 2006

INVENTOR(S) : Brown, et al.

DRAFT

It is certified that error appears in the above-identified patent and that said Letters Patent is hereby corrected as shown below:

On the cover page,

[*] Notice: Subject to any disclaimer, the term of this patent is extended or adjusted under 35 USC 154(b) by (104) days

Delete the phrase "by 104 days" and insert – by 195 days—

UNITED STATES PATENT AND TRADEMARK OFFICE

COMMISSIONER FOR PATENTS
UNITED STATES PATENT AND TRADEMARK OFFICE
P.O. BOX 1450
ALEXANDRIA, VA 22313-1450
www.uspto.gov

NAIPO (NORTH AMERICA INTERNATIONAL PATENT OFFICE)
P.O. BOX 506
MERRIFIELD, VA 22116

MAIL

JAN 25 2005

DIRECTOR OFFICE
TECHNOLOGY CENTER 2600

In re application of:
Chih-Hao Wang
Application No. 10/708,046
Filed: February 4, 2004
For: METHOD FOR SETTING A PIXEL CLOCK OF A DISPLAY DRIVING CIRCUIT

DECISION ON REQUEST TO WITHDRAW FROM RECORD

This is a decision on the request for withdrawal as attorney/agent and change of correspondence address filed on May 18, 2004

A grantable request to withdraw as attorney/agent of record must:
(1) indicate the present mailing address of the attorney(s)/agent(s) who seek(s) to withdraw, and
(2) be signed by each attorney/agent seeking to withdraw or clearly be signed on their behalf, and
(3) be *approved* at least thirty (30) days prior to the maximum extendable period for response to any outstanding Office Action, and
(4) indicate the address to which future correspondence should be mailed.

Petitioner has satisfied the requirements for successfully requesting withdrawal. Accordingly, the request is **GRANTED.**

Mord Michael Lewis have been withdrawn.

All future communications from the Office will continue to be directed to the address listed above until otherwise notified by applicant. Applicant is reminded of the obligation to promptly notify the Patent and Trademark Office of any change in correspondence address to ensure receipt of all communications from the Office.

Kenneth A. Wieder
Special Program Examiner
Technology Center 2600
Communications
(571) 272-2986

RECEIVED
CENTRAL FAX CENTER
FEB 15 2006

IN THE UNITED STATES PATENT AND TRADEMARK OFFICE

Applicant:	PETER CHEO	)
		) Group Art Unit: 1731
Serial No.	10/708,049	)
		) Confirmation No. 2048
Filed:	February 5, 2004	)
		) Examiner: NYA Lopez, Carlos
For:	METHOD FOR FORMING HIGH-DENSITY MULTICORE PHASE-LOCKED FIBER LASER ARRAY	)))

Commissioner for Patents
P.O. Box 1450
Alexandria, VA 22313-1450

PETITION TO MAKE SPECIAL UNDER 37 C.F.R.§ 1.102(c)(1) and M.P.E.P. § 708.02 IV

Applicant hereby petition to make this application special because applicant Peter Cheo is over 65 years of age.

As a showing of this fact, accompanying this petition is a declaration by the applicant stating that he is over 65 years of age.

In accordance with 37 C.F.R. §1.102(c), no fee is required for this petition.

If there are any fees associated with this petition, please charge them to Deposit Account No. 06-1130 maintained by Applicant's attorney.

Respectfully submitted,

CANTOR COLBURN LLP

By: /Sean Sullivan/
Sean F. Sullivan
Registration No. 38,328
55 Griffin Road South, Bloomfield, CT 06002
Telephone: (860) 286-2929
Facsimile (860) 286-0115
Customer No. 23413

Date: February 15, 2006

PCT-0001

PETITION GRANTED

William Krynski
Special Program Examiner
Technology Center 1700
FEB 27 2006

UNITED STATES PATENT AND TRADEMARK OFFICE

Commissioner for Patents
United States Patent and Trademark Office
P.O. Box 1450
Alexandria, VA 22313-1450
www.uspto.gov

Shyam K. Gupta
Bioderm Research
5221 E. Windrose Drive
Scottsdale, AZ 85254

MAILED

MAR 0 3 2009

OFFICE OF PETITIONS

In re Application of :
Shyam K. Gupta :
Application No. 10/708,093 : DECISION ON PETITION
Filed: February 7, 2004 : TO MAKE SPECIAL UNDER
Attorney Docket No. ARL 05-46 : 37 CFR 1.102(c)(1)
:

This is a decision on the petition under 37 CFR 1.102(c)(1), filed January 30, 2009, to make the above-identified application special based on applicant's age as set forth in M.P.E.P. § 708.02, Section IV.

The petition is **GRANTED**.

A grantable petition to make an application special under 37 CFR 1.102(c)(1) and MPEP § 708.02, Section IV: Applicant's Age must be accompanied by evidence showing that at least one of the applicants is 65 years of age, or more, such as a birth certificate or a statement by applicant. No fee is required.

The instant petition includes a statement by the applicant. Accordingly, the above-identified application has been accorded "special" status.

Telephone inquiries concerning this decision should be directed to Kimberly Inabinet at 571-272-4618.

All other inquiries concerning either the examination or status of the application should be directed to the Technology Center.

The application is being forwarded to the Technology Center Art Unit 1616 for action on the merits commensurate with this decision.

Kimberly Inabinet
Petitions Examiner
Office of Petitions

SPE RESPONSE FOR CERTIFICATE OF CORRECTION

DATE : 6/24/09 Paper No.: —

TO SPE OF : ART UNIT 2857

SUBJECT : Request for Certificate of Correction for Appl. No.: 10/708115 Patent No.: 7502700B2

Please respond to this request for a certificate of correction within 7 days.

FOR IFW FILES:

Please review the requested changes/corrections as shown in the **COCIN** document(s) in the IFW application image. No new matter should be introduced, nor should the scope or meaning of the claims be changed.

Please complete the response (see below) and forward the completed response to scanning using document code **COCX**.

FOR PAPER FILES:

Please review the requested changes/corrections as shown in the attached certificate of correction. Please complete this form (see below) and forward it with the file to:

Certificates of Correction Branch (C of C)
Randolph Square 9D62-B
Palm Location 7580

Virginia Tolbert
Certificates of Correction Branch
703-756-1591

Thank You For Your Assistance

The request for issuing the above-identified correction(s) is hereby:
Note your decision on the appropriate box.

☐ **Approved**	**All** changes apply.
☐ **Approved in Part**	Specify below which changes **do not** apply.
☒ **Denied**	State the reasons for denial below.

Comments:
Present application (10/708,115) is not a U.S. national phase application under 35 USC 371 of PCT International Application No. PCT/JP00/01627. Present application claims foreign priority under 35 USC 119(a)-(d) or (g) or 365(b) of PCT/JP00/01627 as indicated in the Oath or Declaration filed 06/29/2005. Therefore, the priority document information on the face of U.S. Patent No. 7,502,700 is deemed correct and the Request for Certificate of Correction filed 06/17/2009 is hereby denied.

/Eliseo Ramos-Feliciano/
Supervisory Patent Examiner Art Unit 2857

SPE **Art Unit**

UNITED STATES PATENT AND TRADEMARK OFFICE

Commissioner for Patents
United States Patent and Trademark Office
P.O. Box 1450
Alexandria, VA 22313-1450
www.uspto.gov

August 6, 2009

Howard I. Sobelman
One Arizona Center
400 East Van Buren
Phoenix, AZ 85004-2202

Patent No: 7,502,700 B2
Application No.: 10/708,115
Applicant: Yoshinori Iwaizono
Issued: March 10, 2009
Title: **SECONDARY BATTERY CONTROL CIRCUIT**

Request for Certificate of Correction:

Consideration has been given to your request for the issuance of a certificate of correction for the above-identified patent under the provisions of Rules 1.322/1.323.

Per the examiner "present application (10/708,115) is not a U.S. national phase application under 35USC 371 of PCT International Application No.PCT/JP00/01627. Present application claims foreign priority under 35 USC 119 (a)-(d) or (g) or 365 (b) of PCT/JP00/01627 as indicated in the Oath or Declaration filed 06/29/2005. Therefore, the priority document information on the face of U.S. Patent No. 8,502,700 is deemed correct".

In view of the foregoing, your request in these matters is hereby **denied.**

Future correspondence concerning this matter should be directed to Decisions & Certificates of Correction Branch.

/Virginia Tolbert/
Virginia Tolbert
For Mary Diggs, Supervisor
Decisions and Certificate of Correction
(703) 756-1591

vt

SPE RESPONSE FOR CERTIFICATE OF CORRECTION

DATE : 8/24/09 Paper No.: ———

TO SPE OF : ART UNIT 2857

SUBJECT : Request for Certificate of Correction for Appl. No.: 10/708115 Patent No.: 7502700 B2

Please respond to this request for a certificate of correction within 7 days.

FOR IFW FILES:

Please review the requested changes/corrections as shown in the **COCIN** document(s) in the IFW application image. No new matter should be introduced, nor should the scope or meaning of the claims be changed.

Please complete the response (see below) and forward the completed response to scanning using document code **COCX**.

FOR PAPER FILES:

Please review the requested changes/corrections as shown in the attached certificate of correction. Please complete this form (see below) and forward it with the file to:

Certificates of Correction Branch (C of C)
Randolph Square 9D62-B
Palm Location 7580

Virginia Tolbert
Certificates of Correction Branch
703-756-1591

Thank You For Your Assistance

The request for issuing the above-identified correction(s) is hereby:
Note your decision on the appropriate box.

☐ **Approved**	All changes apply.
☐ **Approved in Part**	Specify below which changes **do not** apply.
☒ **Denied**	State the reasons for denial below.

Comments: Applicant filed original Declaration on 02/10/2004. Subsequent to that, Applicant filed a new Declaration on 06/29/2005. The remarks accompanying the new Declaration of 06/29/2005 on page 2 indicate that "It was a clerical error to check the "priority not claimed" box. Applicant attaches a new executed declaration without the clerical error properly claiming priority to PCT/JP00/01627". Therefore, the priority document information on the face of U.S. Patent No. 7,502,700 is deemed correct and the Second Request for Certificate of Correction filed 08/12/2009 is hereby denied.

/Eliseo Ramos-Feliciano/
Supervisory Patent Examiner — Art Unit 2857

SPE — **Art Unit**

UNITED STATES PATENT AND TRADEMARK OFFICE

Commissioner for Patents
United States Patent and Trademark Office
P.O. Box 1450
Alexandria, VA 22313-1450
www.uspto.gov

October 13, 2009

Howard I Sobelman
Snell & Wilmer L.L.P.
One Arizona Center
400 East Van Buren
Phoenix, AZ 85004-2202

Patent No: 7,502,700 B2
Application No: 10/708,115
Applicant: Yoshinori Iwaizono
Issued: March 10, 2009
Title: **SECONDARY BATTERY CONTROL CIRCUIT**

Request for Certificate of Correction:

Consideration has been given to your request for the issuance of a certificate of correction for the above- identified patent under the provisions of Rule 1.322 or 1.323.

Per the examiner "Applicant filed original Declaration on 02/10/2004. Subsequent to that, applicant filed a new Declaration on 06/29/2005. The remarks accompanying the new Declaration of 06/29/2005 on page 2 indicate that "It was a clerical error to check the "priority not claimed" box. Applicant attaches a new executed declaration without the clerical error properly claiming priority to PCT/JP00/01627". Therefore, the priority document information on the face of U.S. Patent No. 7,502,700 is deemed correct".

In view of the foregoing your Second Request for Certificate of Correction filed 08/12/2009 is hereby **denied**.

Further correspondence concerning this matter should be filed and directed to Decisions & certificated of Correction Branch.

/Virginia Tolbert/
Virginia Tolbert
For Mary Diggs, Supervisor
Decisions and Certificate of Correction
571-272-0460

vt

UNITED STATES PATENT AND TRADEMARK OFFICE

UNITED STATES DEPARTMENT OF COMMERCE
United States Patent and Trademark Office
Address: COMMISSIONER FOR PATENTS
P.O. Box 1450
Alexandria, Virginia 22313-1450
www.uspto.gov

SCHMEISER, OLSEN & WATTS
22 CENTURY HILL DRIVE
SUITE 302
LATHAM, NY 12110

Mail Date: 04/21/2010

Applicant	: Robert A. Orzell	: DECISION ON REQUEST FOR
Patent Number	: 7606743	: RECALCULATION of PATENT
Issue Date	: 10/20/2009	: TERM ADJUSTMENT IN VIEW
Appliction No	: 10/708,119	: OF WYETH AND NOTICE OF INTENT TO
Filed	: 02/10/2004	: ISSUE CERTIFICATE OF CORRECTION
		:

The Request for Recalculation is **GRANTED** to the extent indicated.

The patent term adjustment has been determined to be **1371** days. The USPTO will *sua sponte* issue a certificate of correction reflecting the amount of PTA days determined by the recalculation.

Prior to the issuance of the certificate of correction, the USPTO will afford patentee an opportunity to be heard and request reconsideration. Accordingly, patentee has **one month or thirty (30) days**, whichever is longer, to file a request for reconsideration of this patent term adjustment calculation. See 35 U.S.C. 154(b)(3)(B)(ii) and 37 CFR 1.322(a)(4). No extensions of time will be granted under 37 CFR 1.136.

Patentee should use document code PET.OP if electronically filing a request for reconsideration of this patent term adjustment calculation. The patentee must also include the information required by 37 CFR 1.705(b)(2) and the fee required by 37 CFR 1.18(e). If patentee does not file a timely request for reconsideration of this patent term adjustment calculation including the information required by 37 CFR 1.705(b)(2) and the fee required by 37 CFR 1.18(e), the USPTO will issue a certificate of correction reflecting the PTA determination noted above.

Patentee should be aware that in order to preserve the right to review in the United States District Court for the District of Columbia of the USPTO patent term adjustment determination, patentee must ensure that he or she also take the steps required under 35 U.S.C. 154(b)(4)(A) in a timely manner. Nothing in the request for recalculation should be construed as providing an alternative time frame for commencing a civil action under 35 U.S.C. 154(b)(4)(A).

Any questions concerning this decision should be directed to the Office of Patent Legal Administration at 571-272-7702.

UNITED STATES PATENT AND TRADEMARK OFFICE

UNITED STATES DEPARTMENT OF COMMERCE
United States Patent and Trademark Office
Address: COMMISSIONER FOR PATENTS
P.O. Box 1450
Alexandria, Virginia 22313-1450
www.uspto.gov

MCGARRY BAIR PC
32 Market Ave. SW
SUITE 500
GRAND RAPIDS, MI 49503

Mail Date: 04/23/2010

Applicant	: Alan J. Krebs	: DECISION ON REQUEST FOR
Patent Number	: 7568255	: RECALCULATION of PATENT
Issue Date	: 08/04/2009	: TERM ADJUSTMENT IN VIEW
Application No	: 10/708,132	: OF WYETH AND NOTICE OF INTENT TO
Filed	: 02/09/2004	: ISSUE CERTIFICATE OF CORRECTION
		:

The Request for Recalculation is **GRANTED** to the extent indicated.

The patent term adjustment has been determined to be **1541** days. The USPTO will *sua sponte* issue a certificate of correction reflecting the amount of PTA days determined by the recalculation.

Prior to the issuance of the certificate of correction, the USPTO will afford patentee an opportunity to be heard and request reconsideration. Accordingly, patentee has **one month or thirty (30) days**, whichever is longer, to file a request for reconsideration of this patent term adjustment calculation. See 35 U.S.C. 154(b)(3)(B)(ii) and 37 CFR 1.322(a)(4). No extensions of time will be granted under 37 CFR 1.136.

Patentee should use document code PET.OP if electronically filing a request for reconsideration of this patent term adjustment calculation. The patentee must also include the information required by 37 CFR 1.705(b)(2) and the fee required by 37 CFR 1.18(e). If patentee does not file a timely request for reconsideration of this patent term adjustment calculation including the information required by 37 CFR 1.705(b)(2) and the fee required by 37 CFR 1.18(e), the USPTO will issue a certificate of correction reflecting the PTA determination noted above.

Patentee should be aware that in order to preserve the right to review in the United States District Court for the District of Columbia of the USPTO patent term adjustment determination, patentee must ensure that he or she also take the steps required under 35 U.S.C. 154(b)(4)(A) in a timely manner. Nothing in the request for recalculation should be construed as providing an alternative time frame for commencing a civil action under 35 U.S.C. 154(b)(4)(A).

Any questions concerning this decision should be directed to the Office of Patent Legal Administration at 571-272-7702.

UNITED STATES PATENT AND TRADEMARK OFFICE

Commissioner for Patents
United States Patent and Trademark Office
P.O. Box 1450
Alexandria, VA 22313-1450
www.uspto.gov

BLACKWELL SANDERS PEPER MARTIN LLP
720 OLIVE STREET
SUITE 2400
ST. LOUIS MO 63101

COPY MAILED

NOV 0 5 2004

OFFICE OF PETITIONS

In re Application of
Tobler et al.
Application No.10/708,146
Filed: February 11, 2004
Attorney Docket No. 718026.64
Title of Invention: A SYSTEM AND METHOD FOR MONITORING FACILITY DATA

DECISION GRANTING STATUS UNDER 37 CFR 1.47(A)

This is in response to the petition under 37 CFR 1.47(a) filed October 12, 2004. [1]

The petition is GRANTED.

Petitioner has shown that the non-signing inventor has refused to join in the filing of the above-identified application after having been presented with the application papers. The petition attest a copy of the application was sent to non-signing inventor's last known address. The non-signing inventor's failure to respond to the application mailing sufficiently establishes that he refuses to execute the application papers.

The above-identified application and papers have been reviewed and found in compliance with 37 CFR 1.47(a). This application is hereby accorded Rule 1.47(a) status.

As provided in Rule 1.47(c), this Office will forward notice of this application's filing to the non-signing inventor at the address given in the petition. Notice of the filing of this application will also be published in the Official Gazette.

After this decision is mailed, the application will be forwarded to the Office of Initial Patent Examination for further processing.

Telephone inquiries regarding this communication should be directed to the undersigned at (571) 272-3215.

Charlema R. Grant
Petitions Attorney
Office of Petitions

[1]This petition is properly treated under 37 CFR 1.47(a) since there is at least one signing inventor.

UNITED STATES PATENT AND TRADEMARK OFFICE

Commissioner for Patents
United States Patent and Trademark Office
P.O. Box 1450
Alexandria, VA 22313-1450
www.uspto.gov

Monte R. Rhodes
Locke Liddell & Sapp, LLP
600 Travis Street
Houston, TX 77002-3095

COPY MAILED

SEP 2 0 2006

OFFICE OF PETITIONS

In re Application of :
BLAIR : DECISION ON PETITION
Application No.: 10/708,149 :
Filed: February 11, 2004 : UNDER 37 CFR 1.137(b)
Attorney Docket No.: 021944-030US02 :

This is a decision on the petition under 37 CFR 1.137(b), filed January 9, 2006 to revive the above-entitled application.

The petition is **GRANTED**.

The above-identified application became abandoned for failure to file a proper reply in a timely manner to the non-final Office action mailed October 21, 2004, which set a period for reply of one (1) month. A response was not filed and no extensions of time under the provisions of 37 CFR 1.136(a) were obtained as indicated by the Notice of Abandonment mailed November 25, 2005. Accordingly, by operation of law, the above-identified application became abandoned on November 22, 2004.

The present petition satisfies the conditions for revival pursuant to the provisions of 37 CFR 1.137(b) in that (1) the reply in the form of an amendment and complete listing of the claims in response to the Office action mailed October 21, 2004; (2) the petition fee; and (3) the required statement of unintentional delay have been received. Accordingly, the reply to the Office action of October 21, 2004 is accepted as having been unintentionally delayed.

The application file is being referred to Technology Center AU 2838.

Telephone inquiries concerning this decision should be directed to the undersigned.

Derek A. Putonen
Attorney Advisor
(571) 272-3294

UNITED STATES PATENT AND TRADEMARK OFFICE

Commissioner for Patents
United States Patent and Trademark Office
P.O. Box 1450
Alexandria, VA 22313-1450
www.uspto.gov

Paper No. 090704

NAIPO (NORTH AMERICA INTERNATIONAL PATENT OFFICE)
P.O. Box 506
Merrifield, VA 22116

SEP 15 2004

In re Application of:
Yao-Ching Su et al.
Serial No.: 10/708,157
Filed: February 12, 2004
Attorney Docket No.: **AUOP0010USA0**

DECISION ON REQUEST TO WITHDRAW FROM RECORD

This is a decision on the request to withdraw as attorney of record under 37 C.F.R. § 1.36, filed May 18, 2004.

The request is **DISMISSED.**

The attorney/agent requesting withdrawal is not of record in the above-identified application. As such, the request must be dismissed.

Winston Hsu remains as attorney of record at this time.

All future communications from the Office will continue to be directed to the above address until otherwise notified by applicant.

Inquiries related to this decision should be directed to Clayton E. LaBalle at (571) 272-1594.

Clayton E. LaBalle, Special Programs Examiner
Technology Center 2800
Semiconductors, Electrical and Optical
Systems and Components

UNITED STATES PATENT AND TRADEMARK OFFICE

COMMISSIONER FOR PATENTS
UNITED STATES PATENT AND TRADEMARK OFFICE
P.O. BOX 1450
ALEXANDRIA, VA 22313-1450
www.uspto.gov

MAIL

NOV 0 8 2004

DIRECTOR OFFICE
TECHNOLOGY CENTER 2600

DALINA LAW GROUP, P.C.
7910 IVANHOE AVE. #325
LA JOLLA, CA 92037

In re Application of :
Rodnunsky :
Application No. 10/708,158 : DECISION ON PETITION
Filed: February 12, 2004 : TO MAKE SPECIAL
For: CABLING SYSTEM AND METHOD FOR :
FACILITATING FLUID THREE-DIMENSIOINAL :
MOVEMENT OF A SUSPENDED CAMERA

This is a decision on the petition filed February 12, 2004 under Manual of Patent Examination Procedure §708.02, VIII requesting accelerated examination.

The petition under Manual of Patent Examination Procedure §708.02, VIII, must:
(1) be filed prior to receiving any examination by the examiner,
(2) be accompanied by the required fee- $130,
(3) the claims should be directed to a single invention (if it is determined that the claims pertain to more than one invention, then applicant will have to make an election without traverse or forfeit accelerated examination status),
(4) state that a pre-examination search was made, and fully discuss the search method employed, such as classes and subclasses searched, publications, Chemical abstracts, patents, etc. A search made by a foreign patent office satisfies this requirement,
(5) be accompanied by a copy of each of the references most closely related to the subject matter encompassed by the claims if said references are not already of record,
(6) fully discuss the references, pointing out with the particularity required by 37 C.F.R. §1.111 (b) and (c), how the claimed subject matter is patentable over the references.

The petitioner meets all the above-listed requirements. Accordingly, the petition is **GRANTED**.

The application will retain its special status throughout its entire prosecution, including any appeal to the Board of Patent Appeals and Interferences, subject only to diligent prosecution by the applicant. The application file is being forwarded to the examiner for appropriate action in due course.

Kenneth A. Wieder
Special Program Examiner
Technology Center 2600
Communications
571-272-2986

UNITED STATES PATENT AND TRADEMARK OFFICE

Commissioner for Patents
United States Patent and Trademark Office
P.O. Box 1450
Alexandria, VA 22313-1450
www.uspto.gov
DRW Aug-05

FACTOR & LAKE, LTD
1327 W. WASHINGTON BLVD.
SUITE 5G/H
CHICAGO IL 606

COPY MAILED

AUG 0 1 2005

OFFICE OF PETITIONS

In re Application of :
Weiss et al. : DECISION ON PETITION
Application No. 10/708,183 :
Filed: 13 February, 2004 :
Atty Docket No. OST-041076 :

This is a decision on the paper filed on 23 June, 2005, which is treated as a petition under 37 CFR **1.55(a)(2)**, for entry of priority papers submitted after the date the issue fee was paid.

The petition is **granted**.

Receipt is acknowledged of papers submitted under 35 U.S.C. § 119.

Petitioner is advised that the rule affecting the submission of a claim for priority of a certified priority document under 37 CFR 1.55(a) was changed effective November 7, 2000. In effect, the Office will permit applicants to file a priority claim or certified priority document with the processing fee set forth in 37 CFR 1.17(i) between the date the issue fee is paid and the date a patent is issued. The Office will, however, merely place such submission in the application file but will not attempt to determine whether the applicant has met the conditions of 35 USC 119(a)-(d) to make the priority claim information in the text of the patent. In such a situation, the patent will not contain the priority claim information. The patentee may request a certificate of correction under 35 USC 255 and 1.323 and a determination of entitlement for such priority will be made after the patent is granted. See Federal Register/Vol. 65, No. 175, September 8, 2000, page 54622.

As the patent has already issued, petitioners may request a Certificate of Correction including the requested data pursuant to the provisions of 37 CFR 1.323.

Telephone inquiries specific to this matter should be directed to Senior Petitions Attorney Douglas I. Wood at (571) 272-3231.

Frances M. Hicks
Lead Paralegal
Office of Petitions
Office of the Deputy Commissioner
for Patent Examination Policy

SPE RESPONSE FOR CERTIFICATE OF CORRECTION

Paper No.: _____

DATE : 12/09/05

TO SPE OF : ART UNIT **2872**

SUBJECT : Request for Certificate of Correction on Patent No.: 10/708183 6912077

A response is requested with respect to the accompanying request for a certificate of correction.

Please complete this form and return with file, within **7** days to:
Palm location **7580, Certificates of Correction Branch – South Tower – 9A22**
If response is for an IFW, **return to employee (named below) via PUBSCofC Team in MADRAS.**
With respect to the change(s) requested, correcting Office and/or Applicant's errors, should the patent read as shown in the certificate of correction (COCIN)? No new matter should be introduced, nor should the scope or meaning of the claims be changed.

Thank You For Your Assistance

Angela Green
Certificates of Correction Branch
Tel. No. 703-305-9380 ext. 123

The request for issuing the above-identified correction(s) is hereby:
Note your decision on the appropriate box.

☒ **Approved**	**All** changes apply.
☐ **Approved in Part**	Specify below which changes **do not** apply.
☐ **Denied**	State the reasons for denial below.

Comments:

Need to update the Bib Data Sheet

DREW A. DUNN
SUPERVISORY PATENT EXAMINER

SPE

2872
Art Unit

PTO/SB/44 (04-05)
Approved for use through 04/30/2007. OMB 0651-0033
U.S. Patent and Trademark Office; U.S. DEPARTMENT OF COMMERCE
Under the Paperwork Reduction Act of 1995, no persons are required to respond to a collection of information unless it displays a valid OMB control number.
(Also Form PTO-1050)

UNITED STATES PATENT AND TRADEMARK OFFICE
CERTIFICATE OF CORRECTION

PATENT NO. : 6,912,077

APPLICATION NO.: 10/708,183

ISSUE DATE : June 28, 2005

INVENTOR(S) : Weiss et al.

It is certified that an error appears or errors appear in the above-identified patent and that said Letters Patent is hereby corrected as shown below:

Title page, INID code (63), replace "Continuation of application No. PCT/EP02/08695, filed on August 5, 2002" with --Continuation of application No. PCT/EP02/08695, filed on August 5, 2002, which claims priority to German patent application number 101 40 208.2, filed on August 16, 2001--.

MAILING ADDRESS OF SENDER (Please do not use customer number below):

FACTOR & LAKE, LTD.
1327 W. Washington Blvd., Suite 5G/H
Chicago, IL 60607

This collection of information is required by 37 CFR 1.322, 1.323, and 1.324. The information is required to obtain or retain a benefit by the public which is to file (and by the USPTO to process) an application. Confidentiality is governed by 35 U.S.C. 122 and 37 CFR 1.14. This collection is estimated to take 1.0 hour to complete, including gathering, preparing, and submitting the completed application form to the USPTO. Time will vary depending upon the individual case. Any comments on the amount of time you require to complete this form and/or suggestions for reducing this burden, should be sent to the Chief Information Officer, U.S. Patent and Trademark Office, U.S. Department of Commerce, P.O. Box 1450, Alexandria, VA 22313-1450. DO NOT SEND FEES OR COMPLETED FORMS TO THIS ADDRESS. **SEND TO: Attention Certificate of Corrections Branch, Commissioner for Patents, P.O. Box 1450, Alexandria, VA 22313-1450.**

If you need assistance in completing the form, call 1-800-PTO-9199 and select option 2.

DEC 5 2005

UNITED STATES PATENT AND TRADEMARK OFFICE

Commissioner for Patents
United States Patent and Trademark Office
P.O. Box 1450
Alexandria, VA 22313-1450
www.uspto.gov

Paper No. 092104

NAIPO (NORTH AMERICA INTERNATIONAL PATENT OFFICE)
P.O. Box 506
Merrifield, VA 22116

SEP 30 2004

In re Application of:
Chien-Sheng Yang
Serial No.: 10/708,199
Filed: February 16, 2004
Attorney Docket No.: **ADTP0086USA0**

DECISION ON REQUEST TO WITHDRAW FROM RECORD

This is a decision on the request to withdraw as attorney of record under 37 C.F.R. § 1.36, filed May 18, 2004.

The request is **DISMISSED.**

The attorney/agent requesting withdrawal is not of record in the above-identified application. As such, the request must be dismissed.

Winston Hsu remains as attorney of record at this time.

All future communications from the Office will continue to be directed to the above address until otherwise notified by applicant.

Inquiries related to this decision should be directed to Edward P. Westin at (703) 308-1638.

Edward Westin

Edward P. Westin, Special Programs Examiner
Technology Center 2800
Semiconductors, Electrical and Optical
Systems and Components

UNITED STATES PATENT AND TRADEMARK OFFICE

COMMISSIONER FOR PATENTS
UNITED STATES PATENT AND TRADEMARK OFFICE
P.O. BOX 1450
ALEXANDRIA, VA 22313-1450
www.uspto.gov

MAILED

JUN 08 2010

OFFICE OF PETITIONS

Robert G. Crouch, Esq.
8055 East Tufts Avenue, Suite 450
Denver, Colorado 80237

In re Patent No. 6,918,773 :
Issue Date: July 19, 2005 :
Application No. 10/708,208 : ON PETITION
Filed: February 17, 2004 :
For: CARD CONNECTOR :

This is a decision on the petition under 37 CFR 1.378(c), filed March 3, 2010, to accept the unintentionally delayed payment of a maintenance fee for the above-identified patent.

The petition is **GRANTED**.

This patent expired on July 19, 2009 for failure to pay the 3.5 year maintenance fee. Since this petition was submitted within twenty-four months after the six-month grace period provided in 37 CFR 1.362(e), the petition was timely filed under the provisions of 37 CFR 1.378(c).

The maintenance fee is hereby accepted and the above-identified patent is reinstated as of the mail date of this decision.

The fees due in connection with this petition total $2,620: $1,640.00 (surcharge) and $980.00 (3.5 year maintenance fee). As petitioner to date has submitted $4,240.00, the appropriate refunds have been requested on petitioner's behalf. Questions regarding refunds must be directed to the Finance Office, Refund Section.

There is no indication that the petition is signed by a registered patent attorney or patent agent of record. However, in accordance with 37 CFR 1.34, the signature of practitioner appearing on the correspondence shall constitute a representation to the United States Patent and Trademark Office that he is authorized to represent the particular party in whose behalf he acts. If practitioner desires to receive correspondence regarding this file, the appropriate power of attorney documents must be submitted. This decision is being mailed to practitioner, the petitioner herein. However, until otherwise instructed, all future correspondence regarding this application file will be directed solely to the above-noted correspondence address of record.

Telephone inquiries concerning this decision should be directed to the undersigned at (571) 272-3205.

The patent file is being forwarded to Files Repository.

/ALESIA M. BROWN/

Alesia M. Brown
Petitions Attorney
Office of Petitions

UNITED STATES PATENT AND TRADEMARK OFFICE

Commissioner for Patents
United States Patent and Trademark Office
P.O. Box 1450
Alexandria, VA 22313-1450
www.uspto.gov

JIANQ CHYUN INTELLECTUAL PROPERTY OFFICE
7 FLOOR-1, NO. 100
ROOSEVELT ROAD, SECTION 2
TAIPEI 100
TAIWAN

COPY MAILED

NOV 0 4 2005

OFFICE OF PETITIONS

In re Application of :
Chung-Che Yu, Bor-Yuh Chang and :
Shih-Chung Huang :
Application No. 10/708,212 :
Filed: February 17, 2004 :
Attorney Docket No. 11987-US-PA :

ON PETITION

This is a decision on the petition under 37 CFR 1.182, filed October 21, 2005 and October 27, 2005, to correct the names of the named inventors.

The petition is GRANTED.

The name of the first inventor will be changed from "Andre Yu" to -- YU, CHUNG-CHE --.

The name of the second inventor will be changed from "Jeffrey Chang" to -- CHANG, BOR-YUH --.

The name of the third inventor will be changed from "Bill Huang" to -- HUANG, SHIH-CHUNG --.

The file is being returned to Technology Center 2800 for further examination in due course.

Telephone inquiries concerning this matter may be directed to the undersigned at (571) 272-3228.

Edward J. Tannouse
Petitions Attorney
Office of Petitions/Patent
Office of the Deputy Commissioner
for Patent Examination Policy

UNITED STATES PATENT AND TRADEMARK OFFICE

Commissioner for Patents
United States Patent and Trademark Office
P.O. Box 1450
Alexandria, VA 22313-1450
www.uspto.gov

NOVAK DRUCE & QUIGG, LLP
1300 EYE STREET NW
400 EAST TOWER
WASHINGTON DC 20005

COPY MAILED

JUL 0 3 2006

OFFICE OF PETITIONS

In re Application of :
Lingman, et al. :
Application No. 10/708,213 : ON PETITION
Filed: February 17, 2004 :
Attorney Docket No. 00173.0050.PCUS00 :

This is a decision on the petition under 37 CFR 1.181, filed January 10, 2006, requesting that the Office withdraw the holding of abandonment of the above-identified application.

The petition under 37 CFR 1.181 is **DISMISSED**.

Any further petition to revive the above-identified application must be submitted within TWO (2) MONTHS from the mail date of this decision. Extensions of time under 37 CFR 1.136(a) are permitted. This is **not** final agency action within the meaning of 5 U.S.C. § 704.

This application was held abandoned for failure to respond in a timely manner to the non-final Office action, mailed July 8, 2004, which set forth an extendable 3 month period for reply. The Office contended that this application became abandoned on October 9, 2004 for failure to reply. A Notice of Abandonment was mailed on August 1, 2005.

Petitioners assert a reply was timely transmitted via facsimile to the Office on October 8, 2004. The Office has no record of receiving a reply. However, the copy of the "Certificate of Facsimile Transmission" affixed to the transmittal form submitted with the instant petition is itemized and contains a proper certificate of facsimile transmission citing an October 8, 2004 date of transmission.

Under 37 CFR 1.8(b), correspondence is considered timely filed if petitioners: supply (1) a copy of the previously transmitted correspondence with a signed certificate of transmission affixed thereto (2) a statement which attests on a personal knowledge basis to the previous timely transmission. A copy of the sending unit's report confirming transmission may be used to support this statement. Furthermore, under 37 CFR 1.8(c), the Office may require additional evidence to determine if the correspondence was timely filed.

Petitioners have not submitted a statement which attests on a personal knowledge basis to the previous timely transmission. In addition, please provide a statement explaining the October 8, 2004 e-mail from eFax.com to Daniel Hernandez.

Further correspondence with respect to this matter should be addressed as follows:

By mail: Mail Stop PETITION
Commissioner for Patents
Post Office Box 1450
Alexandria, VA 22313-1450

By hand: U.S. Patent and Trademark Office
Customer Service Window, Mail Stop Petition
Randolph Building
401 Dulany Street
Alexandria, VA 22314

By FAX: (571) 273-8300 - ATTN: Office of Petitions

Telephone inquiries pertaining to this matter may be directed to the undersigned at (571) 272-3230.

Shirene Willis Brantley

Shirene Willis Brantley
Senior Petitions Attorney
Office of Petitions
Office of the Deputy Commissioner
for Patent Examination Policy

UNITED STATES PATENT AND TRADEMARK OFFICE

COMMISSIONER FOR PATENTS
UNITED STATES PATENT AND TRADEMARK OFFICE
P.O. BOX 1450
ALEXANDRIA, VA 22313-1450
www.uspto.gov

TRACY W. DRUCE, ESQ.
NOVAK DRUCE & QUIGG LLP
1615 L STREET NW
SUITE 850
WASHINGTON, DC 20036

COPY MAILED

FEB 10 2005

OFFICE OF PETITIONS

In re Application of : DECISION ON PETITION
Robert Geary :
Application No. 10/708,217 :
Filed: February 17, 2004 :
Atty Docket No.: :
03130.0005.NPUS01 :

This is a decision on the Petition to Revive the Application based upon unintentional abandonment, filed December 29, 2004.

This Petition is hereby **granted**.

The above-identified application became abandoned for failure to reply in a timely manner to the Notice to File Missing Parts of Provisional Application (hereinafter "Notice"), mailed May 14, 2004. The Notice required the basic filing fee; an executed oath or declaration and a late filing fee oath or declaration surcharge, and additional claims fees. The Notice set a two (2) month period for reply from the mail date of the Notice, and also provided for extensions of time under 37 CFR 1.136(a). No reply having been received, the application became abandoned July 15, 2004. The mailing of this Decision precedes the mailing of a Notice of Abandonment.

Applicant files the instant petition, executed oath/declaration and the appropriate fees.

The application file is being referred to the Office of Initial Patent Examination for continued processing in due course.

Telephone inquiries concerning this matter should be directed to the undersigned at (571) 272-3232.

Derek L. Woods
Attorney/Advisor
Office of Petitions

UNITED STATES PATENT AND TRADEMARK OFFICE

Commissioner for Patents
United States Patent and Trademark Office
P.O. Box 1450
Alexandria, VA 22313-1450
www.uspto.gov

BRANDON N. SKLAR. ESQ. (PATENT PROSECUTION)
KAYE SCHOLER, LLP
425 PARK AVENUE
NEW YORK, NY 10022-3598

COPY MAILED

JUL 29 2008

OFFICE OF PETITIONS

In re Application of :
GEARY, Robert :
Application No. 10/708,217 : DECISION ON PETITION
Filed: February 17, 2004 : Under 37 CFR 1.137(b)
Attorney Docket No. **28231-1016** :

This is a decision on the petition under 37 CFR 1.137(b), filed June 18, 2007, to revive the above-identified application.

The petition is **GRANTED.**

The application became abandoned for failure to reply in a timely manner to the non-final Office action mailed, April 24, 2006, which set a shortened statutory period for reply of three (3) months. No extensions of time under the provisions of 37 CFR 1.136(a) were obtained. Accordingly, the application became abandoned on July 25, 2006.

The petition satisfies the requirements of 37 CFR 1.137(b) in that petitioner has supplied (1) the reply in the form of an amendment; (2) the petition fee of $1500; and (3) an adequate statement of unintentional delay.

The petition is not signed by an attorney of record. Nevertheless, in accordance with 37 CFR 1.34, the signature of Tracy W. Druce appearing on the correspondence shall constitute a representation to the United States Patent and Trademark Office that she is authorized to represent the particular party on whose behalf he acts. If Ms. Druce desires to receive future correspondence regarding this file, the appropriate power of attorney documents must be submitted. A courtesy copy of this decision is being mailed to petitioner herein. However, until otherwise instructed, all future correspondence regarding this application file will be directed solely to the above-noted correspondence address of record.

The application is being referred to Technology Center Art Unit 3772 for consideration of the amendment filed June 18, 2007.

Telephone inquiries concerning this decision should be directed to Monica A. Graves at (571) 272-7253.

Brian W. Brown
Petitions Examiner
Office of Petitions

cc: **TRACY W. DUCE**
1000 LOUISIANA STREET, FIFTY-THIRD FLOOR
HOUSTON, TX 77002

UNITED STATES PATENT AND TRADEMARK OFFICE

Commissioner for Patents
United States Patent and Trademark Office
P.O. Box 1450
Alexandria, VA 22313-1450
www.uspto.gov

FACTOR & LAKE
1327 W. WASHINGTON BLVD.
SUITE 5G/H
CHICAGO, IL 60607

COPY MAILED
MAY 0 8 2006
OFFICE OF PETITIONS

In re Application of	:	
Ashok V. Joshi et al	:	
Application No. 10/708,253	:	DECISION ON PETITION
Filed: February 19, 2004	:	TO WITHDRAW
Attorney Docket No. MIC-041018	:	FROM RECORD
	:	

This is a decision on the Request to Withdraw as attorney or agent of record under 37 C.F.R. § 1.36(b), filed August 22, 2005.

The petition is **NOT APPROVED** as moot.

A review of the file record indicates that the previously appointed power of attorney has been revoked by the assignee. Accordingly, the request to withdraw under 37 C.F.R. § 1.36(b) is moot.

All future communications from the Office will continue to be directed to the below-listed address until otherwise notified by applicants.

This application is being referred to Technology Center AU 3742 to await a reply to the final Office action mailed April 10, 2006.

Telephone inquires concerning this decision should be directed to Wan Laymon at 571-272-3220.

Denise Pothier
Petitions Examiner
Office of Petitions

cc: LOREN R. HULSE
CERAMATES, INC.
2425 SOUTH 900 WEST
SALT LAKE CITY, UT 84119

UNITED STATES PATENT AND TRADEMARK OFFICE

COMMISSIONER FOR PATENTS
UNITED STATES PATENT AND TRADEMARK OFFICE
P.O. BOX 1450
ALEXANDRIA, VA 22313-1450
www.uspto.gov

JUDGE PATENT FIRM
RIVIERE SHUKUGAWA 3RD FL.
3-1 WAKAMATSU-CHO
NISHINOMIYA-SHI, HYOGO 662-0-035 JP JAPAN

COPY MAILED
OCT 12 2005
OFFICE OF PETITIONS

Applicant: Tamagawa et al.
Appl. No.: 10/708,258
Filing Date: February 20, 2004
Title: FAN IMPELLER AND FAN MOTOR
Pub. No.: US 2004/0202540 A1
Pub. Date: October 14, 2004

This is a decision on the request for a corrected patent application publication under 37 CFR 1.221(b), filed on December 14, 2004, for the above-identified application.

The request is granted.

The corrected patent application publication will be published in due course, unless the patent issues before the application is republished.

The application papers (specification, claims and abstract) filed on February 20, 2004, via EFS were improperly printed by the Office. The papers have been reprinted and placed in the application image file wrapper (IFW) and the original papers have been marked as not entered.

Inquiries relating to this matter may be directed to Mark Polutta at (571) 272-7709 (voice).

Mark O. Polutta
Office of Patent Legal Administration
Office of the Deputy Commissioner
for Patent Examination Policy

UNITED STATES PATENT AND TRADEMARK OFFICE

Commissioner for Patents
United States Patent and Trademark Office
P.O. Box 1450
Alexandria, VA 22313-1450
www.uspto.gov

OLIVIA TOLAN
ALBIHNS AB
BOX 5581
VALHALLAVAGEN 117
STOCKHOLM, SWEDEN SE 114- 85

COPY MAILED

MAY 2 8 2009

OFFICE OF PETITIONS

In re Application of	:	
Kurt Andersson	:	DECISION ON PETITION
Application No. 10/708,259	:	TO WITHDRAW
Filed: February 20, 2004	:	FROM RECORD
Attorney Docket No. 73891	:	

This is a decision on the Request to Withdraw as attorney or agent of record under 37 C.F.R. § 1.36(b), filed June 29, 2006.

The request is **NOT APPROVED** because it is moot.

A review of the file record indicates that on July 19, 2006 the power of attorney to ALBIHNS AB was revoked by the assignee of the patent application. Accordingly, the request to withdraw under 37 C.F.R. § 1.36(b) is moot.

All future communications from the Office will be directed to the below-listed address until otherwise notified by applicant.

Telephone inquires concerning this decision should be directed to the undersigned at 571-272- 7751. All other inquires concerning either the examination or status of the application should be directed to the Technology Center.

Joan Olszewski
Petitions Examiner
Office of Petitions

cc: Harness, Dickey & Pierce, P.L.C.
P.O. Box 8910
Reston VA 20195

UNITED STATES PATENT AND TRADEMARK OFFICE

UNITED STATES DEPARTMENT OF COMMERCE
United States Patent and Trademark Office
Address: COMMISSIONER FOR PATENTS
P.O. Box 1450
Alexandria, Virginia 22313-1450
www.uspto.gov

INTERNATIONAL BUSINESS MACHINES CORPORATION
DEPT. 18G
BLDG. 321-482
2070 ROUTE 52
HOPEWELL JUNCTION, NY 12533

Mail Date: 04/20/2010

Applicant	: Mark Bilak	: DECISION ON REQUEST FOR
Patent Number	: 7577859	: RECALCULATION of PATENT
Issue Date	: 08/18/2009	: TERM ADJUSTMENT IN VIEW
Appliction No	: 10/708,270	: OF WYETH
Filed	: 02/20/2004	:
		:

The Patentee's Request for Recalculation is **DISMISSED.**

This Request is deemed ineligible for consideration for one or more of the following reasons:

(A). The patent for which PTA recalculation is requested is either a design or reissue application or is a reexamination proceeding;

(B). The patent for which PTA recalculation is requested resulted from a utility or plant application filed under 35 USC 111(a) before May 29, 2000 and no CPA filed in the application on/after May 29, 2000;

(C). The patent for which PTA recalculation is requested resulted from an international application in which the international filing date was before May 29, 2000 and no CPA filed in the application on/after May 29, 2000;

(D). The patent for which PTA recalculation is requested issued on/after March 2, 2010;

(E). The Request for Recalculation was filed more than 180 days after the grant date of the patent and the request was not filed within two months of a dismissal of a request for reconsideration of the of the patent term under 37 CFR 1.705(d);

(F). The Request for Recalculation is not solely limited to USPTO pre-Wyeth interpretation of 35 U.S.C. 154(b)(2)(A);

or

(G). A civil action was filed pursuant to 35 U.S.C. 154(b)(4)(A)concerning the same patent at issue in this request.

Patentee may file a reply to this decision dismissing the Request for Recalculation. Patentee must file such reply within one month or thirty days, whichever is longer, of the mail date of the decision dismissing the Request for Recalculation. No fee is required if patentee is asserting in the reply that the dismissal for ineligibility is improper.

Patentee should use document code PET.OP if electronically filing a reply to this dismissal. If the USPTO finds that the request was improperly deemed ineligible, the USPTO will mail applicant a recalculation determination.

Patentee should be aware that in order to preserve the right to review in the United States District Court for the District of Columbia of the USPTO patent term adjustment determination, patentee must ensure that he or she also take the steps required under 35 U.S.C. 154(b)(4)(A). Nothing in the request for recalculation should be construed as providing an alternative time frame for commencing a civil action under 35 U.S.C. 154 (b)(4)(A).

Any questions concerning this decision should be directed to the Office of Patent Legal Administration at 571-272-7702.

UNITED STATES PATENT AND TRADEMARK OFFICE

COMMISSIONER FOR PATENTS
UNITED STATES PATENT AND TRADEMARK OFFICE
P.O. BOX 1450
ALEXANDRIA, VA 22313-1450
www.uspto.go

MAIL

JUL 2 0 2004

DIRECTOR OFFICE
TECHNOLOGY CENTER 2600

NAIPO (NORTH AMERICA INTERNATIONAL PATENT OFFICE)
P.O. BOX 506
MERRIFIELD, VA 22116

Application No. 10/708,273

Filed: 2/20/04

DECISION ON REQUEST TO WITHDRAW AS ATTORNEY

This is a decision on the request to withdraw as attorney/agent of record filed on May 18, 2004.

A grantable request to withdraw as attorney/agent of record must do the following:
(1) indicate the present mailing address of the attorney(s)/agent(s) who seek(s) to withdraw, and
(2) be signed by each attorney/agent seeking to withdraw or clearly be signed on their behalf, and
(3) be *approved* at least thirty (30) days prior to the maximum extendable period for response to any outstanding Office Action, and
(4) indicate the address to which future correspondence should be mailed.

The Request to Withdraw as Attorney is **DISMISSED AS MOOT**.

The requester, Mr. Michael Mord Lewis, is not of record.

All future correspondence will continue to be directed to the address listed above until such a time as applicant properly notifies the Patent and Trademark Office of a change of address. The application is being returned to Technology Center 2600 central files to await action by the examiner in due course.

Krista Zele
Special Program Examiner
Technology Center 2600
Communications
(703) 305-4701

UNITED STATES PATENT AND TRADEMARK OFFICE

COMMISSIONER FOR PATENTS
UNITED STATES PATENT AND TRADEMARK OFFICE
P.O. BOX 1450
ALEXANDRIA, VA 22313-1450
www.uspto.gov

NORTH AMERICA INTERNATIONAL
PATENT OFFICE (NAIPC)
P.O. BOX 506
MERRIFIELD, VA 22116

COPY MAILED

MAY 18 2005

OFFICE OF PETITIONS

In re Application of	:	
Chiu et al.	:	
Application No. 10/708,284	:	DECISION
Filed: February 23, 2004	:	ON PETITION
Attorney Docket Number:	:	
REAP0014USA	:	

This is a decision on the Petition filed March 20, 2005, requesting cancellation of the above-identified application and a refund of the application filing fees. The petition is properly treated under 37 CFR 1.182.

The petition is **DISMISSED**.

Background

The application was filed using the Electronic Filing System ("EFS"). Applicant avers that an error occurred with the EFS server during filing of the above-identified application, such that the filing was incomplete. In support of this assertion, Applicant provides a copy of what is putatively an error message he received when attempting to file the above-identified application. Applicant avers that he re-filed the same application two-days later, and the filing was successful as evidenced by his Acknowledgement Receipt which included the application serial number, 10,708,327.

Three months later Applicant asserts that he received two filing receipts for the same application. Applicant requests a refund of the filing fees charged for filing the above-identified application.

Analysis and conclusion

A review of the error message Applicant filed in support of the petition reveals that the error message is illegible - the image is too dark to read.

Applicant must file a legible copy of the error message.

Further correspondence with respect to this matter should be addressed as follows:

By mail: Commissioner for Patents
PO Box 1450
Alexandria, VA 22313-1450

By FAX: (703) 872-9306
Attn: Office of Petitions

By hand: Customer Service Window
Randolph Building
401 Dulany Street
Alexandria, VA 22314

Telephone inquiries concerning this decision should be directed to the undersigned at (571) 272-3232.

Derek L. Woods
Attorney/Advisor
Office of Petitions

UNITED STATES PATENT AND TRADEMARK OFFICE

Commissioner for Patents
United States Patent and Trademark Office
P.O. Box 1450
Alexandria, VA 22313-1450
www.uspto.gov

NORTH AMERICA INTERNATIONAL
PATENT OFFICE (NAIPC)
P.O. BOX 506
MERRIFIELD, VA 22116

COPY MAILED

MAR 24 2006

OFFICE OF PETITIONS

In re Application of	:	
Chiu et al.	:	
Application No. 10/708,284	:	DECISION
Filed: February 23, 2004	:	ON PETITION
Attorney Docket Number:	:	
REAP0014USA	:	

This is a decision on the Response to Petition Decision Made on 5/18/2005, filed June 6, 2005, requesting cancellation of the above-identified application and a refund of the application filing fees. The petition is properly treated under 37 CFR 1.181.

The petition is **dismissed.**

Background

The application was filed using the Electronic Filing System ("EFS"). Applicant asserts that an error occurred with the EFS server during filing of the above-identified application, such that the filing was incomplete. Applicant filed a petition requesting cancellation of the application and a refund of the filing fees on March 20, 2005. In support of the petition, Applicant provided a copy of what was putatively an error message he received when attempting to file the above-identified application. Applicant avers that he re-filed the same application two-days later, and the filing was successful as evidenced by his Acknowledgement Receipt, which included the application serial number, 10/708,327.

Three months later Applicant asserts that he received two filing receipts for the same application. A review of the error message that Applicant had filed in support of the petition

revealed that the error message was illegible - the image was too dark to read.

The petition was dismissed in a Decision mailed May 18, 2005. Applicant was advised to file a legible copy of the error message.

The instant petition

With the instant petition, Applicant has filed a legible copy of the error message.

A review of Office records reveals that, although the first filing generated an error message, the application was received in this Office and assigned the above-identified application number.

STATUTE, REGULATION, AND EXAMINING PROCEDURE

35 U.S.C. § 2 provides, in part, that:

> The Commissioner...may, subject to the approval of the Secretary of Commerce, establish regulations, not inconsistent with law, for the conduct of proceedings in the Patent and Trademark Office.

35 U.S.C. § 41, Patent fees; patent and trademark search systems, states in pertinent part:

(a) The Director shall charge the following fees:

> (1) (A) On filing each application for an original patent, except in design or plant cases, $690[1].

35 USC § 42(d) provides that:

> The Commissioner may refund any fee paid by mistake or any amount paid in excess of that required.

[1] The application filing fee increased to $770.00 at the time the above-identified application was filed. See 37 CFR 1.17. Applicant also submitted the fee for recordation of an assignment, $40.00 under 37 CFR 1.21.

37 CFR 1.26(a) states in pertinent part that:

> The Director may refund any fee paid by actual mistake or in excess of that required. A change of purpose after the payment of a fee, such as when a party desires to withdraw a patent filing for which the fee was paid, including an application, an appeal, or a request for oral hearing, will not entitle a party to a refund of such fee. The Office will not refund amounts of twenty-five dollars or less unless a refund is specifically requested, and will not notify the payer of such amounts.

OPINION

Request for Refund

The applicable statute, 35 USC 42(d), authorizes the Commissioner to refund "any fee paid by mistake or any amount paid in excess of that required." Thus, the patent and Trademark Office (PTO) may refund: (1) a fee paid when no fee is required (*i.e.*, a fee paid by mistake), or (2) any fee paid in excess of the amount of the fee that is required. See Ex Parte Grady, 59 USPQ 276, 277 (Comm'r Pats. 1943)(the statutory authorization for the refund of fees is applicable only to a mistake relating to the fee payment). In the situation in which an applicant or patentee takes an action "by mistake" (e.g., files an application "by mistake"), the submission of fees required to take that action (e.g., a filing fee submitted with such application) is not a "fee paid by mistake" within the meaning of 35 U.S.C. § 42(d).

The Director is required, under 35 U.S.C. § 41, to charge an application filing fee. A review of the Office records reveals that the application was filed and processed in this Office, and an application serial number and filing date were accorded the application. Applicant submitted a filing fee and recordation of assignment fee, and received an application filing and a recorded assignment.

The applicable regulation, 37 CFR 1.26, requires that the money had to be paid by actual mistake, for a refund to be authorized. The mistake, however, must clearly be in relation to the payment itself in order to be refundable. Grady, supra. Here, the amount paid was owed at the time it was paid, and it was paid by the representative of the applicant. Such is not a mistake

within the meaning of the aforementioned statute and regulation that warrants a refund.

In this regard, there was no mistake relating to the payment itself. Petitioner is reminded that the use of "shall" appears in 35 USC § 41 pertaining to collection of fees upon the filing of an application with the PTO. It is well settled that the use of "shall" in a statute is the language of command, and where the directions of a statute are mandatory, strict compliance with the statutory terms is essential. Farrel Corp. v. U.S. Int'l Trade Comm'n, 942 F.2d 1147, 20 USPQ2d 1912 (Fed. Cir. 1991). That is, it is mandatory that the Director charge, and the applicant pay, the fees specified by statute upon presentation of a request for a service by the PTO. See BEC Pressure Controls Corp. v. Dwyer Instruments, Inc., 380 F.Supp. 1397, 1399, 182 USPQ 190, 192 (N.D. Ind. 1974). As such, the application and assignment recordation fees were due when such were submitted to the PTO on February 23, 2004, and were paid in the correct amount. Id. The language of the statute does not permit the Director any discretion with respect to charging the fees set forth therein. Id.

That Applicant may have presented the second application to the PTO does not warrant a finding that the payment was made "by mistake." Rather, the filing fee for the above-identified application was owed at the time it was paid. The payment of the fee automatically was due, by statute, when petitioner presented the aforementioned submission to the PTO for the filing of this application. Thus, it is immaterial to the question of "mistake" in payment of the instant application filing and recordation of assignment fees that petitioner may have re-submitted the fees to the PTO.

Petitioner requested that the filing fee be accepted for the filing of the application. The PTO is mandated by statute to collect the application filing fees. The subsequent re-filing of the application does not have the retroactive effect of making the previous payment an error or mistake. See Meissner v. U.S., 108 USPQ 6 (D.C. Cir. 1955)(appeal fee paid on same day that examiner allows the application is not a fee paid by mistake within the meaning of 35 USC 42(d)); see also Opinion of the Comptroller General of the United States, 113 USPQ 28, 29 (Comp. Gen. 1957). It follows that no refund is due.

Request for Cancellation of the above-identified application

Applicant requests cancellation of the above-identified application. A review of Office records reveals that an Office action was mailed on June 27, 2005. No response to the Office action having been filed, the application is abandoned for failing to timely and properly reply to the Office action. As such, cancellation of the application is a moot issue.

DECISION

In that Applicant has failed to establish the existence of a mistake in payment of the application filing fee within the meaning of the statute and regulation, no refund of the entire, or any fractional part thereof, is, or can be, authorized.

As the application is abandoned, cancellation of the application is moot.

Accordingly the petition is dismissed.

Further correspondence with respect to this matter should be addressed as follows:

By mail: Mail Stop PETITIONS
Commissioner for Patents
Post Office Box 1450
Alexandria, VA 22313-1450

By hand: Customer Service Window
Mail Stop Petitions
Randolph Building
401 Dulany Street
Alexandria, VA 22314

By fax: (571) 273-8300
ATTN: Office of Petitions

Any questions concerning this matter may be directed to the undersigned at (571) 272-3232.

Derek L. Woods
Attorney
Office of Petitions

SPE: ~~J. Calvert~~
G. Welch

SPE RESPONSE FOR CERTIFICATE OF CORRECTION

Paper No.: _____

DATE : 6/29/06

TO SPE OF : ART UNIT 3765

SUBJECT : Request for Certificate of Correction for Appl. No.: 10/708,313 Patent No.: 7020897

Please respond to this request for a certificate of correction within 7 days.

Please review the requested changes/corrections as shown in the **COCIN** document(s) in the IFW application image. No new matter should be introduced, nor should the scope or meaning of the claims be changed.

Please complete the response (see below) and forward the completed response to scanning using document code **COCX**.

Lamonte M. Newsome
Certificates of Correction Branch
703-308-9390 ext. 112

Thank You For Your Assistance

The request for issuing the above-identified correction(s) is hereby:
Note your decision on the appropriate box.

- [x] **Approved** — **All** changes apply.
- [ ] **Approved in Part** — Specify below which changes **do not** apply.
- [ ] **Denied** — State the reasons for denial below.

Comments: _____

[signature] 3765
SPE **Art Unit**

UNITED STATES PATENT AND TRADEMARK OFFICE

Commissioner for Patents
United States Patent and Trademark Office
P.O. Box 1450
Alexandria, VA 22313-1450
www.uspto.gov

Paper No. 080504

NAIPO (NORTH AMERICA INTERNATIONAL PATENT OFFICE)
P.O. Box 506
Merrifield, VA 22116

AUG 16 2004

In re Application of:	:	
YANG-EN WU	:	
Serial No.: 10/708,330	:	DECISION ON REQUEST TO WITHDRAW
Filed: February 24, 2004	:	FROM RECORD
Attorney Docket No.: **ADTP0096USA0**	:	

This is a decision on the request to withdraw as attorney of record under 37 C.F.R. § 1.36, filed May 18, 2004.

The request is **DISMISSED.**

The attorney/agent requesting withdrawal is not of record in the above-identified application. As such, the request must be dismissed.

Winston Hsu remains as attorney of record at this time.

All future communications from the Office will continue to be directed to the above address until otherwise notified by applicant.

Inquiries related to this decision should be directed to Lissi Marquis at (571) 272-1596.

Lissi Marquis, Special Programs Examiner
Technology Center 2800
Semiconductors, Electrical and Optical
Systems and Components

UNITED STATES PATENT AND TRADEMARK OFFICE

Commissioner for Patents
United States Patent and Trademark Office
P.O. Box 1450
Alexandria, VA 22313-1450
www.uspto.gov

Paper No. 080504

NAIPO (NORTH AMERICA INTERNATIONAL PATENT OFFICE)
P.O. Box 506
Merrifield, VA 22116

AUG 16 2004

In re Application of:	:	
CHIN-KUN HSIEH et al.	:	
Serial No.: 10/708,331	:	DECISION ON REQUEST TO WITHDRAW
Filed: February 24, 2004	:	FROM RECORD
Attorney Docket No.: **ADTP0071USA0**	:	

This is a decision on the request to withdraw as attorney of record under 37 C.F.R. § 1.36, filed May 18, 2004.

The request is **DISMISSED.**

The attorney/agent requesting withdrawal is not of record in the above-identified application. As such, the request must be dismissed.

Winston Hsu remains as attorney of record at this time.

All future communications from the Office will continue to be directed to the above address until otherwise notified by applicant.

Inquiries related to this decision should be directed to Lissi Marquis at (571) 272-1596.

Lissi Marquis, Special Programs Examiner
Technology Center 2800
Semiconductors, Electrical and Optical
Systems and Components

UNITED STATES PATENT AND TRADEMARK OFFICE

Commissioner for Patents
United States Patent and Trademark Office
P.O. Box 1450
Alexandria, VA 22313-1450
www.uspto.gov

Paper No. 082504

NAIPO (NORTH AMERICA INTERNATIONAL PATENT OFFICE)
P.O. Box 506
Merrifield, VA 22116

SEP 15 2004

In re Application of:	:	
YANG-EN WU	:	
Serial No.: 10/708,354	:	DECISION ON REQUEST TO WITHDRAW
Filed: February 26, 2004	:	FROM RECORD
Attorney Docket No.: **ADTP0092USA0**	:	

This is a decision on the request to withdraw as attorney of record under 37 C.F.R. § 1.36, filed May 18, 2004.

The request is **DISMISSED.**

The attorney/agent requesting withdrawal is not of record in the above-identified application. As such, the request must be dismissed.

Winston Hsu remains as attorney of record at this time.

All future communications from the Office will continue to be directed to the above address until otherwise notified by applicant.

Inquiries related to this decision should be directed to Clayton E. LaBalle at (571) 272-1594.

Clayton E. LaBalle, Special Programs Examiner
Technology Center 2800
Semiconductors, Electrical and Optical
Systems and Components

UNITED STATES PATENT AND TRADEMARK OFFICE

Commissioner for Patents
United States Patent and Trademark Office
P.O. Box 1450
Alexandria, VA 22313-1450
www.uspto.gov

COPY MAILED
OCT 02 2008

NUTTER MCCLENNEN & FISH LLP
WORLD TRADE CENTER WEST
155 SEAPORT BOULEVARD
BOSTON MA 02210-2604

In re Application of :
William Geissler et al :
Application No. 10/708,360 : DECISION ON PETITION
Filed: February 26, 2004 :
Attorney Docket No. 022956-0257 :

This is a decision on the petition filed February 25, 2008, which is being treated as a petition under 37 CFR 1.181 (no fee) requesting withdrawal of the holding of abandonment in the above-identified application.

Although, the petition was filed under 37 CFR 1.137(b) for revival of an application for patent abandoned unintentionally, the petition is styled as one filed under 37 CFR 1.181 for withdrawal of the holding of abandonment since no statement of unintentional abandonment or fee for a petition under 1.137(b) was provided. Further, petitioner appears to argue that the application abandonment was held in error.

The petition under 37 CFR 1.181 is **DISMISSED**.

Any request for reconsideration of this decision should be filed within two (2) months from the mail date of this decision. *Note* 37 CFR 1.181(f). The request for reconsideration should include a cover letter and be entitled as a "Renewed Petition under 37 CFR 1.181 to Withdraw the Holding of Abandonment."

This application was held abandoned for failure to timely provide corrected drawings on or before January 1, 2008, as required by the Notice of Allowability mailed October 1, 2007.

The Notice of Allowability mailed October 1, 2007 indicated that corrected drawings were required. Petitioner states that corrected drawings were filed on July 10, 2006. The corrected drawings filed July 10, 2006 were filed before the notice of Allowability and could not possibly be a response to the notice of Allowability which was mailed over a year later.

Accordingly, the petition requesting withdrawal of the holding of abandonment cannot be granted at this time.

If petitioner cannot supply the evidence necessary to withdraw the holding of abandonment, or simply does not wish to, petitioner should consider filing a petition under 37 CFR 1.137(b) stating that the delay was unintentional. Public Law 97-247, § 3, 96 Stat. 317 (1982), which revised patent and trademark fees, amended 35 U.S.C. § 41(a)(7) to provide for the revival of an "unintentionally" abandoned application without a showing that the delay in prosecution or in late payment of the issue fee was "unavoidable." This amendment to 35 U.S.C. § 41(a)(7) has been implemented in 37 CFR 1.137(b). An "unintentional" petition under 37 CFR 1.137(b) must be accompanied by the $ petition fee.

The filing of a petition under 37 CFR 1.137(b) cannot be intentionally delayed and therefore must be filed promptly. A person seeking revival due to unintentional delay cannot make a statement that the delay was unintentional unless the entire delay, including the date it was discovered that the application was abandoned until the filing of the petition to revive under 37 CFR 1.137(b), was unintentional. A statement that the delay was unintentional is not appropriate if petitioner intentionally delayed the filing of a petition for revival under 37 CFR 1.137(b).

Further correspondence with respect to this matter should be addressed as follows:

By Mail: Mail Stop PETITION
Commissioner for Patents
P. O. Box 1450
Alexandria, VA 22313-1450

By hand: U. S. Patent and Trademark Office
Customer Service Window, Mail Stop Petitions
Randolph Building
401 Dulany Street
Alexandria, VA 22314

By facsimile: **(571) 273-8300**
Attn: Office of Petitions

Telephone inquiries concerning this decision should be directed to Carl Friedman at (571) 272-6842.

Carl Friedman
Petitions Examiner
Office of Petitions

UNITED STATES PATENT AND TRADEMARK OFFICE

Commissioner for Patents
United States Patent and Trademark Office
P.O. Box 1450
Alexandria, VA 22313-1450
www.uspto.gov

NUTTER MCCLENNEN & FISH LLP
WORLD TRADE CENTER WEST
155 SEAPORT BOULEVARD
BOSTON MA 02210-2604

COPY MAILED

OCT 27 2008

OFFICE OF PETITIONS

In re Application of :
William Geissler et al. :
Application No. 10/708,360 : ON PETITION
Filed: February 26, 2004 :

This is a decision on the petition under 37 CFR 1.137(b), filed October 10, 2008, to revive the above-identified application.

The petition is **GRANTED**.

The above-identified application became abandoned for failure to submit corrected drawings in a timely manner in reply to the Notice of Allowability mailed October 1, 2007, which set a statutory period for reply of three (3) months. Accordingly, by operation of law, the above-identified application became abandoned on January 2, 2008.

The petition satisfies the conditions for revival pursuant to the provisions of 37 CFR 1.137(b) in that (1) the reply in the form of corrected drawings; (2) the petition fee of $1,620; and (3) the required statement of unintentional delay have been received. Accordingly, the corrected drawings are accepted as having been unintentionally delayed.

Telephone inquiries concerning this decision should be directed to Carl Friedman at (571) 272-6842.

The application file is being referred to the Office of Data Management.

Carl Friedman
Petitions Examiner
Office of Petitions

UNITED STATES PATENT AND TRADEMARK OFFICE

UNITED STATES DEPARTMENT OF COMMERCE
United States Patent and Trademark Office
Address: COMMISSIONER FOR PATENTS
P.O. Box 1450
Alexandria, Virginia 22313-1450
www.uspto.gov

FORD GLOBAL TECHNOLOGIES, LLC
FAIRLANE PLAZA SOUTH, SUITE 800
330 TOWN CENTER DRIVE
DEARBORN, MI 48126

Mail Date: 04/21/2010

Applicant	: Diana Yanakiev	: DECISION ON REQUEST FOR
Patent Number	: 7580786	: RECALCULATION of PATENT
Issue Date	: 08/25/2009	: TERM ADJUSTMENT IN VIEW
Appliction No	: 10/708,361	: OF WYETH AND NOTICE OF INTENT TO
Filed	: 02/26/2004	: ISSUE CERTIFICATE OF CORRECTION
		:

The Request for Recalculation is **GRANTED** to the extent indicated.

The patent term adjustment has been determined to be **1554** days. The USPTO will *sua sponte* issue a certificate of correction reflecting the amount of PTA days determined by the recalculation.

Prior to the issuance of the certificate of correction, the USPTO will afford patentee an opportunity to be heard and request reconsideration. Accordingly, patentee has **one month or thirty (30) days**, whichever is longer, to file a request for reconsideration of this patent term adjustment calculation. See 35 U.S.C. 154(b)(3)(B)(ii) and 37 CFR 1.322(a)(4). No extensions of time will be granted under 37 CFR 1.136.

Patentee should use document code PET.OP if electronically filing a request for reconsideration of this patent term adjustment calculation. The patentee must also include the information required by 37 CFR 1.705(b)(2) and the fee required by 37 CFR 1.18(e). If patentee does not file a timely request for reconsideration of this patent term adjustment calculation including the information required by 37 CFR 1.705(b)(2) and the fee required by 37 CFR 1.18(e), the USPTO will issue a certificate of correction reflecting the PTA determination noted above.

Patentee should be aware that in order to preserve the right to review in the United States District Court for the District of Columbia of the USPTO patent term adjustment determination, patentee must ensure that he or she also take the steps required under 35 U.S.C. 154(b)(4)(A) in a timely manner. Nothing in the request for recalculation should be construed as providing an alternative time frame for commencing a civil action under 35 U.S.C. 154(b)(4)(A).

Any questions concerning this decision should be directed to the Office of Patent Legal Administration at 571-272-7702.

UNITED STATES PATENT AND TRADEMARK OFFICE

Commissioner for Patents
United States Patent and Trademark Office
P.O. Box 1450
Alexandria, VA 22313-1450
www.uspto.gov

NOVAK, DRUCE, AND QUIGG L.L.P. (Volvo)
1000 LOUISIANA STREET
FIFTY-THIRD FLOOR
HOUSTON, TX 77002

COPY MAILED

SEP 0 4 2008

In re Application of	:	
Jan Lundgren	:	
Application No. 10/708,391	:	DECISION ON PETITION
Filed: February 27, 2004	:	
Attorney Docket No. 7589.156.PCUS00	:	

This is a decision on the petition under the unintentional provisions of 37 CFR 1.137(b), filed October 25, 2007, to revive the above-identified application.

The petition is **GRANTED**.

The application became abandoned for failure to timely file a reply within the meaning of 37 CFR 1.113 to the final Office action of October 25, 2006. The proposed reply required for consideration of a petition to revive must be a Notice of Appeal (and appeal fee required by 37 CFR 41.20(b)(2), an amendment that *prima facie* places the application in condition for allowance, a Request for Continued Examination and submission (37 CFR 1.114), or the filing of a continuing application under 37 CFR 1.53(b). See MPEP 711.03(c)(III)(A)(2). No extensions of time pursuant to the provisions of 37 CFR 1.136(a) were filed. Accordingly, the date of abandonment of this application is January 26, 2007. A Notice of Abandonment was mailed May 29, 2007.

The petition satisfies the requirements of 37 CFR 1.137(b) in that petitioner has supplied (1) the reply in the form of a Request for Continued Examination (RCE) and fee of $810.00, and the submission required by 37 CFR 1.114; (2) the petition fee of $1,540.00; and (3) a proper statement of unintentional delay.

Telephone inquiries concerning this decision should be directed to Joan Olszewski at (571) 272-7751.

This application is being referred to Technology Center AU 3726 for processing of the RCE and for appropriate action by the Examiner in the normal course of business on the amendment submitted in accordance with 37 CFR 1.114.

Liana Walsh
Petitions Examiner
Office of Petitions

UNITED STATES PATENT AND TRADEMARK OFFICE

Commissioner for Patents
United States Patent and Trademark Office
P.O. Box 1450
Alexandria, VA 22313-1450
www.uspto.gov

NOVAK DRUCE & QUIGG LLP
1300 EYE ST NW
SUITE 400 EAST
WASHINGTON DC 20005

COPY MAILED

JUN 1 4 2005

OFFICE OF PETITIONS

In re Application of :
Henne, et al. : DECISION ON PETITION
Application No. 10/708,404 :
Filed: March 1, 2004 :
Attorney Docket No. :
03130.0004.CPUS02

This is a decision on the petition filed April 6, 2005, pursuant to 37 CFR 1.137(b), to revive the above-identified application.

The petition is **GRANTED**.

The above-identified application became abandoned for failure to timely reply to the Notice to File Missing Parts, mailed May 19, 2004. This Notice set a period for reply of two months from the mail date of the Notice to submit an executed oath or declaration (and a surcharge for its late filing), and the statutory basic filing fee. No extensions of time under the provisions of 37 CFR 1.136(a) were obtained. No reply having been received, the above-identified application became abandoned on July 20, 2004. A Notice of Abandonment was mailed on February 18, 2005.

With the instant petition, petitioner paid the petition fee, made the proper statement of unintentional delay, and submitted the required items in response to the Notice to File Missing Parts.

The application file is being forwarded to the Office of Initial Patent Examination for pre-examination processing.

Telephone inquiries related to this decision should be directed to the undersigned at (571)272-3207.

Cliff Congo
Petitions Attorney
Office of Petitions

UNITED STATES PATENT AND TRADEMARK OFFICE

COMMISSIONER FOR PATENTS
UNITED STATES PATENT AND TRADEMARK OFFICE
P.O. BOX 1450
ALEXANDRIA, VA 22313-1450
www.uspto.gov

ANDREW M. CALDERON
GREENBLUM AND BERNSTEIN P.LC.
1950 ROLAND CLARKE PLACE
RESTON, VA 20191

COPY MAILED
MAY 15 2006
OFFICE OF PETITIONS

In re Application of :
Michael P. Belyansky, et al. :
Application No. 10/708,430 : ON PETITION
Filed: March 3, 2004 :
Attorney Docket No.: FIS920030245 :

This is a decision on the petition, filed May 11, 2006, under 37 CFR 1.313(c)(2) to withdraw the above-identified application from issue after payment of the issue fee.

The petition is **GRANTED**.

The above-identified application is withdrawn from issue for consideration of a submission under 37 CFR 1.114 (request for continued examination). See 37 CFR 1.313(c)(2).

Petitioner is advised that the issue fee paid on March 30, 2006, in the above-identified application cannot be refunded. If, however, the above-identified application is again allowed, petitioner may request that it be applied towards the issue fee required by the new Notice of Allowance. [1]

Telephone inquiries relating to this decision should be directed to the undersigned at (571) 272-3204.

The application is being referred to Technology Center AU 2818 for further processing of the request for continued examination under 37 CFR 1.114.

Sherry D. Brinkley
Petitions Examiner
Office of Petitions

[1]The request to apply the issue fee to the new Notice may be satisfied by completing and returning the new Issue Fee Transmittal Form PTOL-85(b), which includes the following language thereon: "Commissioner for Patents is requested to apply the Issue Fee and Publication Fee (if any) or re-apply any previously paid issue fee to the application identified above." Petitioner is advised that, whether a fee is indicated as being due or not, the Issue Fee Transmittal Form **must** be completed and timely submitted to avoid abandonment. Note the language in bold text on the first page of the Notice of Allowance and Fee(s) Due (PTOL-85).

UNITED STATES PATENT AND TRADEMARK OFFICE

Commissioner for Patents
United States Patent and Trademark Office
P.O. Box 1450
Alexandria, VA 22313-1450
www.uspto.gov

MOORE & VAN ALLEN PLLC
PO BOX 13706
RESEARCH TRIANGLE PARK NC 27709

COPY MAILED

JUN 23 2008

OFFICE OF PETITIONS

In re Application of	:	
Jonathan Deline	:	DECISION ON PETITION
Application No. 10/708,433	:	
Filed: March 3, 2004	:	
Docket No. U02-0189-35	:	

This is a decision on the petition to withdraw the holding of abandonment under 37 CFR 1.181, filed December 20, 2007.

The petition under 37 CFR 1.181 is **DISMISSED** as moot.

In light of the Office letter mailed May 20, 2008, vacating the previously mailed Notice of Abandonment, the instant petition is dismissed as moot.

The mater is being forwarded to Group Art Unit 2617 for consideration of the Appeal Brief filed September 12, 2007.

Telephone inquiries related to this decision should be directed to the undersigned at (571)272-3207.

Cliff Congo
Petitions Attorney
Office of Petitions

UNITED STATES PATENT AND TRADEMARK OFFICE

COMMISSIONER FOR PATENTS
UNITED STATES PATENT AND TRADEMARK OFFICE
P.O. BOX 1450
ALEXANDRIA, VA 22313-1450
www.uspto.gov

JJGJr: 08-04

Paper No: __

DARBY & DARBY P.C.
P. O. BOX 5257
NEW YORK NY 10150-5257

COPY MAILED

SEP 13 2004

OFFICE OF PETITIONS

In re Application of
Ohnemus, et al.
Application No. 10/708,441
Filed: 3 March, 2004
Attorney Docket No.: 20118/0200853-US0

DECISION ON PETITION

This is a decision on the response, considered as a petition, filed on 14 July, 2004, seeking to have accorded to the instant application a filing date of 3 March, 2004--notably, however, Petitioner alleges that the drawings found to be missing from the application "are not necessary for the understanding of the subject matter to be patented."

For the reasons set forth below, the petition is **GRANTED in part** and **DISMISSED in part**, and no petition fee is charged.

The application was deposited on 3 March, 2004.

On 27 May, 2004, the Office mailed a "Notice of Incomplete Nonprovisional Application" indicating that the application was filed without, *inter alia*, drawings as required under 35 U.S.C. §113 (first sentence) and that no filing date has been granted.

On 14 July, 2004, Petitioner replied submitting the instant petition, alleging electronic filing of the application with 32 sheets of drawings, and Petitioner also submitted copies of the drawings (32 sheets, Figs. 1 - 14D).

Petitioner response in the instant petition includes a statement that the drawings found to be missing from the application "are not necessary for the understanding of the invention" (Petition

at pages 1 - 2).

Thus, Petitioner contends, drawings are not necessary for the understanding of the subject matter to be patented.

It is the practice of the Office to treat an application that contains at least one process or method claim as an application for which a drawing is not necessary for the understanding of the invention under 35 U.S.C. §113 (first sentence). (See: MPEP §601.01[1])

This application contains method claims, e.g., claims 1 - 18. Therefore, the application should have been treated as an application filed without all of the drawing figures referred to in the specification as discussed in MPEP §601.01(g).[2]

---

[1] The commentary at MPEP §601.01 provides in pertinent part:

* * *

601.01(f) Applications Filed Without Drawings

35 U.S.C. 111(a)(2)(B) and 35 U.S.C. 111(b)(1)(B) each provide, in part, that an "application shall include . . . a drawing as prescribed by section 113 of this title" and 35 U.S.C. 111(a)(4) and 35 U.S.C. 111(b)(4) each provide, in part, that the "filing date . . . shall be the date on which . . . any required drawing are received in the Patent and Trademark Office." 35 U.S.C. 113 (first sentence) in turn provides that an "applicant shall furnish a drawing where necessary for the understanding of the subject matter sought to be patented.

Applications filed without drawings are initially inspected to determine whether a drawing is referred to in the specification, and if not, whether a drawing is necessary for the understanding of the invention. 35 U.S.C. 113 (first sentence).

It has been USPTO practice to treat an application that contains at least one process or method claim as an application for which a drawing is not necessary for an understanding of the invention under 35 U.S.C. 113 (first sentence). The same practice has been followed in composition applications.

* * *

A nonprovisional application having at least one claim, or a provisional application having at least some disclosure, directed to the subject matter discussed above for which a drawing is usually not considered essential for a filing date, not describing drawing figures in the specification, and filed without drawings will simply be processed for examination, so long as the application contains something that can be construed as a written description. A nonprovisional application having at least one claim, or a provisional application having at least some disclosure, directed to the subject matter discussed above for which a drawing is usually not considered essential for a filing date, describing drawing figure(s) in the specification, but filed without drawings will be treated as an application filed without all of the drawing figures referred to in the specification as discussed in MPEP § 601.01(g), so long as the application contains something that can be construed as a written description. In a situation in which the appropriate Technology Center (TC) determines that drawings are necessary under 35 U.S.C. 113 (first sentence) the filing date issue will be reconsidered by the USPTO.

* * *

[2] The commentary at MPEP §601.01 provides in pertinent part:

* * *

601.01(g) Applications Filed Without All Figures of Drawings

The Office of Initial Patent Examination (OIPE) reviews application papers to determine whether all of the figures of the drawings that are mentioned in the specification are present in the application. If the application is filed without all of the drawing figure(s) referred to in the specification, and the application contains something that can be construed as a written description, at least one drawing, if necessary under 35 U.S.C. 113 (first sentence), and, in a nonprovisional application, at least one claim, OIPE will mail a "Notice of Omitted Item(s)" indicating that the application papers so deposited have been accorded a filing date, but are lacking some of the figures of drawings described in the specification. The mailing of a "Notice of Omitted Item(s)" will permit the applicant to either: (1) promptly establish prior receipt in the USPTO of the drawing(s) at issue (generally by way of a date-stamped postcard receipt (MPEP § 503)); or (2) promptly submit the omitted drawing(s) in a nonprovisional application and accept the date of such submission as the application filing date. An applicant asserting that the drawing(s) was in fact deposited in the USPTO with the application papers must, within 2 months from the date of the "Notice of Omitted Item(s)," file a petition under 37 C.F.R. 1.53(e) with the petition fee set forth in 37 C.F.R. 1.17(h), along with evidence of such deposit (37 C.F.R. 1.181(f)). The petition fee will be refunded if it is determined that the drawing(s) was in fact received by the USPTO with the application papers deposited on filing.

* * *

It appears that a "Notice of Omitted Items" should have been mailed instead of the "Notice of Incomplete Nonprovisional Application."

Therefore, the 27 May, 2004, "Notice of Incomplete Nonprovisional Application" hereby is **vacated**.

The application is accorded a filing date of 3 March, 2004.

The petition is **granted in part**, to the extent that the application will be accorded the filing date of 3 March, 2004, without the 32 sheets of drawings containing Figures 1 - 14D as part of the original disclosure of the application; in all other respects the petition **is dismissed**.

The application file is being released to the Office of Initial Patent Examination for further processing with a corrected filing date of 3 March, 2004, indicating in the Office records that "0" sheets of drawings were present on filing, and the mailing of a corrected filing receipt.

Telephone inquiries concerning this decision may be directed to the undersigned at (703)305-9199.

John J. Gillon, Jr.
Senior Attorney
Office of Petitions

UNITED STATES PATENT AND TRADEMARK OFFICE

Commissioner for Patents
United States Patent and Trademark Office
P.O. Box 1450
Alexandria, VA 22313-1450
www.uspto.gov

Paper No.

Philmore H. Colburn II
Cantor Colburn LLP
55 Griffin Road South
Bloomfield, CT 06002

COPY MAILED

SEP 2 4 2004

OFFICE OF PETITIONS

In re Application of :
Michael Tobin, Timothy Richter, :
Hemant Mody, Michael Ronzello and : DECISION REFUSING STATUS
Dean Robarge : UNDER 37 C.F.R. § 1.47(a)
Application No. 10/708,448 :
Filed: March 4, 2004 :
Attorney Docket No. 41PR-133546 :
(GEN-0350) :
Title: METHOD AND APPARATUS FOR :
MAGNETICALLY TRIPPING CIRCUIT :
BREAKERS :

This is in response to the "PETITION UNDER 37 CFR 1.47(a) IN LIEU OF INVENTOR'S SIGNATURE," filed August 2, 2004.

The petition is **DISMISSED**.

Rule 47 applicants are given **TWO MONTHS** from the mailing date of this decision to reply, correcting the below-noted deficiencies. Any reply should be entitled "Request for Reconsideration of Petition Under 37 C.F.R. § 1.47(a)," and should only address the deficiencies noted below, except that the reply may include an oath or declaration executed by the non-signing inventor. **Failure to respond will result in abandonment of the application.** Any extensions of time will be governed by 37 C.F.R. § 1.136(a).

The above-identified application was filed on March 4, 2004, without a declaration executed by all of the joint inventors, except inventors Hemant Moody and Michael Ronzello. Accordingly, on May 21, 2004, applicants were mailed a "Notice to File Missing Parts of Nonprovisional Application - Filing Date Granted (Notice)," requiring the signatures of those inventors on a declaration and the surcharge for its late filing. This Notice set a two-month period for reply with extensions of time obtainable under § 1.136(a).

In response, applicants filed a declaration with the signature of inventor Ronzello; the surcharge under § 1.16(e); and the instant petition under § 1.47(a). This response was made timely by an accompanying petition for extension of time within the first month. Applicants assert that status under § 1.47(a) is proper because inventor Mody refuses to join in the application. In support thereof, applicants submitted the declaration of attorney David Arnold.

A grantable petition under 37 CFR § 1.47(a) requires: (1) proof that the non-signing inventor cannot be reached or found, after diligent effort, or refuses to sign the oath or declaration after having been presented with the application papers (specification, claims and drawings); (2) an acceptable oath or declaration in compliance with 35 U.S.C. §§115 and 116; (3) the petition fee; and (4) a statement of the last known address of the non-signing inventor. The instant petition does not satisfy requirements (1) and (2).

As to requirement (1), petitioner has not shown that inventor Mody has refused to join in the application as required by § 1.47. Before a refusal can be alleged, applicants must demonstrate that a *bona fide* attempt was made to present a copy of the application papers (specification, including claims, drawings, and oath or declaration) to the non-signing inventor. See MPEP 409.03(d). A refusal by an inventor to sign an oath or declaration when the inventor has not been presented with the application papers does not itself suggest that the inventor is refusing to join the application unless it is clear that the inventor understands exactly what he or she is being asked to sign and refuses to accept the application papers. It is reasonable to require that the inventor be presented with the application papers before a petition under 37 CFR 1.47 is granted since such a procedure ensures that the inventor is apprised of the application to which the oath or declaration is directed. *In re Gray*, 115 USPQ 80 (Comm'r Pat. 1956). Petitioners have not provided evidence that the application papers (specification, including claims, drawings, and oath or declaration) were all presented to inventor Mody for his signature. The declaration of attorney David Arnold indicates that only the Declaration and Assignment were presented to inventor Mody for signature.

Thus, on renewed petition, applicants must establish that the entire application package, including specification, claims and drawings, was presented to non-signing inventor Mody (or to his attorney) and he subsequently refused to sign. If they have not already been sent, a copy of the application papers should be sent to the last known address of the non-signing inventor, or, if the inventor is represented by counsel, to the address of the non-signing inventor's attorney. Documentary evidence, including copies of the transmittal cover letters and return mail receipts, should be made part of the record.

As to requirement (2), the declaration does not appear to include a proper citizenship for inventor Mody. His citizenship is stated as "Indian." Pursuant to 35 U.S.C. 115, each inventor shall state of what country he is a citizen. As citizenship is a statutory requirement, this requirement cannot be waived.

Further correspondence with respect to this decision should be addressed as follows:

By mail: Mail Stop Petition
Commissioner for Patents
P.O. Box 1450
Alexandria, VA 22313-1450

By FAX: (703) 872-9306
ATTN: NANCY JOHNSON

By hand: Effective June 5, 2004, patent correspondence delivered by hand or delivery services, **other than the USPS**, to the Customer Window must be addressed as follows:

U.S. Patent and Trademark Office
220 20th Street S.
Customer Window, Mail Stop _____
Crystal Plaza Two, Lobby, Room 1B03
Arlington, VA 22202

Telephone inquiries related to this decision may be directed to the undersigned at (703) 305-0309 (or effective September 28, 2004 at (571) 272-3219).

Nancy Johnson
Senior Petitions Attorney
Office of Petitions

UNITED STATES PATENT AND TRADEMARK OFFICE

Commissioner for Patents
United States Patent and Trademark Office
P.O. Box 1450
Alexandria, VA 22313-1450
www.uspto.gov

Paper No.

Philmore H. Colburn II
Cantor Colburn LLP
55 Griffin Road South
Bloomfield, CT 06002

COPY MAILED

DEC 2 0 2004

OFFICE OF PETITIONS

In re Application of
Michael Tobin, Timothy Richter, Hemant Mody, Michael Ronzello and Dean Robarge
Application No. 10/708,448
Filed: March 4, 2004
Attorney Docket No. 41PR-133546 (GEN-0350)
Title: METHOD AND APPARATUS FOR MAGNETICALLY TRIPPING CIRCUIT BREAKERS

DECISION ACCORDING STATUS UNDER 37 C.F.R. § 1.47(a)

This is in response to the "REQUEST FOR RECONSIDERATION OF PETITION UNDER 37 CFR 1.47(a)," filed November 22, 2004.

The petition is **GRANTED**.

The above-identified application was filed on March 4, 2004, without a declaration executed by all of the joint inventors. In response to the "Notice to File Missing Parts of Nonprovisional Application - Filing Date Granted (Notice)," mailed May 21, 2004, on August 2, 2004, applicants filed the initial petition.

However, the petition was dismissed for failure to show that inventor Mody had refused to join in the application and for failure to submit an acceptable declaration. Petitioner had not demonstrated that a *bona fide* attempt had been made to present a copy of all of the application papers (specification, including claims, drawings, and oath or declaration) to the non-signing inventor. The declaration did not appear to include a proper citizenship for inventor Mody.

Rule 47 applicants timely filed the instant renewed petition. In support of the request for reconsideration, applicants submitted a supplemental declaration of attorney David Arnold, which attests to having sent inventor Mody, the entire application package with a declaration for signature; a copy of the cover letter transmitting the application papers to inventor Mody; a Memo to File written by the assistant to the attorney, Mary Forcier, documenting her conversation with inventor Mody about having received the mailing; a copy of an email from FedEx to Ms. Forcier, noting delivery of the express mail package to

inventor Mody; and a copy of an email from Scott Lucas to attorney Arnold, stating that "I understand from Hemant that at this time he will not be signing anything."

In addition, applicants submitted a declaration executed by inventors Tobin, Richter, Ronzello and Robarge on behalf of themselves and on behalf of non-signing inventor Mody. The declaration included inventor Mody's citizenship.

The petition is now in compliance with 37 C.F.R. §1.47(a). The declaration filed November 22, 2004 is in compliance.

This application is hereby accorded Rule 1.47(a) status.

As provided in new Rule 1.47(c), this Office will forward notice of this application's filing to the non-signing inventor at the address given in the petition. Notice of the filing of this application will also be published in the Official Gazette.

The application will be forwarded to Technology Center 2832 for examination in due course.

Telephone inquiries regarding this decision should be directed to the undersigned at (571) 272-3219.

Nancy Johnson
Senior Petitions Attorney
Office of Petitions

14 SEP 2004

UNITED STATES PATENT AND TRADEMARK OFFICE

COMMISSIONER FOR PATENTS
UNITED STATES PATENT AND TRADEMARK OFFICE
P.O. BOX 1450
ALEXANDRIA, VA 22313-1450
www.uspto.gov

1 / 2004

23372
TAYLOR, RUSSELL & RUSSELL, P.C.
4807 Spicewood Springs Road
Building Two, Suite 250
Austin, TX 78759

In re Application of
HENDERSON, Timothy David Robert
U.S. Application No.: 10/708,471
Filing Date: 05 March 2004
Attorney Docket No.: 800769
For: RESILIENT ELASTOMERIC STRUCTURE

DECISION ON PETITION TO CONVERT

This decision is in response to applicants' "Petition to Treat Application as filed Under 35 U.S.C. 371" filed on 09 June 2004 which is treated as a request to convert the above-captioned application to a national stage application of PCT/GB02/04050 pursuant to 35 U.S.C. 371. The $130.00 fee has been charged to petitioner's credit card as authorized.

A review of the above-captioned application file verifies that it was properly processed under 35 U.S.C. 111(a). Applicant filed the above-captioned application using the Electronic Filing System (EFS) on 05 March 2004. A national stage filing under 35 U.S.C. 371 using the EFS is not allowed at this time.[1] Accordingly, the application was properly processed as a filing under 35 U.S.C. 111(a).

Nonetheless, applicant's petition to convert the application to a national stage filing will be considered. U.S. Statutes and Regulations do not make specific provision for the requested action and as such the Office does not grant such petitions for conversion as a mere matter of course. The Office will **only** grant such petitions upon a showing by applicant of sufficient cause (*e.g.*, the loss of patent rights) where **no** other remedy is available.

In the present petition, applicants have not made a showing that a loss of patent rights would occur if the above-captioned application is a filing under 35 U.S.C. § 111(a).

---

[1] See Electronic Filing System - Frequently Asked Questions (FAQs) (http://www.uspto.gov/ebc/efs/faq/whattype.htm#eight)

> **May I electronically file an international application under 35 U.S.C. 371 National stage?**
>
> At this time EFS does not provide all the capabilities needed to author, submit and initially process electronic documents and attachments required for a complete 35 U.S.C. 371 National stage filing . . .

According, the present petition is **DISMISSED** for lack of showing of sufficient cause.

If reconsideration on the merits of this petition is desired, a proper response must be filed within **TWO (2) MONTHS** from the mail date of this decision. No additional petition fee is required.

This application is being forwarded to OIPE for further processing under 35 U.S.C. 111(a).

James Thomson
Attorney Advisor
Office of PCT Legal Administration

Tel.: (703) 308-645;
(571) 273-3302 (after 30 September 2004)

To/ James Thompson

Request for Legal Staff Consideration

Serial No. _____ Date : _____

Request : ☐ Petition To Revive Unintentionally Abn. Appl. ☐ Petition under Rule 1.47

☒ Other : PoA

Requestor : _____ Supervisor : _____

Response : _____ Response :

By : _____ Date : _____

4807 Spicewood Springs Road
Building 2, Suite 250
Austin, Texas 78759
Phone: (512) 338-4601
Fax: (512) 338-4651

Taylor Russell & Russell, P.C.
Intellectual Property Attorneys and Counselors at Law

This message is intended only for use by the individual or entity to which it is addressed and contains privileged or confidential information. If the reader of this message is not the intended recipient, you are hereby notified that any dissemination, distribution or copying of this communication may be illegal and is strictly prohibited. If you have received this communication in error, please notify us immediately by telephone, and return the original message to us via the US Postal Service at the address listed above. Thank you.

Fax

To: PCT LEGAL OFFICE
MAIL STOP PCT
COMMISSIONER FOR PATENTS

From: Douglas D. Russell

Fax: 703-308-6459

Date: 6/9/2004 **Time:** 1:08pm CST

Re: Petition to PCT Legal Office
U.S. National Stage
Patent Application No. 10/708,471
Filed: March 5, 2004

Pages: 17, including this cover sheet

RECEIVED
09 JUN 2004
Legal Staff
International Division

09/14/2004 CSHOOT 00000007 10708471

01 FC:1460 130.00 OP

IN THE UNITED STATES PATENT AND TRADEMARK OFFICE

Application Number: 10/708,471	
Applicant: Henderson, Timothy David Robert	Group Art Unit:
Title: Resilient Elastomeric Structure	Examiner:
Date Filed: March 5, 2004	
Attorney Docket No.: 800769	

PETITION TO TREAT APPLICATION AS FILED UNDER 35 U.S.C. 371

VIA FACSIMILE 703-308-6459

Attention: PCT Legal Staff
Mail Stop PCT
Commissioner for Patents
P.O. Box 1450
Alexandria, VA 22313-1450

Dear Sirs:

On March 5, 2004, we electronically filed the subject national stage application under 35 U.S.C. 371 of PCT/USGB02/04050, after confirming with the USPTO's Electronic Business Center that it would be received as a national stage application under 35 U.S.C. 371. Otherwise, we would have filed on paper with the PCT Office.

On June 7, 2004, we received a filing receipt from the Office of Initial Patent Examination, which included a Notice Regarding Benefit/Priority Claim(s), indicating that the benefit claim was improper and that the Patent Office had changed the status of the application from one filed under 35 U.S.C 371 to one filed under 35 U.S.C. 111(a). On June 9, 2004, we were informed through the PCT Help Desk that the status of the application had been changed because the application was not processed by the PCT Office.

Applicant respectfully requests the PCT Legal Office to treat subject application number 10/708,471 as the national stage commencement filed under 35 U.S.C. 371 of international application number PCT/GB02/04050 filed 6 September 2002, instead of one filed under 111(a).

Attached please find the following supporting documents: USPTO's Acknowledgement Receipt of the application filing, Application Data Sheet stating the continuing data, Declaration signed by Applicant, and the first page of the specification. We

have also attached the USPTO's Filing Receipt and Notice Regarding Benefit/Priority Claims(s).

Also attached is credit card payment form authorizing the $130 fee for this petition.

Date: June 9, 2004

Respectfully submitted,

Douglas D. Russell, Reg. No. 40152
Attorney for Applicant

TAYLOR RUSSELL & RUSSELL, P.C.
4807 Spicewood Springs Road
Building 2, Suite 250
Austin, Texas 78759-8444
512-338-4601
512-338-4651 (Fax)

Certificate of Transmission / Mailing

I hereby certify that this correspondence is being facsimile transmitted to the USPTO at number 703-308-6459, or deposited with the United States Postal Service with sufficient postage as first class mail in an envelope addressed to: Commissioner for Patents, P.O. Box 1450, Alexandria, VA 22313-1450, on the date shown below:

June 9, 2004
Date

Ellen Huffman
Signature: Ellen Huffman

****
*** RX REPORT ***
****

RECEPTION OK

TX/RX NO	6669
RECIPIENT ADDRESS	5123384651
DESTINATION ID	
ST. TIME	06/09 14:10
TIME USE	07'12
PGS.	17
RESULT	OK

UNITED STATES PATENT AND TRADEMARK OFFICE
ACKNOWLEDGEMENT RECEIPT

Electronic Version 1.1
Stylesheet Version v1.1.1

Title of Invention	Resilient Elastomeric Structure

Submission Type: Utility Patent Filing

Application Number: 10/708471 *10/708471*

EFS ID: 56657

Server Response:

Confirmation Code	Message
ISVR1	Submission was successfully submitted - Even if Informational or Warning Messages appear below, please do not resubmit this application
ICON1	2470

First Named Applicant: Timothy Henderson

Attorney Docket Number: 800769

Timestamp: 2004-03-05 15:39:08 EDT

From: us

File Listing:

Doc. Name	File Name	Size (Bytes)
us-request	769-usrequ.xml	3245
us-request	us-request.dtd	19064
us-request	us-request.xsl	33300
us-declaration	769-usdecl.xml	735
us-declaration	us-declaration.dtd	3833
us-declaration	us-declaration.xsl	10015
us-fee-sheet	769-usfees.xml	1550
us-fee-sheet	us-fee-sheet.xsl	24912
us-fee-sheet	us-fee-sheet.dtd	11069
application-body	spec769-trans.xml	31926
application-body	us-application-body.xsl	83497

application-body	application-body.dtd	49498
application-body	wipo.ent	4956
application-body	mathml2.dtd	54588
application-body	mathml2-qname-1.mod	13225
application-body	isoamsa.ent	5191
application-body	isoamsb.ent	3988
application-body	isoamsc.ent	1460
application-body	isoamsn.ent	5620
application-body	isoamso.ent	1934
application-body	isoamsr.ent	7073
application-body	isogrk3.ent	3559
application-body	isomfrk.ent	4553
application-body	isomopf.ent	2571
application-body	isomscr.ent	4628
application-body	isotech.ent	5268
application-body	isobox.ent	3568
application-body	isocyr1.ent	5345
application-body	isocyr2.ent	2504
application-body	isodia.ent	1508
application-body	isolat1.ent	5282
application-body	isolat2.ent	9007
application-body	isonum.ent	5913
application-body	isopub.ent	6621
application-body	mmlextra.ent	7901
application-body	mmlalias.ent	38209
application-body	soextblx.dtd	12870
application-body	sheet1of5.tif	21716
application-body	sheet2of5.tif	14228
application-body	sheet3of5.tif	30568
application-body	sheet4of5.tif	15848
application-body	sheet5of5.tif	9904
package-data	769-pkda.xml	7833
package-data	package-data.dtd	27025

package-data	us-package-data.xsl	19263
	Total files size	636371

Message Digest: de2f9488ededf51f1c33e4d0fc71aecf7a03c6e9

Digital Certificate Holder Name: cn=Douglas D. Russell,ou=Registered Attorneys,ou=Patent and Trademark Office,ou=Department of Commerce,o=U.S. Government,c=US

UNITED STATES PATENT AND TRADEMARK OFFICE

UNITED STATES DEPARTMENT OF COMMERCE
United States Patent and Trademark Office
Address: COMMISSIONER FOR PATENTS
P.O. Box 1450
Alexandria, Virginia 22313-1450
www.uspto.gov

APPLICATION NUMBER	FILING OR 371 (c) DATE	FIRST NAMED APPLICANT	ATTY. DOCKET NO./TITLE
10/708,471	03/05/2004	Timothy David Robert Henderson	800769

CONFIRMATION NO. 2470

OC000000012869914

23372
TAYLOR RUSSELL & RUSSELL, P.C.
4807 SPICEWOOD SPRINGS ROAD
BUILDING TWO SUITE 250
AUSTIN, TX 78759

Date Mailed: 06/04/2004

Notice Regarding Benefit/Priority Claim(s)

☐ **Improper Benefit Claim(s) to Prior-Filed Nonprovisional Application(s)**

The benefit claim(s) to prior-filed nonprovisional application(s) is improper because there is no specific reference for each prior-filed application that includes: (1) the identification of the prior-filed application by application number, or international application number and international filing date; and (2) a clear indication the relationship (i.e., continuation, divisional, or continuation-in-part) of the nonprovisional applications. For example, applicant should amend the specification to include a specific reference, such as "This application is a continuation of Application No. 10/---,--- filed ---." in the first sentence of the specification following the title.

Applicant should review each benefit claim submitted and, if appropriate, provide the proper reference to the prior-filed application(s) as required by 37 CFR 1.78. A proper relationship includes an identification of each nonprovisional application as a continuation, divisional or continuation-in-part application of the immediate prior-filed nonprovisional application for which a benefit is claimed under 37 CFR 1.78 in order to establish copendency throughout the entire chain of prior-filed applications. The specific reference must be included in the domestic priority information section of an application data sheet (37 CFR 1.76), or the specification must contain, or be amended to contain, such reference in the first sentence following the title.

Timeliness: The required reference for each benefit claim must be filed during the pendency of the instant application and within the later of: (1) four months from the actual filing date of the instant application, or the national stage commencement date if the instant application is a national stage application under 35 U.S.C. 371; or (2) sixteen months from the filing date of the prior-filed application. Failure to timely file the required reference is considered a waiver of any benefit claim, unless a grantable petition to accept an unintentionally delayed claim under 37 CFR 1.78(a), the surcharge set forth in 37 CFR 1.17(t), and the required reference are filed. See 37 CFR 1.78(a).

☑ **Improper Benefit Claim(s) to Prior-Filed Nonprovisional Application(s)**

The benefit claim(s) to prior-filed provisional application(s) is improper because the instant

application was not filed within twelve (12) months from the filing date of the provisional application, and there is no indication of an intermediate nonprovisional application that is directly claiming the benefit of the provisional application and filed within 12 months of the filing date of the provisional application. For example, applicant should amend the specification to include a specific reference, such as "This application is a continuation of Application No. 10/---,--- filed ---, which claims the benefit of U.S. Provisional Application No. 60/---,--- filed---." in the first sentence of the specification following the title.

Applicant should review each benefit claim submitted and, if appropriate, provide the proper reference to the prior-filed applications (including an indication of any intermediate nonprovisional application that is directly claiming the benefit of the provisional application and filed with 12 months of the filing date of the provisional application) as required by 37 CFR 1.78. The required reference must be included in the domestic priority information section of an application data sheet (37 CFR 1.76), or the specification must contain, or be amended to contain, such reference in the first sentence following the title.

Timeliness: The required reference for each benefit claim must be filed during the pendency of the instant application and within the later of: (1) four months from the actual filing date of the instant application, or the national stage commencement date if the instant application is a national stage application under 35 U.S.C. 371; or (2) sixteen months from the filing date of the prior-filed application. Failure to timely file the required reference is considered a waiver of any benefit claim, unless a grantable petition to accept an unintentionally delayed claim under 37 CFR 1.78(a), the surcharge set forth in 37 CFR 1.17(t), and the required reference are filed during the pendency of the instant application.

☐ **Improper Priority Claim(s) to Prior-Filed Foreign Application(s)**

The instant application was not filed within twelve (12) months from the filing date of the prior-filed foreign application, and there is no benefit claim to an intermediate nonprovisional application filed within 12 months of the filing date of the foreign application. Applicant should review each priority claim submitted and, if appropriate, provide the proper reference to any intermediate nonprovisional application filed within 12 months of the filing date of the foreign application in compliance with 37 CFR 1.78, or delete the priority claim. The required reference to an intermediate nonprovisional application must be included in the domestic priority information section of an application data sheet (37 CFR 1.76), or the specification must contain, or be amended to contain, such reference in the first sentence following the title.

Timeliness: The required reference for the benefit claim to an intermediate nonprovisional application must be filed during the pendency of the instant application and within the later of: (1) four months from the actual filing date of the instant application, or the national stage commencement date if the instant application is a national stage application under 35 U.S.C. 371; or (2) sixteen months from the filing date of the prior-filed application. Failure to timely file the required reference is considered a waiver of any benefit claim, unless a grantable petition to accept an unintentionally delayed claim under 37 CFR 1.78(a), the surcharge set forth in 37 CFR 1.17(t), and the required reference are filed.

☐ **Benefit Claims to More Than 400 Prior-Filed Applications**

The Office's automated system to record and capture benefit claims is only capable of recording benefit claims for 400 prior-filed applications. Therefore, the Office is unable to generate a filing receipt containing benefit claims for more than 400 prior-filed applications even though applicant is entitled to submit benefit claims for more than 400 prior-filed applications. Accordingly, applicant should not request a corrected filing receipt to include benefit claims for more than 400 prior-filed applications.

☒ **Prior-Filed Nonprovisional Application has been Improperly Indicated as a National Stage (35 U.S.C. 371) Application**

Applicant submitted a benefit claim to a prior-filed nonprovisional application and improperly indicated that the prior-filed application is a national stage application under 35 U.S.C. 371. The Office's records show that the prior-filed application is an application filed under 35 U.S.C. 111(a). The Office has entered the benefit claim to the prior-filed application as a benefit claim to an application filed under 35 U.S.C. 111(a). Any request for a corrected filing receipt to include the indication that the prior-filed application is a national stage application will not be granted unless applicant supplies evidence that the prior application was in fact a national stage application. Accordingly, applicant should not submit such request without such evidence. Applicant should submit an amendment (or an application data sheet (ADS) if the benefit claim was submitted in an ADS) to delete the indication that the prior-filed application is a national stage application.

For more information and examples on benefit claims, please see Claiming the Benefit of a Prior-Filed Application under 35 U.S.C. 119(e), 120, 121, and 365(c), 1268 Off. Gaz. Pat. Office 89 (March 18, 2003), which is available on the USPTO website at http://www.uspto.gov/web/offices/com/sol/og/2003/week11/patbene.htm, and the Manual of Patent Examining Procedure (MPEP) §§ 201.11 and 201.14.

PART 2 - COPY TO BE RETURNED WITH RESPONSE

UNITED STATES PATENT AND TRADEMARK OFFICE

UNITED STATES DEPARTMENT OF COMMERCE
United States Patent and Trademark Office
Address: COMMISSIONER FOR PATENTS
P.O. Box 1450
Alexandria, Virginia 22313-1450
www.uspto.gov

APPL NO.	FILING OR 371 (c) DATE	ART UNIT	FIL FEE REC'D	ATTY.DOCKET NO	DRAWINGS	TOT CLMS	IND CLMS
10/708,471	03/05/2004	3712	611	800769	5	28	3

CONFIRMATION NO. 2470

23372
TAYLOR RUSSELL & RUSSELL, P.C.
4807 SPICEWOOD SPRINGS ROAD
BUILDING TWO SUITE 250
AUSTIN, TX 78759

TAYLOR RUSSELL
JUN 07 2004
& RUSSELL, P.C.

FILING RECEIPT

"OC000000012869923"

Date Mailed: 06/04/2004

Receipt is acknowledged of this regular Patent Application. It will be considered in its order and you will be notified as to the results of the examination. Be sure to provide the U.S. APPLICATION NUMBER, FILING DATE, NAME OF APPLICANT, and TITLE OF INVENTION when inquiring about this application. Fees transmitted by check or draft are subject to collection. Please verify the accuracy of the data presented on this receipt. **If an error is noted on this Filing Receipt, please write to the Office of Initial Patent Examination's Filing Receipt Corrections, facsimile number 703-746-9195. Please provide a copy of this Filing Receipt with the changes noted thereon. If you received a "Notice to File Missing Parts" for this application, please submit any corrections to this Filing Receipt with your reply to the Notice. When the USPTO processes the reply to the Notice, the USPTO will generate another Filing Receipt incorporating the requested corrections (if appropriate).**

Applicant(s)

Timothy David Robert Henderson, North Wales, UNITED KINGDOM;

Domestic Priority data as claimed by applicant

Foreign Applications

UNITED KINGDOM 0121655.5 09/07/2001

If Required, Foreign Filing License Granted: 05/28/2004

Projected Publication Date: 09/09/2004

Non-Publication Request: No

Early Publication Request: No

** SMALL ENTITY **

Title

Resilient Elastomeric Structure

Preliminary Class

472

LICENSE FOR FOREIGN FILING UNDER
Title 35, United States Code, Section 184
Title 37, Code of Federal Regulations, 5.11 & 5.15

GRANTED

The applicant has been granted a license under 35 U.S.C. 184, if the phrase "IF REQUIRED, FOREIGN FILING LICENSE GRANTED" followed by a date appears on this form. Such licenses are issued in all applications where the conditions for issuance of a license have been met, regardless of whether or not a license may be required as set forth in 37 CFR 5.15. The scope and limitations of this license are set forth in 37 CFR 5.15(a) unless an earlier license has been issued under 37 CFR 5.15(b). The license is subject to revocation upon written notification. The date indicated is the effective date of the license, unless an earlier license of similar scope has been granted under 37 CFR 5.13 or 5.14.

This license is to be retained by the licensee and may be used at any time on or after the effective date thereof unless it is revoked. This license is automatically transferred to any related applications(s) filed under 37 CFR 1.53(d). This license is not retroactive.

The grant of a license does not in any way lessen the responsibility of a licensee for the security of the subject matter as imposed by any Government contract or the provisions of existing laws relating to espionage and the national security or the export of technical data. Licensees should apprise themselves of current regulations especially with respect to certain countries, of other agencies, particularly the Office of Defense Trade Controls, Department of State (with respect to Arms, Munitions and Implements of War (22 CFR 121-128)); the Office of Export Administration, Department of Commerce (15 CFR 370.10 (j)); the Office of Foreign Assets Control, Department of Treasury (31 CFR Parts 500+) and the Department of Energy.

NOT GRANTED

No license under 35 U.S.C. 184 has been granted at this time, if the phrase "IF REQUIRED, FOREIGN FILING LICENSE GRANTED" DOES NOT appear on this form. Applicant may still petition for a license under 37 CFR 5.12, if a license is desired before the expiration of 6 months from the filing date of the application. If 6 months has lapsed from the filing date of this application and the licensee has not received any indication of a secrecy order under 35 U.S.C. 181, the licensee may foreign file the application pursuant to 37 CFR 5.15(b).

Table of Contents of 10708471 date: 09-07-2004

Table of Contents (As Displayed)

Date	Code	Descr.	Pages	Public	A-Pub	Annotation	Status
03-05-2004	TRNA	Transmittal of New Application	2	Yes			Default
03-05-2004	OATH	Oath or Declaration filed	1	Yes			Default
03-05-2004	ADS	Application Data Sheet	2	Yes			Default
03-05-2004	WFEE	Fee Worksheet (PTO-875)	1	Yes			Default
03-05-2004	CLM	Claim	5	Yes			Default
03-05-2004	SPEC	Specification	18	Yes			Default
03-05-2004	ABST	Abstract	1	Yes			Default
03-05-2004	DRW	Drawings	5	Yes			Default
03-05-2004	N417	Status Letter Mailed to Applicant	2	Yes			Default
05-28-2004	WFEE	Fee Worksheet (PTO-875)	1	Yes			Default
06-04-2004	CTMS	Miscellaneous Action with SSP	3	Yes			Default

Electronic Version
Stylesheet Version v1.1.1

Description

Resilient Elastomeric Structure

Cross Reference to Related Applications

[0001] This application is the national stage commencement under 35 U.S.C. 371 of international application number PCT/GB02/04050 filed 6 September 2002, claiming priority to application number GB 0121655.5 filed 7 September 2001.

Background of Invention

[0002] This invention relates to a resilient elastomeric structure. In particular, but not exclusively, it relates to a resilient elastomeric structure for use as a component of a playground toy or an amusement ride.

[0003] In children's playgrounds, it is common to find rides that take the form of a ride body upon which a child can sit, the ride body being connected through a helical spring to a plate secured on the ground. This means that a child can sit upon the body and bounce or rock, causing the spring to flex. The resilient nature of the spring is such

that it tends always to urge the ride body back to a neutral, upright position. To add interest to the ride, the ride body is typically shaped to resemble an animal, a motorcycle, or some other shape intended to please a child.

[0004] These rides are popular with children, and are very safe, there being no instances known to the applicant of a child being harmed when playing on them, other than in the type of minor falls that will happen inevitably. However, the presence of a strong steel spring can give the ride an "engineered" appearance and the impression, even if incorrect, that the spring could injure a child, perhaps by trapping a hand or foot.

[0005] It has been proposed in US-A-5 415 590 to replace the spring in such a ride with a dome-shaped construction of natural and neoprene rubber, into which is moulded a steel support post, the body of the ride being carried on the support post. While such a ride may perform well when it is first manufactured, experience has shown that rubber will, over time, become brittle when exposed to the weather. When this happens, it looses its elastomeric properties, and may eventually become brittle. It is also possible that the supporting post will become loose or may even detach, this being highly undesirable and risky

for a child using the ride.

SUMMARY OF INVENTION

[0006] An aim of this invention is to provide a replacement for the spring in a playground ride or other amusement apparatus that does not suffer from the disadvantages of the arrangement shown in US-A-5 415 590.

[0007] From a first aspect, this invention provides a resilient elastomeric support structure for use in a ride comprising an elastomeric body that includes a first connection formation for connection with a supporting foundation, a second connection formation for connection with a ride body, and a connection region interconnecting the first and second connection formations, the elastomeric structure being formed of polyurethane.

[0008] It has been found that polyurethane exhibits particularly advantageous elastomeric properties while having greater durability and predictability of properties than can be obtained from rubber. These can be further enhanced by addition of an ultraviolet stabilising formulation. The resilient properties of polyurethane are exploited for some applications, such as bushes for use in vehicle suspension systems, where the main mode of deflection of the material is torsional. However, it has not recognised as being

18 FEB 2005

UNITED STATES PATENT AND TRADEMARK OFFICE

COMMISSIONER FOR PATENTS
UNITED STATES PATENT AND TRADEMARK OFFICE
P.O. BOX 1450
ALEXANDRIA, VA 22313-1450
www.uspto.gov

23372
TAYLOR, RUSSELL & RUSSELL, P.C.
4807 Spicewood Springs Road
Building Two, Suite 250
Austin, TX 78759

In re Application of :
HENDERSON, Timothy David Robert :
U.S. Application No.: 10/708,471 :
Filing Date: 05 March 2004 :
Attorney Docket No.: 800769 :
For: RESILIENT ELASTOMERIC :
STRUCTURE :

DECISION ON RENEWED PETITION TO CONVERT

This decision is in response to applicant's "Request for Reconsideration on Petition to Convert" filed via facsimile on 05 November 2004.

BACKGROUND

On 05 March 2004, applicant filed the above-captioned application using the Electronic Filing System (EFS). Applicant intended that the above-captioned application be processed as a national stage filing under 35 U.S.C. 371. However, the application was processed as a filing under 35 U.S.C. 111(a) because a filing under 35 U.S.C. 371 is not allowed using the EFS.

On 09 June 2004, applicant filed a petition to convert the above-captioned application to a national stage of PCT/GB02/04050.

On 14 September 2004, a decision dismissing applicant's petition to convert was mailed. Applicant failed to show a loss of any patent rights required for a grantable petition to convert.

On 05 November 2004, applicant filed the instant request for reconsideration of the decision on the petition to convert which was accompanied by, *inter alia*, a copy of an EFS Continuity screen and a copy of the filing receipt for the above-captioned application.

DISCUSSION

The decision mailed 14 September 2004 noted that the above-captioned application was properly processed pursuant to 35 U.S.C. 111(a) as use of the EFS is not allowed for filing a national stage application. Accordingly, applicant's request to convert the above-identified application to a national stage filing under 35 U.S.C. 371

was dismissed because applicant had not made a showing that a loss of patent rights would occur if the above-captioned application is a filing under 35 U.S.C. § 111(a).

In the request for reconsideration, applicant argues:

(1) The continuity data screen shown for an EFS application in Exhibit A would allow a national stage application to be filed electronically;

(2) Petitioner contacted the USPTO Electronic Business Center who confirmed that a national stage application filed in the EFS would be processed as a national stage application;

(3) The EFS Frequently Asked Questions cited in the prior decision was not apparent to the petitioner at the time of filing and even if it was, the confirmation of the ability to file electronically, the action taken by petitioner would have been the same;

(4) A loss of patent rights would occur because the petitioner has not received the benefit of claiming the priority date to the parent foreign application.

These claims will be addressed in turn:

Continuity Data Screen

Petitioner claims that the continuity data screen allows a national stage application to be filed electronically. However, that is not the case. The continuity data screen on an EFS application allows an applicant to file a continuation, divisional, or continuation in part application of a PCT application only. *See* MPEP § 1895.

The filing of a national stage application using the EFS is not possible.

Purported Telephone Call to Electronic Business Center

The petitioner also claims that in a "telephone call to the USPTO Electronic Business Center" it resulted in a confirmation that "a PCT National Stage application filed electronically in the EFS would be received and treated as a Pct National Stage application under 35 U.S.C. ¶ 371."

A check with the USPTO Electronic Business Center Help Center did not result in confirmation of applicant's claim as the representative reiterated that filing of a national stage application using the EFS is not possible.

Regardless, in accordance with 37 CFR 1.2, "[a]ll business with the Patent and Trademark Office should be transacted in writing." Further, "[t]he action of the Patent

and Trademark Office will be based exclusively on the written record in the Office. No attention will be paid to any alleged oral promise, stipulation, or understanding in relation to which there is disagreement or doubt." Therefore, any telephone discussion between applicant and an unnamed member of the Electronic Business Center of the USPTO will not be considered in this decision. *See also Farnum v. Manbeck, Jr.*, 21 USPQ.2d 1691 (D.D.C. 1991) (holding that applicant's arguments asserting oral misrepresentations by USPTO personnel or irrelevant in light of 37 CFR 1.2.).

Information on FAQ Not Apparent

The petitioner also argues that the "EFS Frequently Asked Questions cited in the Decision on Petition to Convert was not apparent to the petitioner at the time of filing on March 5, 2004."

This argument is dismissed as each practitioner registered with the Office is responsible for maintaining familiarity with Office practice. Moreover, the link to the FAQ's is clearly listed on the EFS webpage. The petitioner should have checked this before filing the above-captioned application.

Loss of Patent Rights

In the request for reconsideration, applicant's claim a loss of patent rights and contend:

> Petitioner has not received the benefit of claiming priority date to the patent priority application number 0121655.5 filed in the United Kingdom on September 7, 2001, and the subsequently filed PCT application. . . . Without a claim of continuation to the intervening PCT application, the time period between the filing of the parent application in the United Kingdom and the child application in the United States is greater than 12 months, which would result in a loss of patent rights in the United States.

Applicant's petition to convert would be granted if no other remedy is available. However, another remedy is available.

Applicant may claim priority to the aforementioned British patent pursuant to 35 U.S.C. 119. Applicant is also entitled to claim the benefit under 35 U.S.C. 120 and 365(c) of the filing date of the international application PCT/GB02/04050 for the common subject matter, since this application and the international application designating the United States were copending on 05 March 2004. A petition under 37 CFR 1.78 and an appropriate petition fee would be required.

Since another remedy is available, no loss of patent rights would occur.

DECISION

For the reasons discussed above, applicant's renewed petition to convert is **DISMISSED** without prejudice.

Any renewed petition to convert must be filed within **TWO (2) MONTHS** from the mail date of this decision. Extensions of time may be obtained under 37 CFR 1.136(a).

Any further correspondence with respect to this matter deposited with the United States Postal Service should be addressed to the Mail Stop PCT, Commissioner for Patents, Office of PCT Legal Administration, P.O. Box 1450, Alexandria, Virginia 22313-1450, with the contents of the letter marked to the attention of the Office of PCT Legal Administration.

This application is being forwarded to Technology Center 3700 for further processing under 35 U.S.C. 111(a).

James Thomson
Attorney Advisor
PCT Legal Office

Tel.: (571) 272-3302

UNITED STATES PATENT AND TRADEMARK OFFICE

COMMISSIONER FOR PATENTS
UNITED STATES PATENT AND TRADEMARK OFFICE
P.O. BOX 1450
ALEXANDRIA, VA 22313-1450
www.uspto.gov

JOHN C. SMITH, ESQ.
2499 GLADES ROAD - SUITE 113
BOCA RATON, FL 33431

COPY MAILED

SEP 13 2007

OFFICE OF PETITIONS

In re Application of :
Stuart Seidel :
Application No. 10/708,484 : ON PETITION
Filed: March 5, 2004 :
Attorney Docket No. P03050102 :

This is a decision on the petition under 37 CFR 1.137(b), filed on January 24, 2007 and supplemented on March 22, 2007, to revive the above-identified application.

The application became abandoned for failure to timely respond to the non-final Office action mailed October 4, 2005. A Notice of Abandonment was mailed on April 14, 2006.

There is no indication that the person signing the present petition was ever given a power of attorney or authorization of agent to prosecute the above-identified application. In accordance with 37 CFR 1.34(a), the signature appearing on the petition shall constitute a representation to the United States Patent and Trademark Office that he/she is authorized to represent the particular party in whose behalf he/she acts.

The petition satisfies the requirements of 37 CFR 1.137(b), in that, petitioner has supplied (1) the reply in the form of an amendment; (2) the petition fee of $750; and (3) a proper statement of unintentional delay. Therefore, the petition is **GRANTED**.

This application file is being referred to Technology Center Art Unit 3676, for review of the amendment filed on January 24, 2007.

Telephone inquiries concerning this decision should be directed to the undersigned at (571) 272-3226.

Andrea Smith
Petitions Examiner
Office of Petitions

UNITED STATES PATENT AND TRADEMARK OFFICE

Commissioner for Patents
United States Patent and Trademark Office
P.O. Box 1450
Alexandria, VA 22313-1450
www.uspto.gov

BUCHANAN INGERSOLL & ROONEY PC
P.O. BOX 1404
ALEXANDRIA, VA 22313-1404

COPY MAILED

JUL 18 2008

In re Application of :
RAGHUNANDHAN, Padmanabhan :
Application No. 10/708,494 : DECISION ON PETITION
Filed: March 08, 2004 : TO WITHDRAW
Attorney Docket No. : FROM RECORD
:

This is a decision on the Request to Withdraw as attorney or agent of record under 37 C.F.R. § 1.36(b), filed June 20, 2008.

The request is **NOT APPROVED.**

A grantable request to withdraw as attorney/agent of record must be signed by every attorney/agent seeking to withdraw or contain a clear indication that one attorney is signing on behalf of another/others. A request to withdraw will not be approved unless at least 30 (thirty) days would remain between the date of approval and the later of the expiration date of a time to file a response or the expiration date of the maximum time period which can be extended under 37 C.F.R. § 1.136(a).

The request to withdraw less than all attorneys appointed by customer number 23464 cannot be approved. The addition and/or deletion of a practitioner from the list of practitioners associated with a Customer Number should be made by submitting a "Request for Customer Number Data Change" (PTO/SB/124) which will result in the addition or deletion of such practitioner from the list of persons authorized to represent any applicant or assignee of the entire interest who appointed all of the practitioners associated with such Customer Number. See MPEP 403 Section I. Customer Number Practice.

All future communications from the Office will continue to be directed to the above-listed address until otherwise notified by applicant.

Telephone inquiries concerning this decision should be directed to Tredelle Jackson at 571-272- 2783.

Tredelle D. Jackson
Paralegal Specialist
Office of Petitions

UNITED STATES PATENT AND TRADEMARK OFFICE

Commissioner for Patents
United States Patent and Trademark Office
P.O. Box 1450
Alexandria, VA 22313-1450
www.uspto.gov

P. RAGHUNANDHAN
NO 7
25TH CROSS STREET
BESANT NAGAR, CHENNAI 60009-0 IN INDIA

MAILED

FEB 0 2 2009

OFFICE OF PETITIONS

In re Application of :
RAGHUNANDHAN, Padmanabhan :
Application No. 10/708,494 : DECISION ON PETITION
Filed: March 08, 2004 : TO WITHDRAW
Attorney Docket No. : FROM RECORD
:

This is a decision on the Request to Withdraw as attorney or agent of record under 37 C.F.R. § 1.36(b), filed January 05, 2009.

The request is **NOT APPROVED**.

The Office has revised its change in procedure for request to withdraw from representation applies to requests filed on or after May 12, 2008.

A grantable request to withdraw as attorney/agent of record must be signed by every attorney/agent seeking to withdraw or contain a clear indication that one attorney is signing on behalf of another/others. The Office requires the practitioner(s) requesting withdrawal to certify that he, she, or they have: (1) given reasonable notice to the client, prior to the expiration of the response period, that the practitioner(s) intends to withdraw from employment; (2) delivered to the client or a duly authorized representative of the client all papers and property (including funds) to which the client is entitled; and (3) notified the client of any responses that may be due and the time frame within which the client must respond, pursuant 37 CFR 10.40(c).

The request cannot be approved because we have no record of customer 23464 in our system. The inventors address is listed as the correspondence address in our system.

The request to withdraw less than all attorneys appointed by customer number 23464 cannot be approved. The addition and/or deletion of a practitioner from the list of practitioners associated with a Customer Number should be made by submitting a "Request for Customer Number Data Change" (PTO/SB/124) which will result in the addition or deletion of such practitioner from the list of persons authorized to represent any applicant or assignee of the entire interest who

appointed all of the practitioners associated with such Customer Number. See MPEP 403 Section I. Customer Number Practice.

All future communications from the Office will continue to be directed to the above-listed address until otherwise notified by applicant.

Telephone inquiries concerning this decision should be directed to Tredelle Jackson at 571-272-2783.

Tredelle D. Jackson
Paralegal Specialist
Office of Petitions

cc: **BUCHANAN INGERSOLL & ROONEY PC**
P.O. BOX 1404
ALEXANDRIA, VA 22313-1404

UNITED STATES PATENT AND TRADEMARK OFFICE

COMMISSIONER FOR PATENTS
UNITED STATES PATENT AND TRADEMARK OFFICE
P.O. BOX 1450
ALEXANDRIA, VA 22313-1450
www.uspto.gov

MALIN HALEY AND DIMAGGIO, PA
1936 S ANDREWS AVENUE
FORT LAUDERDALE, FL 33316

COPY MAILED

MAR 16 2007

OFFICE OF PETITIONS

In re Application of :
Roger M. Bernsen :
Application No. 10/708,527 : ON PETITION
Filed: March 10, 2004 :
Attorney Docket No. 5265.3813 :

This is a decision on the petition under 37 CFR 1.137(b), filed December 11, 2006, to revive the above-identified application.

The petition is **GRANTED**.

The application became abandoned for failure to timely file a reply within the meaning of 37 CFR 1.113 to the final Office action of May 5, 2006. The proposed reply required for consideration of a petition to revive must be a Notice of Appeal (and appeal fee required by 37 CFR 41.20(b)(2), an amendment that *prima facie* places the application in condition for allowance, a Request for Continued Examination and submission (37 CFR 1.114), or the filing of a continuing application under 37 CFR 1.53(b). See MPEP 711.03(c)(III)(A)(2). A three-month extension of time pursuant to the provisions of 37 CFR 1.136(a) was obtained. Accordingly, the date of abandonment of this application is November 6, 2006.

The petition satisfies the requirements of 37 CFR 1.137(b) in that petitioner has supplied (1) the reply in the form of a Request for Continued Examination (RCE), including the fee of $395 and the submission required by 37 CFR 1.114; (2) the petition fee of $750; and (3) a proper statement of unintentional delay.

The application is being referred to Technology Center AU 3677 for processing of the RCE and for appropriate action by the Examiner in the normal course of business on the amendment submitted in accordance with 37 CFR 1.114.

Telephone inquiries concerning this decision should be directed to the undersigned at (571) 272-3204. Inquiries relating to further prosecution should be directed to the Technology Center.

Sherry D. Brinkley
Petitions Examiner
Office of Petitions

UNITED STATES PATENT AND TRADEMARK OFFICE

Commissioner for Patents
United States Patent and Trademark Office
P.O. Box 1450
Alexandria, VA 22313-1450
www.uspto.gov

COPY MAILED

SEP 28 2007

OFFICE OF PETITIONS

Malin, Haley and Dimaggio, PA
1936 S. Andrews Avenue
Fort Lauderdale, FL 33316

In re Application of :
Roger M. Bernsen :
Application No. 10/708,527 : DECISION ON PETITION
Filed: March 10, 2004 : TO WITHDRAW
Attorney Docket No. 5265.3813 : FROM RECORD
:

This is a decision on the Request to Withdraw as attorney or agent of record under 37 C.F.R. § 1.36(b), filed July 19, 2007.

The request is **NOT APPROVED**.

A grantable request to withdraw as attorney/agent of record must be signed by every attorney/agent seeking to withdraw or contain a clear indication that one attorney is signing on behalf of another/others. A request to withdraw will not be approved unless at least 30 (thirty) days would remain between the date of approval and the later of the expiration date of a time to file a response or the expiration date of the maximum time period which can be extended under 37 C.F.R. § 1.136(a).

The request cannot be approved because the request to withdraw was not signed.

All future communications from the Office will continue to be directed to the above-listed address until otherwise notified by applicant. A courtesy copy will be mailed to the applicant.

A Notice of Allowance and Fees Due was mailed on September 11, 2007. Failure to pay the fees by the due date of December 11, 2007, will result in the abandonment of the application. This statutory period cannot be extended.

Telephone inquiries concerning this decision should be directed to Kimberly Inabinet at 571-272- 4618.

Kimberly Inabinet
Petitions Examiner
Office of Petitions

cc: Roger M. Bernsen
3030 S.W. 144th Street
Davie, FL 33330

UNITED STATES PATENT AND TRADEMARK OFFICE

Commissioner for Patents
United States Patent and Trademark Office
P.O. Box 1450
Alexandria, VA 22313-1450
www.uspto.gov

COPY MAILED

SEP 04 2008

OFFICE OF PETITIONS

BRINKS HOFER GILSON & LIONE
P.O. BOX 10395
CHICAGO, IL 60610

In re Application of Zhou et al. :
Application No. 10/708,536 : Decision Dismissing Petition
Filing Date: March 10, 2004 : Under 37 CFR 1.78(a)(6)
Attorney Docket No. 10095/35 :

This is a decision on the petition under 37 CFR 1.78(a)(6), filed July 16, 2008, to accept an unintentionally delayed claim under 35 U.S.C. § 119(e) for the benefit of priority to a prior-filed provisional application. This also a decision on the petition under 37 CFR 1.182 requesting expedited consideration of the petition under 37 CFR 1.78.

The petition under 37 CFR 1.78(a)(6) is **dismissed**.

The petition under 37 CFR 1.182 is **granted**. The Office has expedited consideration of the petition under 37 CFR 1.78.

A petition under 37 CFR 1.78(a)(6) is only applicable to those applications filed on or after November 29, 2000. Further, the petition is appropriate only after expiration of the period specified in 37 CFR 1.78(a)(5)(ii) and must be filed during the pendency of the nonprovisional application. In addition, the petition must be accompanied by:

(1) the reference required by 35 U.S.C. § 119(e) and 37 CFR 1.78(a)(5)(i) to the prior-filed application, unless previously submitted;
(2) the surcharge set forth in § 1.17(t); and
(3) a statement that the entire delay between the date the claim was due under 37 CFR 1.78(a)(5)(ii) and the date the claim was filed was unintentional. The Director may require additional information where there is a question whether the delay was unintentional.

The petition does not satisfy item (1) above. The amendment is not acceptable as drafted since it improperly incorporates by reference prior-filed provisional application no. 60/454,806.

The amendment adds the following statement to the beginning of the specification:

> The present document claims the benefit of the filing date ... of U.S. Provisional Patent Application Serial No. 60/454,806, ... which is hereby incorporated by reference in its entirety.

An incorporation by reference statement added after an application's filing date is not effective because no new matter can be added to an application after its filing date (*see* 35 U.S.C. § 132(a)). If an incorporation by reference statement is included in an amendment to the specification to add a benefit claim under 35 U.S.C. § 120 after the filing date of the application, the amendment is not proper. When a benefit claim under 35 U.S.C. § 120 is submitted after the filing of an application, the reference to the prior application cannot include an incorporation by reference statement of the prior application. *See Dart Industries v. Banner*, 636 F.2d 684, 207 USPQ 273 (C.A.D.C. 1980). *Note* MPEP §§ 201.06(c) and 608.04(b).

Before the petition under 37 CFR § 1.78(a)(3) can be granted, a renewed petition and either an Application Data Sheet or a substitute amendment (complying with the provisions of 37 CFR 1.121 and 37 CFR 1.76(b)(5)) to correct the above matters are required.

Further correspondence with respect to this matter should be addressed as follows:

By mail: Mail Stop PETITIONS
Commissioner for Patents
Post Office Box 1450
Alexandria, VA 22313-1450

By fax: (571) 273-8300
ATTN: Office of Petitions

By hand: Customer Service Window
Mail Stop Petitions
Randolph Building
401 Dulany Street
Alexandria, VA 22314

Any questions concerning this matter may be directed to Steven Brantley at (571) 272-3203.

Charles Steven Brantley
Senior Petitions Attorney
Office of Petitions

UNITED STATES PATENT AND TRADEMARK OFFICE

Commissioner for Patents
United States Patent and Trademark Office
P.O. Box 1450
Alexandria, VA 22313-1450
www.uspto.gov

BRINKS HOFER GILSON & LIONE
P.O. BOX 10395
CHICAGO, IL 60610

COPY MAILED

SEP 12 2008

OFFICE OF PETITIONS

In re Application of Zhou et al. :
Application No. 10/708,536 : Decision Granting Petition
Filing Date: March 10, 2004 : Under 37 CFR 1.78(a)(6)
Attorney Docket No. 10095/35 :

This is a decision on the petition under 37 CFR 1.78(a)(6), filed September 9, 2008, to accept an unintentionally delayed claim under 35 U.S.C. §119(e) for the benefit of the prior-filed provisional application set forth in the concurrently filed amendment.

The petition is **GRANTED.**

A petition under 37 CFR 1.78(a)(6) is only applicable to those applications filed on or after November 29, 2000. Further, the petition is appropriate only after expiration of the period specified in 37 CFR 1.78(a)(5)(ii) and must be filed during the pendency of the nonprovisional application. In addition, the petition must be accompanied by:

(1) the reference required by 35 U.S.C. § 119(e) and 37 CFR 1.78(a)(5)(i) to the prior-filed application, unless previously submitted;
(2) the surcharge set forth in § 1.17(t); and
(3) a statement that the entire delay between the date the claim was due under 37 CFR 1.78(a)(5)(ii) and the date the claim was filed was unintentional. The Director may require additional information where there is a question whether the delay was unintentional.

Additionally, the instant nonprovisional application must be pending at the time of filing of the reference to the prior-filed provisional application as required by 37 CFR 1.78(a)(5)(ii). Further, the nonprovisional application claiming the benefit of the prior-filed provisional application must have been filed within twelve months of the filing date of the prior-filed provisional application.

All of the above requirements having been satisfied, the late claim for priority under 35 U.S.C. § 119(e) is accepted as being unintentionally delayed.

The granting of the petition to accept the delayed benefit claim to the prior-filed application under 37 CFR 1.78(a)(6) should not be construed as meaning that this application is entitled to the benefit of the filing date of the prior-filed application. In order

for this application to be entitled to the benefit of the prior-filed application, all other requirements under 35 U.S.C. §119(e) and 37 CFR 1.78(a)(4) and (a)(5) must be met. Similarly, the fact that the corrected Filing Receipt accompanying this decision on petition includes the prior-filed application should not be construed as meaning that applicant is entitled to the claim for benefit of priority to the prior-filed application noted thereon. Accordingly, the examiner will, in due course, consider this benefit claim and determine whether the application is entitled to the benefit of the earlier filing date.

A corrected Filing Receipt, which includes the priority claim to the prior-filed provisional application, accompanies this decision on petition.

The application is being forwarded to Technology Center Art Unit 2883 for consideration by the examiner of the claim under 35 U.S.C. §119(e) for the benefit of priority to the prior-filed provisional application.

Any inquiries concerning this decision may be directed to Senior Petitions Attorney Steven Brantley at (571) 272-3203. All other inquiries concerning either the examination procedures or status of the application should be directed to the Technology Center.

Charles Steven Brantley
Senior Petitions Attorney
Office of Petitions

ATTACHMENT: Corrected Filing Receipt

UNITED STATES PATENT AND TRADEMARK OFFICE

UNITED STATES DEPARTMENT OF COMMERCE
United States Patent and Trademark Office
Address: COMMISSIONER FOR PATENTS
P.O. Box 1450
Alexandria, Virginia 22313-1450
www.uspto.gov

APPLICATION NUMBER	FILING or 371(c) DATE	GRP ART UNIT	FIL FEE REC'D	ATTY.DOCKET.NO	TOT CLAIMS	IND CLAIMS
10/708,536	03/10/2004	2883	716	10095-35	52	4

CONFIRMATION NO. 2535

CORRECTED FILING RECEIPT

757
BRINKS HOFER GILSON & LIONE
P.O. BOX 10395
CHICAGO, IL 60610

Date Mailed: 09/11/2008

Receipt is acknowledged of this non-provisional patent application. The application will be taken up for examination in due course. Applicant will be notified as to the results of the examination. Any correspondence concerning the application must include the following identification information: the U.S. APPLICATION NUMBER, FILING DATE, NAME OF APPLICANT, and TITLE OF INVENTION. Fees transmitted by check or draft are subject to collection. Please verify the accuracy of the data presented on this receipt. **If an error is noted on this Filing Receipt, please submit a written request for a Filing Receipt Correction. Please provide a copy of this Filing Receipt with the changes noted thereon. If you received a "Notice to File Missing Parts" for this application, please submit any corrections to this Filing Receipt with your reply to the Notice. When the USPTO processes the reply to the Notice, the USPTO will generate another Filing Receipt incorporating the requested corrections**

Applicant(s)

Yan Zhou, Pleasanton, CA;
Seng-Tiong Ho, Wheeling, IL;

Power of Attorney: The patent practitioners associated with Customer Number 00757

Domestic Priority data as claimed by applicant

This appln claims benefit of 60/454,806 03/14/2003

Foreign Applications

If Required, Foreign Filing License Granted: 05/19/2004

The country code and number of your priority application, to be used for filing abroad under the Paris Convention, is **US 10/708,536**

Projected Publication Date: Request for Non-Publication Acknowledged

Non-Publication Request: Yes

Early Publication Request: No
**** SMALL ENTITY ****

Title

Superlens and a method for making the same

Preliminary Class

385

PROTECTING YOUR INVENTION OUTSIDE THE UNITED STATES

Since the rights granted by a U.S. patent extend only throughout the territory of the United States and have no effect in a foreign country, an inventor who wishes patent protection in another country must apply for a patent in a specific country or in regional patent offices. Applicants may wish to consider the filing of an international application under the Patent Cooperation Treaty (PCT). An international (PCT) application generally has the same effect as a regular national patent application in each PCT-member country. The PCT process **simplifies** the filing of patent applications on the same invention in member countries, but **does not result** in a grant of "an international patent" and does not eliminate the need of applicants to file additional documents and fees in countries where patent protection is desired.

Almost every country has its own patent law, and a person desiring a patent in a particular country must make an application for patent in that country in accordance with its particular laws. Since the laws of many countries differ in various respects from the patent law of the United States, applicants are advised to seek guidance from specific foreign countries to ensure that patent rights are not lost prematurely.

Applicants also are advised that in the case of inventions made in the United States, the Director of the USPTO must issue a license before applicants can apply for a patent in a foreign country. The filing of a U.S. patent application serves as a request for a foreign filing license. The application's filing receipt contains further information and guidance as to the status of applicant's license for foreign filing.

Applicants may wish to consult the USPTO booklet, "General Information Concerning Patents" (specifically, the section entitled "Treaties and Foreign Patents") for more information on timeframes and deadlines for filing foreign patent applications. The guide is available either by contacting the USPTO Contact Center at 800-786-9199, or it can be viewed on the USPTO website at http://www.uspto.gov/web/offices/pac/doc/general/index.html.

For information on preventing theft of your intellectual property (patents, trademarks and copyrights), you may wish to consult the U.S. Government website, http://www.stopfakes.gov. Part of a Department of Commerce initiative, this website includes self-help "toolkits" giving innovators guidance on how to protect intellectual property in specific countries such as China, Korea and Mexico. For questions regarding patent enforcement issues, applicants may call the U.S. Government hotline at 1-866-999-HALT (1-866-999-4158).

LICENSE FOR FOREIGN FILING UNDER

Title 35, United States Code, Section 184

Title 37, Code of Federal Regulations, 5.11 & 5.15

GRANTED

The applicant has been granted a license under 35 U.S.C. 184, if the phrase "IF REQUIRED, FOREIGN FILING LICENSE GRANTED" followed by a date appears on this form. Such licenses are issued in all applications where the conditions for issuance of a license have been met, regardless of whether or not a license may be required as

set forth in 37 CFR 5.15. The scope and limitations of this license are set forth in 37 CFR 5.15(a) unless an earlier license has been issued under 37 CFR 5.15(b). The license is subject to revocation upon written notification. The date indicated is the effective date of the license, unless an earlier license of similar scope has been granted under 37 CFR 5.13 or 5.14.

This license is to be retained by the licensee and may be used at any time on or after the effective date thereof unless it is revoked. This license is automatically transferred to any related applications(s) filed under 37 CFR 1.53(d). This license is not retroactive.

The grant of a license does not in any way lessen the responsibility of a licensee for the security of the subject matter as imposed by any Government contract or the provisions of existing laws relating to espionage and the national security or the export of technical data. Licensees should apprise themselves of current regulations especially with respect to certain countries, of other agencies, particularly the Office of Defense Trade Controls, Department of State (with respect to Arms, Munitions and Implements of War (22 CFR 121-128)); the Bureau of Industry and Security, Department of Commerce (15 CFR parts 730-774); the Office of Foreign AssetsControl, Department of Treasury (31 CFR Parts 500+) and the Department of Energy.

NOT GRANTED

No license under 35 U.S.C. 184 has been granted at this time, if the phrase "IF REQUIRED, FOREIGN FILING LICENSE GRANTED" DOES NOT appear on this form. Applicant may still petition for a license under 37 CFR 5.12, if a license is desired before the expiration of 6 months from the filing date of the application. If 6 months has lapsed from the filing date of this application and the licensee has not received any indication of a secrecy order under 35 U.S.C. 181, the licensee may foreign file the application pursuant to 37 CFR 5.15(b).

UNITED STATES PATENT AND TRADEMARK OFFICE

UNITED STATES DEPARTMENT OF COMMERCE
United States Patent and Trademark Office
Address: COMMISSIONER FOR PATENTS
P.O. Box 1450
Alexandria, Virginia 22313-1450
www.uspto.gov

Snell & Wilmer L.L.P., (Barker)
One Arizona Center
400 East Van Buren Street
Pheonix, AZ 85004-2202

Mail Date: 04/23/2010

Applicant	: David S. Bonalle	: DECISION ON REQUEST FOR
Patent Number	: 7668750	: RECALCULATION of PATENT
Issue Date	: 02/23/2010	: TERM ADJUSTMENT IN VIEW
Appliction No	: 10/708,545	: OF WYETH AND NOTICE OF INTENT TO
Filed	: 03/10/2004	: ISSUE CERTIFICATE OF CORRECTION
		:

The Request for Recalculation is **GRANTED** to the extent indicated.

The patent term adjustment has been determined to be **1323** days. The USPTO will *sua sponte* issue a certificate of correction reflecting the amount of PTA days determined by the recalculation.

Prior to the issuance of the certificate of correction, the USPTO will afford patentee an opportunity to be heard and request reconsideration. Accordingly, patentee has **one month or thirty (30) days**, whichever is longer, to file a request for reconsideration of this patent term adjustment calculation. See 35 U.S.C. 154(b)(3)(B)(ii) and 37 CFR 1.322(a)(4). No extensions of time will be granted under 37 CFR 1.136.

Patentee should use document code PET.OP if electronically filing a request for reconsideration of this patent term adjustment calculation. The patentee must also include the information required by 37 CFR 1.705(b)(2) and the fee required by 37 CFR 1.18(e). If patentee does not file a timely request for reconsideration of this patent term adjustment calculation including the information required by 37 CFR 1.705(b)(2) and the fee required by 37 CFR 1.18(e), the USPTO will issue a certificate of correction reflecting the PTA determination noted above.

Patentee should be aware that in order to preserve the right to review in the United States District Court for the District of Columbia of the USPTO patent term adjustment determination, patentee must ensure that he or she also take the steps required under 35 U.S.C. 154(b)(4)(A) in a timely manner. Nothing in the request for recalculation should be construed as providing an alternative time frame for commencing a civil action under 35 U.S.C. 154(b)(4)(A).

Any questions concerning this decision should be directed to the Office of Patent Legal Administration at 571-272-7702.

UNITED STATES PATENT AND TRADEMARK OFFICE

UNITED STATES DEPARTMENT OF COMMERCE
United States Patent and Trademark Office
Address: COMMISSIONER FOR PATENTS
P.O. Box 1450
Alexandria, Virginia 22313-1450
www.uspto.gov

Snell & Wilmer L.L.P., (Barker)
One Arizona Center
400 East Van Buren Street
Pheonix, AZ 85004-2202

Mail Date: 05/17/2010

Applicant : David S. Bonalle
Patent Number : 7668750
Issue Date : 02/23/2010
Application No: 10/708,545
Filed : 03/10/2004

: NOTICE CONCERNING IMPROPER
: CALCULATION OF PATENT TERM
: ADJUSTMENT BASED UPON USPTO
: IMPROPERLY MEASURING REDUCTION
: PERIOD UNDER 37 CFR 1.704(c)(10).

The United States Patent and Trademark Office (USPTO) discovered that in processing the recent recalculation decisions mailed in response to patentee's filed Request for Recalculation of Patent Term Adjustment in view of Wyeth, the USPTO improperly measured the reduction period for reductions under 37 CFR 1.704(c)(10). Pursuant to 37 CFR 1.704(c)(10), patentee's reduction begins on the date of filing the amendment under 37 CFR 1.312 ("1.312 amendment") or other related paper and ends on the date that the Office mails a response to the filing of the 1.312 amendment or other paper. It has been discovered that during the recalculation, the calculation failed to the limit the reduction to the mail date of the response to the 1.312 amendment or other paper. Accordingly, patentee's reductions were greater than warranted.

This notice **VACATES** the previous GRANTED request for recalculation and provides patentee with a revised GRANTED recalculation.

The patent term adjustment has been determined to be **1357** days. The USPTO will *sua sponte* issue a certificate of correction reflecting the amount of patent term adjustment (PTA) days determined by the recalculation.

Prior to the issuance of the certificate of correction, the USPTO will afford patentee an opportunity to be heard and request reconsideration. Accordingly, patentee has **one month or thirty (30) days** from the mail date of this notice, whichever is longer, to file a request for reconsideration of this PTA calculation. See 35 U.S.C. § 154(b)(3)(B)(ii) and 37 CFR 1.322(a)(4).

Patentee should use document code PET.OP if electronically filing a request for reconsideration of this PTA calculation. The patentee must also include the information required by 37 CFR 1.705(b)(2), and the fee required by 37 CFR 1.18(e). If patentee does not file a timely request for reconsideration of this PTA calculation, including the information required by 37 CFR 1.705(b)(2) and the fee required by 37 CFR 1.18(e), the USPTO will issue a certificate of correction reflecting the PTA determination noted above.

Patentee should be aware that in order to preserve the right of review of the USPTO's PTA determination in the United States District Court for the District of Columbia, patentee must ensure that the steps required under 35 U.S.C. § 154 (b)(4) are taken in a timely manner. Nothing in the request for recalculation should be construed as providing an alternative time frame for commencing a civil action under 35 U.S.C. § 154(b)(4).

UNITED STATES PATENT AND TRADEMARK OFFICE

Commissioner for Patents
United States Patent and Trademark Office
P.O. Box 1450
Alexandria, VA 22313-1450
www.uspto.gov

PATTERSON, THUENTE, SKAAR & CHRISTENSEN, P.A.
4800 IDS CENTER
80 SOUTH 8TH STREET
MINNEAPOLIS MN 55402-2100

COPY MAILED

FEB 23 2007

OFFICE OF PETITIONS

In re Application of	:	
Pun Choon **ONG**	:	
Application No. 10/708,559	:	DECISION ON PETITION
Filed: March 11, 2004	:	TO WITHDRAW
Attorney Docket No.	:	FROM RECORD

This is a decision on the Request to Withdraw as attorney or agent of record under 37 C.F.R. § 1.36(b), filed September 15, 2006.

The request is **APPROVED**.

A grantable request to withdraw as attorney/agent of record must be signed by every attorney/agent seeking to withdraw or contain a clear indication that one attorney is signing on behalf of another/others. A request to withdraw will not be approved unless at least 30 (thirty) days would remain between the date of approval and the later of the expiration date of a time to file a response or the expiration date of the maximum time period which can be extended under 37 C.F.R. § 1.136(a).

The request was signed by William L. Alexander on behalf of all attorneys of record. All attorneys/agents associated have been withdrawn. Applicant is reminded that there is no attorney of record at this time.

The request to change the correspondence of record is not acceptable as the requested correspondence address is not that of: (1) the first named signing inventor; or (2) an intervening assignee of the entire interest under 37 C.F.R 3.71. All future communications from the Office will be directed to the first named signing inventor at the first copied address below until otherwise properly notified by the applicant.

Telephone inquiries concerning this decision should be directed to the undersigned at (571) 272-7253.

Monica A. Graves
Petitions Examiner
Office of Petitions

cc: **PUN CHOON ONG**
8 PINE GROVE
SINGAPORE SG 738270

cc: **PINTAS IP GROUP SDN BHD**
WISMA MIRAMA, JALAN WISMAS PUTRA
KUALA LUMPUR, MALAYSIA 50460

UNITED STATES PATENT AND TRADEMARK OFFICE

Commissioner for Patents
United States Patent and Trademark Office
P.O. Box 1450
Alexandria, VA 22313-1450
www.uspto.gov

GRAY, PLANT, MOOTY, MOOTY & BENNETT, P.A.
P.O. BOX 2906
MINNEAPOLIS MN 55402-0906

COPY MAILED

NOV 0 6 2007

OFFICE OF PETITIONS

In re Application of :
Pun Choon Ong :
Application No. 10/708,559 : DECISION ON PETITION
Filed: March 11, 2004 :
Attorney Docket No. 112075 :

This is a decision on the petition under 37 CFR 1.137(b), filed April 4, 2007, to revive the above-identified application.

The petition is **GRANTED.**

The application became abandoned for failure to timely reply within the meaning of 37 CFR 1.113 to the final Office action, mailed September 28, 2006, which set a shortened statutory period for reply of three (3) months. No extensions of time were obtained under the provisions of 37 CFR 1.136(a). Accordingly, the application became abandoned on December 29, 2006. A Notice of Abandonment was mailed on March 20, 2007.

The petition satisfies the requirements of 37 CFR 1.137(b) in that petitioner has supplied (1) the required reply in the form of a request for continued examination, $395 filing fee, and submission as required by 37 CFR 1.114 (copy of amendment filed on December 19, 2006), (2) the petition fee of $750, and (3) a proper statement of unintentional delay. Accordingly, the failure to timely reply to the final Office action of September 27, 2006 is accepted as being unintentionally delayed.

An extension of time under 37 CFR 1.136 must be filed prior to the expiration of the maximum extendable period for reply. *See* In re Application of S, 8 USPQ2d 1630, 1631 (Comm'r Pats. 1988). Since the $510 extension of time fee submitted with the petition on April 4, 2007 was subsequent to the maximum extendable period for reply, this fee is unnecessary and will be credited to petitioner's deposit account in due course.

This application is being referred to Technology Center AU 3725 for processing the request for continued examination and for

appropriate action in the normal course of business on the submission under 37 CFR 1.114.

Telephone inquiries concerning this decision should be directed to the undersigned at (571) 272-3218.

Frances Hicks
Petitions Examiner
Office of Petitions

UNITED STATES PATENT AND TRADEMARK OFFICE

Commissioner for Patents
United States Patent and Trademark Office
P.O. Box 1450
Alexandria, VA 22313-1450
www.uspto.gov

DICKINSON WRIGHT PLLC
38525 WOODWARD AVENUE
SUITE 2000
BLOOMFIELD HILLS MI 48304-2970

MAILED
JUN 17 2010
OFFICE OF PETITIONS

In re Application of

Masao Koriyama

Application No. 10/708,560

Filed: March 11, 2004

Attorney Docket No. SIMTEK6879

DECISION ON PETITION

This is a decision on the petition under 37 CFR §1.137(b), April 26, 2010, to revive the above-identified application.

The petition is **granted**.

This application was held abandoned January 10, 2009, after no reply was received to the Notice of Allowance and Issue Fee Due mailed October 9, 2008. The notice set forth a statutory period of reply of three months from its mailing date. No response was received within the allowable period and the application became abandoned on January 10, 2009. A Notice of Abandonment was mailed February 2, 2009.

The issue fee and publication fee were received April 26, 2010.

Form PTOL-85B, filed April 26, 2010, is noted.

The application is being directed to the Office of Data Management for further processing.

Telephone inquiries concerning this decision may be directed to the undersigned at (571) 272-3222.

Kenya A. McLaughlin
Petitions Attorney
Office of Petitions

Enclosure: Notice Regarding Change of Power of Attorney

UNITED STATES PATENT AND TRADEMARK OFFICE

UNITED STATES DEPARTMENT OF COMMERCE
United States Patent and Trademark Office
Address: COMMISSIONER FOR PATENTS
P.O. Box 1450
Alexandria, Virginia 22313-1450
www.uspto.gov

APPLICATION NUMBER	FILING OR 371(C) DATE	FIRST NAMED APPLICANT	ATTY. DOCKET NO./TITLE
10/708,560	03/11/2004	Masao Koriyama	SIMTEK6879

CONFIRMATION NO. 2559

59582
DICKINSON WRIGHT PLLC
38525 WOODWARD AVENUE
SUITE 2000
BLOOMFIELD HILLS, MI 48304-2970

POA ACCEPTANCE LETTER

OC000000042113743

Date Mailed: 06/16/2010

NOTICE OF ACCEPTANCE OF POWER OF ATTORNEY

This is in response to the Power of Attorney filed 04/26/2010.

The Power of Attorney in this application is accepted. Correspondence in this application will be mailed to the above address as provided by 37 CFR 1.33.

/kathornton mclaughl/

Office of Data Management, Application Assistance Unit (571) 272-4000, or (571) 272-4200, or 1-888-786-0101

UNITED STATES PATENT AND TRADEMARK OFFICE

UNITED STATES DEPARTMENT OF COMMERCE
United States Patent and Trademark Office
Address: COMMISSIONER FOR PATENTS
P.O. Box 1450
Alexandria, Virginia 22313-1450
www.uspto.gov

APPLICATION NUMBER	FILING OR 371(C) DATE	FIRST NAMED APPLICANT	ATTY. DOCKET NO./TITLE
10/708,560	03/11/2004	Masao Koriyama	SIMTEK6879

CONFIRMATION NO. 2559

POWER OF ATTORNEY NOTICE

25776
ERNEST A. BEUTLER, ATTORNEY AT LAW
10 RUE MARSEILLE
NEWPORT BEACH, CA 92660

Date Mailed: 06/16/2010

NOTICE REGARDING CHANGE OF POWER OF ATTORNEY

This is in response to the Power of Attorney filed 04/26/2010.

- The Power of Attorney to you in this application has been revoked by the assignee who has intervened as provided by 37 CFR 3.71. Future correspondence will be mailed to the new address of record(37 CFR 1.33).

/kathornton mclaughl/

Office of Data Management, Application Assistance Unit (571) 272-4000, or (571) 272-4200, or 1-888-786-0101

UNITED STATES PATENT AND TRADEMARK OFFICE

Commissioner for Patents
United States Patent and Trademark Office
P.O. Box 1450
Alexandria, VA 22313-1450
www.uspto.gov

CANTOR COLBURN, LLP
20 CHURCH STREET, 22ND FLOOR
HARTFORD, CT 06103

COPY MAILED

DEC 17 2009

OFFICE OF PETITIONS

In re Application of
Darin R. OKERLUND, et *al.*
Application No. 10/708,564
Filed: March 11, 2004
Attorney Docket No. **144726**

DECISION GRANTING PETITION
UNDER 37 CFR 1.313(c)(2)

This is a decision on the petition under 37 CFR 1.313(c)(2), filed December 9, 2009, to withdraw the above-identified application from issue after payment of the issue fee.

The petition is **GRANTED**.

The above-identified application is withdrawn from issue for consideration of a submission under 37 CFR 1.114 (request for continued examination). See 37 CFR 1.313(c)(2).

Petitioner is advised that the issue fee paid on November 23, 2009 cannot be refunded. If, however, this application is again allowed, petitioner may request that it be applied towards the issue fee required by the new Notice of Allowance.[1]

Telephone inquiries should be directed to the undersigned at (571) 272-7253.

This application is being referred to Technology Center AU 3768 for processing of the request for continued examination under 37 CFR 1.114 and for consideration of the concurrently filed information disclosure statement.

/Monica A. Graves/
Petitions Examiner, Office of Petitions

[1] *The request to apply the issue fee to the new Notice may be satisfied by completing and returning the new Part B – Fee(s) Transmittal Form (along with any balance due at the time of submission). Petitioner is advised that the Issue Fee Transmittal Form must be completed and timely submitted to avoid abandonment of the application.*

UNITED STATES PATENT AND TRADEMARK OFFICE

COMMISSIONER FOR PATENTS
UNITED STATES PATENT AND TRADEMARK OFFICE
P.O. BOX 1450
ALEXANDRIA, VA 22313-1450
www.uspto.gov

Tracy W. Druce
Novak Druce & Quigg, LLP
1300 Eye Street, NW Suite 400
Washington, D.C. 20005

COPY MAILED

AUG 0 4 2005

OFFICE OF PETITIONS

In re Application of:
HJERTH et al.
Application No.: 10/708,590
Filing Date: March 12, 2004
Attorney's Docket No.: 07589.0160.PCUS00
For: FLEXIBLE ELEMENT

DECISION ON PETITION FOR REVIVAL OF ABANDONED APPLICATION UNDER 37 CFR 1.137(b)

This is a decision on the petition under 37 CFR 1.137(b), filed March 18, 2005 to revive the above-entitled application.

The petition is **GRANTED**.

The above-identified application became abandoned for failure to file a proper reply in a timely manner to the non-final Office action mailed August 18, 2004, which set a shortened statutory period for reply of three (3) months. A response was not filed and no extensions of time under the provisions of 37 CFR 1.136(a) were obtained. Accordingly, this application became abandoned at midnight on November 18, 2004.

The present petition satisfies the conditions for revival pursuant to the provisions of 37 CFR 1.137(b) in that (1) the reply in the form of a response to the Office action mailed August 18, 2004; (2) the petition fee; and (3) the required statement of unintentional delay have been received. Accordingly, the reply to the Office action of March 18, 2005 is accepted as having been unintentionally delayed.

Telephone inquiries concerning this decision should be directed to Attorney-Advisor, Anthony Smith at (571) 272-3298 or in his absence, the undersigned at (571) 272-3217.

The application is being referred back to Technology Center AU 3683 further processing.

Frances Hicks for

Brian Hearn
Petitions Examiner
Office Of Petitions

UNITED STATES PATENT AND TRADEMARK OFFICE

Commissioner for Patents
United States Patent and Trademark Office
P.O. Box 1450
Alexandria, VA 22313-1450
www.uspto.gov

NOVAK DRUCE AND QUIGG LLP (Volvo)
1000 LOUISIANA STREET
FIFTY-THIRD FLOOR
HOUSTON TX 77002

COPY MAILED

MAY 06 2008

OFFICE OF PETITIONS

ON PETITION

In re Application of
Kjell-owe Hjerth et al.
Application No. 10/708,590
Filed: March 12, 2004
Attorney Docket No. 7589.160.PCUS00

This is a decision on the petition filed September 19, 2007, under 37 CFR 1.181, to withdraw the holding of abandonment.

The petition under 37 CFR 1.181 is **GRANTED**.

The application was held abandoned on June 28, 2006 for failure to timely a response to the non-Final Office Action mailed March 27, 2006. A three (3) month period for reply was set. Accordingly, a Notice of Abandonment was mailed on February 1, 2007.

Petitioner asserts that a proper response in the form of an amendment with a three month extension of time was filed on September 27, 2006. Submitted as proof is a copy of the response said to have been filed on September 27, 2006.

A search of the application file and the USPTO records reveals that in fact, an amendment and three month extension of time were timely filed with a September 27, 2006 certificate of mail date but with a receipt date of November 13, 2006, and are of record.

Accordingly, the Notice of Abandonment mailed February 1, 2007 was mailed in error and is hereby withdrawn. No petition fee is due and none has been charged. The claims fees and extension of time fee have been properly charged to petitioner's crecit card.

This matter is being referred to Technology Center 3683 for treatment of the response filed November 13, 2006 with a September 27, 2006 certificate of mail date).

Telephone inquiries concerning this matter may be directed to the undersigned Petitions Attorney at (571) 272-3212.

Patricia Faison-Ball

Patricia Faison-Ball
Senior Petitions Attorney
Office of Petitions

UNITED STATES PATENT AND TRADEMARK OFFICE

Commissioner for Patents
United States Patent and Trademark Office
P.O. Box 1450
Alexandria, VA 22313-1450
www.uspto.gov

Date Mailed : August 21, 2007
Serial No. :10/708620
Patent No. :6869833 B1
Patent Issued : March 22, 2007
Inventor(s) : Hung-De Chen
Title :METHOD OF MANUFACTURING A THIN FILM TRANSISTOR OF A LIQUID CRYSTAL DISPLAY

Re: Request for Certificate of Correction

Consideration has been given your request for the issuance of a certificate of correction for the above-identified patent.

Respecting the alleged error noted in your request:

A petition under C.F.R. 1.182 is required to correct the alleged error in an inventor's address, since the inventor's address is printed in accordance with the *"Residence Address in assigned patents or P.O. Box Address for not assigned patents"* on the Declaration. The error is the result of applicant's failure to comply with requirements that the complete and correct address be indicated, no correction is in order here under the provisions of Rule 1.322 or 1.323, unless a petition is granted.

In view of the foregoing, your request is hereby denied.

Any petition under 37 CFR 1.182 should be directed to the attention of the Assistant Commissioner for Patents, using the following mailing address or FAX number.

By Mail: Commissioner of Patents and Trademarks
Mail Stop Petitions
Alexandria, VA 22313-1450

By Fax: (703) 308-6916
Attn.: Office of Petitions

Magdalene Talley
For Cecelia B. Newman, Supervisor
Decision and Certificate
Of Correction Branch
(703)308-9390 ext. 116
Fax (703) 746-4656

Winston Hsu
P.O. Box 506
Merrifield, VA 22116

CBN/mt

UNITED STATES PATENT AND TRADEMARK OFFICE

Commissioner for Patents
United States Patent and Trademark Office
P.O. Box 1450
Alexandria, VA 22313-1450
www.uspto.gov

NORTH AMERICA INTELLECTUAL
PROPERTY CORPORATION
P.O. BOX 506
MERRIFIELD, VA 22116

COPY MAILED

AUG 05 2008

In re Patent No. :
6,869,833 :
Application No. 10/708,620 : DECISION GRANTING PETITION
Filing Date: March 16, 2004 :
Issue Date: March 22, 2005 :
Attorney Docket No. **QDIP0005USA** :

This is a decision on the petition under 37 CFR 1.182, filed December 13, 2007, requesting issuance of a certificate of correction to correct the residence address of the sole inventor in the above-cited Letters of Patent.

The petition is granted.

A Certificate of Correction for the above-cited patent will be issued showing the residence address for the sole inventor as "Kinmen County (TW)".

The file is being forwarded to the Certificate of Corrections Branch for issuance of the aforementioned certificate of correction.

Kenya A. McLaughlin
Petitions Attorney
Office of Petitions

UNITED STATES PATENT AND TRADEMARK OFFICE

COMMISSIONER FOR PATENTS
UNITED STATES PATENT AND TRADEMARK OFFICE
P.O. BOX 1450
ALEXANDRIA, VA 22313-1450
www.uspto.gov

COPY MAILED

AUG 28 2007

OFFICE OF PETITIONS

WADDEY & PATTERSON, P.C.
1600 DIVISION STREET, SUITE 500
NASHVILLE, TN 37203

In re Application of
James R. Moore
Application No. 10/708,625
Filed: March 16, 2004
Attorney Docket No. N1105

ON PETITION

This is a decision in response to the petition, filed April 9, 2007, to revive the above-identified application under the provisions of 37 CFR 1.137(b).

The petition is **GRANTED**.

The application became abandoned for a failure to reply in a timely manner to a non-final Office action mailed September 11, 2006. A Notice of Abandonment was mailed on March 29, 2007. In response, on April 9, 2007, the present petition was filed.

The petition satisfies the conditions for revival pursuant to the provisions of 37 CFR 1.137(b) in that petitioner has supplied (1) the reply in the form of an amendment; (2) the petition fee of $750; and (3) an adequate statement of unintentional delay.

Extensions of time under 37 CFR 1.136 are available only if asked for prior to or with the response. In no case, however, may an applicant respond later than the maximum time period set by statute. Accordingly, if the question of abandonment arises when the provisions of 37 CFR 1.136 can no longer be used, then the application is abandoned when the unextended time for response has expired. Since, no extension of time fees are due on a petition for revival, petitioner is entitled to a refund of the $510 extension fees included with this petition.

Any request for refund must included a copy of this decision and be mailed to Mail Stop 16, Director of the U.S. Patent and Trademark Office, P. O. Box 1450, Alexandria, VA 22313-1450 or faxed to the Customer Service Help Desk at (571) 273-6500.

The application is being referred to Technology Center AU 1761 for consideration of the amendment filed April 9, 2007.

Telephone inquiries concerning this decision should be directed to the undersigned at (571) 272-3204. Inquiries relating to further prosecution should be directed to the Technology Center.

Sherry D. Brinkley
Petitions Examiner
Office of Petitions

SPE RESPONSE FOR CERTIFICATE OF CORRECTION

Paper No.: _____

DATE : November 2, 2006

TO SPE OF : ART UNIT 3711 Eugene L. Kim

SUBJECT : Request for Certificate of Correction for Appl. No.: 10/708,630 Patent No.: 7086923B2

Please respond to this request for a certificate of correction within 7 days.

Please review the requested changes/corrections as shown in the **COCIN** document(s) in the IFW application image. No new matter should be introduced, nor should the scope or meaning of the claims be changed.

Please complete the response (see below) and forward the completed response to scanning using document code **COCX**.

Antonio Johnson

Certificates of Correction Branch

703-308-9390 ext. 111

Thank You For Your Assistance

The request for issuing the above-identified correction(s) is hereby:

Note your decision on the appropriate box.

- ☒ **Approved** — **All** changes apply.
- ☐ **Approved in Part** — Specify below which changes **do not** apply.
- ☐ **Denied** — State the reasons for denial below.

Comments: _____

_____

_____

_____

_____

_____ 3711

SPE **Art Unit**

UNITED STATES PATENT AND TRADEMARK OFFICE

COMMISSIONER FOR PATENTS
UNITED STATES PATENT AND TRADEMARK OFFICE
P.O. BOX 1450
ALEXANDRIA, VA 22313-1450
www.uspto.gov

SEYFARTH SHAW
55 EAST MONROE STREET
SUITE 4200
CHICAGO IL 60603-5803

COPY MAILED

SEP 24 2004

OFFICE OF PETITIONS

In reApplication of	:
Schneider et al.	: DECISION ON
Application No. 10/708,631	: REQUEST
Filed: March 16, 2004	:
Attorney Docket No. 35041/400400	:

The above-identified application has been forwarded to this office for consideration of the paper styled "Request to Withdraw Early Publication Request" filed June 14, 2004. Applicant requests that the application be withdrawn from early publication and that the early publication fee be credited to the application.

The request is dismissed.

Applicant requested early publication on March 16, 2004. The application was scheduled for early publication on August 26, 2004. The application was published on August 5, 2004 as Patent Application Publication 2004/0153365 A1. It is too late to withdraw the early publication request as the application has already published.

Refunds are not granted by the Office for fees that were properly paid by an applicant. See 37 CFR 1.26(a). Applicant requested early publication and he was properly charged the publication fee.

The application will be examined in due course.

Telephone inquiries specific to this matter should be directed to the undersigned at (703) 308-8122.

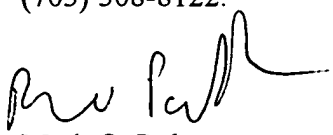

Mark O. Polutta
Legal Advisor
Office of Patent Legal Administration
Office of the Deputy Commissioner
for Patent Examination Policy

UNITED STATES PATENT AND TRADEMARK OFFICE

Commissioner for Patents
United States Patent and Trademark Office
P.O. Box 1450
Alexandria, VA 22313-1450
www.uspto.gov

Paper No. 101904

OCT 26 2004

NAIPO (NORTH AMERICA INTERNATIONAL PATENT OFFICE)
P.O. Box 506
Merrifield, VA 22116

In re Application of:
Kun-Hong Chen
Serial No.: 10/708,640
Filed: March 17, 2004
Attorney Docket No.: **ADTP0116USA0**

DECISION ON REQUEST TO WITHDRAW FROM RECORD

This is a decision on the request to withdraw as attorney/agent of record under 37 C.F.R. § 1.36, filed May 18, 2004.

A grantable request to withdraw as attorney of record must be signed by every attorney seeking to withdraw or contain a clear indication that one attorney is signing on behalf of others. A request to withdraw will not be approved unless at least thirty (30) days would remain between the date of approval and the later of the expiration date of a time to file a response or the expiration date of the maximum time period, which can be extended under 37 C.F.R. § 1.136(a).

The request meets all the above stated requirements. The request was signed by Mord Michael Lewis on behalf of himself.

The request is **APPROVED**.

Winston Hsu remains as attorney of record at this time.

All future communications from the Office will continue to be directed to the above address until otherwise notified by applicant.

Inquiries related to this decision should be directed to Clayton E. LaBalle at (571) 272-1594.

Clayton E. LaBalle, Special Programs Examiner
Technology Center 2800
Semiconductors, Electrical and Optical
Systems and Components

UNITED STATES PATENT AND TRADEMARK OFFICE

Commissioner for Patents
United States Patent and Trademark Office
P.O. Box 1450
Alexandria, VA 22313-1450
www.uspto.gov

CONNOLLY BOVE LODGE & HUTZ LLP
P.O. BOX 2207
WILMINGTON DE 19899-2207

COPY MAILED
AUG 2 9 2006
OFFICE OF PETITIONS

In re Patent No. 6,989,693 :
Issued: January 24, 2006 :
Application No. 10/708,645 : ON PETITION
Filed: March 17, 2004 :
Attorney Docket Number: 22171-00014-US :

This is a decision on the petition, filed April 6, 2006 to correct the assignee's name on the front of the Patent, which is being treated as a request under 37 CFR 3.81(b)[1]

The petition is **GRANTED**.

Petitioner states that the name of two additional assignees was inadvertently not included on the Fee(s) Transmittal form PTOL-85(b) at the time of payment of the issue fee. Accordingly, petitioner requests that a certificate of correction be issued to reflect the name of all assignees on the front page of the Letters Patent.

37 CFR 3.81(b), effective June 25, 2004, reads:

> *After payment of the issue fee:* Any request for issuance of an application in the name of the assignee submitted after the date of payment of the issue fee, and any request for a patent to be corrected to state the name of the assignee, must state that the assignment was submitted for recordation as set forth in § 3.11 before issuance of the patent, and must include a request for a certificate of correction under § 1.323 of this chapter (accompanied by the fee set forth in § 1.20(a) and the processing fee set forth in § 1.17(i) of this chapter.

A request for certificate of correction (and fee) as required by 3.81(b) was filed March 1, 2006 and dismissed in a decision mailed March 23, 2006 since the request was not accompanied by a petition under 37 CFR 3.81.

---

[1] *See* Official Gazette of June 22, 2004

Office assignment records however, reflect that with Leadtek Research Inc., Terry B.J. Kuo and Cheryl C.H. Yang are both assignees of record. Accordingly, as the request complies with the provisions of 37 CFR 3.81(b), it would be appropriate for a certificate of correction to issue.

The petition fee and the fee for the certificate of correction have been properly posted to the finance records for this patent.

Inquiries concerning this decision should be directed to the undersigned at (571) 272-3212. Any questions concerning the issuance of a certificate of correction should be directed to the Certificates of Correction Branch at (703) 305-8309.

This file is being referred to the Certificates of Correction Branch for issuance of a certificate of correction.

Patricia Faison-Ball

Patricia Faison-Ball
Senior Petitions Attorney
Office of Petitions

UNITED STATES PATENT AND TRADEMARK OFFICE

Commissioner for Patents
United States Patent and Trademark Office
P.O. Box 1450
Alexandria, VA 22313-1450
www.uspto.gov

NOVAK DRUCE & QUIGG, LLP
1300 EYE STREET NW
400 EAST TOWER
WASHINGTON, DC 20005

COPY MAILED

JUL 27 2006

OFFICE OF PETITIONS

In re Application of	:	
Sergi Yudanov	:	
Application No. 10/708,655	:	ON PETITION
Filed: March 17, 2004	:	
Attorney Docket No. 07589.0051.NPUS01	:	

This is a decision on the petition under 37 CFR 1.137(b), filed January 6, 2006, to revive the above-identified application.

The petition is **GRANTED**.

The above-identified application became abandoned for failure to reply in a timely manner to the non-final Office action mailed January 28, 2005, which set a shortened statutory period for reply of three (3) months. No extension of time under the provisions of 37 CFR 1.136(a) were obtained. Accordingly, the above-identified application became abandoned on April 29, 2005.

Telephone inquiries concerning this decision should be directed to Irvin Dingle at (571) 272-3210.

This matter is being referred to Technology Center AU 3747 for further processing.

Irvin Dingle
Petitions Examiner
Office of Petitions

UNITED STATES PATENT AND TRADEMARK OFFICE

Commissioner for Patents
United States Patent and Trademark Office
P.O. Box 1450
Alexandria, VA 22313-1450
www.uspto.gov

NOVAK DRUCE & QUIGG, LLP
1300 EYE STREET NW
400 EAST TOWER
WASHINGTON, DC 20005

COPY MAILED

JAN 25 2006

OFFICE OF PETITIONS

In re Application of

Udd, et al.

Application No. 10/708,656

Filed: March 17, 2004

Attorney Docket No. 07589.0052NPUS01

DECISION ON PETITION

This is a decision on the petition under 37 CFR 1.181 to withdraw the holding of abandonment.

The petition under 37 CFR 1.181(a) to withdraw the holding of abandonment is **granted**.

The above-cited application was held abandoned after no response was received to a "Notice Regarding Drawings" purportedly mailed May 20, 2005. The notice allowed a non-extendable period for reply of two-months from its mailing date. No response was received, and the application became abandoned on July 21, 2005. A Notice of Abandonment was mailed on October 7, 20005.

A review of the application file history gives no indication that the "Notice Regarding Drawings" was ever mailed. Accordingly, the holding of abandonment was improperly imposed and is withdrawn.

No petition fee is due.

The application file is being forwarded to the Office of Patent Publications, for further processing, including mailing of the "Notice Regarding Drawings".

Inquiries regarding this decision may be directed to the undersigned at (571) 272-3222.

Kenya A. McLaughlin
Petitions Attorney
Office of Petitions

UNITED STATES PATENT AND TRADEMARK OFFICE

Commissioner for Patents
United States Patent and Trademark Office
P.O. Box 1450
Alexandria, VA 22313-1450
www.uspto.gov

PETER LIN
88 BJORKLUND AVE
WORCESTER, MA 01605-1071

COPY MAILED

DEC 0 2 2008

OFFICE OF PETITIONS

In re Application of :
Peter Lin, et al. :
Application No. 10/708,696 : ON PETITION
Filed: March 18, 2004 :
Attorney Docket No. 2695 :

This is a decision on the petition under the unintentional provisions of 37 CFR 1.137(b), filed July 29, 2008, to revive the above-identified application.

The application became abandoned for failure to timely reply within the meaning of 37 CFR 1.113 to the final Office action, mailed January 22, 2008, which set a shortened statutory period for reply of three (3) months. No extensions of time under the provisions of 37 CFR 1.136(a) were obtained. Accordingly, the application became abandoned on April 23, 2008.

The petition is **DISMISSED**.

A grantable petition under 37 CFR 1.137(b) must be accompanied by: (1) the required reply, unless previously filed; (2) the petition fee as set forth in 37 CFR 1.17(m); (3) a statement that the entire delay in filing the required reply from the due date for the reply until the filing of a grantable petition pursuant to 37 CFR 1.137(b) was unintentional; and (4) any terminal disclaimer (and fee as set forth in 37 CFR 1.20(d)) required by 37 CFR 1.137(d). Where there is a question as to whether either the abandonment or the delay in filing a petition under 37 CFR 1.137 was unintentional, the Director may require additional information. See MPEP 711.03(c)(II)(C) and (D). The instant petition lacks item(s) (1) and (3).

With respect to item 1:

The proposed reply required for consideration of a petition to revive must be a Notice of Appeal (and appeal fee required by 37 CFR 41.20(b)(2), an amendment that prima facie places the application in condition for allowance, a Request for Continued Examination and submission (37 CFR 1.114), or the filing of a continuing application under 37 CFR 1.53(b). See MPEP 711.03(c)(II)(A)(2). The petition is not accompanied by the required reply. A courtesy copy of the previously mailed Advisory Action is attached.

With respect to item 3:

The statement of delay is not acceptable. In this regard, petitioner's attention is directed to 37 CFR 1.33(b), which states.

(b) Amendments and other papers. Amendments and other papers, except for written assertions pursuant to § 1.27(c)(2)(ii) of this part, filed in the application must be signed by:

(1) A registered patent attorney or patent agent of record appointed in compliance with § 1.32(b);

(2) A registered patent attorney or patent agent not of record who acts in a representative capacity under the provisions of § 1.34;

(3) An assignee as provided for under §3.71(b) of this chapter; or

(4) All of the applicants (§ 1.41(b)) for patent, unless there is an assignee of the entire interest and such assignee has taken action in the application in accordance with § 3.71 of this chapter.

An unsigned amendment (or other paper) or one not properly signed by a person having authority to prosecute the application is not entered. This applies, for instance, where the amendment (or other paper) is signed by only one of two applicants and the one signing has not been given a power of attorney by the other applicant.

Therefore, as the petition is not signed by all the inventors and the record herein fails to disclose that petitioner herein (Peter Lin) was ever given a power of attorney to act on behalf of inventor Said Tabet, or that he is an assignee of the entire interest and has complied with the provisions of 37 CFR 3.73(b), the petition is considered to not contain a proper statement of unintentional delay.

A review of the records also shows that petitioner filed drawings on March 3, 2008. The drawings fail to comply with the requirement of 37 CFR 1.84(d) which states:

Drawings: One or more application drawings shall be amended in the following manner: Any changes to an application drawing must be in compliance with § 1.84 and must be submitted on a replacement sheet of drawings which shall be an attachment to the amendment document and, in the top margin, labeled "**Replacement Sheet**". Any replacement sheet of drawings shall include all of the figures appearing on the immediate prior version of the sheet, even if only one figure is amended. Any new sheet of drawings containing an additional figure must be labeled in the top margin as "New Sheet". All changes to the drawings shall be explained, in detail, in either the drawing amendment or remarks section of the amendment paper.

(1) A marked-up copy of any amended drawing figure, including annotations indicating the changes made, may be included. The marked-up copy must be clearly labeled as "Annotated Sheet" and must be presented in the amendment or remarks section that explains the change to the drawings.

(2) A marked-up copy of any amended drawing figure, including annotations indicating the changes made, must be provided when required by the examiner.

Any request for reconsideration of this decision must be submitted within **TWO (2) MONTHS** from the mail date of this decision. Extensions of time under 37 CFR 1.136(a) are permitted. The reconsideration request should include a cover letter entitled "Renewed Petition under 37 CFR 1.137(b)." This is **not** a final agency action within the meaning of 5 U.S.C. § 704.

Further correspondence with respect to this matter should be addressed as follows:

By Mail:
Mail Stop PETITION
Commissioner for Patents
P. O. Box 1450
Alexandria, VA 22313-1450

By hand:
U. S. Patent and Trademark Office
Customer Service Window, Mail Stop Petitions
Randolph Building
401 Dulany Street
Alexandria, VA 22314

The centralized facsimile number is **(571) 273-8300.**

Telephone inquiries concerning this decision should be directed to the undersigned at (571) 272-1642.

April M. Wise
Petitions Examiner
Office of Petitions

Attachment: Courtesy copy of previously mailed Advisory Action

Advisory Action Before the Filing of an Appeal Brief	**Application No.** 10/708,696	**Applicant(s)** LIN ET AL.	
	Examiner OMAR F. FERNANDEZ RIVAS	**Art Unit** 2129	

--The MAILING DATE of this communication appears on the cover sheet with the correspondence address --

THE REPLY FILED 03 March 2008 FAILS TO PLACE THIS APPLICATION IN CONDITION FOR ALLOWANCE.

1. ☒ The reply was filed after a final rejection, but prior to or on the same day as filing a Notice of Appeal. To avoid abandonment of this application, applicant must timely file one of the following replies: (1) an amendment, affidavit, or other evidence, which places the application in condition for allowance; (2) a Notice of Appeal (with appeal fee) in compliance with 37 CFR 41.31; or (3) a Request for Continued Examination (RCE) in compliance with 37 CFR 1.114. The reply must be filed within one of the following time periods:
   a) ☐ The period for reply expires _____months from the mailing date of the final rejection.
   b) ☒ The period for reply expires on: (1) the mailing date of this Advisory Action, or (2) the date set forth in the final rejection, whichever is later. In no event, however, will the statutory period for reply expire later than SIX MONTHS from the mailing date of the final rejection.

   Examiner Note: If box 1 is checked, check either box (a) or (b). ONLY CHECK BOX (b) WHEN THE FIRST REPLY WAS FILED WITHIN TWO MONTHS OF THE FINAL REJECTION. See MPEP 706.07(f).

Extensions of time may be obtained under 37 CFR 1.136(a). The date on which the petition under 37 CFR 1.136(a) and the appropriate extension fee have been filed is the date for purposes of determining the period of extension and the corresponding amount of the fee. The appropriate extension fee under 37 CFR 1.17(a) is calculated from: (1) the expiration date of the shortened statutory period for reply originally set in the final Office action; or (2) as set forth in (b) above, if checked. Any reply received by the Office later than three months after the mailing date of the final rejection, even if timely filed, may reduce any earned patent term adjustment. See 37 CFR 1.704(b).

NOTICE OF APPEAL

2. ☐ The Notice of Appeal was filed on _____. A brief in compliance with 37 CFR 41.37 must be filed within two months of the date of filing the Notice of Appeal (37 CFR 41.37(a)), or any extension thereof (37 CFR 41.37(e)), to avoid dismissal of the appeal. Since a Notice of Appeal has been filed, any reply must be filed within the time period set forth in 37 CFR 41.37(a).

AMENDMENTS

3. ☒ The proposed amendment(s) filed after a final rejection, but prior to the date of filing a brief, will not be entered because
   (a) ☒ They raise new issues that would require further consideration and/or search (see NOTE below);
   (b) ☐ They raise the issue of new matter (see NOTE below);
   (c) ☐ They are not deemed to place the application in better form for appeal by materially reducing or simplifying the issues for appeal; and/or
   (d) ☐ They present additional claims without canceling a corresponding number of finally rejected claims.

   NOTE: *See Continuation Sheet.* (See 37 CFR 1.116 and 41.33(a)).
4. ☒ The amendments are not in compliance with 37 CFR 1.121. See attached Notice of Non-Compliant Amendment (PTOL-324).
5. ☐ Applicant's reply has overcome the following rejection(s): _____.
6. ☐ Newly proposed or amended claim(s) _____ would be allowable if submitted in a separate, timely filed amendment canceling the non-allowable claim(s).
7. ☒ For purposes of appeal, the proposed amendment(s): a) ☒ will not be entered, or b) ☐ will be entered and an explanation of how the new or amended claims would be rejected is provided below or appended.
   The status of the claim(s) is (or will be) as follows:
   Claim(s) allowed: _____.
   Claim(s) objected to: _____.
   Claim(s) rejected: *1-46*.
   Claim(s) withdrawn from consideration: _____.

AFFIDAVIT OR OTHER EVIDENCE

8. ☐ The affidavit or other evidence filed after a final action, but before or on the date of filing a Notice of Appeal will not be entered because applicant failed to provide a showing of good and sufficient reasons why the affidavit or other evidence is necessary and was not earlier presented. See 37 CFR 1.116(e).
9. ☐ The affidavit or other evidence filed after the date of filing a Notice of Appeal, but prior to the date of filing a brief, will not be entered because the affidavit or other evidence failed to overcome all rejections under appeal and/or appellant fails to provide a showing a good and sufficient reasons why it is necessary and was not earlier presented. See 37 CFR 41.33(d)(1).
10. ☐ The affidavit or other evidence is entered. An explanation of the status of the claims after entry is below or attached.

REQUEST FOR RECONSIDERATION/OTHER

11. ☐ The request for reconsideration has been considered but does NOT place the application in condition for allowance because: _____.
12. ☐ Note the attached Information *Disclosure Statement*(s). (PTO/SB/08) Paper No(s). _____
13. ☐ Other: _____.

/David R Vincent/
Supervisory Patent Examiner, Art Unit 2129

/Omar F. Fernández Rivas/
Examiner, Art Unit 2129

Continuation of 3. NOTE: The claims contain subject matter that was not described in the previous set of claims and therefore would require further search and consideration by the Examiner. The Amendments also fail to solve the issues raised in the Final Office Action and therefore all the objections and rejections contained therein stand .

UNITED STATES PATENT AND TRADEMARK OFFICE

Commissioner for Patents
United States Patent and Trademark Office
P.O. Box 1450
Alexandria, VA 22313-1450
www.uspto.gov

PETER LIN
88 BJORKLUND AVE
WORCESTER, MA 01605-1071

COPY MAILED

MAR 0 2 2009

OFFICE OF PETITIONS

In re Application of :
Peter Lin, et al. :
Application No. 10/708,696 :
Filed: March 18, 2004 :
Attorney Docket No. 2695 :

ON PETITION

This is a decision on the renewed petition under the unintentional provisions of 37 CFR 1.137(b), filed December 29, 2008, to revive the above-identified application.

The application became abandoned for failure to timely reply within the meaning of 37 CFR 1.113 to the final Office action, mailed January 22, 2008, which set a shortened statutory period for reply of three (3) months. No extensions of time under the provisions of 37 CFR 1.136(a) were obtained. Accordingly, the application became abandoned on April 23, 2008.

The petition is **DISMISSED**.

A grantable petition under 37 CFR 1.137(b) must be accompanied by: (1) the required reply, unless previously filed; (2) the petition fee as set forth in 37 CFR 1.17(m); (3) a statement that the entire delay in filing the required reply from the due date for the reply until the filing of a grantable petition pursuant to 37 CFR 1.137(b) was unintentional; and (4) any terminal disclaimer (and fee as set forth in 37 CFR 1.20(d)) required by 37 CFR 1.137(d). Where there is a question as to whether either the abandonment or the delay in filing a petition under 37 CFR 1.137 was unintentional, the Director may require additional information. See MPEP 711.03(c)(II)(C) and (D). The instant petition lacks item(s) (1).

The amendment filed is not acceptable. In this regard, petitioner's attention is directed to 37 CFR 1.33(b), which states.

(b) Amendments and other papers. Amendments and other papers, except for written assertions pursuant to § 1.27(c)(2)(ii) of this part, filed in the application must be signed by:

(1) A registered patent attorney or patent agent of record appointed in compliance with § 1.32(b);

(2) A registered patent attorney or patent agent not of record who acts in a representative capacity under the provisions of § 1.34;

(3) An assignee as provided for under §3.71(b) of this chapter; or

(4) All of the applicants (§ 1.41(b)) for patent, unless there is an assignee of the entire interest and such assignee has taken action in the application in accordance with § 3.71 of this chapter.

An unsigned amendment (or other paper) or one not properly signed by a person having authority to prosecute the application is not entered. This applies, for instance, where the amendment (or other paper) is signed by only one of two applicants and the one signing has not been given a power of attorney by the other applicant.

Therefore, as the required reply filed with the petition on December 29, 2008 is unsigned by all the inventors, the amendment is considered to be an improper reply.

Any request for reconsideration of this decision must be submitted within **TWO (2) MONTHS** from the mail date of this decision. Extensions of time under 37 CFR 1.136(a) are permitted. The reconsideration request should include a cover letter entitled "Renewed Petition under 37 CFR 1.137(b)." This is **not** a final agency action within the meaning of 5 U.S.C. § 704.

Further correspondence with respect to this matter should be addressed as follows:

By Mail:
Mail Stop PETITION
Commissioner for Patents
P. O. Box 1450
Alexandria, VA 22313-1450

By hand:
U. S. Patent and Trademark Office
Customer Service Window, Mail Stop Petitions
Randolph Building
401 Dulany Street
Alexandria, VA 22314

The centralized facsimile number is **(571) 273-8300.**

Telephone inquiries concerning this decision should be directed to the undersigned at (571) 272-1642.

April M. Wise
Petitions Examiner
Office of Petitions

UNITED STATES PATENT AND TRADEMARK OFFICE

Commissioner for Patents
United States Patent and Trademark Office
P.O. Box 1450
Alexandria, VA 22313-1450
www.uspto.gov

PETER LIN
88 BJORKLUND AVE
WORCESTER, MA 01605-1071

MAILED

MAY 28 2009

OFFICE OF PETITIONS

In re Application of :
Peter Lin, et al. :
Application No. 10/708,696 : ON PETITION
Filed: March 18, 2004 :
Attorney Docket No. :

This is a decision on the renewed petition under the unintentional provisions of 37 CFR 1.137(b), filed March 30, 2009, to revive the above-identified application.

The application became abandoned for failure to timely reply within the meaning of 37 CFR 1.113 to the final Office action, mailed January 22, 2008, which set a shortened statutory period for reply of three (3) months. No extensions of time under the provisions of 37 CFR 1.136(a) were obtained. Accordingly, the application became abandoned on April 23, 2008.

The petition is **DISMISSED**.

A grantable petition under 37 CFR 1.137(b) must be accompanied by: (1) the required reply, unless previously filed; (2) the petition fee as set forth in 37 CFR 1.17(m); (3) a statement that the entire delay in filing the required reply from the due date for the reply until the filing of a grantable petition pursuant to 37 CFR 1.137(b) was unintentional; and (4) any terminal disclaimer (and fee as set forth in 37 CFR 1.20(d)) required by 37 CFR 1.137(d). Where there is a question as to whether either the abandonment or the delay in filing a petition under 37 CFR 1.137 was unintentional, the Director may require additional information. See MPEP 711.03(c)(II)(C) and (D). The instant petition lacks item(s) (1).

The proposed reply required for consideration of a petition to revive must be a Notice of Appeal (and appeal fee required by 37 CFR 41.20(b)(2)), an amendment that prima facie places the application in condition for allowance, a Request for Continued Examination (RCE) and submission (37 CFR 1.114), or the filing of a continuing application under 37 CFR 1.53(b). See MPEP 711.03(c)(II)(A)(2). Since the amendment submitted does not prima facie place the application in condition for allowance, the reply required must be a Notice of Appeal (and appeal fee), RCE, or the filing of a continuing application under 37 CFR 1.53(b).

Any request for reconsideration of this decision must be submitted within **TWO (2) MONTHS** from the mail date of this decision. Extensions of time under 37 CFR 1.136(a) are permitted. The reconsideration request should include a cover letter entitled "Renewed Petition under 37 CFR 1.137(b)." This is **not** a final agency action within the meaning of 5 U.S.C. § 704.

Further correspondence with respect to this matter should be addressed as follows:

By Mail:
Mail Stop PETITION
Commissioner for Patents
P. O. Box 1450
Alexandria, VA 22313-1450

By hand:
U. S. Patent and Trademark Office
Customer Service Window, Mail Stop Petitions
Randolph Building
401 Dulany Street
Alexandria, VA 22314

The centralized facsimile number is **(571) 273-8300.**

Telephone inquiries concerning this decision should be directed to the undersigned at (571) 272-1642. All other inquiries concerning the examination or status of this application should be directed to the Technology Center.

April M. Wise
Petitions Examiner
Office of Petitions

Attachment: copy of Advisory Action

Advisory Action Before the Filing of an Appeal Brief	**Application No.** 10/708,696	**Applicant(s)** LIN ET AL.	
	Examiner OMAR F. FERNANDEZ RIVAS	**Art Unit** 2129	

--The MAILING DATE of this communication appears on the cover sheet with the correspondence address --

THE REPLY FILED 30 March 2009 FAILS TO PLACE THIS APPLICATION IN CONDITION FOR ALLOWANCE.

1. ☐ The reply was filed after a final rejection, but prior to or on the same day as filing a Notice of Appeal. To avoid abandonment of this application, applicant must timely file one of the following replies: (1) an amendment, affidavit, or other evidence, which places the application in condition for allowance; (2) a Notice of Appeal (with appeal fee) in compliance with 37 CFR 41.31; or (3) a Request for Continued Examination (RCE) in compliance with 37 CFR 1.114. The reply must be filed within one of the following time periods:
   a) ☒ The period for reply expires *3* months from the mailing date of the final rejection.
   b) ☐ The period for reply expires on: (1) the mailing date of this Advisory Action, or (2) the date set forth in the final rejection, whichever is later. In no event, however, will the statutory period for reply expire later than SIX MONTHS from the mailing date of the final rejection.

   Examiner Note: If box 1 is checked, check either box (a) or (b). ONLY CHECK BOX (b) WHEN THE FIRST REPLY WAS FILED WITHIN TWO MONTHS OF THE FINAL REJECTION. See MPEP 706.07(f).

Extensions of time may be obtained under 37 CFR 1.136(a). The date on which the petition under 37 CFR 1.136(a) and the appropriate extension fee have been filed is the date for purposes of determining the period of extension and the corresponding amount of the fee. The appropriate extension fee under 37 CFR 1.17(a) is calculated from: (1) the expiration date of the shortened statutory period for reply originally set in the final Office action; or (2) as set forth in (b) above, if checked. Any reply received by the Office later than three months after the mailing date of the final rejection, even if timely filed, may reduce any earned patent term adjustment. See 37 CFR 1.704(b).

NOTICE OF APPEAL

2. ☐ The Notice of Appeal was filed on _____. A brief in compliance with 37 CFR 41.37 must be filed within two months of the date of filing the Notice of Appeal (37 CFR 41.37(a)), or any extension thereof (37 CFR 41.37(e)), to avoid dismissal of the appeal. Since a Notice of Appeal has been filed, any reply must be filed within the time period set forth in 37 CFR 41.37(a).

AMENDMENTS

3. ☒ The proposed amendment(s) filed after a final rejection, but prior to the date of filing a brief, will not be entered because
   (a) ☒ They raise new issues that would require further consideration and/or search (see NOTE below);
   (b) ☐ They raise the issue of new matter (see NOTE below);
   (c) ☐ They are not deemed to place the application in better form for appeal by materially reducing or simplifying the issues for appeal; and/or
   (d) ☐ They present additional claims without canceling a corresponding number of finally rejected claims.

   NOTE: _____. (See 37 CFR 1.116 and 41.33(a)).
4. ☐ The amendments are not in compliance with 37 CFR 1.121. See attached Notice of Non-Compliant Amendment (PTOL-324).
5. ☐ Applicant's reply has overcome the following rejection(s): _____.
6. ☐ Newly proposed or amended claim(s) _____ would be allowable if submitted in a separate, timely filed amendment canceling the non-allowable claim(s).
7. ☒ For purposes of appeal, the proposed amendment(s): a) ☒ will not be entered, or b) ☐ will be entered and an explanation of how the new or amended claims would be rejected is provided below or appended.
   The status of the claim(s) is (or will be) as follows:
   Claim(s) allowed: _____.
   Claim(s) objected to: _____.
   Claim(s) rejected: *1-46*.
   Claim(s) withdrawn from consideration: _____.

AFFIDAVIT OR OTHER EVIDENCE

8. ☐ The affidavit or other evidence filed after a final action, but before or on the date of filing a Notice of Appeal will not be entered because applicant failed to provide a showing of good and sufficient reasons why the affidavit or other evidence is necessary and was not earlier presented. See 37 CFR 1.116(e).
9. ☐ The affidavit or other evidence filed after the date of filing a Notice of Appeal, but prior to the date of filing a brief, will not be entered because the affidavit or other evidence failed to overcome all rejections under appeal and/or appellant fails to provide a showing a good and sufficient reasons why it is necessary and was not earlier presented. See 37 CFR 41.33(d)(1).
10. ☐ The affidavit or other evidence is entered. An explanation of the status of the claims after entry is below or attached.

REQUEST FOR RECONSIDERATION/OTHER

11. ☐ The request for reconsideration has been considered but does NOT place the application in condition for allowance because:

    _____.
12. ☐ Note the attached Information *Disclosure Statement*(s). (PTO/SB/08) Paper No(s). _____
13. ☒ Other: See Continuation Sheet.

DAVID R. VINCENT
SUPERVISORY PATENT EXAMINER
4/30/09

/Omar F. Fernández Rivas/
Examiner, Art Unit 2129

Continuation of 13. Other: The claims contain subject matter that was not described in the previous set of claims examined and therefore would require further search and consideration by the Examiner. The Amendments also fail to solve the issues raised in the Final Office Action and therefore all the objections and rejections contained therein stand.

UNITED STATES PATENT AND TRADEMARK OFFICE

COMMISSIONER FOR PATENTS
UNITED STATES PATENT AND TRADEMARK OFFICE
P.O. BOX 1450
ALEXANDRIA, VA 22313-1450
www.uspto.gov

NAIPO (NORTH AMERICA INTERNATIONAL PATENT OFFICE)
P.O. BOX 506
MERRIFIELD, VA 22116

MAIL

NOV 18 2004

DIRECTOR OFFICE
TECHNOLOGY CENTER 2600

In re application of:
Chen-Huang Fan, et al.
Application No. 10/708,698
Filed: March 19, 2004
For: METHOD AND RELATED APPARATUS FOR REDUCING CELL PHONE POWER CONSUMPTION

DECISION ON REQUEST TO WITHDRAW FROM RECORD

This is a decision on the request for withdrawal as attorney/agent and change of correspondence address filed on May 18, 2004

A grantable request to withdraw as attorney/agent of record must:
(1) indicate the present mailing address of the attorney(s)/agent(s) who seek(s) to withdraw, and
(2) be signed by each attorney/agent seeking to withdraw or clearly be signed on their behalf, and
(3) be *approved* at least thirty (30) days prior to the maximum extendable period for response to any outstanding Office Action, and
(4) indicate the address to which future correspondence should be mailed.

Petitioner has satisfied the requirements for successfully requesting withdrawal. Accordingly, the request is **GRANTED.**

Mord Michael Lewis have been withdrawn.

All future communications from the Office will continue to be directed to the address listed above until otherwise notified by applicant. Applicant is reminded of the obligation to promptly notify the Patent and Trademark Office of any change in correspondence address to ensure receipt of all communications from the Office.

Kenneth A. Wieder
Special Program Examiner
Technology Center 2600
Communications
(571) 272-2986

UNITED STATES PATENT AND TRADEMARK OFFICE

COMMISSIONER FOR PATENTS
UNITED STATES PATENT AND TRADEMARK OFFICE
P.O. BOX 1450
ALEXANDRIA, VA 22313-1450
www.uspto.gov

MAIL

JUL 22 2004

DIRECTOR OFFICE
TECHNOLOGY CENTER 2600

NAIPO (NORTH AMERICA INTERNATIONAL PATENT OFFICE)
P.O. BOX 506
MERRIFIELD, VA 22116

Application No. 10/708,706

Filed: 3/19/04

DECISION ON REQUEST TO WITHDRAW AS ATTORNEY

This is a decision on the request to withdraw as attorney/agent of record filed on May 18, 2004.

A grantable request to withdraw as attorney/agent of record must do the following:
(1) indicate the present mailing address of the attorney(s)/agent(s) who seek(s) to withdraw, and
(2) be signed by each attorney/agent seeking to withdraw or clearly be signed on their behalf, and
(3) be *approved* at least thirty (30) days prior to the maximum extendable period for response to any outstanding Office Action, and
(4) indicate the address to which future correspondence should be mailed.

The requester, Mr. Michael Mord Lewis, has satisfied the requirements for successfully requesting withdrawal.

Accordingly, the Request to Withdraw as Attorney is **GRANTED**.

Mr. Winston Hsu remains of record.

All future correspondence will continue to be directed to the address listed above until such a time as applicant properly notifies the Patent and Trademark Office of a change of address. The application is being returned to Technology Center 2600 central files to await action by the examiner in due course.

Krista Zele
Special Program Examiner
Technology Center 2600
Communications
(703) 305-4701

UNITED STATES PATENT AND TRADEMARK OFFICE

Commissioner for Patents
United States Patent and Trademark Office
P.O. Box 1450
Alexandria, VA 22313-1450
www.uspto.gov

SCHLUMBERGER OILFIELD SERVICES
200 GILINGHAM LANE
MD 200-9
SUGAR LAND, TX 77478

COPY MAILED

FEB 26 2008

In re Application of :
Thomas D. BARBER, et al :
Application No. 10/708,719 : DECISION ON PETITION
Filed: March 19, 2004 :
Attorney Docket No. 20.2903 :

This is a decision on the petition under the unintentional provisions of 37 CFR 1.137(b), filed January 8, 2008, to revive the above-identified application.

The petition is **GRANTED**.

The application became abandoned for failure to timely pay the issue and publication fees on or before January 2, 2008. As required by the Notice of Allowance and Fee(s) Due, mailed October 2, 2007, which set a statutory period for reply of three (3) months. Accordingly, the application became abandoned on January 3, 2008.

The petition satisfies the requirements of 37 CFR 1.137(b) in that petitioner has supplied (1) the reply in the form of payment of the Issue Fee of $1440 and Publication Fee of $300; (2) the petition fee of $1540; and (3) the required statement of unintentional delay.

Telephone inquiries concerning this decision should be directed to Diane Goodwyn at (571) 272-6735.

The application is being referred to the Office of Patent Publication.

April Wise
Petitions Examiner
Office of Petitions

UNITED STATES PATENT AND TRADEMARK OFFICE

Commissioner for Patents
United States Patent and Trademark Office
P.O. Box 1450
Alexandria, VA 22313-1450
www.uspto.gov

LIPA ROITMAN
LEVI ESHKOL ST. 29, APARTMENT 18
NETANYA IL ISRAEL

COPY MAILED

DEC 14 2006

OFFICE OF PETITIONS

In re Application of
Lipa Leon Roitman
Application No. 10/708,732
Filed: March 22, 2004
Title of Invention: **[NOVEL REACTIONS AND THE PRODUCTS OF SUCH REACTIONS]**

ON PETITION

This is a decision on the petition under 37 CFR 1.137(b), filed May 3, 2006 and supplemented June 7, 2006, to revive the above identified application.

The petition is **DISMISSED**.

Any request for reconsideration of this decision must be submitted within TWO (2) MONTHS from the mail date of this decision. Extensions of time under 37 CFR 1.136(a) are permitted. The reconsideration request should include a cover letter entitled "Renewed Petition under 37 CFR 1.137(b)".This is **not** a final agency decision.

This application became abandoned February 3, 2006 for failure to file a timely response to the Restriction Requirement mailed November 2, 2005. Accordingly, a Notice of Abandonment was mailed March 15, 2006.

Petitioner files the instant petition under 37 CFR 1.137(b) [1] however, the petition lacks item (1) above.

---

[1] Effective December 1, 1997, the provisions of 37 CFR 1.137(b) now provide that where the delay in reply was unintentional, a petition may be filed to revive an abandoned application or a lapsed patent pursuant to 37 CFR 1.137(b). A grantable petition filed under the provisions of 37 CFR 1.137(b) must be accompanied by:

(1) the required reply, unless previously filed. In a nonprovisional application abandoned for failure to prosecute, the required reply may be met by the filing of a continuing application. In an application or patent, abandoned or lapsed for failure to pay the issue fee or any portion thereof, the required reply must be the payment of the issue fee or any outstanding balance thereof.

(2) the petition fee as set forth in 37 CFR 1.17(m);

(3) a statement that the entire delay in filing the required reply from the due date for the reply until the filing of a grantable petition pursuant to 37 CFR 1.137(b) was unintentional. The Commissioner may required additional information where there is a question whether the delay was unintentional; and

(4) any terminal disclaimer (and fee as set forth in 37 CFR 1.20(d)) required pursuant to 37 CFR 1.137(c)).

The Office Action mailed November 2, 2005 required the filing of a election to the Restriction Requirement. Petitioners filed the petition and the petition fee but not the response to the Office Action.

This application will remain in an abandoned status until such time as the requirements set out in the Restriction Requirement mailed November 2, 2005 have been complied with.

Further correspondence with respect to this matter should be addressed as follows:

By mail: Mail Stop Petition
Commissioner for Patents
P.O. Box 1450
Alexandria, VA 22313-1450

By FAX: (571) 273-8300
ATTN: Office of Petitions

Telephone inquiries concerning this matter may be directed to the undersigned Petitions Attorney at (571) 272-3212.

Patricia Faison-Ball
Senior Petitions Attorney
Office of Petitions

UNITED STATES PATENT AND TRADEMARK OFFICE

Commissioner for Patents
United States Patent and Trademark Office
P.O. Box 1450
Alexandria, VA 22313-1450
www.uspto.gov

LUNDEEN & DICKINSON, LLP
P.O. BOX 131144
HOUSTON, TX 77219-1144

COPY MAILED

DEC 20 2006

OFFICE OF PETITIONS

In re Application of :
Vernon E. Kauffman et al :
Application No. 10/708,752 : ON PETITION
Filed: March 23, 2004 :
Attorney Docket No. SPE23 :

This is a decision on the petition under 37 CFR 1.137(b), filed September 11, 2006, to revive the above-identified application.

The petition is **GRANTED.**

The above-identified application became abandoned for failure to submit the Issue fee in a timely manner in reply to the Notice of Allowance mailed May 26, 2006, which set a statutory period for reply of three (3) months. Accordingly, the above-identified application became abandoned on August 27, 2006.

The petition satisfies the conditions for revival pursuant to the provisions of 37 CFR 1.137(b) in that (1) the reply in the form of payment of the issue fee; (2) the petition fee; and (3) the required statement of unintentional delay have been received. Accordingly, the issue fee is accepted as having been unintentionally delayed.

Telephone inquiries concerning this decision should be directed to the undersigned at (571) 272-3210.

This matter is being referred to the Publishing Division for further processing.

Irvin Dingle
Petitions Examiner
Office of Petitions

UNITED STATES PATENT AND TRADEMARK OFFICE

Commissioner for Patents
United States Patent and Trademark Office
P.O. Box 1450
Alexandria, VA 22313-1450
www.uspto.gov

MARVIN SHANNON
3579 EAST FOOTHILL BLVD, #328
PASADENA CA 91107

COPY MAILED

AUG 2 5 2005

OFFICE OF PETITIONS

In re Application of :
Marvin SHANNON et. al. :
Application No. 10/708,757 :
Filed: March 24, 2004 :
Attorney Docket No. lms-wb-2004-03-23 :

DECISION ON PETITION
UNDER 37 CFR 1.137(b)

This is a decision on the petition under 37 CFR 1.137(b), filed June 22, 2005, to revive the above-identified application.

The petition is **DISMISSED**.

Any request for reconsideration of this decision must be submitted within TWO (2) MONTHS from the mail date of this decision. Extensions of time under 37 CFR 1.136(a) are permitted. The reconsideration request should include a cover letter entitled "Renewed Petition under 37 CFR 1.137(b)." This is **not** a final agency action within the meaning of 5 U.S.C. § 704.

The above-identified application became abandoned for failure to reply in a timely manner to the Notice to File Corrected Application Papers mailed September 8, 2004. The Notice sets a period for reply of two (2) months from the mail date of the Notice. No extensions of time under the provisions of 37 CFR 1.136(a) were obtained. Accordingly, the application became abandoned on November 9, 2004.

A grantable petition under 37 CFR 1.137(b) must be accompanied by: (1) the required reply, unless previously filed; (2) the petition fee as set forth in 37 CFR 1.17(m); (3) a statement that the entire delay in filing the required reply from the due date for the reply until the filing of a grantable petition pursuant to 37 CFR 1.137(b) was unintentional; and (4) any terminal disclaimer (and fee as set forth in 37 CFR 1.20(d)) required by 37 CFR 1.137(d). Where there is a question as to whether either the abandonment or the delay in filing a petition under 37 CFR 1.137 was unintentional, the Commissioner may require additional information. See MPEP 711.03(c)(III)(C) and (D).

The instant petition lacks item(s): (2) the petition fee as set forth in 37 CFR 1.17(m). The required petition fee by a small entity is $750. The $665 submitted with the petition on June 22, 2005 has been credited to the above-identified application, but this amount is insufficient to cover the petition fee as set forth in 37 CFR 1.17(m). The petitioner should submit $85 along with any request for reconsideration of this decision as specified above to renew the petition under 37 CFR 1.137(b).

Further correspondence with respect to this matter should be addressed as follows:

By Mail:
Mail Stop PETITION
Commissioner for Patents
P. O. Box 1450
Alexandria, VA 22313-1450

By hand:
U. S. Patent and Trademark Office
Customer Service Window, Mail Stop Petitions
Randolph Building
401 Dulany Street
Alexandria, VA 22314

The centralized facsimile number is **(571) 273-8300.**

Telephone inquiries concerning this decision should be directed to Amelia Au at (571) 272-7414.

Brian Hearn, for

Frances Hicks
Lead Petitions Examiner
Office of Petitions

UNITED STATES PATENT AND TRADEMARK OFFICE

Commissioner for Patents
United States Patent and Trademark Office
P.O. Box 1450
Alexandria, VA 22313-1450
www.uspto.gov

MARVIN SHANNON
3579 EAST FOOTHILL BLVD, #328
PASADENA CA 91107

COPY MAILED

DEC 0 2 2005

OFFICE OF PETITIONS

In re Application of :
Marvin SHANNON et. al. :
Application No. 10/708,757 :
Filed: March 24, 2004 :
Attorney Docket No. lms-wb-2004-03-23 :

DECISION ON PETITION
UNDER 37 CFR 1.137(b)

This is a decision on the RENEWED petition under 37 CFR 1.137(b), filed October 24, 2005, to revive the above-identified application.

The petition is **GRANTED**.

The above-identified application became abandoned for failure to reply in a timely manner to the Notice to File Corrected Application Papers mailed September 8, 2004. The Notice sets a period for reply of two (2) months from the mail date of the Notice. No extensions of time under the provisions of 37 CFR 1.136(a) were obtained. Accordingly, the application became abandoned on November 9, 2004.

The petition satisfies the conditions for revival pursuant to the provisions of 37 CFR 1.137(b) in that (1) the reply in the form of replacement drawings as set forth in the Notice; (2) the petition fee of $750; and (3) the required statement of unintentional delay have been received.

Accordingly, the response to the Notice to File Corrected Application Papers is accepted as having been unintentionally delayed.

Telephone inquiries concerning this decision should be directed to Amelia Au at (571) 272-7414.

The application file is being referred to the Office of Initial Patent Examination.

Francis Hicks
Lead Petitions Examiner
Office of Petitions

UNITED STATES PATENT AND TRADEMARK OFFICE

UNITED STATES DEPARTMENT OF COMMERCE
United States Patent and Trademark Office
Address: COMMISSIONER FOR PATENTS
P.O. Box 1450
Alexandria, Virginia 22313-1450
www.uspto.gov

CANTOR COLBURN, LLP
20 Church Street
22nd Floor
Hartford, CT 06103

Mail Date: 04/20/2010

Applicant	: Gopal B. Avinash	: DECISION ON REQUEST FOR
Patent Number	: 7623728	: RECALCULATION of PATENT
Issue Date	: 11/24/2009	: TERM ADJUSTMENT IN VIEW
Appliction No	: 10/708,771	: OF WYETH AND NOTICE OF INTENT TO
Filed	: 03/24/2004	: ISSUE CERTIFICATE OF CORRECTION
		:

The Request for Recalculation is **GRANTED** to the extent indicated.

The patent term adjustment has been determined to be **1645** days. The USPTO will *sua sponte* issue a certificate of correction reflecting the amount of PTA days determined by the recalculation.

Prior to the issuance of the certificate of correction, the USPTO will afford patentee an opportunity to be heard and request reconsideration. Accordingly, patentee has **one month or thirty (30) days**, whichever is longer, to file a request for reconsideration of this patent term adjustment calculation. See 35 U.S.C. 154(b)(3)(B)(ii) and 37 CFR 1.322(a)(4). No extensions of time will be granted under 37 CFR 1.136.

Patentee should use document code PET.OP if electronically filing a request for reconsideration of this patent term adjustment calculation. The patentee must also include the information required by 37 CFR 1.705(b)(2) and the fee required by 37 CFR 1.18(e). If patentee does not file a timely request for reconsideration of this patent term adjustment calculation including the information required by 37 CFR 1.705(b)(2) and the fee required by 37 CFR 1.18(e), the USPTO will issue a certificate of correction reflecting the PTA determination noted above.

Patentee should be aware that in order to preserve the right to review in the United States District Court for the District of Columbia of the USPTO patent term adjustment determination, patentee must ensure that he or she also take the steps required under 35 U.S.C. 154(b)(4)(A) in a timely manner. Nothing in the request for recalculation should be construed as providing an alternative time frame for commencing a civil action under 35 U.S.C. 154(b)(4)(A).

Any questions concerning this decision should be directed to the Office of Patent Legal Administration at 571-272-7702.

B/ ITW

OIPE IAP41
OCT 2 3 2008
PATENT & TRADEMARK OFFICE

IN THE UNITED STATES PATENT AND TRADEMARK OFFICE	
In re application of: **Joseph O. Marsh, et al.**	Date: **September 15, 2008**
Serial Number: **10/708,788**	Examiner: **Roberto Velez**
Filed: **3/25/2004**	Group Art Unit: **2829**
Title: **System and Method of digitally testing an analog driver circuit**	IBM Corporation D/18G, B/321, Zip 482 2070 Route 52 Hopewell Junction, NY 12533-6531

AMENDMENT UNDER 37C.F.R. 312 AFTER ALLOWANCE

Please enter
Roberto Velez
11/10/2008

Commissioner of Patents and Trademarks
P. O. Box 1450
Alexandria, VA 22313-1450

Sir:

Responsive to the Notice of Allowance and Fees due dated July 23, 2008, the following Amendment is being submitted.

Kindly amend the Specification as follows:

UNITED STATES PATENT AND TRADEMARK OFFICE

COMMISSIONER FOR PATENTS
UNITED STATES PATENT AND TRADEMARK OFFICE
P.O. BOX 1450
ALEXANDRIA, VA 22313-1450
www.uspto.gov

NAIPO (NORTH AMERICA INTERNATIONAL PATENT OFFICE)
P.O. BOX 506
MERRIFIELD, VA 22116

MAIL

NOV 1 9 2004

DIRECTOR OFFICE
TECHNOLOGY CENTER 2600

In re application of:
Chia-Hung Lin
Application No. 10/708,797
Filed: March 26, 2004
For: METHOD FOR ADJUSTING CHROMATIC IMAGE OF A DISPLAY APPATATUS

DECISION ON REQUEST TO WITHDRAW FROM RECORD

This is a decision on the request for withdrawal as attorney/agent and change of correspondence address filed on May 18, 2004

A grantable request to withdraw as attorney/agent of record must:
(1) indicate the present mailing address of the attorney(s)/agent(s) who seek(s) to withdraw, and
(2) be signed by each attorney/agent seeking to withdraw or clearly be signed on their behalf, and
(3) be *approved* at least thirty (30) days prior to the maximum extendable period for response to any outstanding Office Action, and
(4) indicate the address to which future correspondence should be mailed.

Petitioner has satisfied the requirements for successfully requesting withdrawal. Accordingly, the request is **GRANTED.**

Mord Michael Lewis have been withdrawn.

All future communications from the Office will continue to be directed to the address listed above until otherwise notified by applicant. Applicant is reminded of the obligation to promptly notify the Patent and Trademark Office of any change in correspondence address to ensure receipt of all communications from the Office.

Kenneth A. Wieder
Special Program Examiner
Technology Center 2600
Communications
(571) 272-2986

UNITED STATES PATENT AND TRADEMARK OFFICE

Commissioner for Patents
United States Patent and Trademark Office
P.O. Box 1450
Alexandria, VA 22313-1450
www.uspto.gov

MOORE & VAN ALLEN PLLC
P.O. BOX 13706
Research Triangle Park, NC 27709

COPY MAILED

MAR 1 1 2005

OFFICE OF PETITIONS

In re Application of
Tokarz et al.
Application No. 10/708,807
Filed: March 26, 2004
Attorney Docket No. 018300-001349
For: Thermomechanical Processing Routes in Compact Strip Production of High-Strength Low-Alloy Steel

DECISION ACCORDING STATUS UNDER 37 CFR 1.47(a)

This is a decision on the petition under 37 CFR 1.47(a), filed August 20, 2004.

The petition is **granted**.

The above-identified application and papers have been reviewed and found in compliance with 37 CFR 1.47(a). This application is hereby accorded Rule 1.47(a) status.

The petition and declaration were accompanied by a check for $130. The $130 was applied to the fee due when an oath or declaration is submitted after the filing date. The fee of $110 was charged to petitioner's deposit account for a one month extension of time. The Office will charge $130 to petitioner's deposit account for the fee for the instant petition.

As provided in Rule 1.47(c), this Office will forward notice of this application's filing to the non-signing inventor at the address given in the petition. Notice of the filing of this application will also be published in the Official Gazette.

The Office of Initial Patent Examination will be informed of the instant decision.

Telephone inquiries concerning this decision should be directed to Petitions Attorney Steven Brantley at (571) 272-3203.

Charles Steven Brantley
Petitions Attorney
Office of Petitions

UNITED STATES PATENT AND TRADEMARK OFFICE

Commissioner for Patents
United States Patent and Trademark Office
P.O. Box 1450
Alexandria, VA 22313-1450
www.uspto.gov

MAILED

DEC 23 2006

Group 3700

Simmons, Perrine, Albright & Ellwood, P.L.C.
Third Floor Tower Place
22 South Linn Street
Iowa City, IA 52240

In re application of
John Mitchell

Serial Number: 10/708808
Filed: March 26, 2004

NOTICE OF WITHDRAWAL FROM ISSUE UNDER 37 CFR. 1.313

For: **SYSTEM AND METHOD FOR CORRECTING CLUB FOOT PROBLEMS IN CHILDREN**

The above-identified application is withdrawn from issue after payment of the issue fee to permit reopening of prosecution. The examiner will communicate an office action to you.

The issue fee is refundable upon written request. If, however, the application is again found allowable, the issue fee can be applied toward payment of the issue fee in the amount identified on the new Notice of Allowance and Issue Fee Due upon written request. This request and any balance due must be received on or before the due date noted in the new Notice of Allowance in order to prevent abandonment of the applicant.

Telephone inquiries should be directed to Justine Yu at (571) 272-4835.

The above-identified application is being forwarded to the examiner for prompt appropriate action, including notifying applicant of the new status of this application.

Karen M. Young
Technology Center 3700
571-272-3750

rt/ 2/16/06

UNITED STATES PATENT AND TRADEMARK OFFICE

COMMISSIONER FOR PATENTS
UNITED STATES PATENT AND TRADEMARK OFFICE
P.O. BOX 1450
ALEXANDRIA, VA 22313-1450
www.uspto.gov

HOWREY, SIMON,
ARNOLD & WHITE, LLP
1299 PENNSYLVANIA AVENUE, NW
BOX 34
WASHINGTON, DE 20004-2402

COPY MAILED

FEB 10 2005

OFFICE OF PETITIONS

In re Application of : DECISION ON PETITION
Gregg Wozniak :
Application No. 10/708,818 :
Filed: March 26, 2004 :
Title of Invention: METHOD :
AND ARRANGEMENT FOR AIRCRAFT :
FUEL DISPERSION :

This is a decision on the Petition to Revive the Application based upon unintentional abandonment, filed December 29, 2004.

This Petition is hereby **granted**.

The above-identified application became abandoned for failure to reply in a timely manner to the Notice to File Missing Parts of Provisional Application (hereinafter "Notice"), mailed May 14, 2004. The Notice required the basic filing fee and an executed oath or declaration and a late filing fee oath or declaration surcharge. The Notice set a two (2) month period for reply from the mail date of the Notice, and also provided for extensions of time under 37 CFR 1.136(a). No reply having been received, the application became abandoned July 15, 2004. The mailing of this Decision precedes the mailing of a Notice of Abandonment.

Applicant files the instant petition, executed oath/declaration and the appropriate fees.

It is noted that the power of attorney and correspondence address appearing on the declaration filed with the instant petition differs from the correspondence address and law firm appearing in the petition. Applicant must correct/clarify the attorney of record and correspondence address in this file. A courtesy copy of this Decision is being forwarded to Petitioner at the address appearing on the petition; however, all future correspondence will be sent to address of record as identified in the executed declaration until instructions to the contrary are received.

The application file is being referred to the Office of Initial Patent Examination for continued processing in due course.

Telephone inquiries concerning this matter should be directed to the undersigned at (571) 272-3232.

Derek L. Woods
Attorney/Advisor
Office of Petitions

Cc: TRACY W. DRUCE, ESQ.
NOVAK DRUCE & QUIGG LLP
1615 L STREET NW
SUITE 850
WASHINGTON, DC 20036

SPE RESPONSE FOR CERTIFICATE OF CORRECTION

Paper No.: _____

DATE : 4-25-08

TO SPE OF : ART UNIT 2876

SUBJECT : Request for Certificate of Correction for Appl. No.: 10/708833 Patent No. 7059531

Please respond to this request for a certificate of correction within 7 days.

Please review the requested changes/corrections as shown in the **COCIN** document(s) in the IFW application image. No new matter should be introduced, nor should the scope or meaning of the claims be changed.

Should COC be approved

Please complete the response (see below) and forward the completed response to scanning using document code **COCX**.

Certificates of Correction Branch

703-308-9390 ext. 117

Thank You For Your Assistance

The request for issuing the above-identified correction(s) is hereby:

Note your decision on the appropriate box.

- ☒ **Approved** — All changes apply.
- ☐ **Approved in Part** — Specify below which changes do not apply.
- ☐ **Denied** — State the reasons for denial below.

Comments: The Request for Certificate of Correction filed January 25, 2008 has been reviewed and approved.

/Steven S. Paik/

SPE

2887

Art Unit

SPE RESPONSE FOR CERTIFICATE OF CORRECTION

Paper No.: _____

DATE : 08/14/09

TO SPE OF : ART UNIT 2612

SUBJECT : Request for Certificate of Correction for Appl. No.: 10708841
Patent No.: 7154375

Please respond to this request for a certificate of correction within 7 days.

FOR IFW FILES:

Please review the requested changes/corrections as shown in the **COCIN** document(s) in the IFW application image. No new matter should be introduced, nor should the scope or meaning of the claims be changed.

Please complete the response (see below) and forward the completed response to scanning using document code **COCX**.

FOR PAPER FILES:

Please review the requested changes/corrections as shown in the attached certificate of correction. Please complete this form (see below) and forward it with the file to:

Certificates of Correction Branch (CofC)

Randolph Square
Palm Location 7580

Should the changes be made **Valerie Jackson** **Certificates of Correction Branch**

703-756-1573

Thank You For Your Assistance

The request for issuing the above-identified correction(s) is hereby:
Note your decision on the appropriate box.

☒ **Approved**	**All** changes apply.
☐ **Approved in Part**	Specify below which changes **do not** apply.
☐ **Denied**	State the reasons for denial below.

Comments:

Approved the cross references.

/Nam V. Nguyen/

8/14/09

SPE RESPONSE FOR CERTIFICATE OF CORRECTION

SPE Art Unit

SPE RESPONSE FOR CERTIFICATE OF CORRECTION

Paper No.:20090814

DATE :

TO SPE OF : ART UNIT

SUBJECT : Request for Certificate of Correction on Patent No.:

A response is requested with respect to the accompanying request for a certificate of correction.

Please complete this form and return with file, within **7** days to:
Certificates of Correction Branch - ST (South Tower) 9A22
Palm location **7590** - Tel. No. (703) 305-8309

With respect to the change(s) requested, correcting Office and/or Applicant's errors, should the patent read as shown in the certificate of correction? No new matter should be introduced, nor should the scope or meaning of the claims be changed.

Thank You For Your Assistance **Certificates of Correction Branch**

The request for issuing the above-identified correction(s) is hereby:

Note your decision on the appropriated box.

☒ **Approved** All changes apply.

☐ **Approved in Part** Specify below which changes **do not** apply.

☐ **Denied** State the reasons for denial below.

Comments:

/BRIAN A ZIMMERMAN/
Supervisory Patent Examiner.Art Unit 2612

PTO/SB/66 (03-09)
Approved for use through 03/31/2012. OMB 0651-0016
U.S. Patent and Trademark Office: U.S. DEPARTMENT OF COMMERCE
Under the Paperwork Reduction Act of 1995, no persons are required to respond to a collection of information unless it displays valid OMB control number.

PETITION TO ACCEPT UNINTENTIONALLY DELAYED PAYMENT OF MAINTENANCE FEE IN AN EXPIRED PATENT (37 CFR 1.378(c))

Patent Number	Issue Date (YYYY-MM-DD)	Application Number	Filing Date (YYYY-MM-DD)	Docket Number (if applicable)
6874674	2005-04-05	10708890	2004-03-30	000101-203

CAUTION: Maintenance fee (and surcharge, if any) payment must correctly identify: (1) the patent number and (2) the application number of the actual U.S. application leading to issuance of that patent to ensure the fee(s) is/are associated with the correct patent. 37 CFR 1.366(c) and (d).

SMALL ENTITY

☐ Patentee claims, or has previously claimed, small entity status. See 37 CFR 1.27.

LOSS OF ENTITLEMENT TO SMALL ENTITY STATUS

☐ Patentee is no longer entitled to small entity status. See 37 CFR 1.27(g)

NOT Small Entity

	Fee	Code
◉	3 ½ year	(1551)
○	7 ½ year	(1552)
○	11 ½ year	(1553)

Small Entity

	Fee	Code
○	3 ½ year	(2551)
○	7 ½ year	(2552)
○	11 ½ year	(2553)

SURCHARGE

The surcharge required by 37 CFR 1.20(i)(2) (Fee Code 1558) must be paid as a condition of accepting unintentionally delayed payment of the maintenance fee.

MAINTENANCE FEE (37 CFR 1.20(e)-(g))

The appropriate maintenance fee must be submitted with this petition.

STATEMENT

THE UNDERSIGNED CERTIFIES THAT THE DELAY IN PAYMENT OF THE MAINTENANCE FEE TO THIS PATENT WAS UNINTENTIONAL

PETITIONER(S) REQUEST THAT THE DELAYED PAYMENT OF THE MAINTENANCE FEE BE ACCEPTED AND THE PATENT REINSTATED

THIS PORTION MUST BE COMPLETED BY THE SIGNATORY OR SIGNATORIES

37 CFR 1.378(d) states: "Any petition under this section must be signed by an attorney or agent registered to practice before the Patent and Trademark Office, or by the patentee, the assignee, or other party in interest."

I certify, in accordance with 37 CFR 1.4(d)(4) that I am

◉ An attorney or agent registered to practice before the Patent and Trademark Office

○ A sole patentee

○ A joint patentee; I certify that I am authorized to sign this submission on behalf of all the other patentees.

○ A joint patentee; all of whom are signing this e-petition

○ The assignee of record of the entire interest

Patent Practitioner			
A signature of the applicant or representative is required in accordance with 37 CFR 1.33 and 10.18. Please see 37 CFR 1.4(d) for the form of the signature			
Signature	/T F Marsteller, Reg No 29672/	Date (YYYY-MM-DD)	2009-08-18
Name	Thomas F. Marsteller, Jr.	Registration Number	29672

This collection of information is required by 37 CFR 1.378(c). The information is required to obtain or retain a benefit by the public which is to file (and by the USPTO to process) an application. Confidentiality is governed by 35 U.S.C. 122 and 37 CFR 1.11 and 1.14. This collection is estimated to take 1 hour to complete, including gathering, preparing, and submitting the completed application form to the USPTO. Time will vary depending upon the individual case. Any comments on the amount of time you require to complete this form and/ or suggestions for reducing this burden, should be sent to the Chief Information Officer, U.S. Patent and Trademark Office, U.S. Department of Commerce, P.O. Box 1450, Alexandria, VA 22313-1450. DO NOT SEND FEES OR COMPLETED FORMS TO THIS ADDRESS. **This form can only be used when in conjunction with EFS-Web. If this form is mailed to the USPTO, it may cause delays in reinstating the patent.**

Privacy Act Statement

The Privacy Act of 1974 (P.L. 93-579) requires that you be given certain information in connection with your submission of the attached form related to a patent application or patent. Accordingly, pursuant to the requirements of the Act, please be advised that: (1) the general authority for the collection of this information is 35 U.S.C. 2(b)(2); (2) furnishing of the information solicited is voluntary; and (3) the principal purpose for which the information is used by the U.S. Patent and Trademark Office is to process and/or examine your submission related to a patent application or patent. If you do not furnish the requested information, the U.S. Patent and Trademark Office may not be able to process and/or examine your submission, which may result in termination of proceedings or abandonment of the application or expiration of the patent.

The information provided by you in this form will be subject to the following routine uses:

1. The information on this form will be treated confidentially to the extent allowed under the Freedom of Information Act (5 U.S.C. 552) and the Privacy Act (5 U.S.C. 552a). Records from this system of records may be disclosed to the Department of Justice to determine whether the Freedom of Information Act requires disclosure of these records.

2. A record from this system of records may be disclosed, as a routine use, in the course of presenting evidence to a court, magistrate, or administrative tribunal, including disclosures to opposing counsel in the course of settlement negotiations.

3. A record in this system of records may be disclosed, as a routine use, to a Member of Congress submitting a request involving an individual, to whom the record pertains, when the individual has requested assistance from the Member with respect to the subject matter of the record.

4. A record in this system of records may be disclosed, as a routine use, to a contractor of the Agency having need for the information in order to perform a contract. Recipients of information shall be required to comply with the requirements of the Privacy Act of 1974, as amended, pursuant to 5 U.S.C. 552a(m).

5. A record related to an International Application filed under the Patent Cooperation Treaty in this system of records may be disclosed, as a routine use, to the International Bureau of the World Intellectual Property Organization, pursuant to the Patent Cooperation Treaty.

6. A record in this system of records may be disclosed, as a routine use, to another federal agency for purposes of National Security review (35 U.S.C. 181) and for review pursuant to the Atomic Energy Act (42 U.S.C. 218(c)).

7. A record from this system of records may be disclosed, as a routine use, to the Administrator, General Services, or his/her designee, during an inspection of records conducted by GSA as part of that agency's responsibility to recommend improvements in records management practices and programs, under authority of 44 U.S.C. 2904 and 2906. Such disclosure shall be made in accordance with the GSA regulations governing inspection of records for this purpose, and any other relevant (i.e., GSA or Commerce) directive. Such disclosure shall not be used to make determinations about individuals.

8. A record from this system of records may be disclosed, as a routine use, to the public after either publication of the application pursuant to 35 U.S.C. 122(b) or issuance of a patent pursuant to 35 U.S.C. 151. Further, a record may be disclosed, subject to the limitations of 37 CFR 1.14, as a routine use, to the public if the record was filed in an application which became abandoned or in which the proceedings were terminated and which application is referenced by either a published application, an application open to public inspections or an issued patent.

9. A record from this system of records may be disclosed, as a routine use, to a Federal, State, or local law enforcement agency, if the USPTO becomes aware of a violation or potential violation of law or regulation.

UNITED STATES PATENT AND TRADEMARK OFFICE

Commissioner for Patents
United States Patent and Trademark Office
P.O. Box 1450
Alexandria, VA 22313-1450
www.uspto.gov

In re Patent No. 6874674
Issue Date: April 5,2005
Application No. 10708890
Filed: March 30,2004
Attorney Docket No. 000101-203

:
:DECISION GRANTING PETITION
:UNDER 37 CFR 1.378(c)
:

This is a decision on the electronic petition, filed August 18,2009 ,under 37 CFR 1.378(c) to accept the unintentionally delayed payment of the 3.5 year maintenance fee for the above-identified patent.

The petition is **GRANTED**.

The maintenance fee is accepted, and the above-identified patent reinstated as of August 18,2009 . This decision also constitutes notice that the fee has been accepted. An electronic copy of the petition and this decision has been created as an entry in the Image File Wrapper. Nevertheless, petitioner should print and retain an independent copy.

Telephone inquiries related to this electronic decision should be directed to the Electronic Business Center at 1-866-217-9197.

UNITED STATES PATENT AND TRADEMARK OFFICE

Commissioner for Patents
United States Patent and Trademark Office
P.O. Box 1450
Alexandria, VA 22313-1450
www.uspto.gov

HONEYWELL INTERNATIONAL INC.
101 COLUMBIA ROAD
P O BOX 2245
MORRISTOWN NJ 07962-2245

COPY MAILED

AUG 0 2 2005

OFFICE OF PETITIONS

In re Application of :
Chappidi, et al. :
Application No. 10/708,902 : ON PETITION
Filed: March 30, 2004 :
Attorney Docket No. H0006030/HON-010 :
For: IDENTIFYING THE LOCATION OF AN ASSET

This is a decision on the petition under 37 CFR 1.137(b), filed on July 14, 2005 to revive the above-identified application.

The above-identified application became abandoned for failure to reply in a timely manner to the November 2, 2004 non-final Office action which set an extendable three (3) month period for reply. No extensions of time having been obtained pursuant to 37 CFR 1.136(a) and no reply being received in the Office, this application became abandoned on February 3, 2005. A Notice of Abandonment was mailed on June 6, 2005.

Petitioner has submitted an amendment in reply to the November 2, 2004 non-final Office action, the petition fee, and an acceptable statement of the unintentional nature of the delay in responding to the November 2, 2004 non-final Office action.[1]

Regarding the statement of unintentional delay, it was not signed by a person who would have been in a position of knowing that the delay in filing a timely response was unintentional. In the event that petitioner has no knowledge that the delay was in fact unintentional, petitioner should make a reasonable inquiry to ascertain that, in fact, the delay was unintentional. If petitioner discovers that the delay was intentional, petitioner must so notify the Office. A courtesy copy of this decision is being mailed to the address listed on the petition. However, any future correspondence regarding this application will be mailed to the address of record.

The petition is **GRANTED**.

---

[1] The petition fee due is $1,500.00. Petitioner submitted only $1,370.00 by credit card. Pursuant to petitioner's authorization, deposit account no. 20-0674 was charged $130.00.

After the mailing of this decision the application will be forwarded to Technology Center 2876's technical support staff for processing the amendment filed on July 14, 2005.

Telephone inquiries pertaining to this decision may be directed to the undersigned at (571) 272-3230.

E. Shirene Willis
Senior Petitions Attorney
Office of Petitions

cc: NARENDRA R. THAPPETA
TRIATEK, INC.
2976 PACIFIC DRIVE
NORCROSS, GA 30071

UNITED STATES PATENT AND TRADEMARK OFFICE

Commissioner for Patents
United States Patent and Trademark Office
P.O. Box 1450
Alexandria, VA 22313-1450
www.uspto.gov

ALBIHNS STOCKHOLM AB
BOX 5581, Linnegatan 2
SE-114 85 Stockholm; SWEDENn
STOCKHOLM, SWEDEN

COPY MAILED
SEP 1 1 2006
OFFICE OF PETITIONS

In re Application of :
BJUHR, et al. :
Application No. 10/708,950 : DECISION ON PETITION
Filed: April 02, 2004 : TO WITHDRAW
Attorney Docket No. 48271-0001-00-US : FROM RECORD
:

This is a decision on the Request to Withdraw as attorney or agent of record under 37 C.F.R. § 1.36(b), filed June 29, 2006.

The request is **NOT APPROVED** as moot.

A review of the file record indicates that the power of attorney to ALBIHNS STOCKHOLM AB has been revoked by the assignee of the patent application on August 16, 2006. Accordingly, the request to withdraw under 37 C.F.R. § 1.36(b) is moot.

All future communications from the Office will continue to be directed to the below-listed address until otherwise notified by applicant.

Telephone inquires concerning this decision should be directed to PatriciaVolpe at (571) 272-6825.

David Bucci
Petitions Examiner
Office of Petitions

cc: DRINKER BIDDLE & REATH LLP
1500 K Street, N.W.
Suite 1100
Washington, DC 20005-1209

UNITED STATES PATENT AND TRADEMARK OFFICE

Commissioner for Patents
United States Patent and Trademark Office
P.O. Box 1450
Alexandria, VA 22313-1450
www.uspto.gov

ATZ & ATZ PC
28333 TELEGRAPH ROAD
SUITE 250
SOUTHFIED MI 48034

COPY MAILED

SEP 01 2006

OFFICE OF PETITIONS

In re Application of
Conner, et al. :
Application No. 10/708,990 : DECISION ON
Filed: April 6, 2004 : PETITION
Attorney Docket No. 81093975 :

This is in response to the petition to revive under 37 CFR 1.137(b), filed April 10, 2006.

The petition under 37 CFR 1.137(b) is **GRANTED**.

The above-identified application became abandoned for failure to pay the issue fee in response to the Notice of Allowance mailed October 7, 2005. No issue fee having been received, the application became abandoned on January 8, 2006. A Notice of Abandonment was mailed on March 28, 2006.

With the instant petition, petitioner paid the petition and issue fees, and made the proper statement of unintentional delay.

The application is being forwarded to the Office of Patent Publication for processing into a patent.

Telephone inquiries related to this decision should be directed to the undersigned at (571)272-3207.

Cliff Congo
Petitions Attorney
Office of Petitions

UNITED STATES PATENT AND TRADEMARK OFFICE

Commissioner for Patents
United States Patent and Trademark Office
P.O. Box 1450
Alexandria, VA 22313-1450
www.uspto.gov

BRUCE E. HARANG
P.O. BOX 872735
VANCOUVER, WA 98687-2735

COPY MAILED

AUG 25 2004

OFFICE OF PETITIONS

In re Application of :
Simon Sun et al :
Application No. 10/708,996 : DECISION GRANTING STATUS
Filed: April 6, 2004 : UNDER 37 CFR 1.47(A)
For: REAR FOLD DOWN CARGO WITH TILT DOWN CUSHION :

This is in response to the petition under 37 CFR 1.47(a), filed June 28, 2004.

The petition is granted.

Petitioner has shown that the non-signing inventor has refused to join in the filing of the above-identified application.

The above-identified application and papers have been reviewed and found in compliance with 37 CFR 1.47(a). This application is hereby accorded Rule 1.47(a) status. As provided in Rule 1.47(c), this Office will forward notice of this application's filing to the non-signing inventor at the address given in the petition. Notice of the filing of this application will also be published in the Official Gazette.

Telephone inquiries regarding this decision should be directed to Petitions Examiner Wan Laymon at (703) 306-5685.[1]

This matter is being referred to the Office of Initial Patent Examination for preexamination processing.

Frances Hicks
Lead Petitions Examiner
Office of Petitions
Office of the Deputy Commissioner
for Patent Examination Policy

[1] Effective September 27, the phone number will be 571-272-3220.

UNITED STATES PATENT AND TRADEMARK OFFICE

Commissioner for Patents
United States Patent and Trademark Office
P.O. Box 1450
Alexandria, VA 22313-1450
www.uspto.gov

ZORN KOJIC
1632 McINTYRE STREET
ANN ARBOR, MI 48105-2415

COPY MAILED

AUG 2 5 2004

OFFICE OF PETITIONS

In re Application of
Simon Sun and Zorn Kojic
Application No. 10/708,996
Filed: April 6, 2004
For: REAR FOLD DOWN CARGO SEAT WITH TILT DOWN CUSHION

Dear Mr. Kojic:

You are named as a joint inventor in the above identified United States patent application, filed under the provisions of 35 U.S.C. 116 (United States Code), and 37 CFR 1.47(a), Rules of Practice in Patent Cases. Should a patent be granted on the application you will be designated therein as a joint inventor.

As a named inventor you are entitled to inspect any paper in the file wrapper of the application, order copies of all or any part thereof (at a prepaid cost per 37 CFR 1.19) or make your position of record in the application. Alternatively, you may arrange to do any of the preceding through a registered patent attorney or agent presenting written authorization from you. If you care to join in the application, counsel of record (see below) would presumably assist you. Joining in the application would entail the filing of an appropriate oath or declaration by you pursuant to 37 CFR 1.63.

Telephone inquiries regarding this communication should be directed to Wan Laymon at (703) 306-5685. Requests for information regarding your application should be directed to the File Information Unit at (703) 308-2733. Information regarding how to pay for and order a copy of the application, or a specific paper in the application, should be directed to Certification Division at (703) 308-9726 or 1 (800) 972-6382 (outside the Washington D.C. area).

Frances Hicks
Lead Petitions Examiner
Office of Petitions
Office of the Deputy Commissioner
for Patent Examination Policy

cc:
BRUCE E. HARANG
PO BOX 872735
VANCOUVER, WA 98687-2735

UNITED STATES PATENT AND TRADEMARK OFFICE

Commissioner for Patents
United States Patent and Trademark Office
P.O. Box 1450
Alexandria, VA 22313-1450
www.uspto.gov

MAILED
FROM DIRECTORS OFFICE

OCT 13 2005

TECHNOLOGY CENTER 3600

Simpson & Simpson, PLLC
5555 Main Street
Williamsville, NY 14221-5406

In re Application of : PETITION TO WITHDRAW
Krzysztof Stanuszek : PREMATURE FINAL
Application No. 10/708,997 : REJECTION UNDER
Filed: April 6, 2004 : 37 CFR 1.181
For: IMPROVED SAUSAGE STUFFER

Applicant's petition,filed on September 21, 2005, requests withdrawal of the finality of the Office action mailed June 2, 2005 as being premature.

The petition is **GRANTED**.

Applicant alleges that the final rejection mailed on June 2, 2005 is premature because the Examiner had utilized newly cited prior art "the Eastman Outdoors Sausage Stuffer" to reject at least claims 11 and 18 under 35 USC 102(b). Applicant further alleges that instant claims 11 and 18 were not amended during prosecution of the present application prior to the June 2, 2005 Office action. Therefore the applicant concludes that the Examiner's final office action mailed June 2, 2005 finally rejecting claims 11 and 18 based upon applicant's amendment necessitating a new grounds of rejection was improper.

MPEP 706.07(a) [R-1] Final Rejection, When Proper on Second Action states in part:

"Due to the change in practice as affecting final rejections, older decisions on questions of prematureness of final rejection or admission of subsequent amendments do not necessarily reflect present practice.
Under present practice, second or any subsequent actions on the merits shall be final, except where the examiner introduces a new ground of rejection that is neither necessitated by applicant's amendment of the claims nor based on information submitted in an information disclosure statement filed during the period set forth in 37 CFR 1.97(c) with the fee set forth in 37 CFR 1.17(p). "

A review of the file history reveals that original claims 11 and 18 were not amended prior to the Office action mailed on June 2, 2005. Examiner's new grounds of rejection of claims 11 and 18 were not necessitated by applicant's amendment to the claims nor based on information submitted in an information disclosure statement filed during the period set forth in 37 CFR 1.97(c). Therefore the basis for the Examiner making that Office action final was improper since Examiner's application of the newly cited prior art "the Eastman Outdoors Sausage Stuffer" to reject original unamended claims 11 and 18 did not serve as a proper basis under MPEP 706.07(a) to make the second office action final.

The finality of the Office action mailed on June 2, 2005 is hereby withdrawn and the amendment after final received on August 4, 2005 will be entered accordingly. The Examiner's advisory action mailed on August 17, 2005 is hereby **VACATED**. This application is being returned to the Examiner for consideration of the amendment filed on August 4, 2005.

Donald T. Hajec
Director, TC 3600
(571) 272-5150

pmp/snm: 9/27/05

UNITED STATES PATENT AND TRADEMARK OFFICE

Commissioner for Patents
United States Patent and Trademark Office
P.O. Box 1450
Alexandria, VA 22313-1450
www.uspto.gov

PERKINS COIE LLP
PATENT-SEA
P.O. BOX 1247
SEATTLE WA 98111-1247

MAILED

SEP 28 2009

OFFICE OF PETITIONS

In re Patent No. 7,529,331
Issued: May 5, 2009
Application No. 10/709,004
Filed: April 7, 2004
Attorney Docket No. 320528626US2

: DECISION ON APPLICATION
: FOR PATENT TERM ADJUSTMENT

This is a decision on the "APPLICATION FOR PATENT TERM ADJUSTMENT RECONSIDERATION UNDER 37 C.F.R. § 1.705(D)" filed July 6, 2009, requesting that the patent term adjustment determination for the above-identified patent be changed from six hundred seventeen (617) days to one thousand two hundred eighty-six (1286) days.

The request for reconsideration of patent term adjustment is **DISMISSED**.

On May 5, 2009, the above-identified application matured into US Patent No. 7,529,331 with a patent term adjustment of 617 days. This request for reconsideration of patent term adjustment was timely filed within two months of the issue date of the patent. See 37 CFR 1.705(d).

The Office acknowledges submission of the $200.00 fee set forth in 37 CFR 1.18(e). No additional fees are required.

Patentees request recalculation of the patent term adjustment based on the decision in Wyeth v. Dudas, 580 F. Supp. 2d 138, 88 U.S.P.Q. 2d 1538 (D.D.C. 2008). Patentees assert that in view of the decision in Wyeth, they are entitled to a total patent term adjustment of 1286 days, which includes 759 days due to exceeding three year pendency.

The 759-day period is calculated based on the application having been filed under 35 U.S.C. 111(a) on April 7, 2004 and the patent having been issued on May 5, 2009, three years and 759 days later. Patentees assert that in addition to this 759 day period, they are entitled to a period of adjustment due to examination delay pursuant to 37 CFR 1.702(a), of 715 days.

Under 37 CFR 1.703(f), patentees are entitled to a period of patent term adjustment equal to the period of delays based on the grounds set forth in 37 CFR 1.702 reduced by the period of time equal to the period of time during which patentees failed to engage in reasonable efforts to conclude prosecution pursuant to 37 CFR 1.704. In other words, it is the period of Office delay reduced by the period of applicant delay. Patentees do not dispute the period of reduction of 142 days for applicant delay.

Patentees agree that the total period of Office delay is the sum of the period of Three Years Delay to the issuance of the Patent (759 days) and the period of Examination Delay (715 days) to the extent that these periods of delay are not overlapping. Patentees contend that 46 days of the period of delay of 715 days for the Office's failure to mail at least one of a notification under 35 U.S.C. 132 overlaps with the Three Year Delay period.

Accordingly, patentees submit that the total period of Office Delay is 1428 days, which is the sum of the period of Three Year Delay (759 days) and the period of Examination Delay (715 days), reduced by the period of overlap (46 days). As such, patentees assert entitlement to a patent term adjustment of 1286 days (759 + 715 reduced by 46 overlap -142 for applicant delay).

Thus, as of the issuance of the patent on May 5, 2009, the application was pending three years and 759 days after its filing date. The Office agrees that the action detailed above was not taken within the specified time frame, and thus, a period of adjustment of 715 days was entered. At issue is whether patentees should accrue 759 days of patent term adjustment for the Office taking in excess of three years to issue the patent, as well as 715 days (already adjusted for overlap) for Office failure to take a certain action within a specified time frame (or examination delay).

The Office contends that 759 days overlap. Patentees' calculation of the period of overlap is inconsistent with the Office's interpretation of this provision. 35 U.S.C. 154(b)(2)(A) limits the adjustment of patent term, as follows:

> to the extent that the periods of delay attributable to grounds specified in paragraph (1) overlap, the period of any adjustment granted under this subsection shall not exceed the actual number of days the issuance of the patent was delayed.

Likewise, 35 CFR 1.703(f) provides that:

> To the extent that periods of delay attributable to the grounds specified in § 1.702 overlap, the period of adjustment granted under this section shall not exceed the actual number of days the issuance of the patent was delayed.

As explained in *Explanation of 37 CFR 1.703(f) and of the United States Patent and Trademark Office Interpretation of 35 U.S.C. 154(b)(2)(A)*, 69 Fed. Reg. 34283 (June 21, 2004), the Office interprets 35 U.S.C. 154(b)(2)(A) as permitting either patent term adjustment under 35 U.S.C. 154(b)(1)(A)(i)-(iv), or patent term adjustment under 35 U.S.C. 154(b)(1)(B), but not as permitting patent term adjustment under both 35 U.S.C. 154(b)(1)(A)(i)-(iv) and 154(b)(1)(B). Accordingly, the Office implements the overlap provision as follows:

> If an application is entitled to an adjustment under 35 U.S.C. 154(b)(1)(B), the entire period during which the application was pending (except for periods excluded under 35 U.S.C. 154(b)(1)(B)(i)-(iii)), and not just the period beginning three years after the actual filing date of the application, is the period of delay under 35 U.S.C. 154(b)(1)(B) in determining whether periods of delay overlap under 35 U.S.C. 154(b)(2)(A). Thus, any days of delay for Office issuance of the patent more than 3 years after the filing date of the application, which overlap with the days of patent term adjustment accorded prior to the issuance of the patent will not result in any additional patent term adjustment. See 35 U.S.C. 154(b)(1)(B), 35 U.S.C. 154(b)(2)(A), and 37 CFR § 1.703(f). See *Changes to Implement Patent Term Adjustment Under Twenty Year Term; Final Rule*, 65 Fed. Reg. 56366 (Sept. 18, 2000). See also *Revision of Patent Term Extension and Patent Term Adjustment Provisions; Final Rule*, 69 Fed. Reg. 21704 (April 22, 2004), 1282 Off. Gaz. Pat. Office 100 (May 18, 2004). See also *Explanation of 37 CFR 1.703(f) and of the United States Patent and Trademark Office Interpretation of 35 U.S.C. 154(b)(2)(A),* 69 Fed. Reg. 34283 (June 21, 2004).

The current wording of § 1.703(f) was revised in response to the misinterpretation of this provision by a number of Patentees. The rule was slightly revised to more closely track the corresponding language of 35 U.S.C. 154(b)(2)(A). The relevant portion differs only to the extent that the statute refers back to provisions of the statute whereas the rule refers back to sections of the rule. This was not a substantive change to the rule nor did it reflect a change of the Office's interpretation of 35 U.S.C. 154(b)(2)(A). As stated in the *Explanation of 37 CFR 1.703(f) and of the United States Patent and Trademark Office Interpretation of 35 U.S.C. 154(b)(2)(A)*, the Office has consistently taken the position that if an application is entitled to an adjustment under the three-year pendency provision of 35 U.S.C. 154(b)(1)(B), the entire period during which the application was pending before the Office (except for periods excluded under 35 U.S.C. 154(b)(1)(B)(i)-(iii)), and not just the period beginning three years after the actual filing date of the application, is the relevant period under 35 U.S.C. 154(b)(1)(B) in determining whether periods of delay "overlap" under 35 U.S.C. 154(b)(2)(A).

This interpretation is consistent with the statute. Taken together the statute and rule provide that to the extent that periods of delay attributable to grounds specified in 35 U.S.C. 154(b)(1) and in corresponding § 1.702 overlap, the period of adjustment

granted shall not exceed the actual number of days the issuance of the patent was delayed. The grounds specified in these sections cover the A) guarantee of prompt Patent and Trademark Office responses, B) guarantee of no more than 3-year application pendency, and C) guarantee or adjustments for delays due to interference, secrecy orders and appeals. A section by section analysis of 35 U.S.C. 154(b)(2)(A) specifically provides that:

> Section 4402 imposes limitations on restoration of term. In general, pursuant to [35 U.S.C.] 154(b)(2)(A)-(C), total adjustments granted for restorations under [35 U.S.C. 154](b)(1) are reduced as follows: (1) To the extent that there are multiple grounds for extending the term of a patent that may exist simultaneously (e.g., delay due to a secrecy order under [35 U.S.C.] 181 and administrative delay under [35 U.S.C.] 154(b)(1)(A)), the term should not be extended for each ground of delay but only for the actual number of days that the issuance of a patent was delayed; See 145 Cong. Rec. S14,718[1]

As such, the period for over three-year pendency does not overlap only to the extent that the actual dates in the period beginning three years after the date on which the application was filed overlap with the actual dates in the periods for failure of the Office to take action within specified time frames. In other words, consideration of the overlap does not begin three years after the filing date of the application.

In this instance, the relevant period under 35 U.S.C. 154(b)(1)(B) in determining whether periods of delay "overlap" under 35 U.S.C. 154(b)(2)(A) is the entire period during which the application was pending before the Office, April 7, 2004, to the date the patent issued on May 5, 2009. (There were no periods excluded under 35 U.S.C. 154(b)(1)(B)(i)-(iii)). Prior to the issuance of the patent, 715 days of patent term adjustment were accorded for the Office failing to respond within a specified time frame during the pendency of the application. All of the 759 days for Office delay in issuing the patent overlap with the 715 days of examination delay. During that time, the issuance of the patent was delayed by 759 days, not 715 + 759 days. The Office experienced 715 days of examination delay. Otherwise, the Office took all actions set forth in 37 CFR 1.702(a) within the prescribed time frames. Nonetheless, given the 759 days of Office delay and the time allowed within the time frames for processing and examination, as of the date the patent issued, the application was pending three years and 759 days. The Office did not delay 759 days and then an additional 715 days. The period of delay of 759 days attributable to the delay in the issuance of the patent

---

[1] The AIPA is title IV of the Intellectual Property and Communications Omnibus Reform Act of 1999 (S. 1948), which was incorporated and enacted as law as part of Pub. L. 106-113. The Conference Report for H.R. 3194, 106th Cong. 1st Sess. (1999), which resulted in Pub. L. 106-113, does not contain any discussion (other than the incorporated language) of S. 1948. A section-by-section analysis of S. 1948, however, was printed in the Congressional Record at the request of Senator Lott, See 145 Cong. Rec. S14,708-26 (1999)(daily ed. Nov. 17, 1999).

overlaps with the adjustment of 715 days attributable to grounds specified in § 1.702(a)(1). Entry of both periods is not warranted.

Accordingly, at issuance, the Office properly entered 44 additional days of patent term adjustment for the Office taking in excess of three years to issue the patent for a total Office delay of 759 days.

In view thereof, no adjustment to the patent term will be made.

Telephone inquiries specific to this decision should be directed to Senior Petitions Attorney Patricia Faison-Ball at (571) 272-3212.

Christina Tartera Donnell for

Kery A. Fries
Senior Legal Advisor
Office of Patent Legal Administration
Office of Deputy Commissioner
for Examination Policy

UNITED STATES PATENT AND TRADEMARK OFFICE

Commissioner for Patents
United States Patent and Trademark Office
P.O. Box 1450
Alexandria, VA 22313-1450
www.uspto.gov

Paper No. 080504

NAIPO (NORTH AMERICA INTERNATIONAL PATENT OFFICE)
P.O. Box 506
Merrifield, VA 22116

AUG 16 2004

In re Application of:	:	
TE-HWEI SUEN et al.	:	
Serial No.: 10/709,027	:	DECISION ON REQUEST TO WITHDRAW
Filed: February 08, 2004	:	FROM RECORD
Attorney Docket No.: **ADTP0045USA0**	:	

This is a decision on the request to withdraw as attorney of record under 37 C.F.R. § 1.36, filed May 18, 2004.

The request is **DISMISSED.**

The attorney/agent requesting withdrawal is not of record in the above-identified application. As such, the request must be dismissed.

Winston Hsu remains as attorney of record at this time.

All future communications from the Office will continue to be directed to the above address until otherwise notified by applicant.

Inquiries related to this decision should be directed to Lissi Marquis at (571) 272-1596.

Lissi Marquis, Special Programs Examiner
Technology Center 2800
Semiconductors, Electrical and Optical
Systems and Components

UNITED STATES PATENT AND TRADEMARK OFFICE

COMMISSIONER FOR PATENTS
UNITED STATES PATENT AND TRADEMARK OFFICE
P.O. BOX 1450
ALEXANDRIA, VA 22313-1450
www.uspto.gov

Robert M. ASHER
BROMBERG & SUNSTEIN LLP
125 Summer street
Boston, MA 02110-1618

MAILED

DEC 16 2005

TECHNOLOGY CENTER 2100

In re Application of:
J. Ian PERCIVAL
Appl. No.: 10/709,040
Filed: April 8, 2004
For: A METHOD AND SYSTEM FOR COHERENTLY CACHING I/O DEVICES ACROSS A NETWORK

DECISION ON PETITION UNDER 37 CFR § 1.59

This is a decision on the petition under 37 CFR § 1.59(b), filed December 13, 2005 (original petition submitted on August 18, 2005 was not scanned in Image File Wrapper) to expunge the Information Disclosure Statement (IDS) submitted on August 18, 2005.

The petition is **GRANTED**.

Petitioner requests that the IDS submitted on August 18, 2005 be expunged from the record. Petitioner states that the IDS submitted on August 18, 2005 is subject to a protective order and the information has not been otherwise made public. The petition fee set forth in 37 CFR § 1.17(g) has been paid.

Applicant is required to retain the expunged material(s) for the life of any patent, which issues on the above-identified application.

The expunged material is returned herewith.

Any inquiry concerning this decision should be directed to the undersigned whose telephone number is (571) 272-3613.

Vincent N. Trans
Special Program Examiner
Technology Center 2100
Computer Architecture, Software, and
Information Security

UNITED STATES PATENT AND TRADEMARK OFFICE

Commissioner for Patents
United States Patent and Trademark Office
P.O. Box 1450
Alexandria, VA 22313-1450
www.uspto.gov

WHITE & CASE LLP
PATENT DEPARTMENT
1155 AVENUE OF THE AMERICAS
NEW YORK NY 10036

COPY MAILED

APR 0 7 2009

OFFICE OF PETITIONS

In re Application of :
Ronald H. Segall :
Application No. 10/709,046 : DECISION ON PETITION
Filed: April 8, 2004 : TO WITHDRAW
Attorney Docket No. 1129477-0002 : FROM RECORD
:

This is a decision on the Request to Withdraw as attorney or agent of record under 37 C.F.R. § 1.36(b), filed March 12, 2009.

The request is **APPROVED**.

A grantable request to withdraw as attorney/agent of record must be signed by every attorney/agent seeking to withdraw or contain a clear indication that one attorney is signing on behalf of another/others.

The request was signed by John M. Genova on behalf of all attorneys of record who are associated with customer No. 07470. All attorneys/agents associated with the Customer Number 07470 have been withdrawn. Applicant is reminded that there is no attorney of record at this time.

The request to change the correspondence of record is not acceptable as the requested correspondence address is not that of: (1) the first named signing inventor; or (2) an intervening assignee of the entire interest under 37 C.F.R 3.71. All future communications from the Office will be directed to the first named signing inventor at the first copied address below until otherwise properly notified by the applicant.

There is an outstanding Office action mailed January 7, 2009 that requires a reply from the applicant.

Telephone inquiries concerning this decision should be directed to undersigned at 571-272-1642. All other inquiries concerning the examination or status of this application should be directed to the Technology Center.

/AMW/
April M. Wise
Petitions Examiner
Office of Petitions

cc: RONALD H. SEGALL
107 ESSEX COURT
MORRISVILLE, NC 28117

cc: RONALD H. SEGALL
HALLMARK SURFACE TECHNOLOGIES
159 ROCKHILL ROAD
FAYETTEVILLE, NC 28312-8276

UNITED STATES PATENT AND TRADEMARK OFFICE

UNITED STATES DEPARTMENT OF COMMERCE
United States Patent and Trademark Office
Address: COMMISSIONER FOR PATENTS
P.O. Box 1450
Alexandria, Virginia 22313-1450
www.uspto.gov

APPLICATION NUMBER	FILING OR 371(C) DATE	FIRST NAMED APPLICANT	ATTY. DOCKET NO./TITLE
10/709,046	04/08/2004	Ronald H. Segall	1129477-0002

CONFIRMATION NO. 3045

POWER OF ATTORNEY NOTICE

7470
WHITE & CASE LLP
PATENT DEPARTMENT
1155 AVENUE OF THE AMERICAS
NEW YORK, NY 10036

Date Mailed: 04/06/2009

NOTICE REGARDING CHANGE OF POWER OF ATTORNEY

This is in response to the Power of Attorney filed 03/12/2009.

- The withdrawal as attorney in this application has been accepted. Future correspondence will be mailed to the new address of record. 37 CFR 1.33.

/amwise/

Office of Data Management, Application Assistance Unit (571) 272-4000, or (571) 272-4200, or 1-888-786-0101

UNITED STATES PATENT AND TRADEMARK OFFICE

Commissioner for Patents
United States Patent and Trademark Office
P.O. Box 1450
Alexandria, VA 22313-1450
www.uspto.gov

Paper No.

FREDERICK W. GIBB, III
MCGINN & GIBB, PLLC
2568-A RIVA ROAD
SUITE 304
ANNAPOLIS, MD 21401

COPY MAILED

JAN 1 0 2005

OFFICE OF PETITIONS

In re Application of :
Deshpande et al. :
Application No. 10/709,048 : DECISION ON PETITION
Filed: April 8, 2004 :
Attorney Docket No. FIS920030397US1:

This is a decision on the "PETITION UNDER 37 C.F.R. 1.17(h) ...," filed September 20, 2004, requesting that the above-identified application be accorded a filing date of April 8, 2004, an executed declaration and technical abstract be considered present in the application on filing, and the petition fee be refunded.

Application papers in the above-identified application were electronically filed on April 8, 2004. However, on August 12, 2004, the Office of Initial Patent Examination mailed a "Notice of Incomplete Nonprovisional Application," notifying applicants that the application papers had not been accorded a filing date because the application was deposited without drawings as required by 35 U.S.C. 113. The Notice further stated that the application was missing the oath or declaration, and an abstract of the technical disclosure was required.

In reply, applicants timely filed the instant petition. Applicants assert that the alleged omitted items were, in fact, filed in the USPTO with the remaining papers of the original application on April 8, 2004. To show that the drawings, declaration and abstract were among the papers filed on April 8, 2004, applicants submit *inter alia* a copy of the Acknowledgement Receipt from the USPTO dated April 8, 2004. The petition includes a duplicate copy of the application as petitioner maintains it was filed electronically with the USPTO on April 8, 2004.

Consideration of petitioner's evidence is unnecessary. On review of Office records, the missing documents were found to be present in the Electronic Filing System (EFS) filing. The application as-filed electronically included drawings, and thus, is entitled to a filing date of April 8, 2004. Moreover, both a declaration and an abstract were received on filing.

In view thereof, the petition is **GRANTED**.

The Notice of Incomplete Nonprovisional Application mailed August 12, 2004 was mailed in error and is hereby **vacated**.

As the declaration was submitted on filing, no late surcharge under § 1.16(e) is required.

Given the basis for granting the petition, the petition fee is being refunded to Deposit Account No. 09-0458, as authorized.

The Office of Initial Patent Examination (OIPE) has been advised of this decision. The application is, thereby, forwarded to OIPE for:

- correction of the filing date to April 8, 2004, using the application papers received in the Office on that date, including the allegedly omitted items found to be present in the original EFS filing of the application (5 sheets of drawings (figs 1-9), 1 page of abstract, and an executed declaration);
- and completion of pre-examination processing, including notation in Office records, as appropriate, that an executed declaration was received in the Office on filing of this application.

Telephone inquiries related to this decision should be directed to the undersigned at 571-272-3219.

Nancy Johnson
Senior Petitions Attorney
Office of Petitions

UNITED STATES PATENT AND TRADEMARK OFFICE

Commissioner for Patents
United States Patent and Trademark Office
P.O. Box 1450
Alexandria, VA 22313-1450
www.uspto.gov

NOVAK DRUCE & QUIGG LLP
1300 EYE STREET NW
400 EAST TOWER
WASHINGTON, DC 20005

COPY MAILED

OCT 0 4 2006

OFFICE OF PETITIONS

In re Application of :
Anders Larsson et al :
Application No. 10/709,063 : DECISION GRANTING PETITION
Filed: April 9, 2004 : UNDER 37 CFR 1.137(b)
Attorney Docket No. :
07589.0162.PCUS00

This is a decision on the petition under 37 CFR 1.137(b), filed January 5, 2006, to revive the above-identified application.

The petition is **GRANTED**.

The above-identified application became abandoned for failure to reply in a timely manner to the non-final Office action mailed January 4, 2005, which set a shortened statutory period for reply of three (3) months. No extensions of time under the provisions of 37 CFR 1.136(a) were obtained. Accordingly, the above-identified application became abandoned on April 5, 2005. A Notice of Abandonment was mailed on August 11, 2005.

The petition satisfies the conditions for revival pursuant to the provisions of 37 CFR 1.137(b) in that (1) the reply (an amendment), (2) the $1,500 petition fee, and (3) the required statement of unintentional delay have been received. Accordingly, the reply to the non-final Office action of January 4, 2005 is accepted as having been unintentionally delayed.

Telephone inquiries concerning this decision should be directed to the undersigned at (571) 272-3218.

This matter is being referred to Technology Center AU 37476 for appropriate action in the normal course of business on the reply received January 5, 2006.

Frances Hicks
Petitions Examiner
Office of Petitions

UNITED STATES PATENT AND TRADEMARK OFFICE

Commissioner for Patents
United States Patent and Trademark Office
P.O. Box 1450
Alexandria, VA 22313-1450
www.uspto.gov

MAILED

OCT 06 2004

Director's Office
Group 3700

Richard S. Norek
8 Garrison Drive
Eliot, ME 03903

In re application of
Richard S. Norck

Serial Number: 10/709065
Filed: April 9, 2004

DECISION ON PETITION TO MAKE SPECIAL UNDER 37 CFR. 1.102(c)

For: **FORMING GAS TURBINE TRANSITION DUCT BODIES WITHOUT LONGITUDINAL WELDS**

This is a decision on the petition filed on June 01, 2004, under 37 CFR. 1.102(c) to make special the above identified application because of the age/health of the applicant. Since the requirements of the M.P.E.P Section 708.02 IV have been met, the petition will be GRANTED.

The examiner is directed (1) to make an interference search for possible interfering applications, (2) to promptly examine this application out of turn, and (3) if any interfering application is discovered, to examine such application simultaneously and state in the first official letter of such application that it is being taken out of turn because of a possible interference.

Petitioner is advised that this application will continue to be special, throughout its entire prosecution and pendency, including interference or appeal, if any, only is Petitioner makes a prompt bona-fide effort, in response to each Office action, to place the application in condition for allowance, even if it is necessary to conduct an interview with the Examiner to accomplish this purpose.

Summary: Decision on Petition **GRANTED**.

/Richard A. Bertsch/

Richard A. Bertsch
Director
Technology Center 3700
(703) 308-0975

rt: 10/04/04

UNITED STATES PATENT AND TRADEMARK OFFICE

Commissioner for Patents
United States Patent and Trademark Office
P.O. Box 1450
Alexandria, VA 22313-1450
www.uspto.gov

MARK V. LOEN
43649 W BAILEY DR.
MARICOPA, AZ 85239

COPY MAILED

JUL 27 2006

OFFICE OF PETITIONS

In re Application of :
Cestro :
Application No. 10/709,066 : ON PETITION
Filed: April 9, 2004 :
Attorney Docket No. 116 :
For: DCS HI TEK TATE OF THE ART ALUMINUM 3 PEICE COLLAPSABLE BARELL SPRUNG POOL CUE WITH ADJUSTABLE IMPACT ROD AND TIP

This is a decision on the petition, filed May 31, 2006, under 37 CFR 1.137(b) to revive the above-identified application.

The above-identified application became abandoned for failure to timely submit a reply within three (3) months of the mailing of the March 7, 2005 non-final Office action. No response being received and no extensions of time being obtained, this application became abandoned on June 8, 2005. A Notice of Abandonment was mailed on October 19, 2005.

Applicant has submitted an amendment in reply to the March 7, 2005 non-final Office action, an acceptable statement of the unintentional nature of the delay in responding to the March 7, 2005 non-final Office action, and the petition fee.

The statement of unintentional delay was not signed by a person who would have been in a position of knowing that the delay in filing a timely response was unintentional. In the event that petitioner has no knowledge that the delay was in fact unintentional, petitioner should make a reasonable inquiry to ascertain that, in fact, the delay was unintentional. If petitioner discovers that the delay was intentional, petitioner must so notify the Office.

The petition is **GRANTED**.

The power of attorney and change of correspondence address filed on May 31, 2006 is accepted.

The address given on the petition differs from the new address of record – the one associated with customer number 47880. A change of address should be filed in this case in accordance with MPEP 601.03. A courtesy copy of this decision is being mailed to the address noted on the

petition. However, until otherwise instructed, all future correspondence regarding this application will be mailed solely to the address of record.

After the mailing of this decision the application will be forwarded to Technology Center AU 3711 for consideration of the amendment filed on May 31. 2006.

Telephone inquiries should be directed to the undersigned at (571) 272-3230.

Shirene Willis Brantley
Senior Petitions Attorney
Office of Petitions
Office of the Deputy Commissioner
for Patent Examination Policy

cc: MARK V. LOEN
2266 S. DOBSON RD.
STE. 224
MESA, AZ 85202

UNITED STATES PATENT AND TRADEMARK OFFICE

UNITED STATES DEPARTMENT OF COMMERCE
United States Patent and Trademark Office
Address: COMMISSIONER FOR PATENTS
P.O. Box 1450
Alexandria, Virginia 22313-1450
www.uspto.gov

NUTTER MCCLENNEN & FISH LLP
SEAPORT WEST
155 SEAPORT BOULEVARD
BOSTON, MA 02210-2604

Mail Date: 04/20/2010

Applicant	: Richard Rox Anderson	: DECISION ON REQUEST FOR
Patent Number	: 7659301	: RECALCULATION of PATENT
Issue Date	: 02/09/2010	: TERM ADJUSTMENT IN VIEW
Appliction No	: 10/709,122	: OF WYETH AND NOTICE OF INTENT TO
Filed	: 04/14/2004	: ISSUE CERTIFICATE OF CORRECTION
		:

The Request for Recalculation is **GRANTED** to the extent indicated.

The patent term adjustment has been determined to be **1109** days. The USPTO will *sua sponte* issue a certificate of correction reflecting the amount of PTA days determined by the recalculation.

Prior to the issuance of the certificate of correction, the USPTO will afford patentee an opportunity to be heard and request reconsideration. Accordingly, patentee has **one month or thirty (30) days**, whichever is longer, to file a request for reconsideration of this patent term adjustment calculation. See 35 U.S.C. 154(b)(3)(B)(ii) and 37 CFR 1.322(a)(4). No extensions of time will be granted under 37 CFR 1.136.

Patentee should use document code PET.OP if electronically filing a request for reconsideration of this patent term adjustment calculation. The patentee must also include the information required by 37 CFR 1.705(b)(2) and the fee required by 37 CFR 1.18(e). If patentee does not file a timely request for reconsideration of this patent term adjustment calculation including the information required by 37 CFR 1.705(b)(2) and the fee required by 37 CFR 1.18(e), the USPTO will issue a certificate of correction reflecting the PTA determination noted above.

Patentee should be aware that in order to preserve the right to review in the United States District Court for the District of Columbia of the USPTO patent term adjustment determination, patentee must ensure that he or she also take the steps required under 35 U.S.C. 154(b)(4)(A) in a timely manner. Nothing in the request for recalculation should be construed as providing an alternative time frame for commencing a civil action under 35 U.S.C. 154(b)(4)(A).

Any questions concerning this decision should be directed to the Office of Patent Legal Administration at 571-272-7702.

Pet. Dec.

UNITED STATES PATENT AND TRADEMARK OFFICE

Commissioner for Patents
United States Patent and Trademark Office
P.O. Box 1450
Alexandria, VA 22313-1450
www.uspto.gov

FEB 9 2005

In re Application of	:	
ARNOTT.	:	
Serial Number: 10/709,172	:	PETITION UNDER
Filed: April 19, 2004	:	M.P.E.P.708.02 V
For: METHOD AND APPARATUS FOR REMOVING OIL SPILLS	:	

This is in response to the petition filed November 12, 2004, requesting that the above-identified application be granted Special Status under Sections 708.02 V of the MPEP and 37 CFR 1.102(c) (**no fee required**).

The request for Special Status considered under Sections 708.02 V is granted because the criteria under 37 CFR 1.102(c) have been met.

The petition is **GRANTED.**

R Crispino

Richard Crispino, Special Programs Examiner
Technology Center 1700
Chemical and Materials Engineering

Godfrey & Kahn S.C.
780 North Water Street
Milwaukee, WI 53202

FILE COPY

RECEIVED
CENTRAL FAX CENTER
NOV 12 2004

BEST AVAILABLE COPY

LA FOLLETTE GODFREY & KAHN
ATTORNEYS AT LAW
P.O. BOX 2719
MADISON, WI 53701-2719
www.gklaw.com

PHONE: 608-284-2613 FAX: 608-257-0609

FAX COVER SHEET

DATE: November 12, 2004 **PAGES (INCLUDING COVER): 3**

TO: **MAIL STOP PETITION**
Commissioner for Patents **FAX: 703-872-9306**

FROM: **Sonali S. Srivastava**
Reg. No. 52,248

PETITION GRANTED

William Krynski
Special Program Examiner
TC 1700

FEB 18 2005

Please see attached Transmittal Form for the following Patent:

Applicant:	Brian ARNOTT
Application No.:	10/709,172
For:	METHOD AND APPARATUS FOR REMOVING OIL SPILLS
Filed:	April 19, 2004
Group Art Unit:	1723
Examiner:	Unknown
Attorney Docket No.:	060494-0001

MN222629_2.DOC

IF YOU HAVE A PROBLEM RECEIVING THIS TRANSMISSION, PLEASE CALL US AS SOON AS POSSIBLE AT 608-257-3911.

THE INFORMATION CONTAINED IN THIS FACSIMILE MESSAGE IS INTENDED ONLY FOR THE PERSONAL AND CONFIDENTIAL USE OF THE DESIGNATED RECIPIENTS NAMED ABOVE. This message may be an attorney-client communication, and as such is privileged and confidential. If the reader of this message is not the intended recipient or an agent responsible for delivering it to the intended recipient, you are hereby notified that you have received this document in error, and that any review, dissemination, distribution or copying of this message is strictly prohibited. If you have received this communication in error, please notify us immediately by telephone and return the original message to us by mail. Thank you.

UNITED STATES PATENT AND TRADEMARK OFFICE

UNITED STATES DEPARTMENT OF COMMERCE
United States Patent and Trademark Office
Address: COMMISSIONER FOR PATENTS
P.O. Box 1450
Alexandria, Virginia 22313-1450
www.uspto.gov

APPLICATION NO.	FILING DATE	FIRST NAMED INVENTOR	ATTORNEY DOCKET NO.	CONFIRMATION NO.
10/709,236	04/23/2004	Cheng-Tung Huang	NAUP0464USA	3235

27765 7590 04/10/2007

NORTH AMERICA INTELLECTUAL PROPERTY CORPORATION
P.O. BOX 506
MERRIFIELD, VA 22116

EXAMINER	
NGUYEN, TUAN H	
ART UNIT	**PAPER NUMBER**
2813	

NOTIFICATION DATE	DELIVERY MODE
04/10/2007	ELECTRONIC

Please find below and/or attached an Office communication concerning this application or proceeding.

Notice of the Office communication was sent electronically on above-indicated "Notification Date" to the following e-mail address(es):

winstonhsu.uspto@gmail.com
Patent.admin.uspto.Rcv@naipo.com
mis.ap.uspto@naipo.com.tw

UNITED STATES PATENT AND TRADEMARK OFFICE

Commissioner for Patents
United States Patent and Trademark Office
P.O. Box 1450
Alexandria, VA 22313-1450
www.uspto.gov

North America Intellectual Property Corporation
P.O. Box 506
Merrifield, Virginia 22116

In re Application of:
Cheung-Tung Huang, et al.
Application No. 10/709,236
Filed: 23 April 2004
For: Method Of Measuring A Gate Channel Length Of A Metal-Oxide Semiconductor Transistor

DECISION ON PETITION
UNDER 37 CFR § 1.48(a)

This is a decision on the petition, filed on 10 October 2006, under 37 C.F.R. § 1.48(a).

The petition is **GRANTED**.

The application is being forward to Technology Center Support Staff to enter inventor Chien-Chieh Huang in the PALM database and to mail a corrected filing receipt.

Carl Whitehead, Jr.
Supervisory Patent Examiner
Art Unit 2813
Active Solid State Devices

UNITED STATES PATENT AND TRADEMARK OFFICE

COMMISSIONER FOR PATENTS
UNITED STATES PATENT AND TRADEMARK OFFICE
P.O. BOX 1450
ALEXANDRIA, VA 22313-1450
www.uspto.gov

AUG - 1 2006

In re Application of TAKAHASHI ET AL.
Appl. No.: 10/709,243
Filed: April 23, 2004
For: ARMATURE OF ROTARY ELECTRICAL APPARATUS

PETITION TO WITHDRAW FINALITY
37 CFR 1.181

This is in response to applicant's petition filed 6/23/06, requesting that the finality of the office action mailed 6/19/06 be withdrawn.

Applicants' petition is GRANTED.

A review of the record shows that the new grounds of rejection in the aforementioned office action were not necessitated by the amendment to the claims. As such, prosecution on the merits of the instant application is not closed, and applicant's response to the 6/19/06 office action will be considered as a response to a non-final action.

Inquiries concerning this decision should be directed to Supervisory Patent Examiner Darren Schuberg at (571) 272-2044.

Richard Seidel
Director
Patent Examining Technology Center 2800

ERNEST A. BEUTLER, ATTORNEY AT LAW
10 RUE MARSEILLE
NEWPORT BEACH, CA 92660

SIMTEK6895

IN THE UNITED STATES PATENT OFFICE

RECEIVED
CENTRAL FAX CENTER
JUN 23 2006

In re Application of

App. No.: 10/709243
Filed: April 23, 2004
Conf. No.: 3242
Title: ARMATURE OF ROTARY ELECTRICAL APPARATUS
Examiner: Y. Comas
Art Unit: 2834

Commissioner for Patents
P.O. Box 1450
Alexandria, VA 22313-1450

I hereby certify that this correspondence and all marked attachments are being deposited with the United States Patent Office via fax to (571) 273-8300 on:
June 23, 2006

Ernest A. Beutler
Reg. No. 19901

PETITION TO WITHDRAW FINALITY

Dear Sir:

The Commissioner is most respectfully requested to exercise his supervisory authority and direct the Examiner to withdraw the finality of the rejection made on June 19, 2006 on the basis that the citation of the new Laurie reference was not a result of the amendment made to the claims in response to the first office action, but was required by the Examiner's failure to comply with the MPEP and specifically Section 904.03 thereof that provides "It is normally not enough that references be selected to meet only the terms of the claims alone, especially if only broad claims are presented; but the search should, insofar as possible, also cover all subject matter which the examiner reasonably anticipates might be incorporated into applicant's amendment."

Also it is submitted that the amendment made did not add to the claim the language quoted by the Examiner in his alleged justification for this new citation, but his admission made in response to applicant's argument that the basic reference did not disclose the feature claimed. The claim as originally presented required the "tooth engaging portions encircling said pole teeth".

Even if the claim was further limited that alleged but not newly presented language was such that the Examiner in making his search should have "reasonably anticipates might be incorporated into applicant's amendment." It is grossly unfair to permit the Examiner to in effect "lie in the weeds" and then prevent applicant from making an amendment as a matter of right to address this newly taken position of his.

App. No.: 10/709243
Filed: April 23, 2004
Conf. No.: 3242

It is believed that no fee is required by this petition.

Respectfully submitted:

Ernest A. Beutler
Reg. No. 19901

Phone (949) 721-1182
Pacific Time

App. No.: 10/709243
Filed: April 23, 2004
Conf. No.: 3242

IN THE CLAIMS

1. (Currently Amended) An armature construction for a rotating electrical machine comprised of a core consisting of a plurality of laminated plates having a circular member from which a plurality of pole teeth radially extend, a pair of insulators positioned on opposite axial sides of said core and having cooperating tooth engaging portions encircling said pole teeth ~~to receive~~ and receiving coil windings there around, a wiring base positioned on one axial side of one of said insulators, said wiring base being made from an insulating material and ~~adapted to receive~~ receiving and retaining the wire ends of the coil windings, and interconnecting members formed on said one insulator and said wiring base for connecting said wiring base in a predetermined axial, radial and circumferential position.

2. (Original) An armature construction as set forth in claim 1 wherein the interconnecting members comprise a pair of interconnecting elements, one on each of the one insulator and the wiring base.

3. (Original) An armature construction as set forth in claim 1 wherein there are a plurality of circumferentially spaced interconnecting members.

4. (Original) An armature construction as set forth in claim 3 wherein each of the interconnecting members comprise a pair of interconnecting elements, one on each of the one insulator and the wiring base.

5. (Original) An armature construction as set forth in claim 2 wherein the interconnecting elements are engageable upon relative axial movement of the wiring base and the insulator in one direction and once engaged prevent relative movement in a direction opposite the one direction.

6. (Original) An armature construction as set forth in claim 5 wherein the interconnecting elements comprise a barbed hook and a receiver therefore.

7. (Original) An armature construction as set forth in claim 6 wherein there are a plurality of circumferentially spaced interconnecting members.

8. (Currently Amended) An armature construction as set forth in claim 1 wherein there is further provided on the wiring ~~board~~ base and the insulator a cooperating cylindrical flange and circumferentially spaced interengaging shoulders for assisting in the radial positioning.

9. (Original) An armature construction as set forth in claim 8 wherein the interconnecting members comprise a pair of interconnecting elements, one on each of the one insulator and the wiring base.

10. (Original) An armature construction as set forth in claim 8 wherein there are a plurality of

App. No.: 10/709243
Filed: April 23, 2004
Conf. No.: 3242

circumferentially spaced interconnecting members.

11. (Original) An armature construction as set forth in claim 10 wherein each of the interconnecting members comprise a pair of interconnecting elements, one on each of the one insulator and the wiring base.

12. (Original) An armature construction as set forth in claim 9 wherein the interconnecting elements are engageable upon relative axial movement of the wiring base and the insulator in one direction and once engaged prevent relative movement in a direction opposite the one direction.

13. (Original) An armature construction as set forth in claim 12 wherein the interconnecting elements comprise a barbed hook and a receiver therefore.

14. (Original) An armature construction as set forth in claim 13 wherein there are a plurality of circumferentially spaced interconnecting members.

UNITED STATES PATENT AND TRADEMARK OFFICE

Commissioner for Patents
United States Patent and Trademark Office
P.O. Box 1450
Alexandria, VA 22313-1450
www.uspto.gov

KRATZ, QUINTOS & HANSON, LLP
1420 K STREET, N.W.
SUITE 400
WASHINGTON DC 20005

MAILED

JUL 13 2009

OFFICE OF PETITIONS

In re Patent No. 7,511,817 :
Issue Date: March 31, 2009 :
Application No. 10/709,244 : ON PETITION
Filed: April 23, 2004 :
Attorney Docket No.040186 :

This is a decision on the petition filed May 5, 2009, which is being treated as a request under 37 CFR 3.81(b)[1] to correct the name of the assignee on the front page of the above-identified patent by way of a Certificate of Correction.

The request is **GRANTED**.

Telephone inquiries concerning this decision may be directed to the undersigned at (571) 272-3208. Inquiries regarding the issuance of a certificate of correction should be directed to the Certificate of Correction Branch at (571) 272-4200.

The Certificates of Correction Branch will be notified of this decision granting the petition under 37 CFR 3.81(b) and directing issuance of the requested Certificate of Correction.

/KOC/
Karen Creasy
Petitions Examiner
Office of Petitions

[1] *See* MPEP 1309, subsection II; and Official Gazette of June 22, 2004.

UNITED STATES PATENT AND TRADEMARK OFFICE

Commissioner for Patents
United States Patent and Trademark Office
P.O. Box 1450
Alexandria, VA 22313-1450
www.uspto.gov

MAR 16 2005

MAILED

MAR 16 2005

OFFICE OF THE DIRECTOR
TC 3600

MALIN HALEY AND DIMAGGIO, PA
1936 S Andrews Avenue
Fort Lauderdale, FL 33316

In re application of	:	**DECISION ON PETITION**
Julius Vivant Dutu	:	**TO MAKE SPECIAL**
Application No. 10/709,268	:	**(ACCELERATED**
Filed: April 26, 2004	:	**EXAMINATION)**
For: SECURITY ENHANCED AUTOMATIC PILOT SYSTEM FOR AIR VEHICLES		

This is in response to the petition filed on February 22, 2005 to make the above-identified application special on the basis of special examining procedure for certain new applications - accelerated examination as set forth in MPEP § 708.02 VIII.

The requirements for granting special status under this section are: (A) a petition to make special accompanied by the fee set forth in 37 CFR 1.17(i); (B) all claims being directed to a single invention, or an election without traverse if the Office determines that all the claims are not directed to a single invention; (C) a statement that a pre-examination search was made listing the field of search; (D) one copy of each of the references deemed most closely related to the subject matter encompassed by the claims if said references are not already of record; and (E) a detailed discussion of how the claimed subject matter is patentable over the references in accordance with 37 CFR 1.111 (b) and (c).

Since all of the requirements for special status under MPEP § 708.02 VIII have been met, the petition is **GRANTED**.

The examiner is directed (1) to make an interference search for possible interfering applications, (2) to promptly examine this application out of turn, and (3) if any interfering application is discovered, to examine such application simultaneously and state in the first official letter of such application that it is being taken out of turn because of a possible interference.

Petitioner is advised that this application will continue to be special, throughout its entire prosecution and pendency, including interference or appeal, if any, only if petitioner makes a prompt ***bona fide*** effort, in response to each Office action, to place the application in condition for allowance, even if it is necessary to conduct an interview with the examiner to accomplish this purpose.

SUMMARY: Petition to Make Special **GRANTED.**

Steven N. Meyers
Special Programs Examiner
Technology Center 3600
(703) 308-3868

SNM/pav: 03/10/05

UNITED STATES PATENT AND TRADEMARK OFFICE

Commissioner for Patents
United States Patent and Trademark Office
P.O. Box 1450
Alexandria, VA 22313-1450
www.uspto.gov

MITCHELL A. SMOLOW
720 HAMPTON ROAD
SHAVERTOWN PA 18708

COPY MAILED

OCT 18 2007

OFFICE OF PETITIONS

In re Application of :
Robert Cohn :
Application No. 10/709,273 : DECISION ON PETITION
Filed: April 26, 2004 : TO MAKE SPECIAL UNDER
Attorney Docket No. 72-002 : 37 CFR 1.102(c)(1)
:

This is a decision on the petition under 37 CFR 1.102(c)(1), filed July 31, 2007, to make the above-identified application special based on applicant's age as set forth in M.P.E.P. § 708.02, Section IV.

The petition is **GRANTED**.

A grantable petition to make an application special under 37 CFR 1.102(c)(1) and MPEP § 708.02, Section IV: Applicant's Age must be accompanied by evidence showing that at least one of the applicants is 65 years of age, or more, such as a birth certificate or a statement by applicant. No fee is required

The instant petition includes a copy of the applicant's driver's license proving that he is 65 years of age or older. Accordingly, the above-identified application has been accorded "special" status.

Telephone inquiries concerning this decision should be directed to Terri Williams at 571-272-2991.

All other inquiries concerning either the examination or status of the application should be directed to the Technology Center.

The application is being forwarded to the Technology Center Art Unit 1794 for action on the merits commensurate with this decision.

Terri Williams
Petitions Examiner
Office of Petitions

UNITED STATES PATENT AND TRADEMARK OFFICE

Commissioner for Patents
United States Patent and Trademark Office
P.O. Box 1450
Alexandria, VA 22313-1450
www.uspto.gov

Tyco Healthcare Group LP
60 MIDDLETOWN AVENUE
NORTH HAVEN, CT 06473

COPY MAILED

OCT 08 2008

OFFICE OF PETITIONS

In re Application of :
John I. Shipp :
Application No. 10/709,297 : DECISION ON PETITION
Filed: April 27, 2004 :
Attorney Docket No. H-US-01160 (203-6224) :

This is a decision on the petition under the unintentional provisions of 37 CFR 1.137(b), filed May 22, 2008, to revive the above-identified application.

The petition is **GRANTED**.

The application became abandoned for failure to reply in a timely manner to the Restriction Requirement/Election, mailed August 31, 2007 , which set a shortened statutory period for reply of one (1) month or thirty (30) days (whichever is later). No extensions of time under the provisions of 37 CFR 1.136(a) were obtained. Accordingly, the application became abandoned on October 1, 2007.

The petition satisfies the requirements of 37 CFR 1.137(b) in that petitioner has supplied (1) the reply in the form of a response and amendment, (2) the petition fee of $1540, and (3) a proper statement of unintentional delay.

Telephone inquiries concerning this decision should be directed to Denise Williams at (571) 272-8930.

This application is being referred to Technology Center AU 3734 for appropriate action by the Examiner in the normal course of business on the reply received.

Brian Brown
Petitions Examiner
Office of Petitions

UNITED STATES PATENT AND TRADEMARK OFFICE

COMMISSIONER FOR PATENTS
UNITED STATES PATENT AND TRADEMARK OFFICE
P.O. BOX 1450
ALEXANDRIA, VA 22313-1450
www.uspto.gov

JUDGE PATENT FIRM
RIVIERE SHUKUGAWA 3RD FL.
3-1 WAKAMATSU-CHO
NISHINOMIYA-SHI, HYOGO 662-0-035 JP JAPAN

COPY MAILED

DEC 07 2005

OFFICE OF PETITIONS

Applicant: Itakura et al.
Appl. No.: 10/709,305
Filing Date: April 28, 2004
Title: SOLDER FILM MANUFACTURING METHOD, HEAT SINK FURNISHED WITH SOLDER FILM, AND SEMICONDUCTOR-DEVICE-AND-HEAT-SINK JUNCTION
Attorney Docket No.: 39.036
Pub. No.: US 2005/0089700 A1
Pub. Date: April 28, 2005

This is a decision on the request for a corrected patent application publication under 37 CFR 1.221(b), filed on June 28, 2005, for the above-identified application.

The request is granted.

The corrected patent application publication will be published in due course, unless the patent issues before the application is republished.

Inquiries relating to this matter may be directed to Mark Polutta at (571) 272-7709 (voice).

Mark O. Polutta
Office of Patent Legal Administration
Office of the Deputy Commissioner
for Patent Examination Policy

UNITED STATES PATENT AND TRADEMARK OFFICE

Commissioner for Patents
United States Patent and Trademark Office
P.O. Box 1450
Alexandria, VA 22313-1450
www.uspto.gov

CONNOLLY BOVE LODGE & HUTZ LLP
SUITE 800
1990 M STREET NW
WASHINGTON DC 20036-3425

COPY MAILED

JUL 1 4 2004

OFFICE OF PETITIONS

In re Application of :
Kern, et al. :
Application No. 10/709,315 : DECISION ACCORDING STATUS
Filed: April 28, 2004 : UNDER 37 CFR 1.47(a)
Attorney Docket No. BUR9-2003-0046-US1 :
For: STOP MOTION IMAGING DETECTION :
SYSTEM AND METHOD

This is in response to the petition under 37 CFR 1.47(a), filed April 28, 2004.

The petition is granted.

Petitioners have shown that the non-signing inventor, Paul A Manfredi, has refused to join in the filing of the above-identified application after having been presented with the application papers. Specifically, the statement of facts of Attorney Anthony J. Canale and the exhibits to the statement establish that the inventor was successfully mailed the application papers, including the specification, claims and drawings, but the inventor refused to sign the declaration unless an unreasonable amount of additional compensation was provided. Petitioners have submitted a declaration in compliance with 37 CFR 1.63 and 1.64.

This application and papers have been reviewed and found in compliance with 37 CFR 1.47(a). This application is hereby accorded Rule 1.47(a) status.

As provided in Rule 1.47(c), this Office will forward notice of this application's filing to the non-signing inventors at the addresses given in the petition. Notice of the filing of this application will also be published in the Official Gazette.

A courtesy copy of this decision will be mailed to the address given on the petition.

After this decision is mailed, the above-identified application will be forwarded to Technology Center 1756 for examination in due course.

Telephone inquiries should be directed to the undersigned at (703) 308-6712.

E. Shirene Willis
Senior Petitions Attorney
Office of Petitions

cc: ANTHONY J. CANALE
IBM CORPORATION
INTELLECTUAL PROPERLY LAW - ZIP 972E
1000 RIVER STREET
ESSEX JUNCTION, VT 05452

UNITED STATES PATENT AND TRADEMARK OFFICE

Commissioner for Patents
United States Patent and Trademark Office
P.O. Box 1450
Alexandria, VA 22313-1450
www.uspto.gov

PAUL A. MANFREDI
382 TWIN PEAKS ROAD
WATERBURY CENTER, VT 05677

COPY MAILED

JUL 1 4 2004

OFFICE OF PETITIONS

In re Application of :
Kern, et al. :
Application No. 10/709,315 :
Filed: April 28, 2004 : LETTER
Attorney Docket No. BUR9-2003-0046-US1 :
For: STOP MOTION IMAGING DETECTION :
SYSTEM AND METHOD

Dear Mr. Manfredi:

You are named as a joint inventor in the above identified United States patent application, filed under the provisions of 35 U.S.C. 116 (United States Code), and 37 CFR 1.47(a), Rules of Practice in Patent Cases. Should a patent be granted on the application you will be designated therein as a joint inventor.

As a named inventor you are entitled to inspect any paper in the file wrapper of the application, order copies of all or any part thereof (at a prepaid cost per 37 CFR 1.19) or make your position of record in the application. Alternatively, you may arrange to do any of the preceding through a registered patent attorney or agent presenting written authorization from you. If you care to join the application, counsel of record (see below) would presumably assist you. Joining in the application would entail the filing of an appropriate oath or declaration by you pursuant to 37 CFR 1.63.

Requests for information regarding your application should be directed to the File Information Unit at (703)308-2733. Information regarding how to pay for and order a copy of the application, or a specific paper in the application, should be directed to Certification Division at (703)308-9726 or 1(800)972-6382 (outside the Washington D.C. area).

Telephone inquiries regarding this communication should be directed to the undersigned at (703) 308-6712.

E. Shirene Willis
Senior Petitions Attorney
Office of Petitions

ATTORNEY OF RECORD CONNOLLY BOVE LODGE & HUTZ LLP
SUITE 800
1990 M STREET NW
WASHINGTON DC 20036-3425

UNITED STATES PATENT AND TRADEMARK OFFICE

COMMISSIONER FOR PATENTS
UNITED STATES PATENT AND TRADEMARK OFFICE
P.O. BOX 1450
ALEXANDRIA, VA 22313-1450
www.uspto.gov

MAILED

JUN 18 2004

DIRECTOR'S OFFICE
TECHNOLOGY CENTER 3600

Darby & Darby, P.C.
Post Office box 5257
New York, NY 10150-5257

In re Application of:		
Earl Rotman, et al	:	DECISION ON
Application No. 10/709,329	:	PETITION TO
Filed: April 28, 2004	:	MAKE SPECIAL
For: STRUCTURE AND METHOD FOR CREATING	:	(Pre-First Action
TRADEABLE FINANCIAL UNITS	:	Interview)

This is a decision on applicant's petition filed April 30, 2004, to have this application made Special under MPEP 708.02 VIII, Accelerated Examination and the request for a Pre-First Office Action interview.

The petition and request meet the requirements of 37 CFR 1.102 and the Piolot Program announced March 31, 2004, and consequently, they are both granted.

This application is being forwarded to the examiner assigned to the case, who will call applicant within sixty days of the mailing of this decision to arrange for an interview which may be in person or by telephone. If you have not heard from the examiner within that time period, please contact the undersigned at 703 308-1020.

The examiner will prepare and have a First Office Action ready for mailing within thirty days of the date of the Interview.

John J. Love, Director
Technology Center 3600
703 308-1020

UNITED STATES PATENT AND TRADEMARK OFFICE

COMMISSIONER FOR PATENTS
UNITED STATES PATENT AND TRADEMARK OFFICE
P.O. BOX 1450
ALEXANDRIA, VA 22313-1450
www.uspto.gov

MAILED

JUN 18 2004

DIRECTOR'S OFFICE
TECHNOLOGY CENTER 3600

Darby & Darby, P.C.
Post Office box 5257
New York, NY 10150-5257

In re Application of:
Earl Rotman, et al
Application No. 10/709,329
Filed: April 28, 2004
For: STRUCTURE AND METHOD FOR CREATING TRADEABLE FINANCIAL UNITS

: DECISION ON
: PETITION TO
: MAKE SPECIAL
: (Pre-First Action
: Interview)

This is a decision on applicant's petition filed April 30, 2004, to have this application made Special under MPEP 708.02 VIII, Accelerated Examination and the request for a Pre-First Office Action interview.

The petition and request meet the requirements of 37 CFR 1.102 and the Piolot Program announced March 31, 2004, and consequently, they are both granted.

This application is being forwarded to the examiner assigned to the case, who will call applicant within sixty days of the mailing of this decision to arrange for an interview which may be in person or by telephone. If you have not heard from the examiner within that time period, please contact the undersigned at 703 308-1020.

The examiner will prepare and have a First Office Action ready for mailing within thirty days of the date of the Interview.

John J. Love, Director
Technology Center 3600
703 308-1020

UNITED STATES PATENT AND TRADEMARK OFFICE

Commissioner for Patents
United States Patent and Trademark Office
P.O. Box 1450
Alexandria, VA 22313-1450
www.uspto.gov

DARBY & DARBY PC
PO BOX 5257
NEW YORK NY 10150-5257

COPY MAILED

MAY 13 2005

OFFICE OF PETITIONS

In re Application of	:	
Rotman, et al.	:	
Application No. 10/709,329	:	DECISION GRANTING
Filed: April 28, 2004	:	PETITION
Attorney Docket No. 20107/1200838-US1	:	

This is a decision on the "PETITION FOR FILING DATE", filed December 23, 2004, the "SUPPLEMENT TO PETITION FOR FILING DATE", filed February 1, 2005, and the "SECOND SUPPLEMENT TO PETITION FOR FILING DATE". The petitions are treated as a petition under 37 CFR 1.53(b), requesting that the application be accorded a filing dated of April 28, 2004, with drawing figures 1 - 8 as part of the original disclosure.

The application was filed electronically on April 28, 2004. On July 15, 2004, applicants filed drawings after noticing that drawings were not in the Image File Wrapper (IFW) file. On December 13, 2004, the Office of Initial Patent Examination mailed a "Notice to File Missing Parts" with respect to additional claims fees that were due, and noting that the application had been accorded a filing date of July 15, 2004, the date applicants submitted substitute drawings.

In response, on December 23, 2004, applicants filed the present petition. The petition is further accompanied by a copy of eight sheets of drawings containing figures 1-8. Petitioner asserts that the application as originally filed did include the eight sheets of drawings. In support thereof, petitioner has included a copy of the USPTO electronic acknowledgment receipt. The receipt indicates that the "Submission was successfully submitted - Even if Informational or Warning Messages appear below, please do not resubmit this application". In addition, the receipt indicated that the submission did not include a declaration.

Petitioner argues that at the time of filing the application, there was no reason to believe that any portion of the application had been missing, especially the drawings. Furthermore, petitioner argues that the application was filed using the IPDAS software package developed by approved USPTO software vendor, AutoDocs, LLC. Lastly, petitioner has included acknowledgment receipts from other applications in which drawings were received. However, these acknowledgment receipts fail to indicate the submission of drawings.

Petitioner's statements concerning the sequence of events and arguments pertaining thereto have been considered and are found to be persuasive. The Office recognizes that petitioner filed the instant application using software approved by the USPTO.

In view thereof, and given the facts and circumstances in this case, the petition is **GRANTED**.

Given the basis for granting this petition, the $130 petition fee has been refunded to Deposit Account No. 04-0100.

The application file is being forwarded to the Office of Initial Patent Examination for further processing with a **filing date of April 28, 2004**, using the application papers filed on that date and the eight drawing figures submitted on petition, and for an indication in Office records that eight (8) sheets of drawings were present on filing.

Telephone inquiries concerning this decision should be directed to Petitions Attorney Cliff Congo at (571)272-3207.

Charles Pearson
Director
Office of Petitions

UNITED STATES PATENT AND TRADEMARK OFFICE

Commissioner for Patents
United States Patent and Trademark Office
P.O. Box 1450
Alexandria, VA 22313-1450
www.uspto.gov

JIANQ CHYUN INTELLECTUAL PROPERTY OFFICE
7 FLOOR-1, NO. 100
ROOSEVELT ROAD, SECTION 2
TAIPEI 100 TW TAIWAN

COPY MAILED

JAN 2 6 2009

OFFICE OF PETITIONS

In re Application of
Yuan-Chia **LU, et al.**
Application No. 10/709,333
Filed: April 29, 2004
Attorney Docket No. **12668-US-PA**

DECISION ON PETITION
UNDER 37 CFR 1.314

This is a decision on the petition under 37 CFR 1.314, filed January 21, 2009, to defer issuance of the patent.

The petition is **GRANTED**.

Issuance will be deferred for a period of one month from the date of this decision. At the end of this period, the application will be referred to Publishing Division to be processed into a patent.

If an additional deferral period is required, another petition and fee should be promptly submitted. The petition must include a showing of extraordinary circumstances. See MPEP 1306.01.

Further correspondence with respect to this matter should be addressed as follows:

By mail: Mail Stop PETITION
Commissioner for Patents
Post Office Box 1450
Alexandria, VA 22313-1450

By hand: Customer Service Window
Mail Stop Petitions
Randolph Building
401 Dulany Street
Alexandria, VA 22314

By Fax: (571) 273-8300
ATTN: Office of Petitions

Telephone inquiries should be directed to Monica A. Graves at (571) 272-7253.

/Monica A. Graves/
Petitions Examiner, Office of Petitions

UNITED STATES PATENT AND TRADEMARK OFFICE

Commissioner for Patents
United States Patent and Trademark Office
P.O. Box 1450
Alexandria, VA 22313-1450
www.uspto.gov

OPPENDAHL PATENT LAW FIRM LLC
P.O. BOX 4850
FRISCO CO 80443-4850

COPY MAILED

MAR 2 9 2007

OFFICE OF PETITIONS

In re Application of :
Elie Seidman :
Application No. 10/709,396 : DECISION ON PETITION
Filed: May 1, 2004 : TO WITHDRAW
Attorney Docket No. EPNA.P-002 : FROM RECORD
:

This is a decision on the Request to Withdraw as attorney or agent of record under 37 C.F.R. § 1.36(b), filed February 15, 2007.

The request is **NOT APPROVED**.

A grantable request to withdraw as attorney/agent of record must be signed by every attorney/agent seeking to withdraw or contain a clear indication that one attorney is signing on behalf of another/others. A request to withdraw will not be approved unless at least 30 (thirty) days would remain between the date of approval and the later of the expiration date of a time to file a response or the expiration date of the maximum time period which can be extended under 37 C.F.R. § 1.136(a).

The request cannot be approved because: there remains less than 30 (thirty days) between the date of this decision and the maximum extendable time period for filing a response to the Office action mailed on September 27, 2006.

All future communications from the Office will continue to be directed to the above-listed address until otherwise notified by applicant.

Telephone inquiries concerning this decision should be directed to Diane Goodwyn at 571-272-6735.

April Wise
Petitions Examiner
Office of Petitions

cc: DAN MARLO

EPANA NETWORKS, INC.
1250 BROADWAY, 30TH FLOOR
NEW YORK, NY 10001

UNITED STATES PATENT AND TRADEMARK OFFICE

Commissioner for Patents
United States Patent and Trademark Office
P.O. Box 1450
Alexandria, VA 22313-1450
www.uspto.gov

HSIEN-LIN CHIU
2F-4, NO. 148, SEC. 4, CHUNG HSIAO EAST ROAD
TAIPEI TW TAIWAN

COPY MAILED

FEB 0 8 2007

OFFICE OF PETITIONS

In re Application of	:	
Chiu, Hsien-Lin	:	
Application No. 10/709,399	:	ON PETITION
Filed: May 2, 2004	:	
Title: VARIABLE SPEED BRUSHLESS DC MOTOR	:	

This is a decision on the petition under 37 C.F.R. § 1.137(b), filed May 8, 2006, to revive the above-identified application.

The petition is **GRANTED.**

The petition satisfies the conditions for revival pursuant to the provisions of 37 CFR 1.137(b) in that (1) the reply in the form of the issue and publication fees; (2) the petition fee; and (3) the required statement of unintentional delay have been received. Accordingly, the response has been accepted as having been unintentionally delayed.

This matter is being referred to the Publishing Division for processing into a patent.

Telephone inquiries regarding this decision should be directed to the undersigned at (571) 272-3206.

Liana Walsh
Petitions Examiner
Office of Petitions

UNITED STATES PATENT AND TRADEMARK OFFICE

Commissioner for Patents
United States Patent and Trademark Office
P.O. Box 1450
Alexandria, VA 22313-1450
www.uspto.gov

Paper No.

NOVAK DRUCE + QUIGG LLP
1300 EYE STREET NW
SUITE 1000 WEST TOWER
WASHINGTON DC 20005

COPY MAILED

DEC 14 2007

OFFICE OF PETITIONS

In re Application of :
Christer Peterson : DECISION ON PETITION
Application No. 10/709,408 :
Filed: May 3, 2004 :
Attorney Docket No. 00173. :
0030.NPUS01 :

This is a decision on the PETITION FOR REVIVAL OF AN APPLICATION FOR PATENT ABANDONED UNINTENTIONALLY UNDER 37 CFR 1.137(b) filed August 25, 2007.

The petition is **GRANTED**.

The above-identified application became abandoned for failure to file a reply to the non-final Office action mailed October 5, 2005. This Office action set a shortened statutory period for reply of three (3) months, with extensions of time obtainable under § 1.136(a). No reply considered timely filed and no extension of time considered obtained, the application became abandoned effective January 6, 2006. A courtesy Notice of Abandonment was mailed on May 3, 2006.

The petition includes the required reply in the form of an amendment, the statement of unintentional delay and payment of the petition fee. No terminal disclaimer is required.

Technology Center AU 2612 has been advised of this decision. The application is, thereby, forwarded to the examiner for consideration of the reply submitted on petition filed August 25, 2007.

Telephone inquiries specific to this matter should be directed to the undersigned at (571) 272-3219.

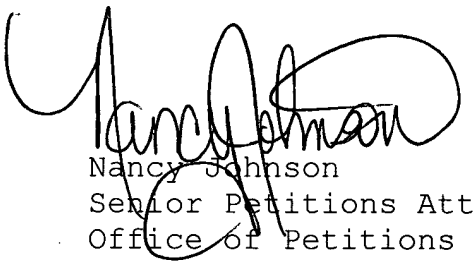

Nancy Johnson
Senior Petitions Attorney
Office of Petitions

UNITED STATES PATENT AND TRADEMARK OFFICE

Commissioner for Patents
United States Patent and Trademark Office
P.O. Box 1450
Alexandria, VA 22313-1450
www.uspto.gov

COPY MAILED

AUG 2 5 2005

OFFICE OF PETITIONS

ROBERT MEEKS
MYERS BIGEL SIBLEY & SAJOVEC
PO BOX 37428
RALEIGH NC 27627

In re Application of
COHEN
Application No. 10/709,421
Filed: May 4, 2004
Attorney Docket No. 9202-15

DECISION
ON PETITION

This is a decision on the petition under 37 CFR 1.137(b), filed July 14, 2005, to revive the above-identified application.

The petition is **GRANTED**.

The above-identified application became abandoned for failure to reply in a timely manner to the non-final Office action mailed November 17, 2004, which set a shortened statutory period for reply of three (3) months. No extensions of time under the provisions of 37 CFR 1.136(a) were obtained. Accordingly, the application became abandoned on February 18, 2005.

The petition satisfies the conditions for revival pursuant to the provisions of 37 CFR 1.137(b) in that (1) the reply in the form of an Amendment pursuant to 37 CFR 1.111; (2) the petition fee of $1500; and (3) the required statement of unintentional delay have been received. Accordingly, the reply to the non-final action of November 17, 2004 is accepted as having been unintentionally delayed.

It is not apparent whether the person signing the statement of unintentional delay was in a position to have firsthand or direct knowledge of the facts and circumstances of the delay at issue. Nevertheless, such statement is being treated as having been made as the result of a reasonable inquiry into the facts and circumstances of such delay. See 37 CFR 10.18(b) and Changes to Patent Practice and Procedure; Final Rule Notice, 62 Fed. Reg. 53131, 53178 (October 10, 1997), 1203 Off. Gaz. Pat. Office 63, 103 (October 21, 1997). In the event that such an inquiry has not been made, petitioner must make such an inquiry. If such inquiry results in the discovery that it is not correct that the entire delay in filing the required reply from the due date for the reply until the filing of a grantable petition pursuant to 37 CFR 1.137(b) was unintentional, petitioner must notify the Office.

Telephone inquiries concerning this decision should be directed to Denise Pothier at (571) 272-4787.

The application matter is being forwarded to Technology Center Art Unit 2838.

Frances Hicks
Petitions Examiner
Office of Petitions

UNITED STATES PATENT AND TRADEMARK OFFICE

Commissioner for Patents
United States Patent and Trademark Office
P.O. Box 1450
Alexandria, VA 22313-1450
www.uspto.gov

SEP 28 2004

MALIN HALEY AND DIMAGGIO, PA
1936 S ANDREWS AVENUE
FORT LAUDERDALE FL 33316

In re Application of	:	
William McCarter	:	DECISION ON PETITION
Serial No.: 10/709,432	:	
Filed: May 5, 2004	:	
For: Cooling Garment for use with a Bullet Proof Vest	:	

This is in response to applicants' petition filed July 15, 2004, to make the above-identified application special under the provisions of 37 CFR 1.102(c), based on the age of the applicant.

Applicant has satisfied the provisions set forth in M.P.E.P. 708.02, IV. Therefore the petition is **GRANTED**.

The application will be forwarded to the examiner for action on the merits commensurate with this decision.

Should there be any questions with regard to this letter please contact John Kittle by letter addressed to the Director, Technology Center 3700/2900, P.O. Box 1450 Alexandria, VA 22313-1450, or by telephone at (703) 308-0873 or by facsimile transmission at (703) 308-3139.

John E. Kittle
Director,
Technology Center 3700/2900

UNITED STATES PATENT AND TRADEMARK OFFICE

Commissioner for Patents
United States Patent and Trademark Office
P.O. Box 1450
Alexandria, VA 22313-1450
www.uspto.gov

ARMSTRONG, KRATZ, QUINTOS, HANSON & BROOKS
1725 K STREET, NW
SUITE 1000
WASHINGTON DC 20006

COPY MAILED

FEB 0 1 2006

OFFICE OF PETITIONS

In re Application of :
Atsushi Mine et al :
Application No. 10/709,435 : ON PETITION
Filed: May 5, 2004 :
Attorney Docket No. 040191 :

This is a decision on the petition, filed January 30, 2006, under 37 CFR 1.313(c)(2) to withdraw the above-identified application from issue after payment of the issue fee.

The petition is **GRANTED.**

The above-identified application is withdrawn from issue for consideration of a submission under 37 CFR 1.114 (request for continued examination). See 37 CFR 1.313(c)(2).

Petitioner is advised that the issue fee paid on December 14, 2005, in the above-identified application cannot be refunded. If, however, the above-identified application is again allowed, petitioner may request that it be applied towards the issue fee required by the new Notice of Allowance.[1]

Telephone inquiries should be directed to the undersigned at (571) 272-3208.

The examiner of Technology Center AU 2829 will consider the request for continued examination under 37 CFR 1.114.

Karen Creasy

Karen Creasy
Petitions Examiner
Office of Petitions
Office of the Deputy Commissioner
for Patent Examination Policy

---

[1] The request to apply the issue fee to the new Notice may be satisfied by completing and returning the new Issue Fee Transmittal Form PTOL-85(b), which includes the following language thereon: "Commissioner for Patents is requested to apply the Issue Fee and Publication Fee (if any) or re-apply any previously paid issue fee to the application identified above." Petitioner is advised that, whether a fee is indicated as being due or not, the Issue Fee Transmittal Form **must** be completed and timely submitted to avoid abandonment. Note the language in bold text on the first page of the Notice of Allowance and Fee(s) Due (PTOL-85).

UNITED STATES PATENT AND TRADEMARK OFFICE

Commissioner for Patents
United States Patent and Trademark Office
P.O. Box 1450
Alexandria, VA 22313-1450
www.uspto.gov

KUEN-YU TSAI
334 OLMSTED ROAD
#119 (STUDIO 6)
STANFORD, CA 94305

COPY MAILED

JUN 20 2008

OFFICE OF PETITIONS

In re Application of :
Kuen-Yu TSAI, et al :
Application No. 10/709,458 : DECISION ON PETITION
Filed: May 6, 2004 :
Attorney Docket No. :

This is a decision on the petition under the unintentional provisions of 37 CFR 1.137(b), filed March 17, 2008, to revive the above-identified application.

The petition is **DISMISSED**.

A grantable petition under 37 CFR 1.137(b) must be accompanied by: (1) the required reply, unless previously filed; (2) the petition fee as set forth in 37 CFR 1.17(m); (3) a statement that the entire delay in filing the required reply from the due date for the reply until the filing of a grantable petition pursuant to 37 CFR 1.137(b) was unintentional; and (4) any terminal disclaimer (and fee as set forth in 37 CFR 1.20(d)) required by 37 CFR 1.137(d). Where there is a question as to whether either the abandonment or the delay in filing a petition under 37 CFR 1.137 was unintentional, the Director may require additional information. *See* MPEP 711.03(c)(II)(C) and (D).

The application became abandoned for failure to reply in a timely manner to the non-final Office action mailed, May 31, 2005, which set a shortened statutory period for reply of three (3) months. No extensions of time under the provisions of 37 CFR 1.136(a) were obtained. Accordingly, the application became abandoned on September 1, 2005.

There are three periods to be considered during the evaluation of a petition under 37 CFR 1.137(b):

(1) the delay in reply that originally resulted in the abandonment;

(2) the delay in filing an initial petition pursuant to 37 CFR 1.137(b) to revive the application; and

(3) the delay in filing a grantable petition pursuant to 37 CFR 1.137(b) to revive the application.

Currently, the delay has not been shown to the satisfaction of the Director to be unintentional for periods (1) and (2).

As to Period (1):

The patent statute at 35 U.S.C. § 41(a)(7) authorizes the Director to revive an "unintentionally abandoned application." The legislative history of Public Law 97-247 reveals that the purpose of 35 U.S.C. § 41(a)(7) is to permit the Office to have more discretion than in 35 U.S.C. §§ 133 or 151 to revive abandoned applications in appropriate circumstances, but places a limit on this discretion, stating that "[u]nder this section a petition accompanied by either a fee of $500 or a fee of $50 **would not be granted where the abandonment** or the failure to pay the fee for issuing the patent **was intentional** as opposed to being unintentional or unavoidable." [emphasis added]. See H.R. Rep. No. 542, 97th Cong., 2d Sess. 6-7 (1982), *reprinted in* 1982 U.S.C.C.A.N. 770-71. The revival of an intentionally abandoned application is antithetical to the meaning and intent of the statute and regulation.

35 U.S.C. § 41(a)(7) authorizes the Director to accept a petition "for the revival of an unintentionally abandoned application for a patent." As amended December 1, 1997, 37 CFR 1.137(b)(3) provides that a petition under 37 CFR 1.137(b) must be accompanied by a statement that the delay was unintentional, but provides that "[t]he Commissioner may require additional information where there is a question whether the delay was unintentional." Where, as here, there is a question whether the initial delay was unintentional, the petitioner must meet the burden of establishing that the delay was unintentional within the meaning of 35 U.S.C. § 41(a)(7) and 37 CFR 1.137(b). *See* In re Application of G, 11 USPQ2d 1378, 1380 (Comm'r Pats. 1989); 37 CFR 1.137(b). Here, in view of the inordinate delay (over 2 1/2 years) in resuming prosecution, there is a question whether the entire delay was unintentional. Petitioner should note that the issue is not whether some of the delay was unintentional by any party; rather, the issue is whether the entire delay has been shown to the satisfaction of the Director to be unintentional.

The question under 37 CFR 1.137(b) for period (1) is whether the delay on the part of the party having the right or authority to reply to avoid abandonment (or not reply) was unintentional. Accordingly, any renewed petition must clearly identify the party having the right to reply to avoid abandonment on September 1, 2005. That party, in turn must explain what effort(s) was made to further reply to the outstanding Office action and, further, why no reply was filed. If no

effort was made to further reply, then that party must explain why the delay in this application does not result from a deliberate course of action (or inaction). Likewise, petitioner should explain why this application became abandoned and what efforts were made to further reply of itself and with whom this matter was discussed. Copies of any correspondence relating to the filing, or to not filing a further reply to the outstanding Office action are required from responsible person(s), petitioner and whoever else was involved with this application at the time of abandonment. Statements are required from any and all persons in the law office, and the responsible person(s) having firsthand knowledge of the circumstances surrounding the lack of a reply to the outstanding Office action. As the courts have made clear, it is pointless for the USPTO to revive a long abandoned application without an adequate showing that the delay did not result from a deliberate course of action. *See* Lawman Armor v. Simon, 2005 U.S. Dist. LEXIS 10843, 74 USPQ2d 1633 (DC EMich 2005); Field Hybrids, LLC v. Toyota Motor Corp., 2005 U.S. Dist. LEXIS 1159 (D. Minn Jan. 27, 2005); Lumenyte Int'l Corp. v. Cable Lite Corp., Nos. 96-1011, 96-1077, 1996 U.S. App. LEXIS 16400, 1996 WL 383927 (Fed. Cir. July 9, 1996) (unpublished) (patents held unenforceable due to a finding of inequitable conduct in submitting an inappropriate statement that the abandonment was unintentional).

As to Period (2):

Likewise, where the applicant deliberately chooses not to seek or persist in seeking the revival of an abandoned application, or where the applicant deliberately chooses to delay seeking the revival of an abandoned application, the resulting delay in seeking revival of the abandoned application cannot be considered as "unintentional" within the meaning of 37 CFR 1.137(b). *See* MPEP 711.03(c).

The language of both 35 U.S.C. § 41(a)(7) and 37 CFR 1.137(b) are clear and unambiguous, and, furthermore, without qualification. That is, the delay in filing the reply during prosecution, as well as in filing the petition seeking revival, must have been, without qualification, "unintentional" for the reply to now be accepted on petition. The Office requires that the entire delay be at least unintentional as a prerequisite to revival of an abandoned application to prevent abuse and injury to the public. *See* H.R. Rep. No. 542, 97th Cong., 2d Sess. 7 (1982), reprinted in 1982 U.S.C.C.A.N. 771 ("[i]n order to prevent abuse and injury to the public the Commissioner . . . could require applicants to act promptly after becoming aware of the abandonment"). The December 1997 change to 37 CFR 1.137 did not create any new right to overcome an intentional delay in seeking revival, or in renewing an attempt at seeking revival, of an abandoned application. *See* Changes to Patent Practice and Procedure; Final Rule Notice, 62 Fed. Reg. 53131, 53160 (October 10, 1997), 1203 Off. Gaz. Pat. Office 63, 87 (October 21, 1997), which clearly stated that any protracted delay (here, over 2 1/2 years) could trigger, as here, a request for additional information. As the courts have since made clear, a protracted delay in seeking revival, as here, requires a petitioner's detailed explanation seeking to excuse the delay as

opposed to USPTO acceptance of a general allegation of unintentional delay. *See* Lawman Armor v. Simon, 2005 U.S. Dist. LEXIS 10843, 74 USPQ2d 1633, at 1637-8 (DC EMich 2005); Field Hybrids, LLC v. Toyota Motor Corp., 2005 U.S. Dist. LEXIS 1159 (D. Minn Jan. 27, 2005) at *21-*23. Statements are required from any and all persons then at the law office and the responsible person(s) having firsthand knowledge of the circumstances surrounding the protracted delay, after the abandonment date, in seeking revival.

As noted in MPEP 711.03(c)(II), subsection D, in instances in which such petition was not filed within 1 year of the date of abandonment of the application, applicants should include:

> (A) the date that the applicant first became aware of the abandonment of the application; and
> (B) a showing as to how the delay in discovering the abandoned status of the application occurred despite the exercise of due care or diligence on the part of the applicant.

In either instance, applicant's failure to carry the burden of proof to establish that the "entire" delay was "unavoidable" or "unintentional" may lead to the denial of a petition under 37 CFR 1.137(b), regardless of the circumstances that originally resulted in the abandonment of the application. *See also* New York University v. Autodesk, 2007 U.S. DIST LEXIS, U.S.District LEXIS 50832, *10 -*12 (S.D.N.Y. 2007)(protracted delay in seeking revival undercuts assertion of unintentional delay).

There is no indication that the person signing the petition was ever given a power of attorney to prosecute the application. If the person signing the petition desires to receive future correspondence regarding this application, the appropriate power of attorney document must be submitted. While a courtesy copy of this decision is being mailed to the person signing the petition, all future correspondence will be directed to the address currently of record until appropriate instructions are received.

Any request for reconsideration of this decision must be submitted within TWO (2) MONTHS from the mail date of this decision. Extensions of time under 37 CFR 1.136(a) are permitted. The reconsideration request should include a cover letter entitled "Renewed Petition under 37 CFR 1.137(b)." This is **not** a final agency action within the meaning of 5 U.S.C. § 704.

Any renewed petition may be addressed as follows:

By Mail: Mail Stop PETITION
Commissioner for Patents
P. O. Box 1450
Alexandria, VA 22313-1450

By hand: U. S. Patent and Trademark Office
Customer Service Window, Mail Stop Petitions
Randolph Building
401 Dulany Street
Alexandria, VA 22314

The centralized facsimile number is **(571) 273-8300.**

Correspondence regarding this decision may also be filed through the electronic filing system of the USPTO.

To expedite consideration, petitioner may wish to contact the undersigned regarding the filing of the renewed petition under 37 CFR 1.137(b).

Telephone inquiries concerning this decision should be directed to the Diane Goodwyn at (571) 272-6735.

Thurman Page
Petitions Examiner
Office of Petitions

cc: JOSEPH A. NGUYEN
IPSG.P.C.
P.O. BOX700540
SAN JOSE, CA 95170

UNITED STATES PATENT AND TRADEMARK OFFICE

COMMISSIONER FOR PATENTS
UNITED STATES PATENT AND TRADEMARK OFFICE
P.O. BOX 1450
ALEXANDRIA, VA 22313-1450
www.uspto.gov

Paper No.

Yefim Zhuk
11191 E. Ida Pl.
Englewood CO 80111

COPY MAILED

OCT 16 2007

OFFICE OF PETITIONS

In re Application of :
Yefim Zhuk : DECISION ON PETITION
Application No. 10/709,460 :
Filed: May 6, 2004 :
Title: KNOWLEDGE-DRIVEN :
ARCHITECTURE :

This is a decision on the Petition to withdraw holding of abandonment under 37 CFR 1.181 filed March 15, 2007 (and resubmitted April 12, 2007).

The above-identified application became abandoned for failure to file a reply to the non-final Office action mailed July 26, 2006. This Office action set a shortened statutory period for reply of three (3) months, with extensions of time obtainable under § 1.136(a). No reply considered timely filed and no extension of time considered obtained, the application became abandoned effective October 27, 2006. A courtesy Notice of Abandonment was mailed on March 7, 2007.

In response, applicant timely filed the instant petition to withdraw the holding of abandonment within 2 months of the mailing of the notice of abandonment. Applicant contends that he timely filed a response by way of facsimile transmission on October 23, 2007. In support thereof, applicant submits a copy of the response and a copy of their facsimile confirmation USPTO. The petition does not include a statement from the person who sent the response by facsimile transmission.

Nonetheless, petitioner's evidence and arguments have been considered and it is concluded that the requirements of 37 CFR

§ 1.8(b) have been met. Petitioner has shown to the satisfaction of the Director that the response should be considered timely filed by facsimile transmission on October 23, 2006. It is noted that there is a facsimile confirmation that shows the response was transmitted to the wrong number, but there is also a facsimile confirmation that shows the response was resent on October 23, 2006 to the correct number 571-273-8300.

In view thereof, the Notice of Abandonment mailed March 7, 2007 is hereby **vacated**, and the holding of abandonment is **withdrawn**.

The petition under § 1.181 is **GRANTED**.

No fee is required on petition under § 1.181.

Technology Center AU 2168 has been advised of this decision. The application file is, thereby, forwarded to the Technology Center's technical support staff to withdraw the holding of abandonment and for consideration by the examiner of the response resubmitted on petition filed March 14, 2007 (and resubmitted April 12, 2007).

Telephone inquiries specific to this matter should be directed to the undersigned at (571) 272-3219.

Nancy Johnson
Senior Petitions Attorney
Office of Petitions

UNITED STATES PATENT AND TRADEMARK OFFICE

Commissioner for Patents
United States Patent and Trademark Office
P.O. Box 1450
Alexandria, VA 22313-1450
www.uspto.gov

SNELL & WILMER
ONE ARIZONA CENTER
400 EAST VAN BUREN
PHOENIX, AZ 85004-0001

COPY MAILED

MAR 0 7 2005

OFFICE OF PETITIONS

In re Application of :
Peter Van Der Sluis :
Application No. 10/709,473 : ON PETITION
Filed: May 7, 2004 :
Attorney Docket No. 43887.0100 :

This is a decision on the petition under 37 CFR 1.137(b), filed March 1, 2005, to revive the above-identified application.

The petition is **GRANTED**.

The above-identified application became abandoned for failure to reply in a timely manner to the Notice to File Missing Parts of Nonprovisional Application (Notice) mailed July 1, 2004. The Notice set a period for reply of two (2) months from the mail date of the Notice. No extensions of time under the provisions of 37 CFR 1.136(a) were obtained. Accordingly, the above-identified application became abandoned on September 2, 2004.

Pursuant to petitioner's authorization, Deposit Account No. 19-2814 was charged a total of $815.00 -- $750.00 for the petition to revive an unintentionally abandoned application and $65.00 for the surcharge - late filing declaration.

Telephone inquiries concerning this decision should be directed to Wan Laymon at (571) 272-3220.

This matter is being referred to the Office of Initial Patent Examination for preexamination processing.

Wan Laymon
Petitions Examiner
Office of Petitions
Office of the Deputy Commissioner
for Patent Examination Policy

UNITED STATES PATENT AND TRADEMARK OFFICE

Commissioner for Patents
United States Patent and Trademark Office
P.O. Box 1450
Alexandria, VA 22313-1450
www.uspto.gov

CHRISTOPHER & WEISBERG, P.A.
200 EAST LAS OLAS BOULEVARD
SUITE 2040
FORT LAUDERDALE, FL 33301

COPY MAILED

NOV 07 2005

OFFICE OF PETITIONS

In re Application of :
Brendan Roberts, et al. :
Application No. 10/709,477 : ON PETITION
Filed: May 7, 2004 :
Attorney Docket No. 10978.7801U :

This is a decision on the petition under 37 CFR 1.137(b) filed September 8, 2005, to revive the above-identified application.

The petition is **GRANTED.**

The above-identified application became abandoned for failure to reply in a timely manner to the Notice to File Missing Parts of Nonprovisional Application mailed July 1, 2004. The Notice set a period for reply of two (2) months from the mail date of the Notice. No extensions of time under the provisions of 37 CFR 1.136(a) were obtained. Accordingly, the above-identified application became abandoned on September 2, 2004.

Telephone inquiries concerning this decision should be directed to the undersigned at (571) 272-3229.

This application matter is being forwarded to the Office of Initial Patent Examination for further processing.

Retta Williams

Retta Williams
Petitions Examiner
Office of Petitions
Office of the Deputy Commissioner
for Patent Examination Policy

UNITED STATES PATENT AND TRADEMARK OFFICE

Commissioner for Patents
United States Patent and Trademark Office
P.O. Box 1450
Alexandria, VA 22313-1450
www.uspto.gov

CHRISTOPHER & WEISBERG, P.A.
200 EAST LAS OLAS BOULEVARD
SUITE 2040
FORT LAUDERDALE, FL 33301

COPY MAILED

APR 14 2008

OFFICE OF PETITIONS

In re Application of

ROBERTS, Brendan et al.
Application No. 10/709,477
Filed: May 07, 2004
Attorney Docket No. **10978.7801U**

DECISION ON PETITION
TO WITHDRAW
FROM RECORD

This is a decision on the Request to Withdraw as attorney or agent of record under 37 C.F.R. § 1.36(b), filed March 24, 2008.

The request is **NOT APPROVED**.

A grantable request to withdraw as attorney/agent of record must be signed by every attorney/agent seeking to withdraw or contain a clear indication that one attorney is signing on behalf of another/others. A request to withdraw will not be approved unless at least 30 (thirty) days would remain between the date of approval and the later of the expiration date of a time to file a response or the expiration date of the maximum time period which can be extended under 37 C.F.R. § 1.136(a).

The request cannot be approved because no reasons for withdrawal have been provided. The Office cannot, at this time, determine whether practitioner's request is one of the mandatory or permissive reasons enumerated in 37 CFR 10.40. Any subsequent requests must include reasons for withdrawal. Please note that there is a space provided for on PTO/SB/83 (Request to Withdraw as Attorney or Agent) to supply practitioner's reasons.

All future communications from the Office will continue to be directed to the above-listed address until otherwise notified by applicant.

Telephone inquiries concerning this decision should be directed to the undersigned at 571-272- 4231.

Michelle R. Eason
Paralegal Specialist
Office of Petitions

cc: **SAM HARWELL PATTERSON, II**
ONE LAS OTAS CIRCLE
APARTMENT #211
FORT LAUDERDALE, FLORIDA 33316

UNITED STATES PATENT AND TRADEMARK OFFICE

Commissioner for Patents
United States Patent and Trademark Office
P.O. Box 1450
Alexandria, VA 22313-1450
www.uspto.gov

CHRISTOPHER & WEISBERG, P.A.
200 EAST LAS OLAS BOULEVARD
SUITE 2040
FORT LAUDERDALE, FL 33301

COPY MAILED

MAY 27 2008

In re Application of :
ROBERTS, Brendan et al. :
Application No. 10/709,477 : DECISION ON PETITION
Filed: May 07, 2004 : TO WITHDRAW
Attorney Docket No. **10978.7801U** : FROM RECORD
:

This is a decision on the Request to Withdraw as attorney or agent of record under 37 C.F.R. § 1.36(b), filed April 30, 2008.

The request is **NOT APPROVED** because it is moot.

A review of the file record indicates that the power of attorney to Christopher & Weisberg, P.A. has been revoked by the applicant of the patent application on April 30, 2008. Accordingly, the request to withdraw under 37 C.F.R. § 1.36(b) is moot.

All future communications from the Office will continue to be directed to the below-listed address until otherwise notified by applicant.

Telephone inquires concerning this decision should be directed to Michelle R. Eason at 571-272-4231.

Michelle R. Eason
Paralegal Specialist
Office of Petitions

cc: **SAM HARWELL PATTERSON, II**
1 LAS OLAS CIRCLE
APT. 211
FT. LAUDERDALE, FL 33316

UNITED STATES PATENT AND TRADEMARK OFFICE

Commissioner for Patents
United States Patent and Trademark Office
P.O. Box 1450
Alexandria, VA 22313-1450
www.uspto.gov

NORTH AMERICA INTELLECTUAL
PROPERTY CORPORATION
P.O. BOX 506
MERRIFIELD VA 22116

COPY MAILED

JUN 23 2009

OFFICE OF PETITIONS

In re Application of :
Chien, et al. :
Application No. 10/709,506 : DECISION
Filed/Deposited: 11 May, 2004 :
Attorney Docket No. VASP0004USA :

This is a decision on the petition filed on 1 June, 2009, considered as a petition under 37 C.F.R. §1.181 (no fee) requesting withdrawal of the holding of abandonment in the above-identified application.

NOTE:

Petitioner is cautioned that the address on the petition is different than that of record.

If Petitioner desires to receive future correspondence regarding this application, the appropriate Notice must be submitted.

A courtesy copy of this decision will be mailed to Petitioner.

However, all future correspondence will be directed to the address of record until such time as appropriate instructions are received to the contrary.

Petitioner, as one registered to practice before the Office, is aware that:

- ***submission of a Notice of Change of Address (1 June, 2009) is not a proper substitute for a Revocation/Power of Attorney; and***
- ***a proper Revocation/Power of Attorney must be supported by a certificate pursuant to 37 C.F.R. §3.73(b).***

The petition under 37 C.F.R. §1.181 is **DISMISSED**.

Any request for reconsideration of this decision or any petition in the alternative is to be filed **within two (2) months** from the mail date of this decision. *Note* 37 C.F.R. §1.181(f). The request for reconsideration should include a cover letter and be entitled as a "Renewed Petition under 37 C.F.R. §1.181 to Withdraw the Holding of Abandonment."

This is **not** a final agency action within the meaning of 5 U.S.C. §704.

Petitioner may, in the alternative, file a petition (with fee) pursuant to 37 C.F.R. §1.137(b) with a reply and statement of unintentional delay.

As to the Request to Withdraw
the Holding of Abandonment

Petitioner is directed to the Commentary at MPEP §711.03(c)(I) for guidance as to the proper showing and timeliness requirements for relief under 37 C.F.R. §1.181.

Petitioner appears not to comply with the guidance in the Commentary at MPEP §711.03(c)(I)—as discussed below, Petitioner has failed to satisfy the showing requirements set forth there. Petitioner may find it beneficial to review that material and move step-wise through that guidance in the effort to satisfy the showing requirements (statements and supporting documentation).

BACKGROUND

The record reflects as follows:

Petitioner failed to reply timely and properly to the final Office action (copy enclosed) mailed on 21 April, 2008, with reply due absent extension of time on or before 21 July, 2008.

The application went abandoned by operation of law after midnight 21 July, 2008.

The Office mailed the Notice of Abandonment on 30 October, 2008.

On 1 June, 2009, Petitioner Bruce H. Troxell (Reg. 26,592) (Petitioner) filed, *inter alia*, a petition pursuant to 37 C.F.R. §1.181 and an averment of non-receipt, and averred the filing of a Revocation/Power of Attorney on 3 October, 2007. However, Petitioner makes no showing that the Revocation/Power of Attorney submitted at the time constituted a proper submission, in that the record fails to evidence that the Revocation/Power of Attorney was properly supported by a certificate pursuant to 37 C.F.R. §3.73(b). Moreover, while Petitioner protests that he had no Notice that his Revocation/Power of Attorney had not been entered/accepted, the record clearly evidences that the 31 December, 2007, Notice of Non-Compliant Amendment was mailed to the

address of record (Merrifield, VA), and on 9 January, 2008, Petitioner clearly filed a reply thereto.

Thus, Not only did Petitioner fail to perfect the Revocation/Power of Attorney, but he ignored the clear demonstration that no change of representation/address had been entered by the time Petitioner submitted a reply on 9 January, 2008—more than three months before the Examiner mailed the final Office action.

Thus, Petitioner failed to comply with the requirements expressly set forth in the guidance in the Commentary at MPEP §711.03(c)(I) requiring:

- a copy, *inter alia,* of the Petitioner's/firm due-date docket/calendar and a copy of the docket sheet (or file jacket cover) for the instant application and;

- recitations, *inter alia*, as to a statement of non-receipt "at the correspondence address of record," a statement of search of the file and non-discovery, a description of the docketing system, a statement of system reliability, and other such requirements as set forth in the guidance in the Commentary at MPEP 711.03(c)(I).

The guidance in the Commentary at MPEP 711.03(c)(I) provides in pertinent part:

***

> The showing required to establish nonreceipt of an Office communication must include a statement from the practitioner describing the system used for recording an Office action received at the correspondence address of record with the USPTO. The statement should establish that the docketing system is sufficiently reliable. It is expected that the record would include, but not be limited to, the application number, attorney docket number, the mail date of the Office action and the due date for the response.
>
> Practitioner must state that the Office action was not received at the correspondence address of record, and that a search of the practitioner's record(s), including any file jacket or the equivalent, and the application contents, indicates that the Office action was not received. A copy of the record(s) used by the practitioner where the non-received Office action would have been entered had it been received is required.
>
> A copy of the practitioner's record(s) required to show non-receipt of the Office action should include the master docket for the firm. That is, if a three month period for reply was set in the nonreceived Office action, a copy of the master docket report showing all replies docketed for a date three months from the mail date of the nonreceived Office action must be submitted as documentary proof of nonreceipt of the Office action. If no such master docket exists, the practitioner should so state and provide other evidence such as, but not limited to, the following: the application file jacket; incoming mail log;

calendar; reminder system; or the individual docket record for the application in question.[1]

***

Petitioner is requested to review the requirements as set forth in the guidance in the Commentary at MPEP 711.03(c)(I), and then seek to satisfy those requirements.

If, as it appears, Petitioner cannot satisfy the required showing pursuant to 37 C.F.R. §1.181, Petitioner may, in the alternative, file a petition to revive pursuant to the regulations at 37 C.F.R. §1.137(b)—requirements include petition, petition fee, reply (to the Office action) and a terminal disclaimer and fee where appropriate. Petitioner should review the current fee schedule at the Office website for fees due at the time of filing.

Out of an abundance of caution, Petitioners always are reminded that the filing of a petition under 37 C.F.R. §1.181 does not toll any periods that may be running any action by the Office and a petition seeking relief under the regulation must be filed within two (2) months of the act complained of (*see*: 37 C.F.R. §1.181(f)), and those registered to practice and all others who make representations before the Office are reminded to inquire into the underlying facts of representations made to the Office and support averments with the appropriate documentation–since all owe to the Office the continuing duty to disclose.[2]

The availability of applications and application papers online to applicants/practitioners who diligently associate their Customer Number with the respective application(s) now provides an applicant/practitioner on-demand information as to events/transactions in an application.

STATUTES, REGULATIONS

Congress has authorized the Commissioner to "revive an application if the delay is shown to the satisfaction of the Commissioner to have been "unavoidable." 35 U.S.C. §133 (1994). And the regulations at 37 C.F.R. §1.137(a) and (b) set forth the requirements for a Petitioner to revive a previously unavoidably or unintentionally, respectively, abandoned application.[3],[4]

---

[1] *See*: MPEP §711.03(c) (I)(A).

[2] See supplement of 17 June, 1999. The Patent and Trademark Office is relying on Petitioner's duty of candor and good faith and accepting a statement made by Petitioner. See Changes to Patent Practice and Procedure, 62 Fed. Reg. at 53160 and 53178, 1203 Off. Gaz. Pat. Office at 88 and 103 (responses to comments 64 and 109)(applicant obligated under 37 C.F.R. §10.18 to inquire into the underlying facts and circumstances when providing statements to the Patent and Trademark Office).

[3] See: Changes to Patent Practice and Procedure; Final Rule Notice, 62 Fed. Reg. at 53158-59 (October 10, 1997), 1203 Off. Gaz. Pat. Office at 86-87 (October 21, 1997).

[4] The language of 35 U.S.C. §133 and 37 C.F.R. §1.137(a) is clear, unambiguous, and without qualification: the delay in tendering the reply to the outstanding Office action, as well as filing the first petition seeking revival, must have been unavoidable for the reply now to be accepted on petition. (Therefore, by example, an unavoidable delay in the payment of the Filing Fee might occur if a reply is shipped by the US Postal Service, but due to catastrophic accident, the delivery is not made.) Delays in responding properly raise the question whether delays are unavoidable. Where there is a question whether the delay was unavoidable, Petitioners must meet the burden of establishing that the delay was unavoidable within the meaning of 35 U.S.C. §133 and 37 C.F.R. §1.137(a) And the Petitioner must be diligent in attending to the matter. Failure to do so does not constitute the care required under Pratt, and so cannot satisfy the test for diligence and due care. (By contrast,

Moreover, the Office has set forth in the Commentary at MPEP §711.03(c)(I) the showing and timeliness requirements for a proper showing for relief under 37 C.F.R. §1.181 in these matters.

Decisions on reviving abandoned applications on the basis of "unavoidable" delay have adopted the reasonably prudent person standard in determining if the delay was unavoidable:

> The word 'unavoidable' . . . is applicable to ordinary human affairs, and requires no more or greater care or diligence than is generally used and observed by prudent and careful men in relation to their most important business. It permits them in the exercise of this care to rely upon the ordinary and trustworthy agencies of mail and telegraph, worthy and reliable employees, and such other means and instrumentalities as are usually employed in such important business. If unexpectedly, or through the unforeseen fault or imperfection of these agencies and instrumentalities, there occurs a failure, it may properly be said to be unavoidable, all other conditions of promptness in its rectification being present.[5]

Allegations as to the Request to Withdraw the Holding of Abandonment

The guidance in the Commentary at MPEP §711.03(c)(I) specifies the showing required and how it is to be made and supported.

Petitioner appears not to have made the showing required.

CONCLUSION

Accordingly, The petition under 37 C.F.R. §1.181 is **dismissed**.

ALTERNATIVE VENUE

Should Petitioner wish to revive the application, Petitioner may wish to properly file a petition to the Commissioner requesting revival of an application abandoned due to unintentional delay under 37 C.F.R. §1.137(b). (See: http://www.uspto.gov/web/offices/pac/mpep/documents/0700_711_03_c.htm#sect711.03c)

---

unintentional delays are those that do not satisfy the very strict statutory and regulatory requirements of unavoidable delay, and also, by definition, are not intentional.))

[5] In re Mattullath, 38 App. D.C. 497, 514-15 (1912)(quoting Ex parte Pratt, 1887 Dec. Comm'r Pat. 31, 32-33 (1887)); see also Winkler v. Ladd, 221 F. Supp. 550, 552, 138 USPQ 666, 167-68 (D.D.C. 1963), aff'd, 143 USPQ 172 (D.C. Cir. 1963); Ex parte Henrich, 1913 Dec. Comm'r Pat. 139, 141 (1913). In addition, decisions on revival are made on a "case-by-case basis, taking all the facts and circumstances into account." Smith v. Mossinghoff, 671 F.2d 533, 538, 213 USPQ 977, 982 (D.C. Cir. 1982). Finally, a petition cannot be granted where a petitioner has failed to meet his or her burden of establishing that the delay was "unavoidable." Haines v. Quigg, 673 F. Supp. 314, 316-17, 5 USPQ2d 1130, 1131-32 (N.D. Ind. 1987).

A petition to revive on the grounds of unintentional delay must be filed promptly and such petition must be accompanied by the reply, the petition fee, a terminal disclaimer and fee where appropriate and a statement that "the entire delay in filing the required reply from the due date for the reply until the filing of a grantable petition was unintentional." (The statement is in the form available online.)

Further correspondence with respect to this matter should be addressed as follows:

By Mail:
Mail Stop PETITION
Commissioner for Patents
P. O. Box 1450
Alexandria, VA 22313-1450

By hand:
U. S. Patent and Trademark Office
Customer Service Window, Mail Stop Petitions
Randolph Building
401 Dulany Street
Alexandria, VA 22314

By facsimile:
(571) 273-8300
Attn: Office of Petitions

Telephone inquiries regarding this decision may be directed to the undersigned at (571) 272-3214—it is noted, however, that all practice before the Office is in writing (see: 37 C.F.R. §1.2[6]) and the proper authority for action on any matter in this regard are the statutes (35 U.S.C.), regulations (37 C.F.R.) and the commentary on policy (MPEP). Therefore, no telephone discussion may be controlling or considered authority for Petitioner's action(s).

/John J. Gillon, Jr./
John J. Gillon, Jr.
Senior Attorney
Office of Petitions

CC
TROXELL LAW OFFICE PLLC
5205 LEESBURG PIKE, SUITE 1404
FALLS CHURCH, VA 22041

[6] The regulations at 37 C.F.R. §1.2 provide:

§1.2 Business to be transacted in writing.

All business with the Patent and Trademark Office should be transacted in writing. The personal attendance of applicants or their attorneys or agents at the Patent and Trademark Office is unnecessary. The action of the Patent and Trademark Office will be based exclusively on the written record in the Office. No attention will be paid to any alleged oral promise, stipulation, or understanding in relation to which there is disagreement or doubt.

UNITED STATES PATENT AND TRADEMARK OFFICE

Commissioner for Patents
United States Patent and Trademark Office
P.O. Box 1450
Alexandria, VA 22313-1450
www.uspto.gov

MUNCY, GEISSLER, OLDS & LOWE, PLLC
P.O. BOX 1364
FAIRFAX, VA 222038-1364

COPY MAILED

DEC 0 2 2009

OFFICE OF PETITIONS

In re Application of :
Liang-Chen Chien, et al. :
Application No. 10/709,506 : DECISION ON PETITION
Filed: May 11, 2004 :
Attorney Docket No. VASP0004USA :

This is a decision on the petition under the unintentional provisions of 37 CFR 1.137(b), filed October 7, 2009, to revive the above-identified application.

The application became abandoned for failure to timely file a reply within the meaning of 37 CFR 1.113 to the final Office action of April 21, 2008. The proposed reply required for consideration of a petition to revive must be a Notice of Appeal (and appeal fee required by 37 CFR 41.20(b)(2), an amendment that *prima facie* places the application in condition for allowance, a Request for Continued Examination and submission (37 CFR 1.114), or the filing of a continuing application under 37 CFR 1.53(b). See MPEP 711.03(c)(II)(A)(2). No extensions of time pursuant to the provisions of 37 CFR 1.136(a) were obtained. Accordingly, the date of abandonment of this application is July 22, 2008.

The petition satisfies the requirements of 37 CFR 1.137(b) in that petitioner has supplied (1) the reply in the form of a Request for Continued Examination (RCE) and fee of $405, and the submission required by 37 CFR 1.114; (2) the petition fee of $810; and (3) a proper statement of unintentional delay.

In view of the above, the petition is **GRANTED**.

Telephone inquiries concerning this decision should be directed to the undersigned at (571) 272-1642. All other inquiries concerning the examination or status of this application should be directed to the Technology Center.

This application is being referred to Technology Center AU 2629 for processing of the RCE and for appropriate action by the Examiner in the normal course of business on the amendment submitted in accordance with 37 CFR 1.114.

April M. Wise
Petitions Examiner
Office of Petitions

UNITED STATES PATENT AND TRADEMARK OFFICE

UNITED STATES DEPARTMENT OF COMMERCE
United States Patent and Trademark Office
Address: COMMISSIONER FOR PATENTS
P.O. Box 1450
Alexandria, Virginia 22313-1450
www.uspto.gov

APPLICATION NUMBER	FILING OR 371(C) DATE	FIRST NAMED APPLICANT	ATTY. DOCKET NO./TITLE
10/709,506	05/11/2004	Liang-Chen Chien	5900/0146PUS1

CONFIRMATION NO. 3505

60601
Muncy, Geissler, Olds & Lowe, PLLC
P.O. BOX 1364
FAIRFAX, VA 22038-1364

POA ACCEPTANCE LETTER

OC000000039009755

Date Mailed: 11/30/2009

NOTICE OF ACCEPTANCE OF POWER OF ATTORNEY

This is in response to the Power of Attorney filed 10/07/2009.

The Power of Attorney in this application is accepted. Correspondence in this application will be mailed to the above address as provided by 37 CFR 1.33.

/amwise/

Office of Data Management, Application Assistance Unit (571) 272-4000, or (571) 272-4200, or 1-888-786-0101

UNITED STATES PATENT AND TRADEMARK OFFICE

Commissioner for Patents
United States Patent and Trademark Office
P.O. Box 1450
Alexandria, VA 22313-1450
www.uspto.gov

Pablo Meles
Akerman Senterfitt
PO Box 3188
West Palm Beach, FL 33402

COPY MAILED

FEB 16 2007

OFFICE OF PETITIONS

In re Application of Petros :
Application No. 10/709,511 :
Filing Date: May 11, 2004 :
For: Antenna With Parasitic Wings :

Decision on Petition

This is a decision on the petition filed October 9, 2006, under 37 CFR 1.181 to withdraw the holding of abandonment of the application, or in the alternative, under 37 CFR 1.137(b) to revive the application.

The petition under 37 CFR 1.181 is **dismissed.**

The petition under 37 CFR 1.137(b) is **dismissed**.

The above-identified application became abandoned for failure to reply in a timely manner to the final Office action mailed November 28, 2005, which set a shortened statutory period for reply of three (3) months. An extension of time under the provisions of 37 CFR 1.136(a) was not obtained. Accordingly, the above-identified application became abandoned on March 1, 2006. A Notice of Abandonment was mailed on June 21, 2006.

Petitioner contends the final Office action was never received.

A petition to withdraw the holding of abandonment based on non-receipt of a Notice must prove that the Notice was not received at the address of record. If an Office action is not received due to a failure by an applicant to properly change the address of record, then the holding of abandonment will not be withdrawn.

A grantable petition under 37 CFR 1.137(b) must be accompanied by the required reply. The examiner has reviewed the amendment filed with the petition and determined the petition is not a proper reply to the final Office action mailed November 28, 2005. The examiner has determined the newly claimed subject matter contains issues neither considered nor addressed previously and therefore would require an additional search and further consideration. For example, the added language of etched on a flexible substrate, permanently fixed, closed loop and a multifilar helix (in various embodiments in some independent claims) was neither addressed nor considered at the time the Office mailed the final Office action.

A proper reply must be filed in order for the application to be revived. Petitioner may wish to file a Request for Continued Examination (RCE).

There is no indication that the person signing the instant petition was ever given a power of attorney or authorization of agent to prosecute the above-identified application. If the person signing the instant petition desires to receive future correspondence regarding this application, the appropriate power of attorney or authorization of agent must be submitted along with a request to change the address of record. While a courtesy copy of this decision is being mailed to the person signing the instant petition, all future correspondence will be directed solely to the address currently of record until such time as appropriate instructions are received to the contrary.

Any request for reconsideration must be submitted within TWO (2) MONTHS from the mail date of this decision. No further petition fee is required for the request. Extensions of time under 37 CFR 1.136(a) are permitted. The reconsideration request should include a cover letter entitled "Renewed Petition under 37 CFR 1.137(b)."

Further correspondence with respect to this matter should be addressed as follows:

By mail: Mail Stop Petition
Commissioner for Patents
P.O. Box 1450
Alexandria, VA 22313-1450

By facsimile: (571) 273-8300
Attn: Office of Petitions

By hand: U.S. Patent and Trademark Office
Customer Service Window
Randolph Building
401 Dulany Street
Alexandria, VA 22314

Telephone inquiries regarding this communication should be directed to Petitions Attorney Steven Brantley at (571) 272-3203.

Charles Steven Brantley
Senior Petitions Attorney
Office of Petitions

UNITED STATES PATENT AND TRADEMARK OFFICE

Commissioner for Patents
United States Patent and Trademark Office
P.O. Box 1450
Alexandria, VA 22313-1450
www.uspto.gov

AKERMAN SENTERFITT
P.O. BOX 3188
WEST PALM BEACH, FL 33402-3188

COPY MAILED

APR 26 2007

OFFICE OF PETITIONS

In re Application of Petros :
Application No. 10/709,511 :
Filing Date: May 11, 2004 :
Attorney Docket No. 7945-1 :
For: Antenna With Parasitic Wings :

Decision on Petition

This is a decision in response to the papers filed April 10, 2007, which are being treated in part as a renewed petition under 37 CFR 1.181 and 37 CFR 1.137(b).

The petition under 37 CFR 1.181 is **dismissed.**

The petition under 37 CFR 1.137(b) is **granted**.

The above-identified application became abandoned for failure to reply in a timely manner to the final Office action mailed November 28, 2005, which set a shortened statutory period for reply of three (3) months. An extension of time under the provisions of 37 CFR 1.136(a) was not obtained. Accordingly, the above-identified application became abandoned on March 1, 2006. A Notice of Abandonment was mailed on June 21, 2006.

The petition under 37 CFR 1.181:

The prior petition stated the final Office action was never received. The petition was not granted because the failure to receive the Office action appeared to be the result of a failure by applicant to properly and timely change the address of record. Since the papers filed April 10, 2007, do not establish a request to change the address was timely filed, the petition under 37 CFR 1.181 cannot be granted.

The petition under 37 CFR 1.137(b):

The instant petition requests revival of the application.

Petitioner has met the requirements to revive the above-identified application pursuant to 37 CFR 1.137(b). Therefore, the petition is granted and the application is revived.

Technology Center Art Unit 2828 will be informed of the instant decision and the examiner will consider the merits of the RCE filed April 10, 2007, and the amendment filed October 9, 2006, in due course.

Telephone inquiries regarding this communication should be directed to Petitions Attorney Steven Brantley at (571) 272-3203.

Charles Steven Brantley
Senior Petitions Attorney
Office of Petitions

UNITED STATES PATENT AND TRADEMARK OFFICE

Commissioner for Patents
United States Patent and Trademark Office
P.O. Box 1450
Alexandria, VA 22313-1450
www.uspto.gov

SUTHERLAND ASBILL & BRENNAN LLP
999 PEACHTREE STREET, N.E.
ATLANTA GA 30309

COPY MAILED

JAN 11 2007

OFFICE OF PETITIONS

In re Application of :
Richard C. Wiffen et al :
Application No. 10/709,543 : DECISION GRANTING PETITION
Filed: May 12, 2004 : UNDER 37 CFR 1.137(b)
Attorney Docket No. 19441-0069 :

This is a decision on the petition under 37 CFR 1.137(b), filed August 31, 2006, to revive the above-identified application.

The petition is **GRANTED**.

The petition satisfies the conditions for revival pursuant to the provisions of 37 CFR 1.137(b) in that (1) the reply in the form of corrected drawings (2) the petition fee; and (3) the required statement of unintentional delay have been received. Accordingly, the reply to the Notice of Allowability of February 22, 2006, is accepted as having been unintentionally delayed.

Telephone inquiries concerning this decision should be directed to the undersigned at (571) 272-3208.

This matter is being referred to the Office of Patent Publication and for review of the drawings submitted on August 31, 2006.

Karen Creasy

Karen Creasy
Petitions Examiner
Office of Petitions

UNITED STATES PATENT AND TRADEMARK OFFICE

Pet. Dec.

Commissioner for Patents
United States Patent and Trademark Office
P.O. Box 1450
Alexandria, VA 22313-1450
www.uspto.gov

JUL 21 2004

DCM

In re Application of Samii, Garrin et al. Serial Number: 10/709,545 Filed: May 12, 2004 For: SHUTDOWN SEPARATORS WITH IMPROVED PROPERTIES	PETITION UNDER M.P.E.P.708.02 V AND VI

This is in response to the petition filed May 19, 2004, requesting that the above-identified application be granted Special Status under Sections 708.02 V and VI of the MPEP and 37 CFR 1.102(c) **(no fee required)**.

The request for Special Status considered under Section 708.02 V and VI is granted because criteria under 37 CFR 1.102(c) has been met.

Accordingly the petition is **GRANTED.**

Marian C. Knode

Marian C. Knode, Special Programs Examiner
Technology Center 1700
Chemical and Materials Engineering

WHITE & FUDALA
57 BEDFORD STREET
SUITE 103
LEXINGTON MA 02420

Copied from 10709454 on 08/10/2004

UNITED STATES PATENT AND TRADEMARK OFFICE

SEP 21 2004

Commissioner for Patents
United States Patent and Trademark Office
P.O. Box 1450
Alexandria, VA 22313-1450
www.uspto.gov

In re Application of :
James M. Meyer *et al* : DECISION ON PETITION
Application No. 10/709,571 :
Filed: May 14, 2004 :
For: Venturi Induction For
Internal Combustion Engines

This is a decision on the petition to make special filed on July 23, 2004. The petition is based upon the practice described in MPEP § 708.02(VI) "Energy." Therefore, no petition fee is required.

The petition is dismissed.

The petition to make special based upon the practice in the above mentioned MPEP sections is not deemed to satisfy all of the requirements thereof. Specifically, while there is an allegation that the disclosed and claimed invention contributes to the reduction of energy consumption, there is no data presented in the petition or disclosed in the application from which one may conclude that the claimed invention "materially" contributes to the reduction of energy consumption.

Petitioners are reminded that the period for filing a reply to the outstanding Office action will not be stayed by the filing of a renewed petition. See 37 CFR 1.181(f).

PETITION DISMISSED.

Stephen Marcus, Special Program Examiner,
Technology Center 3700

Aspen Engineering Services, LLC
8425 Doubleheader Ranch Road
Morrison, CO 80465

UNITED STATES PATENT AND TRADEMARK OFFICE

Commissioner for Patents
United States Patent and Trademark Office
P.O. Box 1450
Alexandria, VA 22313-1450
www.uspto.gov

DOWNS RACHLIN MARTIN, PLLC
199 MAIN STREET
P O BOX 190
BURLINGTON VT 05402-0190

COPY MAILED

AUG 2 4 2004

OFFICE OF PETITIONS

In re Application of :
Paul A. Manfredi :
Application No. 10/709,574 : DECISION GRANTING PETITION
Filed: May 14, 2004 : UNDER 37 CFR 1.47(b)
For: APPARATUS AND METHOD FOR :
CLEANING ELECTRONIC ARTICLES :

This is in response to the "Petition Under 37 CFR 1.47(b)," filed May 14, 2004.

The petition is granted.

Petitioner has shown that the non-signing inventor has refused to join in the filing of the above-identified application after having been presented with the application papers. Specifically, the statement of facts by Anthony J. Canale establishes that the inventor was presented with the application papers, including the specification, claims and drawings, but refuses the request to sign the declaration. In addition, petitioner has shown that International Business Machines (IBM) has a proprietary interest in the above-identified application with the copy of the "Employee Confidential Information and Invention Agreement" showing that the inventor had an obligation to assign any patent rights to IBM. The petition fee will be charged to petitioner's deposit account no. 09-0456. Lastly, petitioner has submitted a declaration in compliance with 37 CFR 1.63 and 1.64 and demonstrated that petitioner has shown that such action is necessary to prevent irreparable damage.

This application and papers have been reviewed and found in compliance with 37 CFR 1.47(b). This application is hereby accorded Rule 1.47(b) status.

As provided in Rule 1.47(b), this Office will forward notice of this application's filing to the non-signing inventor at the

address given in the Declaration. Notice of the filing of this application will also be published in the Official Gazette.

After this decision is mailed, petitioner's deposit account No. 09-0456, will be charged the required $130 petition fee.

Thereafter, the above-identified application will be forwarded to the Office of Initial Patent Examination for further processing.

Telephone inquiries regarding this communication should be directed to the undersigned at (703)306-9200.

Edward J. Tannouse
Petitions Attorney
Office of Petitions
United States Patent and Trademark Office

UNITED STATES PATENT AND TRADEMARK OFFICE

Commissioner for Patents
United States Patent and Trademark Office
P.O. Box 1450
Alexandria, VA 22313-1450
www.uspto.gov

PAUL A. MANFREDI
382 TWIN PEAKS ROAD
WATERBURY CENTER, VT 05677

COPY MAILED

AUG 2 4 2004

OFFICE OF PETITIONS

In re Application of
Paul A. Manfredi
Application No. 10/709,574
Filed: May 14, 2004
For: APPARATUS AND METHOD FOR CLEANING ELECTRONIC ARTICLES

Dear PAUL A. MANFREDI:

You are named as the sole inventor in the above identified United States patent application, filed under the provisions of 35 U.S.C. 118 (United States Code), and 37 CFR 1.47(b), Rules of Practice in Patent Cases. Should a patent be granted on the application you will be designated therein as the sole inventor.

As a named inventor you are entitled to inspect any paper in the file wrapper of the application, order copies of all or any part thereof (at a prepaid cost per 37 CFR 1.19) or make your position of record in the application. Alternatively, you may arrange to do any of the preceding through a registered patent attorney or agent presenting written authorization from you. If you care to join the application, counsel of record (see below) would presumably assist you. Joining in the application would entail the filing of an appropriate oath or declaration by you pursuant to 37 CFR 1.63.

Telephone inquiries regarding this communication should be directed to the undersigned at (703)306-9200. Requests for information regarding your application should be directed to the File Information Unit at (703)308-2733. Information regarding how to pay for and order a copy of the application, or a specific paper in the application, should be directed to Certification Division at (703)308-9726 or 1(800)972-6382 (outside the Washington D.C. area).

Edward J. Tannouse
Petitions Attorney
Office of Petitions
United States Patent and Trademark Office

DOWNS RACHLIN MARTIN, PLLC
199 MAIN STREET
P O BOX 190
BURLINGTON VT 05402-0190

UNITED STATES PATENT AND TRADEMARK OFFICE

Commissioner for Patents
United States Patent and Trademark Office
P.O. Box 1450
Alexandria, VA 22313-1450
www.uspto.gov

FREDERICK W. GIBB, III
MCGINN & GIBB, PLLC
2568-A RIVA ROAD
SUITE 304
ANNAPOLIS, MD 21401

COPY MAILED

AUG 12 2004

OFFICE OF PETITIONS

In re Application of	:	
Paul A. Manfredi	:	
Application No. 10/709,575	:	DECISION GRANTING PETITION
Filed: May 14, 2004	:	UNDER 37 CFR 1.47(b)
For: PERMEABLE MEMBRANE CLEAN STATION	:	

This is in response to the "Petition Under 37 CFR 1.47(b)," filed May 14, 2004.

The petition is granted.

Petitioner has shown that the non-signing inventor has refused to join in the filing of the above-identified application after having been presented with the application papers. Specifically, the statement of facts by Anthony J. Canale establishes that the inventor was presented with the application papers, including the specification, claims and drawings, but refuses the request to sign the declaration. In addition, petitioner has shown that International Business Machines (IBM) has a proprietary interest in the above-identified application with the copy of the "Employee Confidential Information and Invention Agreement" showing that the inventor had an obligation to assign any patent rights to IBM. The petition fee will be charged to petitioner's deposit account no. 09-0456. Lastly, petitioner has submitted a declaration in compliance with 37 CFR 1.63 and 1.64 and demonstrated that petitioner has shown that such action is necessary to prevent irreparable damage.

This application and papers have been reviewed and found in compliance with 37 CFR 1.47(b). This application is hereby accorded Rule 1.47(b) status.

As provided in Rule 1.47(b), this Office will forward notice of this application's filing to the non-signing inventor at the

address given in the Declaration. Notice of the filing of this application will also be published in the Official Gazette.

After this decision is mailed, petitioner's deposit account No. 09-0456, will be charged the required $130 petition fee.

Thereafter, the above-identified application will be forwarded to the Office of Initial Patent Examination for further processing.

Telephone inquiries regarding this communication should be directed to the undersigned at (703)306-9200.

Edward J. Tannouse
Petitions Attorney
Office of Petitions
United States Patent and Trademark Office

UNITED STATES PATENT AND TRADEMARK OFFICE

Commissioner for Patents
United States Patent and Trademark Office
P.O. Box 1450
Alexandria, VA 22313-1450
www.uspto.gov

PAUL A. MANFREDI
382 TWIN PEAKS ROAD
WATERBURY CENTER, VT 05677

COPY MAILED

AUG 1 2 2004

OFFICE OF PETITIONS

In re Application of
Paul A. Manfredi
Application No. 10/709,575
Filed: May 14, 2004
For: PERMEABLE MEMBRANE CLEAN STATION

Dear PAUL A. MANFREDI:

You are named as the sole inventor in the above identified United States patent application, filed under the provisions of 35 U.S.C. 118 (United States Code), and 37 CFR 1.47(b), Rules of Practice in Patent Cases. Should a patent be granted on the application you will be designated therein as the sole inventor.

As a named inventor you are entitled to inspect any paper in the file wrapper of the application, order copies of all or any part thereof (at a prepaid cost per 37 CFR 1.19) or make your position of record in the application. Alternatively, you may arrange to do any of the preceding through a registered patent attorney or agent presenting written authorization from you. If you care to join the application, counsel of record (see below) would presumably assist you. Joining in the application would entail the filing of an appropriate oath or declaration by you pursuant to 37 CFR 1.63.

Telephone inquiries regarding this communication should be directed to the undersigned at (703)306-9200. Requests for information regarding your application should be directed to the File Information Unit at (703)308-2733. Information regarding how to pay for and order a copy of the application, or a specific paper in the application, should be directed to Certification Division at (703)308-9726 or 1(800)972-6382 (outside the Washington D.C. area).

Edward J. Tannouse
Petitions Attorney
Office of Petitions
United States Patent and Trademark Office

FREDERICK W. GIBB, III
MCGINN & GIBB, PLLC
2568-A RIVA ROAD
SUITE 304
ANNAPOLIS, MD 21401

UNITED STATES PATENT AND TRADEMARK OFFICE

Commissioner for Patents
United States Patent and Trademark Office
P.O. Box 1450
Alexandria, VA 22313-1450
www.uspto.gov

COPY MAILED

JUL 15 2008

OFFICE OF PETITIONS

BUCKINGHAM, DOOLITTLE & BURROUGHS, LLP
3800 EMBASSY PARKWAY
SUITE 300
AKRON OH 44333-8332

In re Application of :
Stevenson, et al :
Application No. 10/709,578 : ON PETITION
Filed: May 14, 2004 :
Attorney Docket No. **47399-0037** :

This is a decision on the petition under 37 CFR 1.78(a)(3), filed September 24, 2007, to accept an unintentionally delayed claim under 35 U.S.C §120 for the benefit of priority to the prior –filed non-provisional applications set forth in the amendment and Application Data Sheet (ADS) filed concurrently with the instant petition. The petition will also be treated as a petition under 37 CFR 1.78(a)(6) to accept the unintentionally delayed claim under 35 U.S.C 119(e) for the benefit of priority of the prior-filed provisional applications set forth in the amendment and ADS filed concurrently with the instant petition.

The petition under 37 CFR 1.78(a)(3) is **GRANTED**.

The petition under 37 CFR 1.78(a)(6) is also **GRANTED**

TREATMENT UNDER 37 CFR 1.78(a)(3)

A petition for acceptance of a claim for late priority under 37 CFR 1.78(a)(3) is only applicable to those applications filed on, or after, November 29, 2000. Further, the petition is appropriate only after the expiration of the period specified in 37 CFR 1.78(a)(2)(ii). In addition, the petition under 37 CFR 1.78(a)(3) must be accompanied by:

1. the reference required by 35 U.S.C § 120 and 37 CFR § 1.78(a)(2)(i) of the prior-filed application, unless previously submitted;

2. the surcharge set forth in § 1.17(t), and

3. a statement that the entire delay between the date the claim was due under 37 CFR 1.78(a)(2)(ii) and the date the claim was filed was unintentional. The Commissioner may require additional information where there is a question whether the delay was unintentional.

The instant pending application was filed on May 14, 2004, and was pending at the time of the filing of the instant petition. A reference to the prior-filed non-provisional applications has been included in an amendment to the first page of the specification, as required by 37 CFR 1.78(a)(2)(iii) and in an ADS.

The instant non-provisional application was filed after November 29, 2000, and the claim herein for the benefit of priority to the prior-filed application is submitted after the expiration of the period specified in 37 CFR 1.78(a)(2)(ii). Also, the reference to the prior filed applications was submitted during the pendency of the instant non-provisional application for which the claim for benefit of priority is sought. See 35 U.S.C. § 120. Accordingly, having found that the instant petition for acceptance of an unintentionally delayed claim for benefit of priority under 35 U.S.C. § 120 to the prior-filed non-provisional applications satisfies the conditions of 37 CFR 1.78(a)(3), the petition is granted.

TREATMENT UNDER 37 CFR 1.78(a)(6)

A petition for acceptance of a claim for late priority under 37 CFR 1.78(a)(6) is only applicable to those applications filed on, or after, November 29, 2000. Further, the petition is appropriate only after the expiration of the period specified in 37 CFR 1.78(a)(5)(ii). In addition, the petition under 37 CFR 1.78(a)(6) must be accompanied by:

1. the reference required by 35 USC 119(e) and paragraph (a)(5) of this section to the prior-filed provisional application, unless previously submitted.

2. the surcharge set forth in 1.17(t), and

3. a statement that the entire delay between the date the claim was due under paragraph (a)(5)(ii) of this section and the date the claim was filed was unintentional.

The instant pending application was filed on May 14, 2004, and was pending at the time of the filing of the instant petition. A reference to the prior-filed provisional applications has been included in an amendment to the first page of the specification, as required by 37 CFR 1.78(a)(5)(i) and in an ADS.

The instant nonprovisional application was filed after November 29, 2000, and the claim herein for the benefit of priority to the prior-filed provisional applications is submitted after the expiration of the period specified in 37 CFR 1.78(a)(5)(ii). Also, the reference to the prior filed applications was submitted during the pendency of the instant non-provisional application for which the claim for benefit of priority is sought. See 35 U.S.C. § 119(e). Accordingly, having found that the instant petition for acceptance of an unintentionally delayed claim for benefit of priority under 35 U.S.C. § 119(e) to the prior-filed provisional applications satisfies the conditions of 37 CFR 1.78(a)(6), the petition is granted.

It should be noted the ADS filed with the petition is defective since it is not labeled "Supplemental ADS". However, the amendment to the specification filed with the petition makes the defect irrelevant.

The granting of the petition to accept the delayed benefit claim to the prior-filed applications under 37 CFR 1.78(a)(3) and 37 CFR 1.78(a)(6) should not be construed as meaning the instant application is entitled to the benefit of the prior-filed applications. In order for the instant application to be entitled to the benefit of the prior-filed applications, all other requirements under 35 U.S.C. § 120 and 37 CFR 1.78(a)(1) and (a)(2) and 35 U.S.C. § 119(e) and 37 CFR 1.78(a)(4) and (a)(5) must be met. Similarly, the fact that the corrected Filing Receipt accompanying this decision

on petition includes the prior-filed application should not be construed as meaning that applicant is entitled to the claim for benefit of priority to the prior-filed applications noted thereon. Accordingly, the examiner will, in due course, consider this benefit claim and determine whether the instant application is entitled to the benefit of the earlier filing date.

A corrected Filing Receipt, which includes the priority claim to the prior-filed applications, accompanied this decision on petition.

Any inquiries concerning this decision may be directed to Kenya A. McLaughlin, Petitions Attorney, at (571)272-3222.

This matter is being referred to Technology Center 1700, Art Unit 1796 for further processing, including consideration by the examiner of applicant's entitlement to claim benefit of priority under 35 U.S.C. §§119(e) and 120 to the prior-filed non-provisional and provisional applications.

Anthony Knight
Supervisor
Office of Petitions

Enclosure: Corrected Filing Receipt

UNITED STATES PATENT AND TRADEMARK OFFICE

UNITED STATES DEPARTMENT OF COMMERCE
United States Patent and Trademark Office
Address: COMMISSIONER FOR PATENTS
P.O. Box 1450
Alexandria, Virginia 22313-1450
www.uspto.gov

APPLICATION NUMBER	FILING or 371(c) DATE	GRP ART UNIT	FIL FEE REC'D	ATTY.DOCKET.NO	TOT CLAIMS	IND CLAIMS
10/709,578	05/14/2004	1796	1264	47399-0037	26	4

CONFIRMATION NO. 3577

CORRECTED FILING RECEIPT

24115
BUCKINGHAM, DOOLITTLE & BURROUGHS, LLP
3800 EMBASSY PARKWAY
SUITE 300
AKRON, OH 44333-8332

Date Mailed: 06/19/2008

Receipt is acknowledged of this non-provisional patent application. The application will be taken up for examination in due course. Applicant will be notified as to the results of the examination. Any correspondence concerning the application must include the following identification information: the U.S. APPLICATION NUMBER, FILING DATE, NAME OF APPLICANT, and TITLE OF INVENTION. Fees transmitted by check or draft are subject to collection. Please verify the accuracy of the data presented on this receipt. **If an error is noted on this Filing Receipt, please submit a written request for a Filing Receipt Correction. Please provide a copy of this Filing Receipt with the changes noted thereon. If you received a "Notice to File Missing Parts" for this application, please submit any corrections to this Filing Receipt with your reply to the Notice. When the USPTO processes the reply to the Notice, the USPTO will generate another Filing Receipt incorporating the requested corrections**

Applicant(s)

Donald R. STEVENSON, Dover, OH;
Duong N. NGUYEN, Dover, OH;
Mark E. HARR, New Philadelphia, OH;
Michael R. JAKUPCA, Canton, OH;

Assignment For Published Patent Application

DOVER CHEMICAL CORPORATION, Dover, OH

Power of Attorney: The patent practitioners associated with Customer Number 24115

Domestic Priority data as claimed by applicant

This application is a CIP of 10/709,510 05/11/2004 PAT 7,320,764
which is a CIP of 10/086,619 03/01/2002 PAT 6,824,711
which claims benefit of 60/315,746 08/29/2001
and claims benefit of 60/314,181 08/16/2001
and claims benefit of 60/273,303 03/02/2001

Foreign Applications

If Required, Foreign Filing License Granted: 07/01/2004

The country code and number of your priority application, to be used for filing abroad under the Paris Convention, is **US 10/709,578**

Projected Publication Date: Not Applicable

Non-Publication Request: No

Early Publication Request: Yes

Title

PHENOL-FREE PHOSPHITES

Preliminary Class

524

PROTECTING YOUR INVENTION OUTSIDE THE UNITED STATES

Since the rights granted by a U.S. patent extend only throughout the territory of the United States and have no effect in a foreign country, an inventor who wishes patent protection in another country must apply for a patent in a specific country or in regional patent offices. Applicants may wish to consider the filing of an international application under the Patent Cooperation Treaty (PCT). An international (PCT) application generally has the same effect as a regular national patent application in each PCT-member country. The PCT process **simplifies** the filing of patent applications on the same invention in member countries, but **does not result** in a grant of "an international patent" and does not eliminate the need of applicants to file additional documents and fees in countries where patent protection is desired.

Almost every country has its own patent law, and a person desiring a patent in a particular country must make an application for patent in that country in accordance with its particular laws. Since the laws of many countries differ in various respects from the patent law of the United States, applicants are advised to seek guidance from specific foreign countries to ensure that patent rights are not lost prematurely.

Applicants also are advised that in the case of inventions made in the United States, the Director of the USPTO must issue a license before applicants can apply for a patent in a foreign country. The filing of a U.S. patent application serves as a request for a foreign filing license. The application's filing receipt contains further information and guidance as to the status of applicant's license for foreign filing.

Applicants may wish to consult the USPTO booklet, "General Information Concerning Patents" (specifically, the section entitled "Treaties and Foreign Patents") for more information on timeframes and deadlines for filing foreign patent applications. The guide is available either by contacting the USPTO Contact Center at 800-786-9199, or it can be viewed on the USPTO website at http://www.uspto.gov/web/offices/pac/doc/general/index.html.

For information on preventing theft of your intellectual property (patents, trademarks and copyrights), you may wish to consult the U.S. Government website, http://www.stopfakes.gov. Part of a Department of Commerce initiative, this website includes self-help "toolkits" giving innovators guidance on how to protect intellectual property in specific countries such as China, Korea and Mexico. For questions regarding patent enforcement issues, applicants may call the U.S. Government hotline at 1-866-999-HALT (1-866-999-4158).

LICENSE FOR FOREIGN FILING UNDER

Title 35, United States Code, Section 184

Title 37, Code of Federal Regulations, 5.11 & 5.15

GRANTED.

The applicant has been granted a license under 35 U.S.C. 184, if the phrase "IF REQUIRED, FOREIGN FILING LICENSE GRANTED" followed by a date appears on this form. Such licenses are issued in all applications where the conditions for issuance of a license have been met, regardless of whether or not a license may be required as

set forth in 37 CFR 5.15. The scope and limitations of this license are set forth in 37 CFR 5.15(a) unless an earlier license has been issued under 37 CFR 5.15(b). The license is subject to revocation upon written notification. The date indicated is the effective date of the license, unless an earlier license of similar scope has been granted under 37 CFR 5.13 or 5.14.

This license is to be retained by the licensee and may be used at any time on or after the effective date thereof unless it is revoked. This license is automatically transferred to any related applications(s) filed under 37 CFR 1.53(d). This license is not retroactive.

The grant of a license does not in any way lessen the responsibility of a licensee for the security of the subject matter as imposed by any Government contract or the provisions of existing laws relating to espionage and the national security or the export of technical data. Licensees should apprise themselves of current regulations especially with respect to certain countries, of other agencies, particularly the Office of Defense Trade Controls, Department of State (with respect to Arms, Munitions and Implements of War (22 CFR 121-128)); the Bureau of Industry and Security, Department of Commerce (15 CFR parts 730-774); the Office of Foreign AssetsControl, Department of Treasury (31 CFR Parts 500+) and the Department of Energy.

NOT GRANTED

No license under 35 U.S.C. 184 has been granted at this time, if the phrase "IF REQUIRED, FOREIGN FILING LICENSE GRANTED" DOES NOT appear on this form. Applicant may still petition for a license under 37 CFR 5.12, if a license is desired before the expiration of 6 months from the filing date of the application. If 6 months has lapsed from the filing date of this application and the licensee has not received any indication of a secrecy order under 35 U.S.C. 181, the licensee may foreign file the application pursuant to 37 CFR 5.15(b).

SPE RESPONSE FOR CERTIFICATE OF CORRECTION

Paper No.: _____

DATE : 3/11/09

TO SPE OF : ART UNIT 1796

SUBJECT : Request for Certificate of Correction for Appl. No.: 10709578 Patent No.: 7470735 B2

Please respond to this request for a certificate of correction within 7 days.

FOR IFW FILES:

Please review the requested changes/corrections as shown in the **COCIN** document(s) in the IFW application image. No new matter should be introduced, nor should the scope or meaning of the claims be changed.

Please complete the response (see below) and forward the completed response to scanning using document code **COCX**.

FOR PAPER FILES:

Please review the requested changes/corrections as shown in the attached certificate of correction. Please complete this form (see below) and forward it with the file to:

Certificates of Correction Branch (CofC)
South Tower - 9A22
Palm Location 7580
You can fax the Directors/SPE response to 571-270-9990

LAMONTE NEWSOME
Certificates of Correction Branch
703-308-9390 ext. 112

Thank You For Your Assistance

The request for issuing the above-identified correction(s) is hereby:
Note your decision on the appropriate box.

xApproved	**All** changes apply.
☐ **Approved in Part**	Specify below which changes **do not** apply.
☐ **Denied**	State the reasons for denial below.

Comments: _____

_____

_____

_____

_____

/Harold Pyon/

SPE RESPONSE FOR CERTIFICATE OF CORRECTION

SPE Harold Pyon Art Unit 1796

UNITED STATES PATENT AND TRADEMARK OFFICE

COMMISSIONER FOR PATENTS
UNITED STATES PATENT AND TRADEMARK OFFICE
P.O. BOX 1450
ALEXANDRIA, VA 22313-1450
www.uspto.gov

SEYFARTH SHAW, LLP
55 E. MONROE STREET
SUITE 4200
CHICAGO, IL 60603-5803

COPY MAILED

FEB 21 2006

OFFICE OF PETITIONS

In re Application of :
Mats Sandborn, et. al. :
Application No. 10/709,586 : ON PETITION
Filed: May 15, 2004 :
Attorney Docket No. 00173.0055.PCUS00 :

This is a decision on the petition under 37 CFR 1.137(b), filed on February 6, 2006, to revive the above-identified application.

The application became abandoned for failure to timely reply to the non-final Office action mailed February 9, 2005. A Notice of Abandonment was mailed August 17, 2005.

The petition satisfies the requirements of 37 CFR 1.137(b) in that petitioner has supplied (1) the reply in the form of an amendment, a specification, and three (3) sheets of Drawings containing Figures 1-4; (2) the petition fee of $1,500; and (3) an adequate statement of unintentional delay. Therefore, the petition is **GRANTED**.

The Office also acknowledges receipt of an Information Disclosure Statement (IDS) and an Oath/Declaration.

This application file is being referred to Technology Center Art Unit 3679, for review of the amendment filed with the instant petition.

Telephone inquiries concerning this decision should be directed to the undersigned at (571) 272-3226.

Andrea Smith
Petitions Examiner
Office of Petitions

UNITED STATES PATENT AND TRADEMARK OFFICE

COMMISSIONER FOR PATENTS
UNITED STATES PATENT AND TRADEMARK OFFICE
P.O. BOX 1450
ALEXANDRIA, VA 22313-1450
www.uspto.gov

NOVAK DRUCE & QUIGG, LLP
1300 EYE STREET, NW
400 EAST TOWER
WASHINGTON, DC 20005

COPY MAILED

FEB 21 2006

OFFICE OF PETITIONS

In re Application of	:	
Lennart Arvidsson	:	
Application No. 10/709,587	:	ON PETITION
Filed: May 15, 2004	:	
Attorney Docket No. 7589.166.PCUS00	:	

This is a decision on the petition under 37 CFR 1.137(b), filed January 3, 2006, to revive the above-identified application.

The application became abandoned for failure to timely reply to the non-final Office action mailed February 10, 2005. A Notice of Abandonment was mailed October 5, 2005.

The petition satisfies the requirements of 37 CFR 1.137(b) in that petitioner has supplied (1) the reply in the form of an amendment; (2) the petition fee of $1,500; and (3) an adequate statement of unintentional delay. Therefore, the petition is **GRANTED**.

The Office also acknowledges receipt of $700 in claim fees submitted with the petition on January 3, 2006.

This application file is being referred to Technology Center Art Unit 3661, for review of the amendment filed with the instant petition.

Telephone inquiries concerning this decision should be directed to the undersigned at (571) 272-3226.

Andrea Smith
Petitions Examiner
Office of Petitions

UNITED STATES PATENT AND TRADEMARK OFFICE

COMMISSIONER FOR PATENTS
UNITED STATES PATENT AND TRADEMARK OFFICE
P.O. BOX 1450
ALEXANDRIA, VA 22313-1450
www.uspto.gov

IPX CORPORATION
SUITE 1308
1108 6 AVE. SW
CALGARY, ALBERTA
CANADA

COPY MAILED

JUN 13 2006

OFFICE OF PETITIONS

In re Application of :
Regan :
Application No. 10/709,595 :
Filed: May 17, 2004 : ON PETITION
Attorney Docket No. N/A :
For: INDUCTION HEATING APPARATUS FOR CONTROLLING THE WELDING PARAMETER OF TEMPERATURE FOR HEAT TREATING A SECTION OF PIPING

This is a decision on the petition under 37 CFR 1.137(b), filed April 20, 2006, to revive the above-identified application. Petitioner requests a refund of the petition fee because the September 7, 2005 non-final Office action was not received by applicant. This request will be treated under 37 CFR 1.181.

The petition under 37 CFR 1.137(b) is **DISMISSED**.

The constructive petition under 37 CFR 1.181 is **DISMISSED**.

Any further petition to revive the above-identified application must be submitted within TWO (2) MONTHS from the mail date of this decision. Extensions of time under 37 CFR 1.136(a) are permitted. This is **not** final agency action within the meaning of 5 U.S.C. § 704. There is no need to submit another petition fee.

The petitions are dismissed and the merits of the petitions will not be addressed because the correspondence is not signed by a proper party.

37 CFR 1.33(b) states that any amendments and other papers filed in an application must be signed by (1) an appointed registered attorney or agent; (2) a registered attorney or agent not appointed, but acting in a representative capacity, (3) an assignee under 3.71(b); or (4) all of the named inventors.

The petition is signed by Paul A. Taylor. Paul A. Taylor has not provided an attorney/agent registration number. Paul A. Taylor has not shown that he is an authorized representative of an assignee who has right to take action. Paul A. Taylor is not the inventor.

In short, Paul A. Taylor has not established that he is permitted to file amendments and other papers in this application.

In any reconsideration petition, petitioner is encouraged to either (a) submit Paul A. Taylor's registration number; (b) submit an appropriate 3.73(b) statement on behalf of the assignee establishing ownership of the invention, signed by a person authorized to act on behalf of the assignee (the person authorized to act on behalf of the assignee should be Paul A. Taylor and in this manner, the signature on instant petition will be ratified); or (c) submit another copy of the petition signed by the inventor.

The change of correspondence address filed on April 20, 2006 is not acceptable, either, because Paul A. Taylor is not a proper party. However, since the former address of record is not valid, this decision will be mailed to the address listed on the petition. The change in correspondence address filed on April 20, 2006 will **not** be entered into Office databases.

Further correspondence with respect to this matter should be addressed as follows:

By mail:
Mail Stop PETITION
Commissioner for Patents
Post Office Box 1450
Alexandria, VA 22313-1450

By hand:
U.S. Patent and Trademark Office
Customer Service Window, Mail Stop Petition
Randolph Building
401 Dulany Street
Alexandria, VA 22314

By FAX: (571) 273-8300 - ATTN: Office of Petitions

Telephone inquiries may be directed to the undersigned at (571) 272-3230.

Shirene Willis Brantley
Senior Petitions Attorney
Office of Petitions

UNITED STATES PATENT AND TRADEMARK OFFICE

Commissioner for Patents
United States Patent and Trademark Office
P.O. Box 1450
Alexandria, VA 22313-1450
www.uspto.gov

WILLIAM J BUNDREN
THE LAW OFFICE OF WILLIAM J BUNDREN
734 LaRue Road
Millersville MD 21108

COPY MAILED

JAN 0 3 2007

OFFICE OF PETITIONS

In re Application of :
Regan :
Application No. 10/709,595 : ON PETITION
Filed: May 17, 2004 :
Attorney Docket No. 655947-1 :
For: INDUCTION HEATING APPARATUS FOR CONTROLLING THE WELDING PARAMETER OF TEMPERATURE FOR HEAT TREATING A SECTION OF PIPING

This is a decision on the petition, filed November 12, 2006, under 37 CFR 1.137(b) to revive the above-identified application.

The above-identified application became abandoned for failure to timely submit a reply within three (3) months of the mailing of the September 7, 2005 non-final Office action. No response being received and no extensions of time being obtained, this application became abandoned on December 8, 2005. A Notice of Abandonment was mailed on March 17, 2006.

Applicant has submitted an amendment in reply to the September 7, 2005 non-final Office action, an acceptable statement of the unintentional nature of the delay in responding to the September 7, 2005 non-final Office action, and the petition fee.

The statement of unintentional delay was not signed by a person who would have been in a position of knowing that the delay in filing a timely response was unintentional. In the event that practitioner has no knowledge that the delay was in fact unintentional, practitioner should make a reasonable inquiry to ascertain that, in fact, the delay was unintentional. If practitioner discovers that the delay was intentional, practitioner must so notify the Office.

The Power of Attorney and Correspondence Address Indication Form submitted on November 12, 2006 has been entered and made of record. All future correspondence regarding this application will be mailed to the new correspondence address of record.

The petition is **GRANTED**.

After the mailing of this decision the application will be forwarded to Technology Center AU 3742 for consideration of the amendment filed on November 12, 2006.

Telephone inquiries should be directed to the undersigned at (571) 272-3230.

Shirene Willis Brantley

Shirene Willis Brantley
Senior Petitions Attorney
Office of Petitions
Office of the Deputy Commissioner
for Patent Examination Policy

UNITED STATES PATENT AND TRADEMARK OFFICE

Commissioner for Patents
United States Patent and Trademark Office
P.O. Box 1450
Alexandria, VA 22313-1450
www.uspto.gov

SEP 17 2004

MAILED
SEP 17 2004
OFFICE OF THE DIRECTOR
TC 3600

ZIOLKOWSKI PATENT SOLUTIONS GROUP, LLC (ZPS)
14135 North Cedarburg Road
Mequon, WI 53097

In re application of : **DECISION ON PETITION**
Uta Nauert : **TO MAKE SPECIAL**
Application No. 10/709,597 : **(APPLICANT'S AGE)**
Filed: May 17, 2004 :
For: COLLAPSIBLE SHADE FOR FEEDER ASSEMBLY

This is a decision on the petition submitted on May 21, 2004 under 37 CFR 1.102 (c) to make the above-identified application special under the accelerated examination procedure set forth in MPEP 708.02, Section IV: Applicant's Age.

The petition is **GRANTED**.

An application may be accorded special status upon the filing of a petition providing evidence showing that the applicant is at least 65 years old. Such a showing may be provided by evidence such as a birth certificate or a statement from the applicant.

The evidence submitted with the petition is a signed declaration for Mr. Nauert indicating that he is at least 65 years of age.

The examiner is directed (1) to make an interference search for possible interfering applications, (2) to promptly examine this application out of turn, and (3) if any interfering application is discovered, to examine such application simultaneously and state in the first official letter of such application that it is being taken out of turn because of a possible interference.

Petitioner is advised that this application will continue to be special, throughout its entire prosecution and pendency, including interference or appeal, if any, only if petitioner makes a prompt ***bona fide*** effort, in response to each Office action, to place the application in condition for allowance, even if it is necessary to conduct an interview with the examiner to accomplish this purpose.

SUMMARY: Petition to Make Special **GRANTED**.

Steven N. Meyers
Special Programs Examiner
Patent Technology Center 3600
(703) 308-3868

SNM/pav: 9/13/04

UNITED STATES PATENT AND TRADEMARK OFFICE

Commissioner for Patents
United States Patent and Trademark Office
P.O. Box 1450
Alexandria, VA 22313-1450
www.uspto.gov

JIANQ CHYUN INTELLECTUAL PROPERTY OFFICE
7 FLOOR-1, NO. 100
ROOSEVELT ROAD, SECTION 2
TAIPEI 100 TAIWAN

COPY MAILED

JUN 30 2008

OFFICE OF PETITIONS

In re Application of :
WANG et al. :
Application No. 10/709,605 : DECISION ON PETITION
Filed: 05/18/2004 :
Attorney Docket No. 12445-US-PA :

This is a decision on the petition under 37 CFR 1.181 (no fee), filed March 21, 2008, requesting withdrawal of the holding of abandonment in the above-identified application. This is also a decision on the petition under 37 CFR 1.137(b), filed March 11, 2008, to revive the application.

The petition under 37 CFR 1.181 is **granted**.

The petition under 37 CFR 1.137(b) is **dismissed as moot**.

This application was held abandoned for failure to reply to the Restriction Requirement of August 2, 2007, which set a shortened statutory period for reply of one month or thirty days, whichever was longer. A Notice of Abandonment was mailed on February 26, 2008.

Petitioner asserts that the Restriction Requirement dated August 2, 2007, was not received.

Upon further review, it appears that there was an irregularity in the email notification of the Restriction Requirement of August 2, 2007. Therefore, it is concluded that petitioner did not receive timely and proper notification of the outstanding Restriction Requirement. The Notice of Abandonment mailed February 26, 2008, is hereby vacated and the holding of abandonment withdrawn. The Office acknowledges receipt of the reply to the Restriction Requirement.

This application is being referred to the Technology Center 2622 for further action on the reply submitted March 21, 2008.

Telephone inquiries regarding this decision may be directed to the undersigned at (571) 272-3211.

Christina Tartera Donnell

Christina Tartera Donnell
Senior Petitions Attorney
Office of Petitions

Office of Petitions: Decision Count Sheet

Mailing Month: 6

Office of Petitions Internal Document (version: 4.26.6)

Application No.: 10709605

10709605

For US serial numbers: enter number only, no slashes or commas. Ex: 10123456

For PCT: enter "51+single digit of year of filing+last 5 numbers", Ex. for PCT/US05/12345, enter 51512345

Deciding Official: DONNELL, CHRISTINA

COPY MAILED

JUN 30 2008

OFFICE OF PETITIONS

Count (1) - Palm Credit 10/709,605

Decision Type: 525 - 37 CFR 1.181 for W/D HOLDING OF ABANDONMENT

Decision: GRANT

Time Period for Reply: n/a

Notes: Please enter 525 petition filed 03/21/08

Count (2)

Decision Type: 502 - 37 CFR 1.137(b) - REVIVAL BASED ON UNINTENTIONAL DELAY IN ABN APPL

Decision: DISMISSED

Time Period for Reply: n/a

Notes:

Count (3)

Decision Type: NONE

Decision: n/a

Time Period for Reply: n/a

Notes:

if more than 3 decisions, attach 2nd count sheet & mark this box ☐

_____ Initials of Approving Official (if required)

Printed on: *6/26/2008*

UNITED STATES PATENT AND TRADEMARK OFFICE

Commissioner for Patents
United States Patent and Trademark Office
P.O. Box 1450
Alexandria, VA 22313-1450
www.uspto.gov

MAILED FROM
DIRECTORS OFFICE

AUG - 1 2006

072706

TECHNOLOGY CENTER 2800

Khoi Nguyen
Schmeiser, Olsen & Watts
22 Century Hill Drive
Suite 302
Latham, NY 12110

In re Application of:
Mark D. Dupuis et al.
Serial No.: 10/709,644
Filed: May 19, 2004
Attorney Docket No.: BUR920040106US1
Title: YIELD IMPROVEMENT IN SILICON-GERMANIUM EPITAXIAL GROWTH

DECISION ON PETITION
TO WITHDRAW HOLDING
OF ABANDONMENT

This is a decision, *sua sponte*, withdrawing the holding of abandonment of the above-identified application.

A Non-Final Office action was mailed on December 13, 2005 and subsequently remailed on December 28, 2005 to the applicant. In the apparent absence of a reply, a Notice of Abandonment was mailed on July 13, 2006.

Although no petition or request to withdraw the holding of abandonment in this application has been filed, the Notice of Abandonment is hereby vacated and the holding of abandonment is withdrawn in view of the fact that the December 13 and 28, 2006 Office Actions were mailed to the applicant's old address namely, 3 Lear Jet Lane, Suite 201, Latham NY 12110. The applicant having received the Notice of Abandonment on July 13, 2006 notified the examiner that they did not receive the December 13 or 28, 2005 amendments. Consequently, the application is not abandoned in fact.

The Office Action will be remailed with the date for response restarted.

Any inquiry regarding this decision should be directed to Hien H. Phan, Special Program Examiner, at (703) 308-7502.

Robert Oberleitner, Group Director
Technology Center 2800
Semiconductors, Electrical and Optical
Systems and Components
Electrical & Optical Systems & Components

UNITED STATES PATENT AND TRADEMARK OFFICE

Commissioner for Patents
United States Patent and Trademark Office
P.O. Box 1450
Alexandria, VA 22313-1450
www.uspto.gov

ZORC PRODUCTIONS, INC.
3020 EAST 3RD #4
LONG BEACH CA 90814

COPY MAILED
JUN 2 2 2006
OFFICE OF PETITIONS

In re Application of :
Hufford, et al. :
Application No. 10/709,645 : ON PETITION
Filed: May 19, 2004 :
Attorney Docket No. N/A :
For: CLEAR LUCITE CUTTING TOOL

This is a decision on the petition, filed November 9, 2005, under 37 CFR 1.137(b) to revive the above-identified application.

The petition is **dismissed** and the merits of the petition will not be addressed because the petition is not signed by a proper party. No additional petition fee will be due when petitioners file a reconsideration petition.

37 CFR 1.33(b) states that any amendments and other papers filed in an application must be signed by (1) an appointed registered attorney or agent; (2) a registered attorney or agent not appointed, but acting in a representative capacity, (3) an assignee under 3.71(b); or (4) all of the named inventors.

The petition is signed by Kyle N. Hufford. Kyle N. Hufford has not provided an attorney registration number and a review of Office records does not reveal that a person named Kyle N. Hufford has been assigned a registration number. Kyle N. Hufford has not shown that he is an authorized representative of an assignee who has right to take action.

In short, Kyle N. Hufford has not established that he is permitted to file amendments and other papers in this application on his own. It is noted that he is one of three joint inventors.

In any reconsideration petition, applicants are encouraged to file a reconsideration petition selecting **one** of the following courses of action: Either (a) submit Kyle N. Hufford's registration number; (b) submit an appropriate 3.73(b) statement on behalf of the assignee (if there is one) establishing ownership of the invention signed by a person authorized to act on behalf of the assignee (the person authorized to act on behalf of the assignee should be Kyle N. Hufford and in this manner, the signature on instant petition will be ratified); or (c) submit another copy of the petition signed by all three inventors.

Further correspondence with respect to this matter should be addressed as follows:

By mail: Mail Stop PETITION
Commissioner for Patents
Post Office Box 1450
Alexandria, VA 22313-1450

By hand: U.S. Patent and Trademark Office
Customer Service Window, Mail Stop Petition
Randolph Building
401 Dulany Street
Alexandria, VA 22314

By FAX: (571) 273-8300 – ATTN: Office of Petitions

Telephone inquiries concerning this decision should be directed to the undersigned at (571) 272-3230.

Shirene Willis Brantley

Shirene Willis Brantley
Senior Petitions Attorney
Office of Petitions

UNITED STATES PATENT AND TRADEMARK OFFICE

Commissioner for Patents
United States Patent and Trademark Office
P.O. Box 1450
Alexandria, VA 22313-1450
www.uspto.gov

ZORC PRODUCTIONS, INC.
3020 EAST 3RD #4
LONG BEACH CA 90814

COPY MAILED

OCT 19 2006

OFFICE OF PETITIONS

In re Application of :
Hufford, et al. :
Application No. 10/709,645 : ON PETITION
Filed: May 19, 2004 :
Attorney Docket No. N/A :
For: CLEAR LUCITE CUTTING TOOL

This is a decision on the petition, filed July 20, 2006, under 37 CFR 1.137(b) to revive the above-identified application.

The petition is **dismissed**

Any request for reconsideration of this decision must be submitted within TWO (2) MONTHS from the mail date of this decision. Extensions of time under 37 CFR 1.136(a) are permitted. The reconsideration request should include a cover letter entitled "Renewed Petition under 37 CFR 1.137(b)." Petitioner is advised that this is not a final agency decision.

This application became abandoned for failure to timely reply to the Notice to File Missing Parts of Nonrovisional Application, mailed July 6, 2004, which set an extendable two month period for reply. No extensions of time being obtained and no reply being filed, the application became abandoned on September 7, 2004. A Notice of Abandonment was mailed on March 9, 2005.

A grantable petition pursuant to 37 CFR 1.137(b) must be accompanied by:

(1) the required reply, unless previously filed.;

(2) the petition fee as set forth in 37 CFR 1.17(m);

(3) a statement that the **entire** delay in filing the required reply from the due date for the reply until the filing of a grantable petition pursuant to 37 CFR 1.137(b) was unintentional. The Director may require additional information where there is a question whether the delay was unintentional; and

(4) any terminal disclaimer (and fee set forth in 37 CFR 1.20(d)) required pursuant to 37 CFR 1.137(d).

The instant petition does not satisfy requirement (1) above.

Petitioners have not submitted the $65.00 late declaration surcharge that was required by the July 6, 2004 Notice.

Further correspondence with respect to this matter should be addressed as follows:

By mail: Mail Stop PETITION
Commissioner for Patents
Post Office Box 1450
Alexandria, VA 22313-1450

By hand: U.S. Patent and Trademark Office
Customer Service Window, Mail Stop Petition
Randolph Building
401 Dulany Street
Alexandria, VA 22314

By FAX: (571) 273-8300 – ATTN: Office of Petitions

Telephone inquiries concerning this decision should be directed to the undersigned at (571) 272-3230.

Shirene Willis Brantley

Shirene Willis Brantley
Senior Petitions Attorney
Office of Petitions

UNITED STATES PATENT AND TRADEMARK OFFICE

Commissioner for Patents
United States Patent and Trademark Office
P.O. Box 1450
Alexandria, VA 22313-1450
www.uspto.gov

Kyle Hufford/ZORC PRODUCTIONS, INC.
4835 E. Anaheim St.
#216
LONG BEACH CA 90804

COPY MAILED

NOV 0 5 2008

OFFICE OF PETITIONS

In re Application of
Hufford, et al.
Application No. 10/709,645
Filed: May 19, 2004
Attorney Docket No. N/A
For: CLEAR LUCITE CUTTING TOOL

ON PETITION

This is a decision on the reconsideration petition, filed October 23, 2008, under 37 CFR 1.137(b) to revive the above-identified application.

The petition is **granted.**

This application became abandoned for failure to timely reply to the Notice to File Missing Parts of Nonrovisional Application, mailed July 6, 2004, which set an extendable two month period for reply. No extensions of time being obtained and no reply being filed, the application became abandoned on September 7, 2004. A Notice of Abandonment was mailed on March 9, 2005.

Applicants have submitted a proper reply to the July 6, 2004 Notice in the form of an executed declaration and surcharge, an acceptable statement of the unintentional nature of the delay in responding to the July 6, 2004 Notice, and the petition fee. Accordingly, the petition under 37 CFR 1.137(b) is granted.

After the mailing of this decision, the file will be returned to the Office of Patent Application Processing for further pre-examination processing.

Telephone inquiries concerning this matter may be directed to the undersigned at (571) 272-3230.

Shirene Willis Brantley

Shirene Willis Brantley
Senior Petitions Attorney
Office of Petitions

UNITED STATES PATENT AND TRADEMARK OFFICE

Commissioner for Patents
United States Patent and Trademark Office
P.O. Box 1450
Alexandria, VA 22313-1450
www.uspto.gov

MCGARRY BAIR PC
171 MONROE AVENUE, N.W.
SUITE 600
GRAND RAPIDS MI 49503

COPY MAILED

MAR 0 3 2006

OFFICE OF PETITIONS

In re Application of	:	
Silvers, David	:	DECISION ON PETITION
Application No. 10/709,648	:	TO MAKE SPECIAL
Filed: May 19, 2004	:	37 CFR1.102(D)
Attorney Docket No. 71568-0007	:	

This is a decision on the petition under 37 CFR §1.102(d), filed February 14, 2006, to make the above-identified application special based on actual infringement as set forth in M.P.E.P. § 708.02, Section II.

The petition is **DISMISSED.**

A grantable petition to make an application special under 37 CFR §1.102(d) and MPEP §708.02, Section II: Infringement, must be accompanied by the required fee pursuant to 37 CFR 1.17(h) and a statement by the applicant, assignee, or attorney/agent registered to practice before the office alleging:

> (A) That there is an infringing device or product actually on the market or method in use;
>
> (B) That a rigid comparison of the alleged infringing device, product, or method with the claims of the application has been made, and that, in his or her opinion, some of the claims are unquestionably infringed; and
>
> (C) That he or she has made or caused to be made a careful and thorough search of the prior art or has a good knowledge of the pertinent prior art.
>
> Applicant must provide one copy of each of the references deemed most closely related to the subject matter encompassed by the claims if said references are not already of record.

The instant petition fails to meet the requirements set forth above for special status because it lacks (A) and (B). Further, petitioner should rephrase the statements in the instant petition to include the proper statements. Specifically to (B), the statement "some of the claims are *unquestionally infringed*," should be included.

Further correspondence with respect to this matter should be addressed as follows:

By Mail: Mail Stop PETITION
Commissioner for Patents
P. O. Box 1450
Alexandria, VA 22313-1450

By hand: U. S. Patent and Trademark Office
Customer Service Window, Mail Stop Petitions
Randolph Building
401 Dulany Street
Alexandria, VA 22314

By FAX: (571) 273-8300

Telephone inquiries concerning this decision should be directed to Petitions Examiner Liana Chase at 571-272-3206.

All other inquiries concerning either the examination or status of the application should be directed to the Technology Center.

This matter is being referred to the Technology Center Art Unit 2635 for action in its regular turn.

David Bucci
Petitions Examiner
Office of Petitions

UNITED STATES PATENT AND TRADEMARK OFFICE

Commissioner for Patents
United States Patent and Trademark Office
P.O. Box 1450
Alexandria, VA 22313-1450
www.uspto.gov

MCGARRY BAIR PC
171 MONROE AVENUE, N.W.
SUITE 600
GRAND RAPIDS MI 49503

COPY MAILED

APR 0 5 2006

OFFICE OF PETITIONS

In re Application of	:	
Silvers, David	:	
Application No. 10/709,648	:	ON PETITION
Filed: May 19, 2004	:	
Attorney Docket No. 71568-0007	:	

This is a decision on the renewed petition under 37 CFR §1.102(d), filed March 17, 2006, to make the above-identified application special. The petition requests that the above-identified application be made special under the accelerated examination procedure set forth in M.P.E.P. § 708.02, Section II: Infringement.

The petition is **GRANTED.**

A grantable petition to make an application special under 37 CFR §1.102(d) and MPEP §708.02, Section II: Infringement, must be accompanied by the required fee pursuant to 37 CFR 1.17(h) and a statement by the applicant, assignee, or attorney/agent registered to practice before the office alleging:

(A) That there is an infringing device or product actually on the market or method in use;

(B) That a rigid comparison of the alleged infringing device, product, or method with the claims of the application has been made, and that, in his or her opinion, some of the claims are unquestionably infringed; and

(C) That he or she has made or caused to be made a careful and thorough search of the prior art or has a good knowledge of the pertinent prior art.

Applicant must provide one copy of each of the references deemed most closely related to the subject matter encompassed by the claims if said references are not already of record.

The petition complies with all the above stated requirements. Accordingly, the above-identified application has been accorded "special" status.

Telephone inquires concerning this decision should be directed to Petitions Examiner Liana Chase at (571) 272-3206. All other inquires concerning either the examination or status of the application should be directed to the Technology Center.

This matter is being referred to the Technology Center Art Unit 2635 for expedited prosecution.

David Bucci
Petitions Examiner
Office of Petitions

UNITED STATES PATENT AND TRADEMARK OFFICE

Commissioner for Patents
United States Patent and Trademark Office
P.O. Box 1450
Alexandria, VA 22313-1450
www.uspto.gov

KRAMER LEVIN NAFTALIS & FRANKEL LLP
INTELLECTUAL PROPERTY DEPARTMENT
1177 AVENUE OF THE AMERICAS
NEW YORK NY 10036

COPY MAILED

JUL 22 2008

OFFICE OF PETITIONS

In re Application of :
Danny C. RICH :
Application No. 10/709,659 : DECISION ON PETITION
Filed: May 20, 2004 :
Attorney Docket No. **58653/01180** :

This is a decision on the petition under the unintentional provisions of 37 CFR 1.137(b), filed May 14, 2008, to revive the above-identified application.

The petition is **GRANTED**.

This application became abandoned for failure to timely pay the issue and publication fees on or before May 07, 2008, as required by the Notice of Allowance and Fee(s) Due, mailed February 07, 2008. Accordingly, the date of abandonment of this application is May 08, 2008.

The petition satisfies the requirements of 37 CFR 1.137(b) in that petitioner has supplied (1) the reply in the form of payment of the issue fee of $1440 and the publication fee of $300, (2) the petition fee of $1540; and (3) a proper statement of unintentional delay. Accordingly, the Issue Fee and the Publication Fee are accepted as having been unintentionally delayed.

Telephone inquiries concerning this decision should be directed to Tredelle Jackson at (571) 272-2783.

This application is being referred to the Office of Data Management for processing into a patent.

David Bucci
Petitions Examiner
Office of Petitions

UNITED STATES PATENT AND TRADEMARK OFFICE

COMMISSIONER FOR PATENTS
UNITED STATES PATENT AND TRADEMARK OFFICE
P.O. BOX 1450
ALEXANDRIA, VA 22313-1450
WWW.USPTO.GOV

Paper No. None

COPY MAILED
MAY 10 2006
OFFICE OF PETITIONS

RICHARD D. FUERLE
1711 W. RIVER RD.
GRAND ISLAND NY 14072

In re Application of
Marianne M. Key-Cerniak et al.
Application No. 10/709,660
Filed: May 20, 2004
Attorney Docket Number: MK01
Title: SAFETY PANEL FOR HANDGUNS

DECISION ON PETITION
UNDER 37 C.F.R. §1.181

This is a decision on the petition filed March 13, 2006, pursuant to 37 C.F.R. §1.137(a), which is properly treated as a petition under 37 C.F.R. §1.181, requesting that the holding of abandonment in the above-identified application be withdrawn.

The petition fee will be refunded to Petitioner's Deposit Account in due course.

The above-identified application became abandoned for failure to reply within the meaning of 37 CFR §1.113 in a timely manner to the final Office action mailed April 27, 2005, which set a shortened statutory period for reply of three (3) months. An after-final amendment was received on July 11, 2005, and an advisory action was mailed on July 26, 2005. No extensions of time under the provisions of 37 CFR §1.136(a) were obtained, and no further responses were received. Accordingly, the above-identified application became abandoned on July 28, 2005. A notice of abandonment was mailed on December 13, 2005.

With the present petition, Petitioner has asserted that a Request for Continued Examination (RCE) was submitted on August 23, 2005 along with a one-month extension of time. Petitioner has submitted a copy of this submission, and it is noted that it contains a certificate of mailing dated August 23, 2005. Petitioner has further submitted a postcard receipt which evinces the receipt of an RCE on August 25, 2005. It is further noted that Office records reflect the receipt of both the fee associated with the filing of an RCE and a one-month extension of time on August 25, 2005.

Petitioner has requested that the holding of abandonment in the above-identified application be withdrawn. It is clear that a response was timely submitted. Considering the facts and circumstances of the delay at issue, as set forth on petition, it is concluded that Petitioner has met his burden of establishing that a submission was timely submitted.

Accordingly, the petition under 37 C.F.R. §1.181(a) is **GRANTED**. The holding of abandonment is **WITHDRAWN.**

The Technology Center will be notified of this decision, and the RCE originally submitted on August 25, 2005 will be processed.

Telephone inquiries regarding *this decision* should be directed to the undersigned at (571) 272-3225. All other inquiries concerning examination procedures or status of the application should be directed to the Technology Center.

Paul Shanoski
Senior Attorney
Office of Petitions
United States Patent and Trademark Office

UNITED STATES PATENT AND TRADEMARK OFFICE

UNITED STATES DEPARTMENT OF COMMERCE
United States Patent and Trademark Office
Address: COMMISSIONER FOR PATENTS
P.O. Box 1450
Alexandria, Virginia 22313-1450
www.uspto.gov

IBM MICROELECTRONICS
INTELLECTUAL PROPERTY LAW
1000 RIVER STREET
972 E
ESSEX JUNCTION, VT 05452

Mail Date: 04/20/2010

Applicant	: John S. Smyth	: DECISION ON REQUEST FOR
Patent Number	: 7660888	: RECALCULATION of PATENT
Issue Date	: 02/09/2010	: TERM ADJUSTMENT IN VIEW
Appliction No	: 10/709,671	: OF WYETH AND NOTICE OF INTENT TO
Filed	: 05/21/2004	: ISSUE CERTIFICATE OF CORRECTION
		:

The Request for Recalculation is **GRANTED** to the extent indicated.

The patent term adjustment has been determined to be **1250** days. The USPTO will *sua sponte* issue a certificate of correction reflecting the amount of PTA days determined by the recalculation.

Prior to the issuance of the certificate of correction, the USPTO will afford patentee an opportunity to be heard and request reconsideration. Accordingly, patentee has **one month or thirty (30) days**, whichever is longer, to file a request for reconsideration of this patent term adjustment calculation. See 35 U.S.C. 154(b)(3)(B)(ii) and 37 CFR 1.322(a)(4). No extensions of time will be granted under 37 CFR 1.136.

Patentee should use document code PET.OP if electronically filing a request for reconsideration of this patent term adjustment calculation. The patentee must also include the information required by 37 CFR 1.705(b)(2) and the fee required by 37 CFR 1.18(e). If patentee does not file a timely request for reconsideration of this patent term adjustment calculation including the information required by 37 CFR 1.705(b)(2) and the fee required by 37 CFR 1.18(e), the USPTO will issue a certificate of correction reflecting the PTA determination noted above.

Patentee should be aware that in order to preserve the right to review in the United States District Court for the District of Columbia of the USPTO patent term adjustment determination, patentee must ensure that he or she also take the steps required under 35 U.S.C. 154(b)(4)(A) in a timely manner. Nothing in the request for recalculation should be construed as providing an alternative time frame for commencing a civil action under 35 U.S.C. 154(b)(4)(A).

Any questions concerning this decision should be directed to the Office of Patent Legal Administration at 571-272-7702.

UNITED STATES PATENT AND TRADEMARK OFFICE

Commissioner for Patents
United States Patent and Trademark Office
P.O. Box 1450
Alexandria, VA 22313-1450
www.uspto.gov

WOOD HERRON & EVANS
2700 CAREW TOWER
441 VINE STREET
CINCINNATI, OH 45202

COPY MAILED

JUL 2 6 2004

OFFICE OF PETITIONS

In re Application of :
Kazuyoshi Sotoyama et al :
Application No. 10/709,674 : NOTICE
Filed: May 21, 2004 :
Attorney Docket No. SHG-030P2 :

This is a notice regarding your request for acceptance of a fee deficiency submission under 37 CFR 1.28. On September 1, 1998, the Court of Appeals for the Federal Circuit held that 37 CFR 1.28(c) is the sole provision governing the time for correction of the erroneous payment of the issue fee as a small entity. **See DH Technology v. Synergystex International, Inc. 154 F.3d 1333, 47 USPQ2d 1865 (Fed. Cir. Sept. 1, 1998).**

The Office no longer investigates or rejects original or reissue applications under 37 CFR 1.56. **1098 Off. Gaz. Pat. Office 502 (January 3, 1989).** Therefore, nothing in this Notice is intended to imply that an investigation was done.

Your fee deficiency submission under 37 CFR 1.28 is hereby **ACCEPTED.**

Inquiries related to this communication should be directed to the Office of Petitions Staff at (703) 305-9285.

This matter is being referred to Technology Center AU 1761 for examination in due course.

Wan Laymon
Petitions Examiner
Office of Petitions
Office of the Deputy Commissioner
for Patent Examination Policy

UNITED STATES PATENT AND TRADEMARK OFFICE

Commissioner for Patents
United States Patent and Trademark Office
P.O. Box 1450
Alexandria, VA 22313-1450
www.uspto.gov

BROOKS KUSHMAN P.C. / LEAR CORPORATION
1000 TOWN CENTER
TWENTY-SECOND FLOOR
SOUTHFIELD MI 48075-1238

COPY MAILED

SEP 14 2007

OFFICE OF PETITIONS

In re Application of	:	
Borrego Bel et al.	:	
Application No. 10/709,677	:	DECISION ON PETITION
Filed: 05/21/2004	:	UNDER 37 CFR 1.78(a)(3)
Attorney Docket No. LEAR 8153ES PUSA	:	

This is a decision on the petition under 37 CFR 1.78(a)(3), filed 18 July, 2007, to accept an unintentionally delayed claim under 35 U.S.C. §§ 120 and 365(c) for the benefit of priority to prior-filed international Application No. PCT/ES2001/000462, filed on 27 November, 2001, as set forth in the accompanying amendment.

The petition is **GRANTED.**

A petition for acceptance of a claim for late priority under 37 CFR 1.78(a)(3) is only applicable to those applications filed on or after November 29, 2000. Further, the petition is appropriate only after the expiration of the period specified in 37 CFR 1.78(a)(2)(ii). In addition, the petition under 37 CFR 1.78(a)(3) must be accompanied by:

(1) the reference required by 35 U.S.C. § 120 and 37 CFR 1.78(a)(2)(i) of the prior-filed application, unless previously submitted;

(2) the surcharge set forth in § 1.17(t); and

(3) a statement that the entire delay between the date the claim was due under 37 CFR 1.78(a)(2)(ii) and the date the claim was filed was unintentional. The Director may require additional information where there is a question whether the delay was unintentional.

All of the above requirements having been satisfied, the late claim for priority under 35 U.S.C. §§ 120 and 365(c) is accepted as being unintentionally delayed.

The granting of the petition to accept the delayed benefit claim to the prior-filed application under 37 CFR 1.78(a)(3) should not be construed as meaning that the application is entitled to the benefit of the prior-filed application. In order for the application to be entitled to the

benefit of the prior-filed application, all other requirements under 35 U.S.C. §§ 120 and 365(c) and 37 CFR 1.78(a)(1) and (a)(2) must be met. Similarly, the fact that the corrected Filing Receipt accompanying this decision on petition includes the prior-filed application should not be construed as meaning that applicant is entitled to the claim for benefit of priority to the prior-filed application noted thereon. Accordingly, the examiner will, in due course, consider this benefit claim and determine whether the application is entitled to the benefit of the earlier filing date.

A corrected Filing Receipt, which includes the priority claim to the prior-filed application, accompanies this decision on petition.

Any inquiries concerning this decision may be directed to Senior Petitions Attorney Douglas I. Wood at (571) 272-3231. All other inquiries concerning either the examination procedures or status of the application should be directed to the Technology Center.

This application is being forwarded to the examiner of Technology Center Art Unit 2836 for consideration of applicant's entitlement to claim benefit of priority under 35 U.S.C. §§ 120 and 365(c) to the above-noted, prior-filed PCT application.

Christina Tartera Donnell

Christina Tartera Donnell
Senior Petitions Attorney
Office of Petitions

ATTACHMENT: Corrected Filing Receipt

UNITED STATES PATENT AND TRADEMARK OFFICE

UNITED STATES DEPARTMENT OF COMMERCE
United States Patent and Trademark Office
Address: COMMISSIONER FOR PATENTS
P.O. Box 1450
Alexandria, Virginia 22313-1450
www.uspto.gov

APPL NO.	FILING OR 371(c) DATE	ART UNIT	FIL FEE REC'D	ATTY.DOCKET NO	TOT CLMS	IND CLMS
10/709,677	05/21/2004	2836	770	LEAR 8153ES PUSA	19	2

CONFIRMATION NO. 3676

CORRECTED FILING RECEIPT

34007
BROOKS KUSHMAN P.C. / LEAR CORPORATION
1000 TOWN CENTER
TWENTY-SECOND FLOOR
SOUTHFIELD, MI 48075-1238

OC000000025821662

Date Mailed: 09/13/2007

Receipt is acknowledged of this nonprovisional patent application. The application will be taken up for examination in due course. Applicant will be notified as to the results of the examination. Any correspondence concerning the application must include the following identification information: the U.S. APPLICATION NUMBER, FILING DATE, NAME OF APPLICANT, and TITLE OF INVENTION. Fees transmitted by check or draft are subject to collection. Please verify the accuracy of the data presented on this receipt. **If an error is noted on this Filing Receipt, please write to the Office of Initial Patent Examination's Filing Receipt Corrections. Please provide a copy of this Filing Receipt with the changes noted thereon. If you received a "Notice to File Missing Parts" for this application, please submit any corrections to this Filing Receipt with your reply to the Notice. When the USPTO processes the reply to the Notice, the USPTO will generate another Filing Receipt incorporating the requested corrections (if appropriate).**

Applicant(s)

Carles Borrego Bel, Valls, SPAIN;
Joan Fontanilles Pinas, Valls, SPAIN;

Assignment For Published Patent Application

LEAR CORPORATION, Southfield, MI

Power of Attorney: The patent practitioners associated with Customer Number **34007**.

Domestic Priority data as claimed by applicant

This application is a CON of PCT/ES2001/000462 11/27/2001

Foreign Applications

If Required, Foreign Filing License Granted: 07/01/2004

The country code and number of your priority application, to be used for filing abroad under the Paris Convention, is US10/709,677

Projected Publication Date: Not Applicable

Non-Publication Request: No

Early Publication Request: No

Title

SYSTEM AND METHOD FOR PROTECTING AGAINST SHORT CIRCUITS IN ELECTRIC POWER DISTRIBUTION ARCHITECTURES WITH TWO VOLTAGE LEVELS

Preliminary Class

307

PROTECTING YOUR INVENTION OUTSIDE THE UNITED STATES

Since the rights granted by a U.S. patent extend only throughout the territory of the United States and have no effect in a foreign country, an inventor who wishes patent protection in another country must apply for a patent in a specific country or in regional patent offices. Applicants may wish to consider the filing of an international application under the Patent Cooperation Treaty (PCT). An international (PCT) application generally has the same effect as a regular national patent application in each PCT-member country. The PCT process **simplifies** the filing of patent applications on the same invention in member countries, but **does not result** in a grant of "an international patent" and does not eliminate the need of applicants to file additional documents and fees in countries where patent protection is desired.

Almost every country has its own patent law, and a person desiring a patent in a particular country must make an application for patent in that country in accordance with its particular laws. Since the laws of many countries differ in various respects from the patent law of the United States, applicants are advised to seek guidance from specific foreign countries to ensure that patent rights are not lost prematurely.

Applicants also are advised that in the case of inventions made in the United States, the Director of the USPTO must issue a license before applicants can apply for a patent in a foreign country. The filing of a U.S. patent application serves as a request for a foreign filing license. The application's filing receipt contains further information and guidance as to the status of applicant's license for foreign filing.

Applicants may wish to consult the USPTO booklet, "General Information Concerning Patents" (specifically, the section entitled "Treaties and Foreign Patents") for more information on timeframes and deadlines for filing foreign patent applications. The guide is available either by contacting the USPTO Contact Center at 800-786-9199, or it can be viewed on the USPTO website at http://www.uspto.gov/web/offices/pac/doc/general/index.html.

For information on preventing theft of your intellectual property (patents, trademarks and copyrights), you may wish to consult the U.S. Government website, http://www.stopfakes.gov. Part of a Department of Commerce initiative, this website includes self-help "toolkits" giving innovators guidance on how to protect intellectual property in specific countries such as China, Korea and Mexico. For questions regarding patent enforcement issues, applicants may call the U.S. Government hotline at 1-866-999-HALT (1-866-999-4158).

LICENSE FOR FOREIGN FILING UNDER
Title 35, United States Code, Section 184
Title 37, Code of Federal Regulations, 5.11 & 5.15

GRANTED

The applicant has been granted a license under 35 U.S.C. 184, if the phrase "IF REQUIRED, FOREIGN FILING LICENSE GRANTED" followed by a date appears on this form. Such licenses are issued in all applications where the conditions for issuance of a license have been met, regardless of whether or not a license may be required as set forth in 37 CFR 5.15. The scope and limitations of this license are set forth in 37 CFR 5.15(a) unless an earlier license has been issued under 37 CFR 5.15(b). The license is subject to revocation upon written notification. The

date indicated is the effective date of the license, unless an earlier license of similar scope has been granted under 37 CFR 5.13 or 5.14.

This license is to be retained by the licensee and may be used at any time on or after the effective date thereof unless it is revoked. This license is automatically transferred to any related applications(s) filed under 37 CFR 1.53(d). This license is not retroactive.

The grant of a license does not in any way lessen the responsibility of a licensee for the security of the subject matter as imposed by any Government contract or the provisions of existing laws relating to espionage and the national security or the export of technical data. Licensees should apprise themselves of current regulations especially with respect to certain countries, of other agencies, particularly the Office of Defense Trade Controls, Department of State (with respect to Arms, Munitions and Implements of War (22 CFR 121-128)); the Bureau of Industry and Security, Department of Commerce (15 CFR parts 730-774); the Office of Foreign Assets Control, Department of Treasury (31 CFR Parts 500+) and the Department of Energy.

NOT GRANTED

No license under 35 U.S.C. 184 has been granted at this time, if the phrase "IF REQUIRED, FOREIGN FILING LICENSE GRANTED" DOES NOT appear on this form. Applicant may still petition for a license under 37 CFR 5.12, if a license is desired before the expiration of 6 months from the filing date of the application. If 6 months has lapsed from the filing date of this application and the licensee has not received any indication of a secrecy order under 35 U.S.C. 181, the licensee may foreign file the application pursuant to 37 CFR 5.15(b).

UNITED STATES PATENT AND TRADEMARK OFFICE

Commissioner for Patents
United States Patent and Trademark Office
P.O. Box 1450
Alexandria, VA 22313-1450
www.uspto.gov
DIW Dec-07

NOVAK DRUCE AND QUIGG LLP (Volvo)
1000 LOUISIANA STREET
FIFTY-THIRD FLOOR
HOUSTON TX 77002

COPY MAILED

DEC 2 0 2007

OFFICE OF PETITIONS

In re Application of	:	
Ockborn et al.	:	DECISION ON PETITION
Application Number: 10/709683	:	
Filing Date: 05/22/2004	:	
Attorney Docket Number:	:	
7589.176.PCUS00	:	

This is a decision on the petition under 37 CFR 1.137(b),[1] filed on October 3, 2007, to revive the above-identified application.

The petition is **DISMISSED**.

Any request for reconsideration of this decision must be submitted within TWO (2) MONTHS from the mail date of this decision. Extensions of time under 37 CFR 1.136(a) are permitted. The reconsideration request should include a cover letter entitled "Renewed Petition Under 37 CFR 1.137(b)." This is not a final agency decision.

---

[1] Effective December 1, 1997, the provisions of 37 CFR 1.137(b) now provide that where the delay in reply was unintentional, a petition may be filed to revive an abandoned application or a lapsed patent pursuant to 37 CFR 1.137(b). A grantable petition filed under the provisions of 37 CFR 1.137(b) must be accompanied by:

(1) the required reply, unless previously filed. In a nonprovisional application abandoned for failure to prosecute, the required reply may be met by the filing of a continuing application. In a nonprovisional application filed on or after June 8, 1995, and abandoned for failure to prosecute, the required reply may also be met by the filing of a request for continued examination in compliance with § 1.114. In an application or patent, abandoned or lapsed for failure to pay the issue fee or any portion thereof, the required reply must be the payment of the issue fee or any outstanding balance thereof. In an application abandoned for failure to pay the publication fee, the required reply must include payment of the publication fee.

(2) the petition fee as set forth in 37 CFR 1.17(m);

(3) a statement that the entire delay in filing the required reply from the due date for the reply until the filing of a grantable petition pursuant to 37 CFR 1.137(b) was unintentional. The Commissioner may required additional information where there is a question whether the delay was unintentional; and

(4) any terminal disclaimer (and fee as set forth in 37 CFR 1.20(d)) required pursuant to 37 CFR 1.137(c)).

This application became abandoned on January 26, 2007, for failure to file a timely reply to the final Office action mailed on October 25, 2006, which set a three (3) month shortened statutory period for reply. No extensions of the time for reply were filed in accordance with 37 CFR 1.136(a). Notice of Abandonment was mailed on May 30, 2007.

The petition lacks the required reply. The only proper reply to a final Office action is a Notice of Appeal and fee, Request for Continuing Examination and submission under 37 CFR 1.114, a continuing application, or an amendment placing the application in *prima facie* condition for allowance. The examiner has determined that the amendment filed on October 3, 2007, does not place the case in *prima facie* condition for allowance.

A copy of the examiner's Advisory Action is enclosed for petitioner's reference.

Further correspondence with respect to this matter should be addressed as follows:

By mail: Mail Stop Petition
Commissioner for Patents
P.O. Box 1450
Alexandria, VA 22313-1450

By FAX: (571) 273-8300
Attn: Office of Petitions

By hand: Customer Service Window
Mail Stop Petition
Randolph Building
401 Dulany Street
Alexandria, VA 22314

Telephone inquiries concerning this matter may be directed to the undersigned at (571) 272-3231.

DIWood

Douglas I. Wood
Senior Petitions Attorney
Office of Petitions

Encl: Advisory Action Before the Filing of an Appeal Brief

Advisory Action Before the Filing of an Appeal Brief	**Application No.** 10/709,683	**Applicant(s)** OCKBORN ET AL.	
	Examiner Sarang Afzali	**Art Unit** 3726	

--The MAILING DATE of this communication appears on the cover sheet with the correspondence address --

THE REPLY FILED 03 October 2007 FAILS TO PLACE THIS APPLICATION IN CONDITION FOR ALLOWANCE.

1. ☒ The reply was filed after a final rejection, but prior to or on the same day as filing a Notice of Appeal. To avoid abandonment of this application, applicant must timely file one of the following replies: (1) an amendment, affidavit, or other evidence, which places the application in condition for allowance; (2) a Notice of Appeal (with appeal fee) in compliance with 37 CFR 41.31; or (3) a Request for Continued Examination (RCE) in compliance with 37 CFR 1.114. The reply must be filed within one of the following time periods:
   a) ☒ The period for reply expires 6 months from the mailing date of the final rejection.
   b) ☐ The period for reply expires on: (1) the mailing date of this Advisory Action, or (2) the date set forth in the final rejection, whichever is later. In no event, however, will the statutory period for reply expire later than SIX MONTHS from the mailing date of the final rejection.

   Examiner Note: If box 1 is checked, check either box (a) or (b). ONLY CHECK BOX (b) WHEN THE FIRST REPLY WAS FILED WITHIN TWO MONTHS OF THE FINAL REJECTION. See MPEP 706.07(f).

Extensions of time may be obtained under 37 CFR 1.136(a). The date on which the petition under 37 CFR 1.136(a) and the appropriate extension fee have been filed is the date for purposes of determining the period of extension and the corresponding amount of the fee. The appropriate extension fee under 37 CFR 1.17(a) is calculated from: (1) the expiration date of the shortened statutory period for reply originally set in the final Office action; or (2) as set forth in (b) above, if checked. Any reply received by the Office later than three months after the mailing date of the final rejection, even if timely filed, may reduce any earned patent term adjustment. See 37 CFR 1.704(b).

NOTICE OF APPEAL

2. ☐ The Notice of Appeal was filed on _____. A brief in compliance with 37 CFR 41.37 must be filed within two months of the date of filing the Notice of Appeal (37 CFR 41.37(a)), or any extension thereof (37 CFR 41.37(e)), to avoid dismissal of the appeal. Since a Notice of Appeal has been filed, any reply must be filed within the time period set forth in 37 CFR 41.37(a).

AMENDMENTS

3. ☒ The proposed amendment(s) filed after a final rejection, but prior to the date of filing a brief, will not be entered because
   (a) ☒ They raise new issues that would require further consideration and/or search (see NOTE below);
   (b) ☐ They raise the issue of new matter (see NOTE below);
   (c) ☐ They are not deemed to place the application in better form for appeal by materially reducing or simplifying the issues for appeal; and/or
   (d) ☐ They present additional claims without canceling a corresponding number of finally rejected claims.
   NOTE: *See Continuation Sheet*. (See 37 CFR 1.116 and 41.33(a)).
4. ☐ The amendments are not in compliance with 37 CFR 1.121. See attached Notice of Non-Compliant Amendment (PTOL-324).
5. ☐ Applicant's reply has overcome the following rejection(s): _____.
6. ☐ Newly proposed or amended claim(s) _____ would be allowable if submitted in a separate, timely filed amendment canceling the non-allowable claim(s).
7. ☒ For purposes of appeal, the proposed amendment(s): a) ☒ will not be entered, or b) ☐ will be entered and an explanation of how the new or amended claims would be rejected is provided below or appended.
   The status of the claim(s) is (or will be) as follows:
   Claim(s) allowed: _____.
   Claim(s) objected to: _____.
   Claim(s) rejected: *1-15*.
   Claim(s) withdrawn from consideration: _____.

AFFIDAVIT OR OTHER EVIDENCE

8. ☐ The affidavit or other evidence filed after a final action, but before or on the date of filing a Notice of Appeal will not be entered because applicant failed to provide a showing of good and sufficient reasons why the affidavit or other evidence is necessary and was not earlier presented. See 37 CFR 1.116(e).
9. ☐ The affidavit or other evidence filed after the date of filing a Notice of Appeal, but prior to the date of filing a brief, will not be entered because the affidavit or other evidence failed to overcome all rejections under appeal and/or appellant fails to provide a showing a good and sufficient reasons why it is necessary and was not earlier presented. See 37 CFR 41.33(d)(1).
10. ☐ The affidavit or other evidence is entered. An explanation of the status of the claims after entry is below or attached.

REQUEST FOR RECONSIDERATION/OTHER

11. ☐ The request for reconsideration has been considered but does NOT place the application in condition for allowance because: _____.
12. ☐ Note the attached Information Disclosure Statement(s). (PTO/SB/08) Paper No(s). _____
13. ☐ Other: _____.

/DAVID BRYANT/
SPE, AU3726

Continuation of 3. NOTE: The new claims are different in scope than those previously presented, and would require further consideration and/or search .

UNITED STATES PATENT AND TRADEMARK OFFICE

Commissioner for Patents
United States Patent and Trademark Office
P.O. Box 1450
Alexandria, VA 22313-1450
www.uspto.gov
DRW Feb-09

NOVAK DRUCE AND QUIGG LLP (Volvo)
1000 LOUISIANA STREET
FIFTY-THIRD FLOOR
HOUSTON TX 77002

COPY MAILED

FEB 04 2009

OFFICE OF PETITIONS

In re Application of	:	
Ockborn et al.	:	DECISION ON PETITION
Application Number: 10/709683	:	
Filing Date: 05/22/2004	:	
Attorney Docket Number:	:	
7589.176.PCUS00	:	

This is a decision on the renewed petition under 37 CFR 1.137(b),[1] filed on December 28, 2007, to revive the above-identified application.

The petition is **GRANTED**.

This application became abandoned on January 26, 2007, for failure to file a timely reply to the final Office action mailed on October 25, 2006, which set a three (3) month shortened statutory period for reply. No extensions of the time for reply were filed in accordance with 37 CFR 1.136(a). Notice of

---

[1] Effective December 1, 1997, the provisions of 37 CFR 1.137(b) now provide that where the delay in reply was unintentional, a petition may be filed to revive an abandoned application or a lapsed patent pursuant to 37 CFR 1.137(b). A grantable petition filed under the provisions of 37 CFR 1.137(b) must be accompanied by:

(1) the required reply, unless previously filed. In a nonprovisional application abandoned for failure to prosecute, the required reply may be met by the filing of a continuing application. In a nonprovisional application filed on or after June 8, 1995, and abandoned for failure to prosecute, the required reply may also be met by the filing of a request for continued examination in compliance with § 1.114. In an application or patent, abandoned or lapsed for failure to pay the issue fee or any portion thereof, the required reply must be the payment of the issue fee or any outstanding balance thereof. In an application abandoned for failure to pay the publication fee, the required reply must include payment of the publication fee.

(2) the petition fee as set forth in 37 CFR 1.17(m);

(3) a statement that the entire delay in filing the required reply from the due date for the reply until the filing of a grantable petition pursuant to 37 CFR 1.137(b) was unintentional. The Commissioner may required additional information where there is a question whether the delay was unintentional; and

(4) any terminal disclaimer (and fee as set forth in 37 CFR 1.20(d)) required pursuant to 37 CFR 1.137(c)).

Abandonment was mailed on May 30, 2007. The petition filed on October 3, 2007, was dismissed on December 20, 2007.

The subject renewed petition is accompanied by a Request for Continued Examination (RCE) and the required fee. Petitioner has requested that the amendment filed on October 3, 2007 be considered as the reply required under 37 CFR 1.114.

This application is being referred to Technology Center Art Unit 3726 for further processing.

Telephone inquiries concerning this matter may be directed to the undersigned at (571)272-3231.

D Wood

Douglas I. Wood
Senior Petitions Attorney
Office of Petitions

UNITED STATES PATENT AND TRADEMARK OFFICE

COMMISSIONER FOR PATENTS
UNITED STATES PATENT AND TRADEMARK OFFICE
P.O. BOX 1450
ALEXANDRIA, VA 22313-1450
www.uspto.gov

Teddy C. Scott, Jr., Ph.D.
Howrey, LLP
2941 Fairview Park Drive – Ste. 200
Falls Church, VA 22042-9922

COPY MAILED

MAR 3 1 2006

OFFICE OF PETITIONS

In re Application of	:	
Itzhak Bentwich, et. al.	:	
Application No. 10/709,691	:	ON PETITION
Filed: May 24, 2004	:	
Attorney Docket No. 06087.0400.CPUS01	:	

This is a decision on the petition under 37 CFR 1.137(b), filed February 21, 2006, to revive the above-identified application.

The application became abandoned for failure to respond to the Notice to Comply with Requirements for Patent Applications Containing Nucleotide Sequence and/or Amino Acid Sequence Disclosures mailed July 2, 2004.

The petition satisfies the requirements of 37 CFR 1.137(b) in that petitioner has supplied (1) the reply in the form of a replacement sequence listing; (2) the petition fee of $750; and (3) an adequate statement of unintentional delay. Therefore, the petition is **GRANTED**.

The Office also acknowledges receipt of an amendment to the specification filed February 21, 2006.

The Power of Attorney and Correspondence Address Indication Form filed April 18, 2005 has been accepted and made of record.

The application file is being referred to the Office of Initial Patent Examination for further processing.

Telephone inquiries concerning this decision should be directed to the undersigned at (571) 272-3226.

Andrea Smith
Petitions Examiner
Office of Petitions

UNITED STATES PATENT AND TRADEMARK OFFICE

UNITED STATES DEPARTMENT OF COMMERCE
United States Patent and Trademark Office
Address: COMMISSIONER FOR PATENTS
P.O. Box 1450
Alexandria, Virginia 22313-1450
www.uspto.gov

FORD GLOBAL TECHNOLOGIES, LLC
FAIRLANE PLAZA SOUTH, SUITE 800
330 TOWN CENTER DRIVE
DEARBORN, MI 48126

Mail Date: 04/21/2010

Applicant	: Alex Colvin	: DECISION ON REQUEST FOR
Patent Number	: 7568383	: RECALCULATION of PATENT
Issue Date	: 08/04/2009	: TERM ADJUSTMENT IN VIEW
Appliction No	: 10/709,704	: OF WYETH AND NOTICE OF INTENT TO
Filed	: 05/24/2004	: ISSUE CERTIFICATE OF CORRECTION
		:

The Request for Recalculation is **GRANTED** to the extent indicated.

The patent term adjustment has been determined to be **901** days. The USPTO will *sua sponte* issue a certificate of correction reflecting the amount of PTA days determined by the recalculation.

Prior to the issuance of the certificate of correction, the USPTO will afford patentee an opportunity to be heard and request reconsideration. Accordingly, patentee has **one month or thirty (30) days**, whichever is longer, to file a request for reconsideration of this patent term adjustment calculation. See 35 U.S.C. 154(b)(3)(B)(ii) and 37 CFR 1.322(a)(4). No extensions of time will be granted under 37 CFR 1.136.

Patentee should use document code PET.OP if electronically filing a request for reconsideration of this patent term adjustment calculation. The patentee must also include the information required by 37 CFR 1.705(b)(2) and the fee required by 37 CFR 1.18(e). If patentee does not file a timely request for reconsideration of this patent term adjustment calculation including the information required by 37 CFR 1.705(b)(2) and the fee required by 37 CFR 1.18(e), the USPTO will issue a certificate of correction reflecting the PTA determination noted above.

Patentee should be aware that in order to preserve the right to review in the United States District Court for the District of Columbia of the USPTO patent term adjustment determination, patentee must ensure that he or she also take the steps required under 35 U.S.C. 154(b)(4)(A) in a timely manner. Nothing in the request for recalculation should be construed as providing an alternative time frame for commencing a civil action under 35 U.S.C. 154(b)(4)(A).

Any questions concerning this decision should be directed to the Office of Patent Legal Administration at 571-272-7702.

UNITED STATES PATENT AND TRADEMARK OFFICE

UNITED STATES DEPARTMENT OF COMMERCE
United States Patent and Trademark Office
Address: COMMISSIONER FOR PATENTS
P.O. Box 1450
Alexandria, Virginia 22313-1450
www.uspto.gov

FORD GLOBAL TECHNOLOGIES, LLC
FAIRLANE PLAZA SOUTH, SUITE 800
330 TOWN CENTER DRIVE
DEARBORN, MI 48126

Mail Date: 05/18/2010

Applicant : Alex Colvin
Patent Number : 7568383
Issue Date : 08/04/2009
Application No: 10/709,704
Filed : 05/24/2004

: NOTICE CONCERNING IMPROPER
: CALCULATION OF PATENT TERM
: ADJUSTMENT BASED UPON USPTO
: IMPROPERLY MEASURING REDUCTION
: PERIOD UNDER 37 CFR 1.704(c)(10).

The United States Patent and Trademark Office (USPTO) discovered that in processing the recent recalculation decisions mailed in response to patentee's filed Request for Recalculation of Patent Term Adjustment in view of Wyeth, the USPTO improperly measured the reduction period for reductions under 37 CFR 1.704(c)(10). Pursuant to 37 CFR 1.704(c)(10), patentee's reduction begins on the date of filing the amendment under 37 CFR 1.312 ("1.312 amendment") or other related paper and ends on the date that the Office mails a response to the filing of the 1.312 amendment or other paper. It has been discovered that during the recalculation, the calculation failed to the limit the reduction to the mail date of the response to the 1.312 amendment or other paper. Accordingly, patentee's reductions were greater than warranted.

This notice **VACATES** the previous GRANTED request for recalculation and provides patentee with a revised GRANTED recalculation.

The patent term adjustment has been determined to be **997** days. The USPTO will *sua sponte* issue a certificate of correction reflecting the amount of patent term adjustment (PTA) days determined by the recalculation.

Prior to the issuance of the certificate of correction, the USPTO will afford patentee an opportunity to be heard and request reconsideration. Accordingly, patentee has **one month or thirty (30) days** from the mail date of this notice, whichever is longer, to file a request for reconsideration of this PTA calculation. See 35 U.S.C. § 154(b)(3)(B)(ii) and 37 CFR 1.322(a)(4).

Patentee should use document code PET.OP if electronically filing a request for reconsideration of this PTA calculation. The patentee must also include the information required by 37 CFR 1.705(b)(2), and the fee required by 37 CFR 1.18(e). If patentee does not file a timely request for reconsideration of this PTA calculation, including the information required by 37 CFR 1.705(b)(2) and the fee required by 37 CFR 1.18(e), the USPTO will issue a certificate of correction reflecting the PTA determination noted above.

Patentee should be aware that in order to preserve the right of review of the USPTO's PTA determination in the United States District Court for the District of Columbia, patentee must ensure that the steps required under 35 U.S.C. § 154 (b)(4) are taken in a timely manner. Nothing in the request for recalculation should be construed as providing an alternative time frame for commencing a civil action under 35 U.S.C. § 154(b)(4).

UNITED STATES PATENT AND TRADEMARK OFFICE

Commissioner for Patents
United States Patent and Trademark Office
P.O. Box 1450
Alexandria, VA 22313-1450
www.uspto.gov

JIANQ CHYUN INTELLECTUAL PROPERTY OFFICE
7 FLOOR-1, NO. 100
ROOSEVELT ROAD, SECTION 2
TAIPEI 100 TW TAIWAN **AIRMAIL**

COPY MAILED

DEC 03 2004

OFFICE OF PETITIONS

In re Application of :
Hung-Lieh Hu et al :
Application No. 10/709,767 : NOTICE
Filed: May 27, 2004 :
Attorney Docket No. 13292-US-PA :

This is a notice regarding your request for acceptance of a fee deficiency submission under 37 CFR 1.28. On September 1, 1998, the Court of Appeals for the Federal Circuit held that 37 CFR 1.28(c) is the sole provision governing the time for correction of the erroneous payment of the issue fee as a small entity. **See DH Technology v. Synergystex International, Inc. 154 F.3d 1333, 47 USPQ2d 1865 (Fed. Cir. Sept. 1, 1998).**

The Office no longer investigates or rejects original or reissue applications under 37 CFR 1.56. **1098 Off. Gaz. Pat. Office 502 (January 3, 1989).** Therefore, nothing in this Notice is intended to imply that an investigation was done.

Your fee deficiency submission under 37 CFR 1.28 is hereby **ACCEPTED.**

Inquiries related to this communication should be directed to the Office of Petitions Staff at (703) 305-9285.

This file is being forwarded to Technology Center AU 2853.

Wan Laymon
Petitions Examiner
Office of Petitions
Office of the Deputy Commissioner
for Patent Examination Policy

UNITED STATES PATENT AND TRADEMARK OFFICE

Commissioner for Patents
United States Patent and Trademark Office
P.O. Box 1450
Alexandria, VA 22313-1450
www.uspto.gov

Date : January 5, 2007

Patent No. :6,961,403
Inventor(s) :John S Austin, et al.
Issued : November 1, 2005
Title : PROGRAMMABLE FREQUENCY DIVIDER WITH JSYMMETRICAL OUTPUT

Re: Request for Certificate of Correction

The Certificates of Correction Branch received your request to substitute formal drawings for informal drawings.

Your request has been denied. The examiner clearly stated in his first Office Action Summary of February 4, 2005 and in the Notice of Allowability, June 14, 2004 "The drawings filed on May 28, 2004 are accepted by the Examiner."

The file does not contain a Notice of Draftsperson's Patent Drawing Review requesting corrected or formal drawings. In addition, formal drawings must be entered prior to paying the issue fee.

In view of the foregoing, your request in this matter is hereby denied. Any inquries concerning this communication should be directed to Ms. A. Green at (703) 308-9390, ext. 123.

Cecelia Newman
Decisions & Certificates
of Correction Branch
(703) 308-9390 or (703) 308- 9350 Ext. 123

IBM
672-E Iplaw
1000 River Road
Essex Jct. VT 05452

CBN/arg

UNITED STATES PATENT AND TRADEMARK OFFICE

UNITED STATES DEPARTMENT OF COMMERCE
United States Patent and Trademark Office
Address: COMMISSIONER FOR PATENTS
P.O. Box 1450
Alexandria, Virginia 22313-1450
www.uspto.gov

CALFEE HALTER & GRISWOLD, LLP
800 SUPERIOR AVENUE
SUITE 1400
CLEVELAND, OH 44114

Mail Date: 08/03/2010

Applicant	: Alan Bauer	: DECISION ON REQUEST FOR
Patent Number	: 7641161	: RECALCULATION of PATENT
Issue Date	: 01/05/2010	: TERM ADJUSTMENT IN VIEW
Application No	: 10/709,814	: OF WYETH AND NOTICE OF INTENT TO
Filed	: 05/28/2004	: ISSUE CERTIFICATE OF CORRECTION
		:

The Request for Recalculation is **GRANTED** to the extent indicated.

The patent term adjustment has been determined to be **993** days. The USPTO will *sua sponte* issue a certificate of correction reflecting the amount of PTA days determined by the recalculation.

Prior to the issuance of the certificate of correction, the USPTO will afford patentee an opportunity to be heard and request reconsideration. Accordingly, patentee has **one month or thirty (30) days**, whichever is longer, to file a request for reconsideration of this patent term adjustment calculation. See 35 U.S.C. 154(b)(3)(B)(ii) and 37 CFR 1.322(a)(4). No extensions of time will be granted under 37 CFR 1.136.

Patentee should use document code PET.OP if electronically filing a request for reconsideration of this patent term adjustment calculation. The patentee must also include the information required by 37 CFR 1.705(b)(2) and the fee required by 37 CFR 1.18(e). If patentee does not file a timely request for reconsideration of this patent term adjustment calculation including the information required by 37 CFR 1.705(b)(2) and the fee required by 37 CFR 1.18(e), the USPTO will issue a certificate of correction reflecting the PTA determination noted above.

Patentee should be aware that in order to preserve the right to review in the United States District Court for the District of Columbia of the USPTO patent term adjustment determination, patentee must ensure that he or she also take the steps required under 35 U.S.C. 154(b)(4)(A) in a timely manner. Nothing in the request for recalculation should be construed as providing an alternative time frame for commencing a civil action under 35 U.S.C. 154(b)(4)(A).

Any questions concerning this decision should be directed to the Office of Patent Legal Administration at 571-272-7702.

UNITED STATES PATENT AND TRADEMARK OFFICE

Commissioner for Patents
United States Patent and Trademark Office
P.O. Box 1450
Alexandria, VA 22313-1450
www.uspto.gov

MANUSHANTHA SPORNY
407 WEBB STREET,
APARTMENT #5
BLACKSBURG VA 24060

COPY MAILED

AUG 25 2005

OFFICE OF PETITIONS

In re Application of
SPORNY
Application No. 10/709,819
Filed: May 31, 2004
Attorney Docket No. DIG001

DECISION
ON PETITION

This is a decision on the petition under 37 CFR 1.137(b), filed June 29, 2005, to revive the above-identified application.

The petition is **GRANTED**.

The above-identified application became abandoned for failure to reply in a timely manner to a Notice to File Corrected Application Papers mailed July 14, 2004, which set a shortened statutory period for reply of two (2) months. No extensions of time under the provisions of 37 CFR 1.136(a) were obtained. Accordingly, the application became abandoned on September 15, 2004.

The petition satisfies the conditions for revival pursuant to the provisions of 37 CFR 1.137(b) in that (1) the reply in the form of a replacement abstract in compliance with 37 CFR 1.72(b) and 37 CFR 1.121; (2) the petition fee of $750; and (3) the required statement of unintentional delay have been received. Accordingly, the reply to the Notice to File Corrected Application Papers of July 14, 2004 is accepted as having been unintentionally delayed.

It is not apparent whether the person signing the statement of unintentional delay was in a position to have firsthand or direct knowledge of the facts and circumstances of the delay at issue. Nevertheless, such statement is being treated as having been made as the result of a reasonable inquiry into the facts and circumstances of such delay. See 37 CFR 10.18(b) and Changes to Patent Practice and Procedure; Final Rule Notice, 62 Fed. Reg. 53131, 53178 (October 10, 1997), 1203 Off. Gaz. Pat. Office 63, 103 (October 21, 1997). In the event that such an inquiry has not been made, petitioner must make such an inquiry. If such inquiry results in the discovery that it is not correct that the entire delay in filing the required reply from the due date for reply until the filing of the grantable petition pursuant to 37 CFR 1.137(b) was unintentional, petitioner must notify the Office.

The Revocation of Power of Attorney and Appointment of New Attorney filed on June 29, 2005 pursuant to 37 CFR 3.71 is not acceptable. While the power of attorney was signed by a person having apparent authority to sign on behalf of the assignee (i.e. President/CEO) as required by 37

CFR 3.73(b)(2), the power of attorney does not include documentary evidence of a chain of title from the original owner to the Assignee (e.g., copy of an executed assignment submitted for recording) or a statement specifying, by reel and frame number, where such evidence is recorded in the Office as required by 37 CFR 3.73(b)(1). See also MPEP 324.II. While a courtesy copy of this decision is being mailed to the person signing the instant petition, all future correspondence will be directed to the address currently of record until such time as appropriate instructions are received to the contrary.

Telephone inquiries concerning this decision should be directed to Denise Pothier at (571) 272-4787.

The application matter is being forwarded to Office of Initial Patent Examination for further processing.

Frances Hicks
Petitions Examiner
Office of Petitions

cc: Nicholas S. Whitelaw
DIEDERIKS & WHITELAW, PLC
12471 Dillingham Square, #301
Woodbridge, VA 22192

UNITED STATES PATENT AND TRADEMARK OFFICE

Commissioner for Patents
United States Patent and Trademark Office
P.O. Box 1450
Alexandria, VA 22313-1450
www.uspto.gov

LUNDEEN & LUNDEEN, PLLC
PO BOX 131144
HOUSTON, TX 77219-1144

COPY MAILED
NOV 20 2008

In re Application of :
Thomas V. Taylor, et al :
Application No. 10/709,828 : ON PETITION
Filed: June 1, 2004 :
Attorney Docket No. TAY-16 :

This is a decision on the petition, filed August 1, 2008, to revive the above-identified application under the provisions of 37 CFR 1.137(b).

The petition is **GRANTED**.

The application became abandoned for failure to reply in a timely manner to the Office action under Ex parte Quayle, 1935 Dec. Comm'r Pat. 11 (1935), mailed January 9, 2008, which set a shortened statutory period for reply of two (2) months. No extension of time under the provisions of 37 CFR 1.136(a) was obtained. Accordingly, the application became abandoned on March 10, 2008. On August 1, 2008, the present petition was filed. A Notice of Abandonment was subsequently mailed on September 24, 2008.

The petition satisfies the requirements of 37 CFR 1.137(b) in that petitioner has supplied (1) the reply in the form of a declaration under 37 CFR 1.63; (2) the petition fee of $770; and (3) an adequate statement of unintentional delay.

The application is being referred to Technology Center AU 3773 for consideration of the response filed August 1, 2008.

Telephone inquiries concerning this decision should be directed to the undersigned at (571) 272-3204. Inquiries relating to further prosecution should be directed to the Technology Center.

Sherry D. Brinkley
Petitions Examiner
Office of Petitions

RECEIVED
CENTRAL FAX CENTER
JAN 25 2005

Patent

Attorney Docket No. ITW7510.076

IN THE UNITED STATES PATENT AND TRADEMARK OFFICE

In re Application of	:	Albrecht, Bruce
Serial No.	:	10/709,835
Filed	:	June 1, 2004
For	:	FUEL SAVING ENGINE DRIVEN WELDING-TYPE DEVICE AND METHOD OF USE
Group Art No.	:	Unknown
Examiner	:	Unknown

CERTIFICATION UNDER 37 CFR 1.8(a) and 1.10

I hereby certify that, on the date shown below, this correspondence is being:

Mailing

□ deposited with the US Postal Service in an envelope addressed to Assistant Commissioner for Patents, Washington, D.C. 20231

37 CFR 1.8(a) **37 CFR 1.10**

□ with sufficient postage as first class mail □ As "Express Mail Post Office to Addressee" Mailing Label No.

Transmission

■ transmitted by facsimile to Fax No.: 703-872-9306 at the Patent and Tradmark Office.

Date: 1-25-05 Signature

Commissioner for Patents
P.O. Box 1450
Alexandria, VA 22313-1450

PETITION GRANTED

Richard Crispino
Special Program Examiner
TC 1700 2/7/05

PETITION TO MAKE APPLICATION SPECIAL

Dear Sir:

Applicant hereby requests that the above-cited application for patent be made Special pursuant to 37 C.F.R. §1.102(c). Please find included herein a signed statement by Applicant verifying that the invention of the above captioned application will materially contribute to the conservation of energy resources and therefore qualifies to

UNITED STATES PATENT AND TRADEMARK OFFICE

Commissioner for Patents
United States Patent and Trademark Office
P.O. Box 1450
Alexandria, VA 22313-1450
www.uspto.gov

LOCKE LIDDELL & SAPP
ATTN: DOCKETING
600 TRAVIS #3400
HOUSTON TX 77002

COPY MAILED

AUG 31 2005

OFFICE OF PETITIONS

In re Application of :
Steven P. Hanson et al :
Application No. 10/709,842 : ON PETITION
Filed: June 1, 2004 :
Attorney Docket No. 10807.0153.NPUS00 :

This is a decision on the petition under 37 CFR 1.137(b), filed May 27, 2005, to revive the above-identified application.

The petition is **DISMISSED**.

Any request for reconsideration of this decision must be submitted within TWO (2) MONTHS from the mail date of this decision. Extensions of time under 37 CFR 1.136(a) are permitted. The reconsideration request should include a cover letter entitled "Renewed Petition under 37 CFR 1.137(b)." This is **not** final agency action within the meaning of 5 U.S.C. § 704.

A grantable petition under 37 CFR 1.137(b)[1] must be accompanied by: (1) the required reply,[2] unless previously filed; (2) the petition fee as set forth in 37 CFR 1.17(m); (3) a statement that the entire delay in filing the required reply from the due date for the reply until the filing of a grantable petition pursuant to 37 CFR 1.137(b) was unintentional; and (4) any terminal disclaimer (and fee as set forth in 37 CFR 1.20(d)) required by 37 CFR 1.137(c). Where there is a question as to whether either the abandonment or the delay in filing a petition under 37 CFR 1.137 was unintentional, the Commissioner may require additional information. See MPEP 711.03(c)(III)(C) and (D). The instant petition lack(s) item(s) (1).

In the Response to Missing Parts Notice of May 27, 2005, it stated that the declaration was attached. However, the Office is not in receipt of the required declaration.

---

[1] As amended effective December 1, 1997. See Changes to Patent Practice and Procedure; Final Rule Notice, 62 Fed. Reg. 53131, 53194-95 (October 10, 1997), 1203 Off. Gaz. Pat. Office 63, 119-20 (October 21, 1997).

[2] In a nonprovisional application abandoned for failure to prosecute, the required reply may be met by the filing of a continuing application. In an application or patent, abandoned or lapsed for failure to pay the issue fee or any portion thereof, the required reply must be the payment of the issue fee or any outstanding balance thereof.

Further correspondence with respect to this matter should be addressed as follows:

By mail: Mail Stop PETITIONS
Commissioner for Patents
Post Office Box 1450
Alexandria, VA 22313-1450

By hand: Customer Window located at:

Randolph Building
401 Dulany Street
Alexandria, VA 22314

By fax: (571) 273-8300
ATTN: Office of Petitions

Telephone inquiries concerning this decision should be directed to the undersigned at (571) 272-3208.

Karen Creasy

Karen Creasy
Petitions Examiner
Office of Petitions
Office of the Deputy Commissioner
for Patent Examination Policy

UNITED STATES PATENT AND TRADEMARK OFFICE

Commissioner for Patents
United States Patent and Trademark Office
P.O. Box 1450
Alexandria, VA 22313-1450
www.uspto.gov

LOCKE LIDDELL & SAPP
ATTN: DOCKETING
600 TRAVIS #3400
HOUSTON TX 77002

COPY MAILED
DEC 29 2005
OFFICE OF PETITIONS

FAX RECEIVED
CANCELLED
OFFICE OF PETITIONS

In re Application of :
Steven P. Hanson et al :
Application No. 10/709,842 : DECISION GRANTING PETITION
Filed: June 1, 2004 : UNDER 37 CFR 1.137(b)
Attorney Docket No. 10807.0153.NPU :
S00 :

This is a decision on the renewed petition under 37 CFR 1.137(b), filed October 3, 2005, to revive the above-identified application.

The petition is **GRANTED**.

The above-identified application became abandoned for failure to reply in a timely manner to the Notice To File Missing Parts Of Nonprovisional Application mailed July 15, 2004, which set a period for reply of two (2) months. No extensions of time under the provisions of 37 CFR 1.136(a) were obtained. Accordingly, the above-identified application became abandoned on September 16, 2004.

Telephone inquiries concerning this decision should be directed to the undersigned at (571) 272-3208.

This matter is being referred to the Office of Initial Patent Examination.

Karen Creasy

Karen Creasy
Petitions Examiner
Office of Petitions
Office of the Deputy Commissioner
for Patent Examination Policy

UNITED STATES PATENT AND TRADEMARK OFFICE

Commissioner for Patents
United States Patent and Trademark Office
P.O. Box 1450
Alexandria, VA 22313-1450
www.uspto.gov

Paper No. 060905

AKA CHAN LLP
900 LAFAYETE STREET, SUITE 710
SANTA CLARA CA 95050

JUL 29 2005

In re Application of:
Graham Balsdon
Serial No.: 10/709,843
Filed: June 1, 2004
Attorney Docket No.: **021648-000500US**

DECISION ON REQUEST TO WITHDRAW FROM RECORD

This is a decision on the request to withdraw as attorney of record under 37 C.F.R. § 1.36, filed April 25, 2005.

The request is **DISMISSED** as moot.

A review of the application file record reveals a proper revocation and power of attorney to the attorneys of AKA CHAN LLP was filed on June 01, 2005. As such, the power of attorney for the attorneys and agents requesting withdrawal has already been revoked. Accordingly, the present request is moot, and must be dismissed.

All future communications form the Office will continue to be directed to the address listed below until otherwise notified by applicant.

Inquiries related to this decision should be directed to Clayton E. LaBalle at (571) 272-1594.

Clayton E. LaBalle, Special Programs Examiner
Technology Center 2800
Semiconductors, Electrical and Optical
Systems and Components

cc: Townsend and Townsend and Crew LLP
Two Embarcadero Center, 8th Floor
San Francisco, CA 94111-3834

UNITED STATES PATENT AND TRADEMARK OFFICE

Commissioner for Patents
United States Patent and Trademark Office
P.O. Box 1450
Alexandria, VA 22313-1450
www.uspto.gov
DIW 08-04

ERNEST A. BEUTLER, ATTORNEY AT LAW
10 RUE MARSEILLE
NEWPORT BEACH CA 92660

COPY MAILED

AUG 3 0 2004

OFFICE OF PETITIONS

In re Application of :
Ariyoshi et al. :
Application No. 10/709,882 : ON PETITION
Filed: 3 June, 2004 :
Atty Docket No. SIMTEK6905 :

This is a decision on the petition filed on 2 August, 2004, which is treated as a petition under 37 CFR 1.53 requesting that the above-identified application be accorded a filing date of 3 June, 2004, with Figures 15 and 16 described in the specification as a part of the original disclosure.

The petition is **dismissed**.

On 3 June, 2004, the application was filed.

On 15 July, 2004, the Office of Initial Patent Examination (OIPE) mailed a Notice of Omitted Item(s) in a Nonprovisional Application stating that the application had been accorded a filing date of 3 June, 2004, but that Figures 15 & 16 described in the specification appeared to have been omitted from the application. A two (2) month period for reply was set.

In response, on 2 August, 2004, the present petition was filed, accompanied by one (1) sheet of drawings containing Figures 15 & 16. Petitioners concede that Figures 15 & 16 were inadvertently omitted from the application as filed, but requests that the application, including Figure 15 and 16, be accorded a filing date of 3 June, 2004, because the omitted figures do not constitute new matter.

Petitioners' argument has been considered, but is not persuasive. The U.S. Patent and Trademark Office (Office) file is the official record of the papers originally filed in this application. A review of the papers originally filed reveals

that no sheet of drawings containing Figure 15 & 16 were filed on 3 June, 2004, since no such sheet of drawings is present among the application papers received on that date. An applicant alleging that a paper was filed in the Office and later misplaced has the burden of proving the allegation by a preponderance of the evidence. As petitioners concede that the omitted drawing figures were not in fact filed on 3 June, 2004, the application cannot be accorded a filing date of 3 June, 2004, with Figures 15 & 16 as a part of the original disclosure.

Moreover, petitioner's assertion that Figures 15 & 16 contain no new matter is not persuasive: the question of new matter is not an issue here. Figures 15 & 16 were simply not filed in the USPTO on 3 June, 2004. Matter included in Figures 15 & 16 may be submitted as an amendment for consideration by the examiner under MPEP sections 608.02(p) and 608.04. In view of the above, the application cannot be accorded 3 June, 2004, as the application filing date with drawing Figures 15 & 16 as a part of the original disclosure.

The application will be processed and examined using only the application papers present on 3 June, 2004. The copy of the one (1) drawing sheet containing Figures 15 & 16 supplied with the present petition will not be used for processing or examination, but will be retained in the application file.

The application is being forwarded to the Office of Initial Patent Examination for further processing with a filing date of 3 June, 2004, using the application papers filed on that date.

Telephone inquiries concerning this matter may be directed to the undersigned at (703)308-6918.

D Wood

Douglas I. Wood
Senior Petitions Attorney
Office of Petitions

SPE: W. Rodriguez

SPE RESPONSE FOR CERTIFICATE OF CORRECTION

Paper No.: _____

DATE : 6/23/06

TO SPE OF : ART UNIT 3746

SUBJECT : Request for Certificate of Correction for Appl. No.: 10/709,884 Patent No.: 7010921

Please respond to this request for a certificate of correction within 7 days.

Please review the requested changes/corrections as shown in the **COCIN** document(s) in the IFW application image. No new matter should be introduced, nor should the scope or meaning of the claims be changed.

Please complete the response (see below) and forward the completed response to scanning using document code **COCX**.

Lamonte M. Newsome
Certificates of Correction Branch
703-308-9390 ext. 112

Thank You For Your Assistance

The request for issuing the above-identified correction(s) is hereby:

Note your decision on the appropriate box.

- ■ **Approved** — All changes apply.
- ☐ **Approved in Part** — Specify below which changes do not apply.
- ☐ **Denied** — State the reasons for denial below.

Comments: _____

_____

_____

_____

_____

_____ SPE

3746 Art Unit

PTO/SB/44 (04-04)
Approved for use through 04/30/2007. OMB 0651-0033
U.S. Patent and Trademark Office; U.S. DEPARTMENT OF COMMERCE
Under the Paperwork Reduction Act of 1995, no persons are required to respond to a collection of information unless it displays a valid OMB control number.
(Also Form PTO-1050)

UNITED STATES PATENT AND TRADEMARK OFFICE
CERTIFICATE OF CORRECTION

PATENT NO. : 7,010,921 B2

DATED : March 14, 2006

INVENTOR(S) : Intile et al.

It is certified that errors appear in the above-identified patent and that said Letters Patent is hereby corrected as shown below:

Column 3:
Line 29, before "annulus" insert -- first --

Column 5:
Line 27, after "so" insert -- as --
Line 43, after "so" insert -- as --

Column 7:
Line 6, after "end" delete "128" and insert therefor -- 130 --

Column 8:
Line 19, after "one" delete "advantages" and insert therefor -- advantage --

Column 10:
Line 8, after "so" insert -- as --

Column 12:
Line 30, before "end" delete "liner" and insert therefor -- outlet --
Line 35, after "so" insert -- as --

PATENT NO. 7,010,921 B2

MAILING ADDRESS OF SENDER:
Cantor Colburn LLP
55 Griffin Road South
Bloomfield, CT 06002

No. of additional copies

This collection of information is required by 37 CFR 1.322, 1.323, and 1.324. The information is required to obtain or retain a benefit by the public which is to file (and by the USPTO to process) an application. Confidentiality is governed by 35 U.S.C. 122 and 37 CFR 1.14. This collection is estimated to take 1.0 hour to complete, including gathering, preparing, and submitting the completed application form to the USPTO. Time will vary depending upon the individual case. Any comments on the amount of time you require to complete this form and/or suggestions for reducing this burden, should be sent to the Chief Information Officer, U.S. Patent and Trademark Office, U.S. Department of Commerce, P.O. Box 1450, Alexandria, VA 22313-1450. DO NOT SEND FEES OR COMPLETED FORMS TO THIS ADDRESS. SEND TO: Attention Certificate of Corrections Branch, Commissioner for Patents, P.O. Box 1450, Alexandria, VA 22313-1450.

If you need assistance in completing this form, call 1-800-PTO-9199 and select option 2.

UNITED STATES PATENT AND TRADEMARK OFFICE

COMMISSIONER FOR PATENTS
UNITED STATES PATENT AND TRADEMARK OFFICE
P.O. BOX 1450
ALEXANDRIA, VA 22313-1450
www.uspto.gov

JUDGE & MURAKAMI IP ASSOCIATES
DOJIMIA BUILDING, 7TH FLOOR
6-8 NISHITEMMA 2-CHOME, KITA-KU
OSAKA-SHI 530-0-047 JP JAPANFISH & RICHARDSON P.C.

COPY MAILED

JAN 19 2007

OFFICE OF PETITIONS

Applicant: Hashikura et al.
Appl. No.: 10/709,889
Filing Date: June 3, 2004
Title: HOLDER FOR USE IN SEMICONDUCTOR OR LIQUID-CRYSTAL MANUFACTURING DEVICE AND SEMICONDUCTOR OR LIQUID-CRYSTAL MANUFACTURING DEVICE IN WHICH THE HOLDER IS INSTALLED
Attorney Docket No.: 039.0043
Pub. No.: US 2004/0244695 A1
Pub. Date: December 9, 2004

This is a decision on the request for corrected of patent application publication under 37 CFR 1.221(b), received on February 8, 2005, for the above-identified application.

The request is granted.

The corrected patent application publication will be published in due course, unless the patent issues before the application is republished.

Inquiries relating to this matter may be directed to Mark O. Polutta at (571) 272-7709 (voice).

Mark O. Polutta
Office of Patent Legal Administration
Office of the Deputy Commissioner
for Patent Examination Policy

SPE RESPONSE FOR CERTIFICATE OF CORRECTION

Paper No.: _____

DATE : 12-18-05

TO SPE OF : ART UNIT 2818

SUBJECT : Request for Certificate of Correction for Appl. No.: 10/709889 Patent No.: 7414823

Please respond to this request for a certificate of correction within 7 days.

FOR IFW FILES:

Please review the requested changes/corrections as shown in the **COCIN** document(s) in the IFW application image. No new matter should be introduced, nor should the scope or meaning of the claims be changed.

Please complete the response (see below) and forward the completed response to scanning using document code **COCX**.

FOR PAPER FILES:

Please review the requested changes/corrections as shown in the attached certificate of correction. Please complete this form (see below) and forward it with the file to:

Certificates of Correction Branch (CofC)
South Tower - 9A22
Palm Location 7580

Certificates of Correction Branch
703-308-9390 ext. 123

Thank You For Your Assistance

The request for issuing the above-identified correction(s) is hereby:
Note your decision on the appropriate box.

☒ **Approved**	**All** changes apply.
☐ **Approved in Part**	Specify below which changes **do not** apply.
☐ **Denied**	State the reasons for denial below.

Comments: _____

_____

_____

_____

_____

Steven Loke — SPE

2818 — Art Unit

PTO/SB/44 (09-07)
Approved for use through 08/31/2010. OMB 0651-0033
U.S. Patent and Trademark Office; U.S. DEPARTMENT OF COMMERCE
Under the Paperwork Reduction Act of 1995, no persons are required to respond to a collection of information unless it displays a valid OMB control number.
(Also Form PTO-1050)

UNITED STATES PATENT AND TRADEMARK OFFICE
CERTIFICATE OF CORRECTION

PATENT NO. : 7,414,823

APPLICATION NO.: 10/709,889

ISSUE DATE : August 19, 2008

INVENTOR(S) : Manabu Hashikura, Hirohiko Nakata, Akira Kuibira, and Masuhiro Natsuhara

It is certified that an error appears or errors appear in the above-identified patent and that said Letters Patent is hereby corrected as shown below:

Column 4, lines 41 and 42, "within 500 □m and that the microroughness be 3 □m (Ra)" should read --within 500 μm and that the microroughness be 3 μm (Ra)--.

Column 7, line 41, "0.7 □m (Ra)" should read --0.7 μm (Ra)--.

Column 7, lines 43 and 44, and lines 62 and 63, as well as column 10, lines 10 and 11, "thermal expansion coefficient (□), and thermal conductivity (□)," each occurrence, should read --thermal expansion coefficient (α), and thermal conductivity (κ)--.

Column 8, Table II, (line 41), "□(× 10^{-6}/°C)" should read --α (× 10^{-6}/°C)--, and "□(W/mK)" should read --κ (W/mK)--.

Column 10, line 7, "0.7 □m (Ra)" should read --0.7 μm (Ra)--; Table VI, (line 29), "□(× 10^{-6}/°C)" should read --α (×10^{-6}/°C)--, and "□(W/mK)" should read --κ (W/mK)--; line 43, "30 □m" should read --30 μm--.

Column 11, Table IX, (line 35), "Ra (□m)" should read --Ra (μm)--; line 47 "3 □m" should read --3 μm--.

MAILING ADDRESS OF SENDER (Please do not use customer number below):

This collection of information is required by 37 CFR 1.322, 1.323, and 1.324. The information is required to obtain or retain a benefit by the public which is to file (and by the USPTO to process) an application. Confidentiality is governed by 35 U.S.C. 122 and 37 CFR 1.14. This collection is estimated to take 1.0 hour to complete, including gathering, preparing, and submitting the completed application form to the USPTO. Time will vary depending upon the individual case. Any comments on the amount of time you require to complete this form and/or suggestions for reducing this burden, should be sent to the Chief Information Officer, U.S. Patent and Trademark Office, U.S. Department of Commerce, P.O. Box 1450, Alexandria, VA 22313-1450. DO NOT SEND FEES OR COMPLETED FORMS TO THIS ADDRESS. SEND TO: **Attention Certificate of Corrections Branch, Commissioner for Patents, P.O. Box 1450, Alexandria, VA 22313-1450.**

If you need assistance in completing the form, call 1-800-PTO-9199 and select option 2.

UNITED STATES PATENT AND TRADEMARK OFFICE

Commissioner for Patents
United States Patent and Trademark Office
P.O. Box 1450
Alexandria, VA 22313-1450
www.uspto.gov

COPY MAILED

MAR 14 2007

OFFICE OF PETITIONS

Connolly Bove Lodge & Hutz, LLP
P.O. Box 2207
Wilmington, DE 19899

In re Application of :

Charles F. Harris Jr. et al. :
Application No. 10/709,903 : DECISION ON PETITION
Filed: June 4, 2004 : TO WITHDRAW
Attorney Docket No. 11755-00003-US : FROM RECORD
:

This is a decision on the Request to Withdraw as attorney or agent of record under 37 C.F.R. § 1.36(b), filed February 19, 2007.

The request is **APPROVED**.

A grantable request to withdraw as attorney/agent of record must be signed by every attorney/agent seeking to withdraw or contain a clear indication that one attorney is signing on behalf of another/others. A request to withdraw will not be approved unless at least 30 (thirty) days would remain between the date of approval and the later of the expiration date of a time to file a response or the expiration date of the maximum time period which can be extended under 37 C.F.R. § 1.136(a).

The request was signed by Patricia Smink Rogowski on behalf of all attorneys of record who are associated with Customer No. 23416.

All attorneys/agents associated with the Customer No. 23416 have been withdrawn.

Applicant is reminded that there is no attorney of record at this time.

The request to change the correspondence of record is not acceptable as the requested correspondence address is not that of: (1) the first named signing inventor; or (2) an intervening assignee of the entire interest under 37 C.F.R 3.71. All future communications from the Office will be directed to the first named signing inventor at the first copied address below until otherwise properly notified by the applicant.

There is an outstanding Office action mailed December 19, 2006 that requires a reply from the applicant.

Telephone inquiries concerning this decision should be directed to Terri Williams at 571-272-2991.

Terri Williams
Petitions Examiner
Office of Petitions

cc: **Charles Harris Jr.**
3207 Stonebridge Blvd.
New Castle, DE 19720

cc: **Wristband Enterprises LLC**
20 Christian Woods Court
Newark, DE 19702

UNITED STATES PATENT AND TRADEMARK OFFICE

UNITED STATES DEPARTMENT OF COMMERCE
United States Patent and Trademark Office
Address: COMMISSIONER FOR PATENTS
P.O. Box 1450
Alexandria, Virginia 22313-1450
www.uspto.gov

APPLICATION NUMBER	FILING OR 371 (c) DATE	FIRST NAMED APPLICANT	ATTY. DOCKET NO./TITLE
10/709,903	06/04/2004	Charles F. Harris JR.	11755-00003-US

CONFIRMATION NO. 3902

23416
CONNOLLY BOVE LODGE & HUTZ, LLP
P O BOX 2207
WILMINGTON, DE 19899

OC000000022881810
OC000000022881810

Date Mailed: 03/13/2007

NOTICE REGARDING CHANGE OF POWER OF ATTORNEY

This is in response to the Power of Attorney filed 02/19/2007.

- The withdrawal as attorney in this application has been accepted. Future correspondence will be mailed to the new address of record. 37 CFR 1.33.

Jerri J. Williams

Office of Initial Patent Examination (571) 272-4000, or 1-800-PTO-9199
FORMER ATTORNEY/AGENT COPY

UNITED STATES PATENT AND TRADEMARK OFFICE

Commissioner for Patents
United States Patent and Trademark Office
P.O. Box 1450
Alexandria, VA 22313-1450
www.uspto.gov

Huntley, L.L.C.
Donald W. Huntley
1105 N. Market Street
P.O. Box 948
Wilmington, DE 19899-0948

COPY MAILED

JUN 0 8 2009

OFFICE OF PETITIONS

In re Application of Harris Jr. et al. :
Application No. 10/709,903 : Decision on Petition
Filing Date: June 4, 2004 :
Attorney Docket No. HARRIS-1 :

This is a decision on the petition under 37 CFR 1.137(b), filed April 7, 2009, to revive the above-identified application.

The petition is **dismissed**.

Any request for reconsideration must be submitted within TWO (2) MONTHS from the mail date of this decision. No further petition fee is required for the request. Extensions of time under 37 CFR 1.136(a) are NOT permitted. The reconsideration request should include a cover letter entitled "Renewed Petition under 37 CFR 1.137(b)."

Te above-identified application became abandoned for failure to reply in a timely manner to the non-final Office action mailed April 17, 2007, which set a shortened statutory period for reply of three (3) months. An extension of time under the provisions of 37 CFR 1.136(a) was not obtained. Accordingly, the above-identified application became abandoned on July 18, 2007. A Notice of Abandonment was mailed on December 13, 2007.

The instant petition requests revival of the application.

A grantable petition under 37 CFR 1.137(b) must be accompanied by:

(1) The reply required to the outstanding Office action or notice, unless previously filed,
(2) The petition fee,
(3) A statement that the entire delay in filing the required reply from the due date for the reply until the filing of a grantable petition pursuant to 37 CFR 1.137(b) was unintentional, and
(4) A terminal disclaimer and fee if the application was filed on or before June 8, 1995 or if the application is a design application.

Petitioner has failed to satisfy item (3) above.

37 CFR 1.137(b) requires a statement that "the entire delay in filing the required reply from the due date for the reply until the filing of a grantable petition pursuant to [37 CFR 1.137(b)] was unintentional." The Office often receives unintentional statements that vary from the language required by 37 CFR 1.137(b)(3). For example, in this case, petitioner states, "The delay in filing the response was unintentional."

In most cases, the Office conditionally grants petitions that include incorrect language. The Office issues a decision stating:

(1) The statement in the petition does not comply with 37 CFR 1.137(b)(3),
(2) The statement in the petition will be construed as a statement that "the entire delay in filing the required reply from the due date for the reply until the filing of a grantable petition pursuant to 37 CFR 1.137(b) was unintentional", and
(3) Petitioner must notify the Office if the interpretation in (2) above is incorrect.

In this case, the petition was filed more than 20 months after the application became abandoned and more than 15 months after the Office mailed a Notice of Abandonment. Therefore, the Office is requiring a statement that complies with 37 CFR 1.137(b)(3).

Any request for reconsideration should include the following statement,

> The entire delay in filing the required reply from the due date for the reply until the filing of this petition pursuant to 37 CFR 1.137(b) was unintentional.

Further correspondence with respect to this matter should be addressed as follows:

By mail: Mail Stop Petition
Commissioner for Patents
P.O. Box 1450
Alexandria, VA 22313-1450

By facsimile: (571) 273-8300
Attn: Office of Petitions

Telephone inquiries regarding this communication should be directed to Petitions Attorney Steven Brantley at (571) 272-3203.

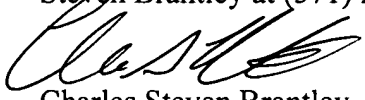

Charles Steven Brantley
Senior Petitions Attorney
Office of Petitions

UNITED STATES PATENT AND TRADEMARK OFFICE

Commissioner for Patents
United States Patent and Trademark Office
P.O. Box 1450
Alexandria, VA 22313-1450
www.uspto.gov

Huntley, L.L.C.
Donald W. Huntley
1105 N. Market Street
P.O. Box 948
Wilmington, DE 19899-0948

COPY MAILED

AUG 2 5 2009

OFFICE OF PETITIONS

In re Application of Harris Jr. et al. :
Application No. 10/709,903 : Decision on Petition
Filing Date: June 4, 2004 :
Attorney Docket No. HARRIS-1 :

This is a decision on the petition under 37 CFR 1.137(b), filed August 7, 2009, to revive the above-identified application.

The petition is **granted**.

The above-identified application became abandoned for failure to reply in a timely manner to the non-final Office action mailed April 17, 2007, which set a shortened statutory period for reply of three (3) months. An extension of time under the provisions of 37 CFR 1.136(a) was not obtained. Accordingly, the above-identified application became abandoned on July 18, 2007. A Notice of Abandonment was mailed on December 13, 2007.

The instant petition requests revival of the application.

A grantable petition under 37 CFR 1.137(b) must be accompanied by:

(1) The reply required to the outstanding Office action or notice, unless previously filed,
(2) The petition fee,
(3) A statement that the entire delay in filing the required reply from the due date for the reply until the filing of a grantable petition pursuant to 37 CFR 1.137(b) was unintentional, and
(4) A terminal disclaimer and fee if the application was filed on or before June 8, 1995 or if the application is a design application.

Petitioner submitted a reply to the April 17, 2007 non-final Office action on April 7, 2009. Petitioner submitted the required petition fee of $810 on April 7, 2009. Petitioner has stated the entire delay in filing the required reply from the due date for the reply until the filing of a grantable petition pursuant to 37 CFR 1.137(b) was unintentional.

Petitioner has met the requirements to revive the above-identified application pursuant to 37 CFR 1.137(b). Therefore, the petition is granted and the application is revived.

Technology Center Art Unit 3772 will be informed of the instant decision and the application will be further examined in due course.

Telephone inquiries regarding this communication should be directed to Petitions Attorney Steven Brantley at (571) 272-3203.

Charles Steven Brantley
Senior Petitions Attorney
Office of Petitions

UNITED STATES PATENT AND TRADEMARK OFFICE

Commissioner for Patents
United States Patent and Trademark Office
P.O. Box 1450
Alexandria, VA 22313-1450
www.uspto.gov

JIANQ CHYUN INTELLECTUAL PROPERTY OFFICE
7 FLOOR-1, NO. 100
ROOSEVELT ROAD, SECTION 2
TAIPEI 100 TW TAIWAN

COPY MAILED

AUG 0 8 2007

OFFICE OF PETITIONS

In re Application of :
Min-Lung Huang, et al. :
Application No. 10/709,923 : ON PETITION
Filed: June 7, 2004 :
Attorney Docket No. 10788-US-PA :

This is a decision in response to the petition, filed January 10, 2007, to revive the above-identified application under the provisions of 37 CFR 1.137(b).

The petition is **GRANTED**.

The application became abandoned for a failure to reply in a timely manner to a non-final Office action mailed April 26, 2006. A Notice of Abandonment was mailed on November 6, 2006. In response, on January 10, 2007, the present petition was filed.

The petition satisfies the conditions for revival pursuant to the provisions of 37 CFR 1.137(b) in that petitioner has supplied (1) the reply in the form of an amendment; (2) the petition fee of $1,500; and (3) an adequate statement of unintentional delay.

The application is being referred to Technology Center AU 2814 for consideration of the amendment filed January 10, 2007.

Telephone inquiries concerning this decision should be directed to the undersigned at (571) 272-3204. Inquiries relating to further prosecution should be directed to the Technology Center.

Sherry D. Brinkley
Petitions Examiner
Office of Petitions

UNITED STATES PATENT AND TRADEMARK OFFICE

Commissioner for Patents
United States Patent and Trademark Office
P.O. Box 1450
Alexandria, VA 22313-1450
www.uspto.gov

OCT 19 2004

DALINA LAW GROUP, P.C.
7910 IVANHOE AVE. #325
LA JOLLA CA 92037

In re Application of	:	
Rodnunsky et al.	:	
Serial No.: 10/709,944	:	DECISION ON PETITION
Filed: June 8, 2004	:	
For: System and Method for Facilitating	:	
Fluid Three-Dimensional Movement of an	:	
Object Via Directional Force	:	

This is in response to the petition applicant filed on July 15, 2004 to make the above-identified application special under the provisions of 37 CFR 1.102(d).

Applicant has satisfied the provisions set forth in M.P.E.P. 708.02, VIII, thus the petition is **GRANTED**.

The application will be forwarded to the examiner for action on the merits commensurate with this decision.

Should there be any questions with regard to this letter please contact John Kittle by letter addressed to the Director, Technology Center 3700/2900, P.O. Box 1450 Alexandria, VA 22313-1450, or by telephone at (703) 308-0873 or by facsimile transmission at (703) 308-3139.

John E. Kittle
Director
Technology Center 3700/2900

UNITED STATES PATENT AND TRADEMARK OFFICE

UNITED STATES DEPARTMENT OF COMMERCE
United States Patent and Trademark Office
Address: COMMISSIONER FOR PATENTS
P.O. Box 1450
Alexandria, Virginia 22313-1450
www.uspto.gov

APPLICATION NO.	FILING DATE	FIRST NAMED INVENTOR	ATTORNEY DOCKET NO.	CONFIRMATION NO.
10/709,965	06/09/2004	Philip Lieberman	60748.300101	8735

74029 7590 02/26/2009

Patent Venture Group
10788 Civic Center Drive, Suite 215
Rancho Cucamonga, CA 91730-3805

EXAMINER	
JUNG, DAVID YIUK	

ART UNIT	PAPER NUMBER
2434	

MAIL DATE	DELIVERY MODE
02/26/2009	PAPER

Please find below and/or attached an Office communication concerning this application or proceeding.

The time period for reply, if any, is set in the attached communication.

Commissioner for Patents
United States Patent and Trademark Office
P.O. Box 1450
Alexandria, VA 22313-1450
www.uspto.gov

MAILED

FEB 26 2009

TECHNOLOGY CENTER 2100

Raymond E. Roberts
Patent Venture Group
10788 Civic Center Drive, Suite 215
Rancho Cucamonga, California 91730-3805

In re Application of:
Philip Lieberman
Application No. 10/709,965
Filed: June 09, 2004
For: System for Selective Disablement and Locking Out of Computer System Objects

DECISION ON PETITION

This is a decision on the petition filed November 03, 2008 requesting that the previous decision to dismiss Applicant's petition to be reconsidered.

The relevant portion of MPEP § 201.03 states:

> Although 37 CFR 1.48 does not contain a diligence requirement for filing the request, once an inventorship error is discovered, timeliness requirements under 37 CFR 1.116 and 37 CFR 1.312 apply. For allowed applications where the issue fee has been paid prior to the entry of a request under 37 CFR 1.48, if the request under 37 CFR 1.48 is dismissed or denied in an Office action, the application must be withdrawn from issue so that applicant would be given time to correct the defect(s). If the request under 37 CFR 1.48 is granted, then it would not be necessary to withdraw the application from issue.

In support of the petition, the Applicant provided copies of the two individual inventor assignments, the Recordation Form Cover Sheet and the Notice of Recordation issued by the Office as previously requested.

For the above-stated reasons, the petition is **Granted**.

Any inquiry concerning this decision should be directed to Tod Swann at (571) 272-3612.

Tod Swann
Technology Center 2400

UNITED STATES PATENT AND TRADEMARK OFFICE

COMMISSIONER FOR PATENTS
UNITED STATES PATENT AND TRADEMARK OFFICE
P.O. BOX 1450
ALEXANDRIA, VA 22313-1450
www.uspto.gov

AUG - 1 2006

In re Application of KANEKO, RYOJI
Appl. No.: 10/709,971
Filed: June 10, 2004
For: BRUSH TYPE DC ELECTRIC MOTOR

PETITION TO ENTER AMENDMENT AFTER FINAL REJECTION
37 CFR 1.181

This is in response to applicant's petition filed 12/20/05, and re-filed on 3/19/06, requesting that the examiner be directed to enter the amendment after final rejection filed 12/5/05.

Applicants' petition is DENIED.

Petitioner states that the examiner, in the Final Rejection mailed 9/20/05, for the first time stated his reading of claim 1 as "the flow through each coil was in opposite directions 'upon rotation'". Petitioner argues that the amendment filed 12/5/05, which added that this opposite flow was "instantaneous", would overcome the prior art made of record, or at least simplify issues for appeal. The examiner, in an Advisory Action mailed 12/19/05, stated that the addition of "instantaneous" to the claims was a new issue that would require further consideration and/or search, and declined to enter the amendment.

As the petitioner is not arguing the propriety of the finality of the office action mailed 9/20/05, the only question is whether the amendment of 12/5/05 should be entered. A review of the record shows that the desired changes do, in fact, alter the scope of the claimed invention and create a new issue requiring further search and consideration. As such, the examiner properly denied entry of the amendment, as noted in the aforementioned Advisory Action.

Inquiries concerning this decision should be directed to Supervisory Patent Examiner Darren Schuberg at (571) 272-2044.

Richard Seidel
Director
Patent Examining Technology Center 2800

ERNEST A. BEUTLER, ATTORNEY AT LAW
10 RUE MARSEILLE
NEWPORT BEACH, CA 92660

UNITED STATES PATENT AND TRADEMARK OFFICE

Commissioner for Patents
United States Patent and Trademark Office
P.O. Box 1450
Alexandria, VA 22313-1450
www.uspto.gov

082006

ERNEST A. BEUTLER, ATTORNEY AT LAW
10 RUE MARSEILLE
NEWPORT BEACH CA 92660

SEP - 2 2006

In re Application of:
Ryoji Kaneko et al.
Serial No.: 10/709,971
Filed: June 10, 2004
Attorney Docket No.: SIMTEK6915

DECISION ON PETITION
TO ACCEPT PAPERS AS BEING TIMELY
FILED

This is a decision on the petition filed on August 7, 2006, requesting that the accompanied appeal brief and appeal brief fee be accepted as being timely filed.

The petition is DENIED.

Petitioner asserts that because there was a delay in rendering a decision on petition, petitioner could not timely file the appeal brief because petitioner "had no idea what form the claims would take."

A review of the file record indicates that a Final Office action was mailed on September 20, 2005. An Amendment After Final Rejection was filed December 05, 2005. An Advisory Action was mailed on December 19, 2005, refusing entry of the amendment because it raised a new issue that required further consideration and/or search. On December 20, 2005, petitioner timely filed a Notice of Appeal and a petition seeking supervisory authority review and directing the examiner to enter the Amendment After Final Rejection. A renewed/supplemental petition was filed March 19, 2006. The petition was treated under 37 C.F.R. § 1.181 and was denied in decision mailed August 1, 2006. An appeal brief was filed on August 7, 2006, along with the instant petition.

Pursuant to 37 C.F.R. § 41.37, an appeal brief must be filed within two months of the date of the filing of the Notice of Appeal. This time period is extendable under 37 C.F.R. § 1.136(a). For the instant application, the appeal brief must have been filed no later than July 20, 2006 along with a petition for the maximum available extension of time and fees therefor. The appeal brief was filed on August 7, 2006, after the maximum extendable time period had expired.

Pursuant to 37 C.F.R. § 1.181(f): "The mere filing of a petition will not stay any period for reply that may be running against the application, nor act as a stay of other proceedings. Any petition under this part not filed within two months of the mailing date of the action or notice from which

relief is requested may be dismissed as untimely, except as otherwise provided. This two-month period is not extendable."

While it is regrettable that a decision was not promptly rendered, the filing of the petition did not toll the time for filing the appeal brief pursuant to 37 C.F.R. § 1.181(f). As such, it is incumbent upon an applicant to take steps to ensure against abandoning of his/her application. The appeal brief was filed after the time for filing the appeal brief had expired.

Pursuant to M.P.E.P. § 1205.01, the failure to timely file an appeal brief results in the appeal being dismissed and the application becoming abandoned by operation of law when there is no allowable claim. In the instant application, claims 1-22, all the claims that were pending in the application, were finally rejected and appealed. Since the appeal brief was untimely and there was no allowed claim, this application became abandoned after February 20, 2006. The appeal brief cannot be accepted until and unless the application is revived.

For the above stated reasons, the petition is denied.

Petitioner may wish to consider filing a petition under 37 C.F.R. § 1.137 (a) or (b) to revive the application.

Any request for reconsideration of this decision must be submitted within 2 (two) months of the date of this decision in order to be considered timely.

Any inquiry regarding this decision should be directed to Hien H. Phan, Special Program Examiner, at (571) 272-1606.

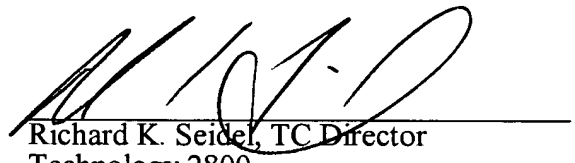

Richard K. Seidel, TC Director
Technology 2800
Semiconductors, Electrical and Optical
Systems and Components

UNITED STATES PATENT AND TRADEMARK OFFICE

Commissioner for Patents
United States Patent and Trademark Office
P.O. Box 1450
Alexandria, VA 22313-1450
www.uspto.gov

Paper No.

COPY MAILED

DEC 10 2007

OFFICE OF PETITIONS

ERNEST A. BEUTLER, ATTORNEY AT LAW
10 RUE MARSEILLE
NEWPORT BEACH CA 92660

In re Application of :
Ryoji Kaneko :
Application No. 10/709,971 : DECISION ON PETITIONS
Filed: June 10, 2004 : PURSUANT TO 37 C.F.R.
Attorney Docket Number: : §§ 1.137(A), AND 1.137(B)
SIMTEK6915 :
Title: BRUSH TYPE DC ELECTRIC :
MACHINE :

On September 9, 2006, Petitioner presented a submission, which is properly treated as a petition pursuant to 37 C.F.R. § 1.181 to review a decision of a Technology Center Director, as well as petitions pursuant to 37 C.F.R. § 1.137(a)[1] and 37 C.F.R. § 1.137(b)[2] to revive the above-identified application.

---

1 A grantable petition pursuant to 37 C.F.R. § 1.137(a) must be accompanied by:

(1) The reply required to the outstanding Office action or notice, unless previously filed;
(2) The petition fee as set forth in 37 C.F.R. § 1.17(l);
(3) A showing to the Commissioner that the entire delay in filing the required reply from the due date for the reply until the filing of a grantable petition was unavoidable;
(4) Any terminal disclaimer (and fee as set forth in 37 C.F.R. § 1.20(d)) required pursuant to paragraph (d) of this section.

2 A grantable petition pursuant to 37 CFR 1.137(b) must be accompanied by:

(1) The reply required to the outstanding Office action or notice, unless previously filed;
(2) The petition fee as set forth in § 1.17(m);
(2) A statement that the entire delay in filing the required reply from the due date for the reply until the filing of a grantable petition pursuant to this paragraph was unintentional. The Commissioner may require additional information where there is a question whether the delay was unintentional, and;

Duplicate copies of this submission were submitted on September 10, 2006 and November 3, 2006.

This is a decision on the petitions pursuant to 37 C.F.R. §§ 1.137(a) and (b). A decision on the petition pursuant to 37 C.F.R. § 1.181 will be mailed under separate cover.

The Office regrets the period of delay in issuing this decision.

The petition pursuant to 37 C.F.R. § 1.137(a) is **DISMISSED**.

The petition pursuant to 37 C.F.R. § 1.137(b) is **DISMISSED**.

A discussion follows.

Background

The above-identified application became abandoned for failure to submit an Appeal Brief within two-months of the filing of a Notice of Appeal, filed on December 20, 2005. An Appeal Brief was received on August 7, 2006 along with the required fee. No extensions of time pursuant to 37 C.F.R. §1.136(a) were received. Accordingly, the above-identified application became abandoned on February 21, 2006. A Notice of Abandonment was mailed on September 5, 2006.

The Relevant Portions of the C.F.R. and M.P.E.P.

37 C.F.R. § 1.181(f) sets forth, *in toto*:

> The mere filing of a petition will not stay any period for reply that may be running against the application, nor act as a stay of other proceedings. Any petition under this part not filed within two months of the mailing date of the action or notice from which relief is requested may be dismissed as untimely, except as otherwise provided. This two-month period is not extendable.

37 C.F.R. § 1.134 sets forth, *in toto*:

> An Office action will notify the applicant of any non-statutory or shortened statutory time period set for reply to an Office action. Unless the applicant is notified in writing that a reply is required in less than six months, a maximum period of six months is allowed.

---

(3) Any terminal disclaimer (and fee as set forth in § 1.20(d)) required pursuant to paragraph (d) of this section.

37 C.F.R. § 1.135 sets forth, *in toto*:

(a) If an applicant of a patent application fails to reply within the time period provided under § 1.134 and § 1.136, the application will become abandoned unless an Office action indicates otherwise.
(b) Prosecution of an application to save it from abandonment pursuant to paragraph (a) of this section must include such complete and proper reply as the condition of the application may require. The admission of, or refusal to admit, any amendment after final rejection or any amendment not responsive to the last action, or any related proceedings, will not operate to save the application from abandonment.
(c) When reply by the applicant is a bona fide attempt to advance the application to final action, and is substantially a complete reply to the non-final Office action, but consideration of some matter or compliance with some requirement has been inadvertently omitted, applicant may be given a new time period for reply under § 1.134 to supply the omission.

37 C.F.R. § 1.136(a)(1) sets forth, *in toto*:

(1) If an applicant is required to reply within a nonstatutory or shortened statutory time period, applicant may extend the time period for reply up to the earlier of the expiration of any maximum period set by statute or five months after the time period set for reply, if a petition for an extension of time and the fee set in § 1.17(a) are filed, unless:
(i) Applicant is notified otherwise in an Office action;
(ii) The reply is a reply brief submitted pursuant to § 41.41 of this title;
(iii) The reply is a request for an oral hearing submitted pursuant to § 41.47(a) of this title;
(iv) The reply is to a decision by the Board of Patent Appeals and Interferences pursuant to § 1.304 or to § 41.50 or § 41.52 of this title; or
(v) The application is involved in a contested case (§ 41.101(a) of this title).
(2) The date on which the petition and the fee have been filed is the date for purposes

37 C.F.R. § 41.37(a)(1) sets forth, *in toto:*

Appellant must file a brief under this section within two months from the date of filing the notice of appeal under § 41.31.

M.P.E.P. § 1205.01 sets forth, *in pertinent part*:

37 CFR 41.37(a) provides 2 months from the date of the notice of appeal for the appellant to file an appeal brief and the appeal brief fee set forth in 37 CFR 41.20(b)(2). In an ex parte reexamination proceeding, the time period can be extended only under the provisions of 37 CFR 1.550(c). See also MPEP § 2274.

The usual period of time in which appellant must file his or her brief is 2 months from the date of appeal. The Office date of receipt of the notice of appeal (and not the date indicated on any Certificate of Mailing under 37 CFR 1.8) is the date from which this 2-month time period is measured. See MPEP § 512. If the notice of appeal is filed in accordance with 37 CFR 1.10 using

the "Express Mail Post Office to Addressee" service of the United States Postal Service (USPS), the date of deposit with the USPS is the date from which this 2-month time period is measured because the date of deposit shown by the "date in" on the "Express Mail" label or other official USPS notation is considered to be the date of receipt. See MPEP § 513.

ANALYSIS OF THE PETITIONS PURSUANT TO 37 C.F.R. §§ 1.137(A) AND 1.137(B)

Petition fee requirement

The fee for filing a petition to revive an unavoidably abandoned application under 37 C.F.R. § 1.137(a) is set forth in 37 C.F.R. § 1.17(l) as being $510 for a large entity and $255 for a small entity.

The fee for filing a petition to revive an unintentionally abandoned application under 37 C.F.R. § 1.137(b) is set forth in 37 C.F.R. § 1.17(m) as being $1,540 for a large entity and $770 for a small entity.

There is no record of any fee having been received along with either of these petitions, and the electronic file does not appear to contain an authorization to charge any deficiencies to a Deposit Account. Therefore, the second requirement of both 37 C.F.R. §§ 1.137(a) and 1.137(b) has not been met.

It is noted that Petitioner has requested the waiver of the fee that is associated with the filing of the petition pursuant to 37 C.F.R. § 1.137(a). This request cannot be granted however, as the payment of the required petition fee is a prerequisite to the filing of a petition to revive under 37 C.F.R. § 1.137. Therefore, consideration of the merits of the petition before receipt of the filing fee would be premature. See M.P.E.P. 711.03(c)(III)(B)[3]

---

3 "...[T]he payment of a petition fee to obtain the revival of an abandoned application is a statutory prerequisite to revival of the abandoned application and cannot be waived. In addition, the phrase '[o]n filing' in 35 U.S.C. §41(a)(7) means that the petition fee is required for the filing (and not merely the grant) of a petition under 37 C.F.R. §1.137. See H.R. Rep. No. 542, 97th Cong., 2nd Sess. 6 (1082), *reprinted in* 1982 U.S.C.C.A.N. 770 ('[t]he fees set forth in this section are due on filing the petition'). Therefore, the Office...will not reach the merits of any petition under 37 C.F.R. § 1.137 lacking the requisite petition fee."

CONCLUSION

Any reply must be submitted within **TWO MONTHS** from the mail date of this decision. Extensions of time under 37 C.F.R. § 1.136(a) are permitted. The reply should include a cover letter entitled "Renewed Petition Under 37 C.F.R. §§ 1.137(a) and/or 1.137(b)." This is not a final agency action within the meaning of 5 U.S.C § 704.

Any submission in response to this decision should indicate in a prominent manner that the attorney handling this matter is Paul Shanoski, and may be submitted by mail[4], hand-delivery[5], or facsimile[6]. Registered users of EFS-Web may alternatively submit a response to this decision via EFS-Web[7].

If responding by mail, Petitioner is advised not to place the name of the deciding official on the envelope. Only the information that appears in the footnote should be included - adding anything else to the address will delay the delivery of the response to the decision maker.

Telephone inquiries regarding *this decision* should be directed to Senior Attorney Paul Shanoski at (571) 272-3225[8]. All other inquiries concerning examination procedures or status of the application should be directed to the Technology Center.

/Paul Shanoski/
Paul Shanoski
Senior Attorney
Office of Petitions

---

4 Mail Stop Petition, Commissioner for Patents, United States Patent and Trademark Office, P.O. Box 1450, Alexandria, VA, 22313-1450.
5 Customer Window, Randolph Building, 401 Dulaney Street, Alexandria, VA, 22314.
6 (571) 273-8300- please note this is a central facsimile number.
7 https://sportal.uspto.gov/authenticate/authenticateuserlocalepf.html
8 Petitioner will note that all practice before the Office should be in writing, and the action of the Office will be based exclusively on the written record in the Office. See 37 C.F.R. § 1.2. As such, Petitioner is reminded that no telephone discussion may be controlling or considered authority for any further action(s) of Petitioner.

UNITED STATES PATENT AND TRADEMARK OFFICE

Commissioner for Patents
United States Patent and Trademark Office
P.O. Box 1450
Alexandria, VA 22313-1450
www.uspto.gov

Paper No.

COPY MAILED

DEC 10 2007

OFFICE OF PETITIONS

ERNEST A. BEUTLER, ATTORNEY AT LAW
10 RUE MARSEILLE
NEWPORT BEACH CA 92660

In re Application of	:	
Ryoji Kaneko	:	
Application No. 10/709,971	:	DECISION ON PETITION
Filed: June 10, 2004	:	PURSUANT TO
Attorney Docket Number:	:	37 C.F.R. § 1.181
SIMTEK6915	:	
Title: BRUSH TYPE DC ELECTRIC	:	
MACHINE	:	

On September 9, 2006, Petitioner presented a submission, which is properly treated as a petition pursuant to 37 C.F.R. § 1.181 to review a decision of a Technology Center Director, as well as petitions pursuant to 37 C.F.R. § 1.137(a) and 37 C.F.R. § 1.137(b) to revive the above-identified application. Duplicate copies of this submission were submitted on September 10, 2006 and November 3, 2006.

This is a decision on the petition pursuant to 37 C.F.R. § 1.181. A decision on the petition pursuant to 37 C.F.R. §§ 1.137(a) and 137(b) will be mailed under separate cover.

The Office regrets the period of delay in issuing this decision.

The petition pursuant to 37 C.F.R. § 1.181 is **DISMISSED.**

A discussion follows.

Background

The above-identified application became abandoned for failure to submit an Appeal Brief within two-months of the filing of a Notice of Appeal, filed on December 20, 2005. An Appeal Brief

was received on August 7, 2006 along with the required fee. No extensions of time pursuant to 37 C.F.R. §1.136(a) were received. Accordingly, the above-identified application became abandoned on February 21, 2006. A Notice of Abandonment was mailed on September 5, 2006.

The Relevant Portions of the C.F.R. and M.P.E.P.

37 C.F.R. § 1.181(f) sets forth, *in toto*:

The mere filing of a petition will not stay any period for reply that may be running against the application, nor act as a stay of other proceedings. Any petition under this part not filed within two months of the mailing date of the action or notice from which relief is requested may be dismissed as untimely, except as otherwise provided. This two-month period is not extendable.

37 C.F.R. § 1.134 sets forth, *in toto*:

An Office action will notify the applicant of any non-statutory or shortened statutory time period set for reply to an Office action. Unless the applicant is notified in writing that a reply is required in less than six months, a maximum period of six months is allowed.

37 C.F.R. § 1.135 sets forth, *in toto*:

(a) If an applicant of a patent application fails to reply within the time period provided under § 1.134 and § 1.136, the application will become abandoned unless an Office action indicates otherwise.
(b) Prosecution of an application to save it from abandonment pursuant to paragraph (a) of this section must include such complete and proper reply as the condition of the application may require. The admission of, or refusal to admit, any amendment after final rejection or any amendment not responsive to the last action, or any related proceedings, will not operate to save the application from abandonment.
(c) When reply by the applicant is a bona fide attempt to advance the application to final action, and is substantially a complete reply to the non-final Office action, but consideration of some matter or compliance with some requirement has been inadvertently omitted, applicant may be given a new time period for reply under § 1.134 to supply the omission.

37 C.F.R. § 1.136(a)(1) sets forth, *in toto*:

(1) If an applicant is required to reply within a nonstatutory or shortened statutory time period, applicant may extend the time period for reply up to the earlier of the expiration of any maximum period set by statute or five months after the time period set for reply, if a petition for an extension of time and the fee set in § 1.17(a) are filed, unless:
(i) Applicant is notified otherwise in an Office action;
(ii) The reply is a reply brief submitted pursuant to § 41.41 of this title;
(iii) The reply is a request for an oral hearing submitted pursuant to

§ 41.47(a) of this title;
(iv) The reply is to a decision by the Board of Patent Appeals and Interferences pursuant to § 1.304 or to § 41.50 or § 41.52 of this title; or
(v) The application is involved in a contested case (§ 41.101(a) of this title).
(2) The date on which the petition and the fee have been filed is the date for purposes

37 C.F.R. § 41.37(a)(1) sets forth, *in toto:*

Appellant must file a brief under this section within two months from the date of filing the notice of appeal under § 41.31.

M.P.E.P. § 1205.01 sets forth, *in pertinent part*:

37 CFR 41.37(a) provides 2 months from the date of the notice of appeal for the appellant to file an appeal brief >and the appeal brief fee set forth in 37 CFR 41.20(b)(2). In an ex parte reexamination proceeding, the time period can be extended only under the provisions of 37 CFR 1.550(c). See also MPEP § 2274.

The usual period of time in which appellant must file his or her brief is 2 months from the date of appeal. The Office date of receipt of the notice of appeal (and not the date indicated on any Certificate of Mailing under 37 CFR 1.8) is the date from which this 2-month time period is measured. See MPEP § 512. If the notice of appeal is filed in accordance with 37 CFR 1.10 using the "Express Mail Post Office to Addressee" service of the United States Postal Service (USPS), the date of deposit with the USPS is the date from which this 2-month time period is measured because the date of deposit shown by the "date in" on the "Express Mail" label or other official USPS notation is considered to be the date of receipt. See MPEP § 513.

ANALYSIS OF THE PETITION PURSUANT TO 37 C.F.R. § 1.181

The Office mailed a final Office action on September 20, 2005, which set a shortened statutory period for reply of three months. An after-final amendment was received on December 5, 2005, and an advisory action was mailed on December 19, 2005. On December 20, 2005, Applicant concurrently submitted a notice of appeal along with the associated fee, as well as a petition requesting that the Commissioner "exercise his supervisory authority and direct the Examiner to enter the amendment filed by fax on December 5, 2005."

Pursuant to 37 C.F.R. § 41.37(a)(1), Applicant was required to submit an appeal brief no later than February 20, 2005. Extensions of time were available, up to five months, pursuant to Rule § 1.136(a). Consequently, the maximum extendable period for response expired on July 20, 2005 at midnight.

On March 19, 2006, Applicant submitted a second petition, which was substantially identical to that which was submitted on December 20, 2005.

The Office mailed a decision on the petitions of December 20, 2005 and March 19, 2006 on August 1, 2006, and indicated that Petitioner's request was "denied," as the proposed amendment would "alter the scope of the claimed invention and create a new issue requiring further search and consideration."

On August 7, 2006, Applicant submitted an Appeal Brief along with the associated fee. However, as indicated above, the Appeal Brief was due no later than February 20, 2006[1]. The present application went abandoned for failure to timely submit the Appeal Brief.

On August 7, 2006, Applicant also filed a "request to consider attached appeal brief and brief fee as being timely filed," which was denied by the Office via the mailing of a decision on September 2, 2006.

With the present petition, Petitioner has set forth "before the decision on August 1, 2006, the undersigned earnestly believed the Office would act honorably and enter the amendment[2]."

As such, it appears that Petitioner submitted a notice of appeal, yet failed to submit the required appeal brief in a timely manner due to his belief that an appeal brief would not be necessary since the Technology Center Director was expected to grant his request to direct the Examiner to enter the after-final amendment.

The decision of September 2, 2006 indicated:

- "pursuant to 37 C.F.R. § 41.37(a)(1), an appeal brief must be filed within two months of the date of the filing of the Notice of Appeal;"
- Rule § 1.181(f) makes it clear that "the mere filing of a petition will not stay any period for reply that may be running against the application;"
- pursuant to M.P.E.P. § 1205.01, "the failure to timely file an appeal brief results in the appeal being dismissed and

---

1 Applicant had the option of purchasing up to a five-month extension of time, which would have permitted him to submit the Appeal Brief as late as July 20, 2006, however it does not appear that any extensions of time were requested.

2 Petition, page 2.

the application becoming abandoned by operation of law when there is no allowable claim," and

- "…claims 1-22, all the claims that were pending in the application, were finally rejected and appealed."

With the filing of the present petition, nothing has changed. Applicant submitted a notice of appeal, and failed to submit the required appeal brief within two months. Rule § 41.37(a)(1) and M.P.E.P. § 1205.01 each clearly indicates that an application will go abandoned if an appeal brief is not filed within two months. Applicant failed to take the appropriate step that was required to ensure against the abandonment of this application: the filing of an appeal brief while the petitions of December 20, 2005 and March 19, 2006 were pending. Instead, Applicant allowed this period of time to expire, and did not intend to file an appeal brief prior to the issuance of a decision from the Director of the Technology Center on his request for the Examiner to be directed to enter the after-final amendment of December 5, 2005.

The September 2, 2006 decision of the Technology Center Director has been reviewed. The Technology Center Director correctly indicated that pursuant to 37 C.F.R. § 41.37(a)(1), an applicant must file an appeal brief within two months of the submission of a notice of appeal, or else the application will go abandoned by operation of law. This decision further correctly indicated that pursuant to 37 C.F.R. § 1.181(f), the mere filing of a petition will not stay any period for response that may be running against the application, and as such, Petitioner was bound by the requirements of 37 C.F.R. § 41.37(a)(1), despite the fact that along with the notice of appeal, he had concurrently filed a petition requesting that the Examiner be directed to enter the after-final amendment. Finally, the decision correctly set forth the consequences of Applicant's decision to refrain from filing an appeal brief until a decision on his petition had been rendered: "pursuant to M.P.E.P. § 1205.01, the failure to timely file an appeal brief results in the appeal being dismissed and the application becoming abandoned by operation of law…"

The Deputy Commissioner for Patent Examination Policy has reviewed the September 2, 2006 decision of the Technology Center Director, and no clear error has been found.

CONCLUSION

Any reply must be submitted within **TWO MONTHS** from the mail date of this decision. Extensions of time under 37 C.F.R. § 1.136(a) are permitted. The reply should include a cover letter entitled "Renewed Petition Under 37 C.F.R. § 1.181." This is not a final agency action within the meaning of 5 U.S.C § 704.

Notice

After the filing of a renewed petition pursuant to 37 C.F.R. § 1.181, thereafter, there will be no further reconsideration of this matter[3, 4].

Any submission in response to this decision should indicate in a prominent manner that the attorney handling this matter is Paul Shanoski, and may be submitted by mail[5], hand-delivery[6], or facsimile[7]. Registered users of EFS-Web may alternatively submit a response to this decision via EFS-Web[8].

If responding by mail, Petitioner is advised not to place the name of the deciding official on the envelope. Only the information that appears in the footnote should be included - adding anything else to the address will delay the delivery of the response to the decision maker.

---

3 For more than a century, punctuality and due diligence, equally with good faith, have been deemed essential requisites to the success of those who seek to obtain the special privileges of the patent law, and they are demanded in the interest of the public and for the protection of rival inventors. See: Porter v. Louden, 7 App.D.C. 64 (C.A.D.C. 1895), citing Wollensak v. Sargent, 151 U.S. 221, 228, 38 L. Ed. 137, 14 S. Ct. 291 (1894). An invention benefits no one unless it is made public, and the rule of diligence should be so applied as to encourage reasonable promptness in conferring this benefit upon the public. Automatic Electric Co. v. Dyson, 52 App. D.C. 82; 281 F. 586 (C.A.D.C. 1922). Generally, 35 U.S.C. §6; 37 C.F.R.§§1.181, 182, 183.

4 If, on the second request for reconsideration, Petitioner fails to satisfy the showings burden required: (a) the resulting decision may be one viewed as final agency action; and (b) provisions for reconsideration, such as those at 37 C.F.R. §1.137(e), will not apply to that decision.

5 Mail Stop Petition, Commissioner for Patents, United States Patent and Trademark Office, P.O. Box 1450, Alexandria, VA, 22313-1450.

6 Customer Window, Randolph Building, 401 Dulaney Street, Alexandria, VA, 22314.

7 (571) 273-8300- please note this is a central facsimile number.

8 https://sportal.uspto.gov/authenticate/authenticateuserlocalepf.html

Telephone inquiries regarding *this decision* should be directed to Senior Attorney Paul Shanoski at (571) 272-3225[9]. All other inquiries concerning examination procedures or status of the application should be directed to the Technology Center.

John Love
Deputy Commissioner for Patent Examination Policy

9 Petitioner will note that all practice before the Office should be in writing, and the action of the Office will be based exclusively on the written record in the Office. See 37 C.F.R. § 1.2. As such, Petitioner is reminded that no telephone discussion may be controlling or considered authority for any further action(s) of Petitioner.

UNITED STATES PATENT AND TRADEMARK OFFICE

Commissioner for Patents
United States Patent and Trademark Office
P.O. Box 1450
Alexandria, VA 22313-1450
www.uspto.gov

NOVAK DRUCE & QUIGG, LLP
1300 EYE STREET NW
400 EAST TOWER
WASHINGTON DC 20005

COPY MAILED

MAR 17 2006

OFFICE OF PETITIONS

In re Application of :
Anders et al. :
Application No. 10/709,983 : DECISION ON PETITION
Filed: June 10, 2004 :
Attorney Dkt No.: 7589.178.PCUS000 :

This is a decision on the petition under 37 CFR 1.137(b), filed January 4, 2006, to revive the above-identified application.

This above-identified application became abandoned for failure to file a reply to a non-final Office Action mailed February 7, 2005. The non-final Office Action set a three (3) month shortened statutory period for reply. No extensions of time were obtained under the provisions of 37 CFR §1.136(a). Accordingly, this application became abandoned on May 8, 2005. A Notice of Abandonment was mailed on August 25, 2005.

This petition is hereby **GRANTED**.

The Office hereby acknowledges the receipt of the amendment submitted with the instant petition.

This application is being forwarded to Technology Center 3700 for further processing.

Telephone inquiries concerning this matter should be directed to the undersigned at (571) 272-3215.

Charlema R. Grant

Charlema R. Grant
Petitions Attorney
Office of Petitions

UNITED STATES PATENT AND TRADEMARK OFFICE

Commissioner for Patents
United States Patent and Trademark Office
P.O. Box 1450
Alexandria, VA 22313-1450
www.uspto.gov

MAILED

APR 29 2010

OFFICE OF PETITIONS

NUTTER MCCLENNEN & FISH LLP
SEAPORT WEST
155 SEAPORT BOULEVARD
BOSTON, MA 02210-2604

In re Application of
Mark A. Johanson, et al.
Application No. 10/709,997
Filed: June 11, 2004
Attorney Docket No. 22956-302 (MIT-169CON)

: DECISION ON PETITION
: UNDER 37 CFR 1.78(a)(3)

This is a decision on the petition under 37 CFR 1.78(a)(3), filed February 17, 2010, to accept an unintentionally delayed claim under 35 U.S.C. § 120 for the benefit of priority to the prior-filed nonprovisional applications set forth in the amendment filed with the petition.

The petition is **GRANTED**.

A petition for acceptance of a claim for late priority under 37 CFR 1.78(a)(3) is only applicable to those applications filed on or after November 29, 2000. Further, the petition is appropriate only after the expiration of the period specified in 37 CFR 1.78(a)(2)(ii). In addition, the petition under 37 CFR 1.78(a)(3) must be accompanied by:

(1) the reference required by 35 U.S.C. § 120 and 37 CFR 1.78(a)(2)(i) of the prior-filed application, unless previously submitted;

(2) the surcharge set forth in § 1.17(t); and

(3) a statement that the entire delay between the date the claim was due under 37 CFR 1.78(a)(2)(ii) and the date the claim was filed was unintentional. The Director may require additional information where there is a question whether the delay was unintentional.

All of the above requirements having been satisfied, the late claim for priority under 35 U.S.C. § 120 is accepted as being unintentionally delayed.

The granting of the petition to accept the delayed benefit claim to the prior-filed applications under 37 CFR 1.78(a)(3) should not be construed as meaning that this application is entitled to the benefit of the prior-filed applications. In order for this application to be entitled to the benefit of the prior-filed applications, all other requirements under 35 U.S.C. § 120 and 37 CFR 1.78(a)(1) and (a)(2) must be met. Similarly, the fact that the corrected Filing Receipt accompanying this decision on petition includes the prior-filed applications should not be construed as meaning that applicant is entitled to the claim for benefit of priority to the prior-filed applications noted thereon. Accordingly, the examiner will, in due course, consider this benefit claim and determine whether the application is entitled to the benefit of the earlier filing date.

A corrected Filing Receipt, which includes the priority claim to the prior-filed nonprovisional applications, accompanies this decision on petition.

Any inquiries concerning this decision may be directed to April M. Wise at (571) 272-1642. All other inquiries concerning either the examination procedures or status of the application should be directed to the Technology Center.

This application is being forwarded to Technology Center Art Unit 3773 for consideration by the examiner of applicant's entitlement to claim benefit of priority under 35 U.S.C. § 120 to the prior-filed applications.

/dab/
David Bucci
Petitions Examiner
Office of Petitions

ATTACHMENT: Corrected Filing Receipt

UNITED STATES PATENT AND TRADEMARK OFFICE

UNITED STATES DEPARTMENT OF COMMERCE
United States Patent and Trademark Office
Address: COMMISSIONER FOR PATENTS
P.O. Box 1450
Alexandria, Virginia 22313-1450
www.uspto.gov

APPLICATION NUMBER	FILING or 371(c) DATE	GRP ART UNIT	FIL FEE REC'D	ATTY.DOCKET.NO	TOT CLAIMS	IND CLAIMS
10/709,997	06/11/2004	3773	982	22956-302 (MIT-169CON)	27	4

CONFIRMATION NO. 3996

CORRECTED FILING RECEIPT

21125
NUTTER MCCLENNEN & FISH LLP
SEAPORT WEST
155 SEAPORT BOULEVARD
BOSTON, MA 02210-2604

OC000000041333874

Date Mailed: 04/28/2010

Receipt is acknowledged of this non-provisional patent application. The application will be taken up for examination in due course. Applicant will be notified as to the results of the examination. Any correspondence concerning the application must include the following identification information: the U.S. APPLICATION NUMBER, FILING DATE, NAME OF APPLICANT, and TITLE OF INVENTION. Fees transmitted by check or draft are subject to collection. Please verify the accuracy of the data presented on this receipt. **If an error is noted on this Filing Receipt, please submit a written request for a Filing Receipt Correction. Please provide a copy of this Filing Receipt with the changes noted thereon. If you received a "Notice to File Missing Parts" for this application, please submit any corrections to this Filing Receipt with your reply to the Notice. When the USPTO processes the reply to the Notice, the USPTO will generate another Filing Receipt incorporating the requested corrections**

Applicant(s)

Mark A. Johanson, Littleton, MA;
Bill Barnes, Macon, GA;
Donald J. Rose, New York, NY;

Power of Attorney: None

Domestic Priority data as claimed by applicant

This application is a CON of 10/004,388 10/23/2001 PAT 6,767,354
which is a DIV of 09/118,680 07/17/1998 PAT 6,395,011

Foreign Applications

If Required, Foreign Filing License Granted: 07/15/2004

The country code and number of your priority application, to be used for filing abroad under the Paris Convention, is **US 10/709,997**

Projected Publication Date: Not Applicable

Non-Publication Request: No

Early Publication Request: No

Title

METHOD AND APPARATUS FOR HARVESTING AND IMPLANTING BONE PLUGS

Preliminary Class

606

PROTECTING YOUR INVENTION OUTSIDE THE UNITED STATES

Since the rights granted by a U.S. patent extend only throughout the territory of the United States and have no effect in a foreign country, an inventor who wishes patent protection in another country must apply for a patent in a specific country or in regional patent offices. Applicants may wish to consider the filing of an international application under the Patent Cooperation Treaty (PCT). An international (PCT) application generally has the same effect as a regular national patent application in each PCT-member country. The PCT process **simplifies** the filing of patent applications on the same invention in member countries, but **does not result** in a grant of "an international patent" and does not eliminate the need of applicants to file additional documents and fees in countries where patent protection is desired.

Almost every country has its own patent law, and a person desiring a patent in a particular country must make an application for patent in that country in accordance with its particular laws. Since the laws of many countries differ in various respects from the patent law of the United States, applicants are advised to seek guidance from specific foreign countries to ensure that patent rights are not lost prematurely.

Applicants also are advised that in the case of inventions made in the United States, the Director of the USPTO must issue a license before applicants can apply for a patent in a foreign country. The filing of a U.S. patent application serves as a request for a foreign filing license. The application's filing receipt contains further information and guidance as to the status of applicant's license for foreign filing.

Applicants may wish to consult the USPTO booklet, "General Information Concerning Patents" (specifically, the section entitled "Treaties and Foreign Patents") for more information on timeframes and deadlines for filing foreign patent applications. The guide is available either by contacting the USPTO Contact Center at 800-786-9199, or it can be viewed on the USPTO website at http://www.uspto.gov/web/offices/pac/doc/general/index.html.

For information on preventing theft of your intellectual property (patents, trademarks and copyrights), you may wish to consult the U.S. Government website, http://www.stopfakes.gov. Part of a Department of Commerce initiative, this website includes self-help "toolkits" giving innovators guidance on how to protect intellectual property in specific countries such as China, Korea and Mexico. For questions regarding patent enforcement issues, applicants may call the U.S. Government hotline at 1-866-999-HALT (1-866-999-4158).

LICENSE FOR FOREIGN FILING UNDER

Title 35, United States Code, Section 184

Title 37, Code of Federal Regulations, 5.11 & 5.15

GRANTED

The applicant has been granted a license under 35 U.S.C. 184, if the phrase "IF REQUIRED, FOREIGN FILING LICENSE GRANTED" followed by a date appears on this form. Such licenses are issued in all applications where the conditions for issuance of a license have been met, regardless of whether or not a license may be required as

set forth in 37 CFR 5.15. The scope and limitations of this license are set forth in 37 CFR 5.15(a) unless an earlier license has been issued under 37 CFR 5.15(b). The license is subject to revocation upon written notification. The date indicated is the effective date of the license, unless an earlier license of similar scope has been granted under 37 CFR 5.13 or 5.14.

This license is to be retained by the licensee and may be used at any time on or after the effective date thereof unless it is revoked. This license is automatically transferred to any related applications(s) filed under 37 CFR 1.53(d). This license is not retroactive.

The grant of a license does not in any way lessen the responsibility of a licensee for the security of the subject matter as imposed by any Government contract or the provisions of existing laws relating to espionage and the national security or the export of technical data. Licensees should apprise themselves of current regulations especially with respect to certain countries, of other agencies, particularly the Office of Defense Trade Controls, Department of State (with respect to Arms, Munitions and Implements of War (22 CFR 121-128)); the Bureau of Industry and Security, Department of Commerce (15 CFR parts 730-774); the Office of Foreign AssetsControl, Department of Treasury (31 CFR Parts 500+) and the Department of Energy.

NOT GRANTED

No license under 35 U.S.C. 184 has been granted at this time, if the phrase "IF REQUIRED, FOREIGN FILING LICENSE GRANTED" DOES NOT appear on this form. Applicant may still petition for a license under 37 CFR 5.12, if a license is desired before the expiration of 6 months from the filing date of the application. If 6 months has lapsed from the filing date of this application and the licensee has not received any indication of a secrecy order under 35 U.S.C. 181, the licensee may foreign file the application pursuant to 37 CFR 5.15(b).

UNITED STATES PATENT AND TRADEMARK OFFICE

Commissioner for Patents
United States Patent and Trademark Office
P.O. Box 1450
Alexandria, VA 22313-1450
www.uspto.gov

FURR LAW FIRM
2622 DEBOLT ROAD
UTICA OH 43080

COPY MAILED

NOV 1 0 2008

OFFICE OF PETITIONS

In re Application of :
David Lawrence Von Klleeck :
Application No. 10/710,008 : ON PETITION
Filed: June 11, 2004 :
Attorney Docket No. 001345 :

This is a decision on the petition under 37 CFR 1.137(b), filed on October 3, 2008 (Certificate of Mailing dated September 30, 2008), to revive the above-identified application.

The petition is **GRANTED**.

The above-identified application became abandoned for failure to timely file a proper reply to the final Office action mailed January 17, 2008. No reply having been received, the application became abandoned on April 18, 2008. A Notice of Abandonment was mailed on August 6, 2008.

On petition, petitioner paid the petition fee, made the proper statement of unintentional delay, and submitted the required reply in the form of a Notice of Appeal.

Please be advised that the two month period for filing an appeal brief (accompanied by the fee required by 37 CFR 1.17(c)) runs from the date of this decision.

The matter is being returned to Group Art Unit 2129 to await for applicant's submission of the appeal brief.

Telephone inquiries specific to this decision should be directed to the undersigned at (571)272-3207.

Cliff Congo
Petitions Attorney
Office of Petitions

UNITED STATES PATENT AND TRADEMARK OFFICE

UNITED STATES DEPARTMENT OF COMMERCE
United States Patent and Trademark Office
Address: COMMISSIONER FOR PATENTS
P.O. Box 1450
Alexandria, Virginia 22313-1450
www.uspto.gov

INTERNATIONAL BUSINESS MACHINES CORPORATION
DEPT. 18G
BLDG. 321-482
2070 ROUTE 52
HOPEWELL JUNCTION, NY 12533

Mail Date: 04/20/2010

Applicant	: David Pereira	: DECISION ON REQUEST FOR
Patent Number	: 7606341	: RECALCULATION of PATENT
Issue Date	: 10/20/2009	: TERM ADJUSTMENT IN VIEW
Appliction No	: 10/710,046	: OF WYETH AND NOTICE OF INTENT TO
Filed	: 06/15/2004	: ISSUE CERTIFICATE OF CORRECTION
		:

The Request for Recalculation is **GRANTED** to the extent indicated.

The patent term adjustment has been determined to be **895** days. The USPTO will *sua sponte* issue a certificate of correction reflecting the amount of PTA days determined by the recalculation.

Prior to the issuance of the certificate of correction, the USPTO will afford patentee an opportunity to be heard and request reconsideration. Accordingly, patentee has **one month or thirty (30) days**, whichever is longer, to file a request for reconsideration of this patent term adjustment calculation. See 35 U.S.C. 154(b)(3)(B)(ii) and 37 CFR 1.322(a)(4). No extensions of time will be granted under 37 CFR 1.136.

Patentee should use document code PET.OP if electronically filing a request for reconsideration of this patent term adjustment calculation. The patentee must also include the information required by 37 CFR 1.705(b)(2) and the fee required by 37 CFR 1.18(e). If patentee does not file a timely request for reconsideration of this patent term adjustment calculation including the information required by 37 CFR 1.705(b)(2) and the fee required by 37 CFR 1.18(e), the USPTO will issue a certificate of correction reflecting the PTA determination noted above.

Patentee should be aware that in order to preserve the right to review in the United States District Court for the District of Columbia of the USPTO patent term adjustment determination, patentee must ensure that he or she also take the steps required under 35 U.S.C. 154(b)(4)(A) in a timely manner. Nothing in the request for recalculation should be construed as providing an alternative time frame for commencing a civil action under 35 U.S.C. 154(b)(4)(A).

Any questions concerning this decision should be directed to the Office of Patent Legal Administration at 571-272-7702.

SPE RESPONSE FOR CERTIFICATE OF CORRECTION

Paper No.: _____

DATE : 9-19-06

TO SPE OF : ART UNIT 2881

SUBJECT : Request for Certificate of Correction for Appl. No.: 10/710051 Patent No.: 7078710

Please respond to this request for a certificate of correction within 7 days.

Please review the requested changes/corrections as shown in the **COCIN** document(s) in the IFW application image. No new matter should be introduced, nor should the scope or meaning of the claims be changed.

Check COCs.

Please complete the response (see below) and forward the completed response to scanning using document code **COCX**.

Certificates of Correction Branch

703-308-9390 ext. 117

Thank You For Your Assistance

The request for issuing the above-identified correction(s) is hereby:

Note your decision on the appropriate box.

☑ **Approved**	All changes apply.
☐ **Approved in Part**	Specify below which changes do not apply.
☐ **Denied**	State the reasons for denial below.

Comments: _____

SPE

2881
Art Unit

PTO/SB/44 (04-04)
Approved for use through 04/30/2007. OMB 0651-0033
U.S. Patent and Trademark Office; U.S. DEPARTMENT OF COMMERCE
Under the Paperwork Reduction Act of 1995, no persons are required to respond to a collection of information unless it displays a valid OMB control
(Also Form PTO-1050)

UNITED STATES PATENT AND TRADEMARK OFFICE
CERTIFICATE OF CORRECTION

PATENT NO : **7,078,710**

DATED : **July 18, 2006**

INVENTOR(S) : **Desai *et al.***

It is certified that error appears in the above-identified patent and that said Letters Patent is hereby corrected as shown below:

Column 8
Line 9, delete "both"

MAILING ADDRESS OF SENDER: **Jack P. Friedman, Ph.D.**
Reg. No. 44,688
Schmeiser, Olsen & Watts
22 Century Hill Drive, Suite 302
Latham, NY 12110

PATENT NO. 7,078,710

No. of additional copies

This collection of information is required by 37 CFR 1.322, 1.323, and 1.324. The information is required to obtain or retain a benefit by the public which is to file (and by the USPTO to process) an application. Confidentiality is governed by 35 U.S.C. 122 and 37 CFR 1.14. This collection is estimated to take 1.0 hour to complete, including gathering, preparing, and submitting the completed application form to the USPTO. Time will vary depending upon the individual case. Any comments on the amount of time you require to complete this form and/or suggestions for reducing the burden, should be sent to the Chief Information Officer, U.S. Patent and Trademark Office, U.S. Department of Commerce, P.O. Box 1450, Alexandria, VA 22313-1450. DO NOT SEND FEES OR COMPLETED FORMS TO THIS ADDRESS. **SEND TO: Attention Certificate of Corrections Branch, Commissioner for Patents, P.O. Box 1450, Alexandria, VA 22313-1450.**

If you need assistance in completing the form, call 1-800-PTO-9199 and select option 2.

UNITED STATES PATENT AND TRADEMARK OFFICE

Commissioner for Patents
United States Patent and Trademark Office
P.O. Box 1450
Alexandria, VA 22313-1450
www.uspto.gov

Schwegman, Lundberg, Woessner & Kluth, P.A.
P.O. Box 2938
Minneapolis, MN 55402

COPY MAILED

SEP 24 2007

OFFICE OF PETITIONS

In re Application of	:	
Michael A. Knopf	:	
Application No. 10/710,052	:	DECISION ON PETITION
Filed: June 15, 2004	:	TO WITHDRAW
Attorney Docket No. 5350-222 US	:	FROM RECORD
	:	

This is a decision on the Request to Withdraw as attorney or agent of record under 37 C.F.R. § 1.36(b), filed May 25, 2007.

The request is **NOT APPROVED** as moot.

A review of the file record indicates that the power of attorney to Schwegman, Lundberg, Woessner & Kluth, P.A. has been revoked by the assignee of the patent application on July 2, 2007. Accordingly, the request to withdraw under 37 C.F.R. § 1.36(b) is moot.

All future communications from the Office will continue to be directed to the below-listed address until otherwise notified by applicant.

Telephone inquires concerning this decision should be directed to Terri Williams at 571-272-2991.

T. Williams

Terri Williams
Petitions Examiner
Office of Petitions

cc: **Mathews, Shepherd, McKay & Bruneau, P.A.**
29 Thanet Road, Suite 201
Princeton, NJ 08540

UNITED STATES PATENT AND TRADEMARK OFFICE

Commissioner for Patents
United States Patent and Trademark Office
P.O. Box 1450
Alexandria, VA 22313-1450
www.uspto.gov

Paper No.

KEVIN P. PEARCE
P.O. Box 195
Tire Hill PA 15959

COPY MAILED
MAR 2 8 2008
OFFICE OF PETITIONS

COPY MAILED
MAR 2 8 2008
OFFICE OF PETITIONS

In re Application of :
Kevin Pearce :
Application No. 10/710,057 : ON PETITION
Filed: June 15, 2004 :
Title: METHOD AND APPARATUS :
FOR PREVENTION OF COMPRESSOR :
STALL AND COMBUSTION FLAMEOUT :
IN A TURBINE ENGINE :

This is in response to the communication Re: Unavoidable Abandonment filed February 4, 2008, requesting that the abandonment of the above-identified application be reversed as the abandonment was unintentional and unavoidable.

For the reasons set forth below, the petition under §1.137(a) must be **DISMISSED** without consideration on the merits.

Any renewed petition must be submitted within **TWO (2) MONTHS** from the mail date of this decision. The reconsideration request should include a cover letter entitled "Renewed Petition under 37 CFR § 1.137(a)" or "Renewed Petition under 37 CFR § 1.137(b)," as appropriate. Extensions of time under 37 CFR § 1.136(a) are permitted.

The above-identified application became abandoned for failure to timely file a proper response to the Ex Parte Quayle Action mailed January 31, 2007. No reply was received. A courtesy Notice of Abandonment was mailed on August 22, 2007.

Applicant filed the instant petition, asserting that he did not receive the Office action as he was involved in divorce proceedings and had moved from his residence (the correspondence address of record). Applicant further states that he had been following the status of his application on Private Pair and did not become aware of the mailing of the Ex Parte Office Action until he downloaded the Notice of Abandonment. In support thereof, applicant submits that the January 31, 2007 Office action does not exist in PAIR and provides a copy of the PAIR screen. Applicant acknowledges that the Office action was received at the correspondence address of record but not timely forwarded to him by his ex-wife. Applicant bases his claim of unavoidable delay on his reliance on PRIVATE PAIR.

35 U.S.C. 41(a) (7) provides that a petition for the revival of an unintentionally abandoned application or for the unintentionally delayed payment of the issue fee must be accompanied by the petition fee set forth in 37 CFR 1.17(m), unless the petition is filed under 35 U.S.C. 133 or 151 (on the basis of unavoidable delay), in which case the fee is set forth in 37 CFR 1.17(l). Thus, unless the circumstances warrant the withdrawal of the holding of abandonment (i.e., it is determined that the application is not properly held abandoned), the payment of a petition fee to obtain the revival of an abandoned application is a statutory prerequisite to revival of the abandoned application, and cannot be waived.

In addition, the phrase "[o]n filing" in 35 U.S.C. 41(a)(7) means that the petition fee is required for the filing (and not merely the grant) of a petition under 37 CFR 1.137. See H.R. Rep. No. 542, 97th Cong., 2d Sess. 6 (1982), reprinted in 1982 U.S.C.C.A.N. 770 ("[t]he fees set forth in this section are due on filing the petition"). Therefore, the Office: (A) will not refund the petition fee required by 37 CFR 1.17(l) or 1.17(m), regardless of whether the petition under 37 CFR 1.137 is dismissed or denied; and (B) will not reach the merits of any petition under 37 CFR 1.137 lacking the requisite petition fee.

The phrase "unless the petition is filed under [35 U.S.C.] 133 or 151" signifies that petitions to revive filed on the basis of "unavoidable" delay (under 35 U.S.C. 133 or 151) are a subset of petitions to revive filed on the basis of unintentional delay. That is, "unavoidable" delay and "unintentional" delay are not alternatives; "unavoidable" delay is the epitome of

"unintentional" delay. Any petition to revive an abandoned application or lapsed patent must meet the minimal "unintentional" delay threshold, and an applicant need only pay the fee specified in 37 CFR 1.17(l) (rather than the fee specified in 37 CFR 1.17(m)) if the petition is also accompanied by an adequate showing that the entire delay in filing the required reply, from the due date for the reply until the filing of a grantable petition pursuant to 37 CFR 1.137(a), was unavoidable.

The application has been reviewed and the abandonment is proper. Applicant did not submit a petition fee. As payment of a petition fee to obtain the revival of an abandoned application is a statutory prerequisite to revival of an abandoned application and petitioner has not made such a payment, the petition must be dismissed.

Applicant is acting in a *pro se* capacity. As such, it is appropriate to remind applicant that the showing required under § 1.137(a) is exacting. Of course, applicant may continue to seek revival based on unavoidable delay. It is noted, however, as stated in MPEP 711.03(c):

> where an application becomes abandoned as a consequence of a change of correspondence address (the Office action being mailed to the old, uncorrected address and failing to reach the applicant in sufficient time to permit a timely reply) an adequate showing of "unavoidable" delay will require a showing that due care was taken to adhere to the requirement for prompt notification in each concerned application of the change of address (see MPEP § 601.03), and must include an adequate showing that a timely notification of the change of address was filed in the application concerned, and in a manner reasonably calculated to call attention to the fact that it was a notification of a change of address.

Alternatively, applicant may seek to revive the application based on unintentional delay. This standard is less stringent. However, the petition fee is currently $770 for a small entity.

Forms for filing petitions under 37 CFR 1.137 are available online at http://www.uspto.gov/web/forms/. Questions regarding completing these forms may be directed to the Office of Petitions Helpdesk at 571-272-3282 (or 1-800-PTO-9199).

Further correspondence with respect to this matter should be addressed as follows:

By mail:	Mail Stop Petition Commissioner for Patents P.O. Box 1450 Alexandria, VA 22313-1450
By FAX:	(571) 273-8300 ATTN: NANCY JOHNSON SENIOR PETITIONS ATTORNEY
By hand:	Customer Service Window Randolph Building 401 Dulany Street Alexandria, VA 22314

Telephone inquiries related to this decision should be directed to the undersigned at (571) 272-3219.

Nancy Johnson
Senior Petitions Attorney
Office of Petitions

UNITED STATES PATENT AND TRADEMARK OFFICE

COMMISSIONER FOR PATENTS
UNITED STATES PATENT AND TRADEMARK OFFICE
P.O. BOX 1450
ALEXANDRIA, VA 22313-1450
WWW.USPTO.GOV

Paper No. None

HOFFMAN WARNICK & D'ALESSANDRO, LLC
75 STATE STREET
14TH FL
ALBANY NY 12207

COPY MAILED
MAR 17 2006
OFFICE OF PETITIONS

In re Application of :
Michael D. Steigerwalt et al. :
Application No. 10/710,060 : DECISION ON PETITION
Filed: June 16, 2004 : UNDER 37 C.F.R. §1.181
Attorney Docket Number: FIS920040148US1 :
Title: STI FORMATION IN :
SEMICONDUCTOR DEVICE INCLUDING :
SOI AND BULK SILICON REGIONS :

This is a decision on the petition filed February 9, 2006, pursuant to 37 C.F.R. §1.181, requesting that the holding of abandonment in the above-identified application be withdrawn.

The above-identified application became abandoned for failure to file a proper response to the Restriction Requirement, mailed July 27, 2005, which set a shortened statutory period to reply for 1 month. No extensions of time under the provisions of 37 CFR 1.136(a) were received. Accordingly, the above-identified application became abandoned on August 28, 2005. A Notice of abandonment was mailed on February 7, 2006.

With the present petition, Petitioner has asserted that a response to this communication was submitted on August 3, 2005. Petitioner has submitted a copy of this submission, and it is noted that it contains a certificate of facsimile transmission dated August 3, 2005.

Petitioner has requested that the holding of abandonment in the above-identified application be withdrawn. It is clear that a response was timely submitted. Considering the facts and circumstances of the delay at issue, as set forth on petition, it is concluded that petitioner has met his burden of establishing that a submission was timely submitted.

Accordingly, the petition under 37 C.F.R. §1.181(a) is **GRANTED**. The holding of abandonment is **WITHDRAWN.**

The Technology Center will be notified of this decision.

Telephone inquiries regarding *this decision* should be directed to the undersigned at (571) 272-3225. All other inquiries concerning examination procedures or status of the application should be directed to the Technology Center.

Paul Shanoski
Senior Attorney
Office of Petitions
United States Patent and Trademark Office

UNITED STATES PATENT AND TRADEMARK OFFICE

Commissioner for Patents
United States Patent and Trademark Office
P.O. Box 1450
Alexandria, VA 22313-1450
www.uspto.gov

JJGJR.: 08-06

Paper No: __ .

COPY MAILED

JUL 24 2007

OFFICE OF PETITIONS

GUERRY LEONARD GRUNE
784 S VILLIER CT.
VIRGINIA BEACH VA 23452

In re Application of	:	
Grune, et al.	:	DECISION
Application No.: 10/710,079	:	
Filing Date: 17 June, 2004	:	
Attorney Docket No. Surborad_001	:	

This is a decision on the petition filed on 14 April, 2006, to revive the instant application under 37 C.F.R. §1.137(b) as having as abandoned due to unintentional delay.

The Office regrets the delay in addressing this matter, however, a decision previously was written, signed and sent for mailing but it now appears that mailing did not occur.

For the reasons set forth below the petition as considered under 37 C.F.R. §1.137(b) is **DISMISSED**.

NOTES:

Monitoring of the status of applications on PAIR can inform one's management of application responses and provide an indication when mailings of Office actions should be expected.

Moreover, Status Inquiries filed at three (3) or four (4) month intervals provide a demonstration of diligence and attention in supporting a petition seeking relief under 37 C.F.R. §1.181.

(1) Any petition (and fee) for reconsideration of this decision must be submitted within two (2) months from the mail date of this decision. Extensions of time under 37 C.F.R. §1.136(a) are permitted. The reconsideration request should include a cover letter entitled "Renewed Petition under 37 C.F.R. §1.137(b)."

(2) Thereafter, there will be no further reconsideration of this matter.

BACKGROUND

The record reflects that:

- Petitioner failed to reply timely and properly to Notice of Missing Parts (fees due) mailed on 4 August, 2004, with reply due absent extension of time on or before 4 October, 2004;
- the application went abandoned by operation of law after midnight 4 October, 2004;
- the Office mailed the Notice of Abandonment 10 April, 2006;
- with the instant petition (with fee), Petitioner filed as a reply fees as specified at the time of the Notice, however, Congress has since mandated a change in fees and Petitioner appears to have ignored the posting of current fees at the Office website (www.uspto.gov)–while the record reflects that the balance due at this writing is $57.00 ($100.00 - $43.00), this may change by the time Petitioner addresses the instant matter and Petitioner is reminded always to review the site for then-current fees at the time of payment;
- notably, it does not appear that Applicant filed a Status Inquiry in the 18 months between abandonment and the filing of the instant petition.

Out of an abundance of caution, Petitioners always are reminded that those registered to practice *and* all others who make representations before the Office are reminded to inquire into the underlying facts of representations made to the Office and support averments with the appropriate documentation–since all owe to the Office the continuing duty to disclose.[1]

---

[1] See supplement of 17 June, 1999. The Patent and Trademark Office is relying on petitioner's duty of candor and good faith and accepting a statement made by Petitioner. See Changes to Patent Practice and Procedure, 62 Fed. Reg. at 53160 and 53178, 1203 Off. Gaz. Pat. Office at 88 and 103 (responses to comments 64 and 109)(applicant obligated under 37 C.F.R. §10.18 to inquire into the underlying facts and

STATUTES, REGULATIONS AND ANALYSIS

Congress has authorized the Commissioner to "revive an application if the delay is shown to the satisfaction of the Commissioner to have been "unavoidable." 35 U.S.C. §133 (1994).[2]

The regulations at 37 C.F.R. §1.137(a) and (b) set forth the requirements for a petitioner to revive a previously unavoidably or unintentionally, respectively, abandoned application under this congressional grant of authority. The language of 35 U.S.C. §133 and 37 C.F.R. §1.137(a) is clear, unambiguous, and without qualification: the delay in tendering the reply to the outstanding

---

circumstances when providing statements to the Patent and Trademark Office).

Specifically, the regulations at 37 C.F.R. §10.18 provide:

§ 10.18 Signature and certificate for correspondence filed in the Patent and Trademark Office.
(a) For all documents filed in the Office in patent, trademark, and other non-patent matters, except for correspondence that is required to be signed by the applicant or party, each piece of correspondence filed by a practitioner in the Patent and Trademark Office must bear a signature by such practitioner complying with the provisions of §1.4(d), §1.4(e), or § 2.193(c)(1) of this chapter.
(b) By presenting to the Office (whether by signing, filing, submitting, or later advocating) any paper, the party presenting such paper, whether a practitioner or non-practitioner, is certifying that—

(1) All statements made therein of the party's own knowledge are true, all statements made therein on information and belief are believed to be true, and all statements made therein are made with the knowledge that whoever, in any matter within the jurisdiction of the Patent and Trademark Office, knowingly and willfully falsifies, conceals, or covers up by any trick, scheme, or device a material fact, or makes any false, fictitious or fraudulent statements or representations, or makes or uses any false writing or document knowing the same to contain any false, fictitious or fraudulent statement or entry, shall be subject to the penalties set forth under 18 U.S.C. 1001, and that violations of this paragraph may jeopardize the validity of the application or document, or the validity or enforceability of any patent, trademark registration, or certificate resulting therefrom; and

(2) To the best of the party's knowledge, information and belief, formed after an inquiry reasonable under the circumstances, that —

(i) The paper is not being presented for any improper purpose, such as to harass someone or to cause unnecessary delay or needless increase in the cost of prosecution before the Office;

(ii) The claims and other legal contentions therein are warranted by existing law or by a nonfrivolous argument for the extension, modification, or reversal of existing law or the establishment of new law;

(iii) The allegations and other factual contentions have evidentiary support or, if specifically so identified, are likely to have evidentiary support after a reasonable opportunity for further investigation or discovery; and

(iv) The denials of factual contentions are warranted on the evidence, or if specifically so identified, are reasonably based on a lack of information or belief.

(c) Violations of paragraph (b)(1) of this section by a practitioner or non-practitioner may jeopardize the validity of the application or document, or the validity or enforceability of any patent, trademark registration, or certificate resulting therefrom. Violations of any of paragraphs (b)(2)(i) through (iv) of this section are, after notice and reasonable opportunity to respond, subject to such sanctions as deemed appropriate by the Commissioner, or the Commissioner's designee, which may include, but are not limited to, any combination of —

(1) Holding certain facts to have been established;
(2) Returning papers;
(3) Precluding a party from filing a paper, or presenting or contesting an issue;
(4) Imposing a monetary sanction;
(5) Requiring a terminal disclaimer for the period of the delay; or
(6) Terminating the proceedings in the Patent and Trademark Office.

(d) Any practitioner violating the provisions of this section may also be subject to disciplinary action. See § 10.23(c)(15).
[Added 50 FR 5175, Feb. 6, 1985, effective Mar. 8, 1985; para. (a) revised, 58 FR 54494, Oct. 22, 1993, effective Nov. 22, 1993; paras. (a) & (b) revised, paras. (c) & (d) added, 62 FR 53131, Oct. 10, 1997, effective Dec. 1, 1997; para. (a) revised, 69 FR 56481, Sept. 21, 2004, effective Oct. 21, 2004]

[2] 35 U.S.C. §133 provides:
35 U.S.C. §133 Time for prosecuting application.
Upon failure of the applicant to prosecute the application within six months after any action therein, of which notice has been given or mailed to the applicant, or within such shorter time, not less than thirty days, as fixed by the Commissioner in such action, the application shall be regarded as abandoned by the parties thereto, unless it be shown to the satisfaction of the Commissioner that such delay was unavoidable.

Office action, as well as filing the first petition seeking revival, must have been unavoidable for the reply now to be accepted on petition.[3]

Delays in responding properly raise the question whether delays are unavoidable.[4] Where there is a question whether the delay was unavoidable, Petitioners must meet the burden of establishing that the delay was unavoidable within the meaning of 35 U.S.C. §133 and 37 C.F.R. §1.137(a).[5] And the Petitioner must be diligent in attending to the matter.[6] Failure to do so does not constitute the care required under Pratt, and so cannot satisfy the test for diligence and due care.

(By contrast, unintentional delays are those that do not satisfy the very strict statutory and regulatory requirements of unavoidable delay, and also, by definition, are not intentional.[7]))

Allegations as to
Unintentional Delay

The requirements for a grantable petition under 37 C.F.R. §1.137(b) are the petition and fee, a statement/showing of unintentional delay, a proper reply, and–where appropriate--a terminal disclaimer and fee.

It appears as of this writing that Petitioner has yet to satisfy the "reply" (fees due) requirement under the regulation..

CONCLUSION

The petition as considered under 37 C.F.R. §1.137(b) is **dismissed**.

---

[3] Therefore, by example, an unavoidable delay in the payment of the Filing Fee might occur if a reply is shipped by the US Postal Service, but due to catastrophic accident, the delivery is not made.

[4] See: *Changes to Patent Practice and Procedure*; *Final Rule Notice*, 62 *Fed. Reg.* at 53158-59 (October 10, 1997), 1203 *Off. Gaz. Pat. Office* at 86-87 (October 21, 1997).

[5] See: In re Application of G, 11 USPQ2d 1378, 1380 (Comm'r Pats. 1989).

[6] See: Diligence in Filing Petitions to Revive and Petitions to Withdraw the Holding of Abandonment, 1124 Off. Gaz. Pat. Office 33 (March 19, 1991). It was and is Petitioner's burden to exercise diligence in seeking either to have the holding of abandonment withdrawn or the application revived. See 1124 Off. Gaz. Pat. Office supra.

[7] Therefore, by example, an unintentional delay in the reply might occur if the reply and transmittal form are to be prepared for shipment by the US Postal Service, but other pressing matters distract one's attention and the mail is not timely deposited for shipment.

Further correspondence with respect to this matter should be addressed as follows:[8]

By mail: Commissioner for Patents[9]
P.O. Box 1450
Alexandria, VA 22313-1450

By FAX: IFW Formal Filings
(571) 273-8300
ATTN.: Office of Petitions

By hand: Mail Stop: Petition
Customer Service Window
Randolph Building
401 Dulany Street
Alexandria, VA 22314

While telephone inquiries regarding this decision may be directed to the undersigned at (571) 272-3214, it is noted that all practice before the Office is in writing (see: 37 C.F.R. §1.2[10]) and the proper authority for action on any matter in this regard are the statutes (35 U.S.C.), regulations (37 C.F.R.) and the commentary on policy (MPEP). Therefore, no telephone discussion may be controlling or considered authority for Petitioner's action(s).

John J. Gillon, Jr.
Senior Attorney
Office of Petitions

---

[8] On July 15, 2005, the Central Facsimile (FAX) Number changed to (571) 273-8300. The number (571) 273-8300 is be the only facsimile number recognized for centralized delivery. (For further information. see: http://www.uspto.gov/web/offices/pac/dapp/opla/preognotice/cfax062005.pdf .)

[9] To determine the appropriate addresses for other subject-specific correspondence, refer to the USPTO Web site at www.uspto.gov.

[10] The regulations at 37 C.F.R. §1.2 provide:

§1.2 Business to be transacted in writing.

All business with the Patent and Trademark Office should be transacted in writing.The personal attendance of applicants or their attorneys or agents at the Patent and Trademark Office is unnecessary. The action of the Patent and Trademark Office will be based exclusively on the written record in the Office. No attention will be paid to any alleged oral promise, stipulation,or understanding in relation to which there is disagreement or doubt.

NOTICE OF FEE DUE

DATE: 04-17-06

TO: DAE

FROM: Office of Initial Patent Examination

SUBJECT: Fee Due

APPLICATION NUMBER 10710079

A fee is due for the attached document submitted to the U.S. Patent and Trademark Office for the following reason. Please check the application for the appropriate authorizations to charge a deposit account if an authorizations is present, please charge the Appropriate Fee. If and authorization is not present, notify the applicant of the fee deficiency.

- [x] Insufficient fee by check
- [ ] Insufficient funds in deposit amount
- [ ] Insufficient by Credit Card
- [ ] Declined credit card
- [ ] Non-authorization for charge to deposit account
- [ ] No fee submitted per requirement

The correct fee code:	2201	Amount	$ 100
The suspended fee code:	1999	Amount	$ 43
The suspended	1622	Amount	$
The suspended	2622	Amount	$
Fee Due			$ 57

Terminal Operator Abebe

UNITED STATES PATENT AND TRADEMARK OFFICE

Commissioner for Patents
United States Patent and Trademark Office
P.O. Box 1450
Alexandria, VA 22313-1450
www.uspto.gov

COPY MAILED

MAY 19 2008

OFFICE OF PETITIONS

GUERRY LEONARD GRUNE
784 S VILLIER CT.
VIRGINIA BEACH VA 23452

In re Application of :
Grune, et al. :
Application No. 10/710,079 : DECISION
Filed: 17 June, 2004 :
Attorney Docket Surfboard_001 :

This is a decision on the petition filed on 10 August, 2007, to revive an application under 37 C.F.R. §1.137(b) as having been abandoned due to unintentional delay.

The Office regrets the delay in addressing this matter, however, the instant petition was presented to the attorneys in the Office of Petitions only at this writing.

The petition under 37 C.F.R. §1.137(b) is **GRANTED**.

As to the Allegations
of Unintentional Delay

The requirements of a grantable petition pursuant to 37 C.F.R. §1.137(b) are the petition and fee therefor, a reply, a proper statement of unintentional delay under the regulation, and, where applicable, a terminal disclaimer and fee. (However, no terminal disclaimer and fee are due here.)

It appears that Petitioner has satisfied the requirements of the regulation, as discussed herein below.

BACKGROUND

The record reflects that:

Petitioner failed to reply timely and properly to Notice of Missing Parts (fees due) mailed on 4 August, 2004, with reply due absent extension of time on or before 4 October, 2004.

The application went abandoned by operation of law after midnight 4 October, 2004.

The Office mailed the Notice of Abandonment 10 April, 2006.

With the original petition (with fee), Petitioner filed as a reply fees as specified at the time of the Notice, however, Congress has since mandated a change in fees and Petitioner appears to have ignored the posting of current fees at the Office website (www.uspto.gov)–while the record reflected was $57.00 ($100.00 - $43.00), Petitioner was reminded to review the site for then-current fees at the time of payment, and the petition was dismissed on 24 July, 2007.

The instant petition was filed on 10 August, 2007, (with fee previously paid) and including therewith the reply in the form of fees due and the statement of unintentional delay.

The availability of applications and application papers online to applicants/practitioners who diligently associate their Customer Number with the respective application(s) now provides an applicant/practitioner on-demand information as to events/transactions in an application. Thus, now if one wishes to know the progress in and/or status of an application or the accuracy of the data therein, one need only look at the file online.

Out of an abundance of caution, Petitioners always are reminded that those registered to practice *and* all others who make representations before the Office must inquire into the underlying facts of representations made to the Office and support averments with the appropriate documentation–since all owe to the Office the continuing duty to disclose.[1]

STATUTES, REGULATIONS

Congress has authorized the Commissioner to "revive an application if the delay is shown to the satisfaction of the Commissioner to have been "unavoidable." 35 U.S.C. §133 (1994).

---

[1] See supplement of 17 June, 1999. The Patent and Trademark Office is relying on petitioner's duty of candor and good faith and accepting a statement made by Petitioner. See Changes to Patent Practice and Procedure, 62 Fed. Reg. at 53160 and 53178, 1203 Off. Gaz. Pat. Office at 88 and 103 (responses to comments 64 and 109)(applicant obligated under 37 C.F.R. §10.18 to inquire into the underlying facts and circumstances when providing statements to the Patent and Trademark Office). See specifically, the regulations at 37 C.F.R. §10.18.

The regulations at 37 C.F.R. §1.137(a) and (b) set forth the requirements for a Petitioner to revive a previously unavoidably or unintentionally, respectively, abandoned application.[2],[3]

CONCLUSION

The instant petition under 37 C.F.R. §1.137(b) is **granted**.

The instant application is released to Technology Center/AU 3617 for further processing in due course.

Petitioner may find it beneficial to view Private PAIR within a fortnight of the instant decision to ensure that the revival has been acknowledged by the Technology Center/AU in response to this decision. It is noted that all inquiries with regard to any failure of that change in status should be directed to the Technology Center where that change of status must be effected—that does not occur in the Office of Petitions.

While telephone inquiries regarding this decision may be directed to the undersigned at (571) 272-3214, it is noted that all practice before the Office is in writing (see: 37 C.F.R. §1.2[9]) and the proper authority for action on any matter in this regard are the statutes (35 U.S.C.), regulations (37 C.F.R.) and the commentary on policy (MPEP). Therefore, no telephone discussion may be controlling or considered authority for Petitioner's action(s).

John J. Gillon, Jr.
Senior Attorney
Office of Petitions

---

[2] See: Changes to Patent Practice and Procedure; Final Rule Notice, 62 Fed. Reg. at 53158-59 (October 10, 1997), 1203 Off. Gaz. Pat. Office at 86-87 (October 21, 1997).

[3] The language of 35 U.S.C. §133 and 37 C.F.R. §1.137(a) is clear, unambiguous, and without qualification: the delay in tendering the reply to the outstanding Office action, as well as filing the first petition seeking revival, must have been unavoidable for the reply now to be accepted on petition. (Therefore, by example, an unavoidable delay in the payment of the Filing Fee might occur if a reply is shipped by the US Postal Service, but due to catastrophic accident, the delivery is not made.) Delays in responding properly raise the question whether delays are unavoidable. Where there is a question whether the delay was unavoidable, Petitioners must meet the burden of establishing that the delay was unavoidable within the meaning of 35 U.S.C. §133 and 37 C.F.R. §1.137(a) And the Petitioner must be diligent in attending to the matter. Failure to do so does not constitute the care required under Pratt, and so cannot satisfy the test for diligence and due care. (By contrast, unintentional delays are those that do not satisfy the very strict statutory and regulatory requirements of unavoidable delay, and also, by definition, are not intentional.))

[9] The regulations at 37 C.F.R. §1.2 provide:

§1.2 Business to be transacted in writing.

All business with the Patent and Trademark Office should be transacted in writing. The personal attendance of applicants or their attorneys or agents at the Patent and Trademark Office is unnecessary. The action of the Patent and Trademark Office will be based exclusively on the written record in the Office. No attention will be paid to any alleged oral promise, stipulation, or understanding in relation to which there is disagreement or doubt.

UNITED STATES PATENT AND TRADEMARK OFFICE

Commissioner for Patents
United States Patent and Trademark Office
P.O. Box 1450
Alexandria, VA 22313-1450
www.uspto.gov

ALBIHNS STOCKHOLM AB
Linnegatan 2
BOX 5581
SE-114 85 Stockholm SWEDEN

COPY MAILED

SEP 12 2006

OFFICE OF PETITIONS

In re Application of :
WERNER, et al. :
Application No. 10/710,098 : DECISION ON PETITION
Filed: June 18, 2004 : TO WITHDRAW
Attorney Docket No. 72230-74877 : FROM RECORD
:

This is a decision on the Request to Withdraw as attorney or agent of record under 37 C.F.R. § 1.36(b), filed June 29, 2006.

The request is **NOT APPROVED**.

A grantable request to withdraw as attorney/agent of record must be signed by every attorney/agent seeking to withdraw or contain a clear indication that one attorney is signing on behalf of another/others. A request to withdraw will not be approved unless at least 30 (thirty) days would remain between the date of approval and the later of the expiration date of a time to file a response or the expiration date of the maximum time period which can be extended under 37 C.F.R. § 1.136(a).

The Office cannot approve the request at this time since the reasons provided do not meet any of the conditions under the mandatory or permissive categories enumerated in 37 CFR 10.40. Section 10.40 of Title 37 of the Code of Federal Regulation states, "[a] practitioner shall not withdraw from employment in a proceeding before the Office without permission from the Office[.]" More specifically, 37 CFR 10.40 states, "[i]f paragraph (b) of this section is not applicable, a practitioner may not request permission to withdraw in matter pending before the Office unless such request or such withdrawal is" for one the permissive reasons listed in 37 CFR 10.40(c). The reasons set forth in the request, "Leaving the employ of Customer No. 26288", do not meet any of the conditions set forth in 37 CFR 10.40.

All future communications from the Office will continue to be directed to the above-listed address until otherwise notified by applicant.

Telephone inquiries concerning this decision should be directed to Patricia Volpe at 571-272-6825.

David Bucci
Petitions Examiner
Office of Petitions

UNITED STATES PATENT AND TRADEMARK OFFICE

Commissioner for Patents
United States Patent and Trademark Office
P.O. Box 1450
Alexandria, VA 22313-1450
www.uspto.gov

ALBIHNS STOCKHOLM AB
BOX 5581, LINNEGATAN 2
SE-114 85 STOCKHOLM; SWEDENn
STOCKHOLM SE SWEDEN

COPY MAILED

OCT 18 2006

OFFICE OF PETITIONS

In re Application of

WERNER, et al.
Application No. 10/710,099
Filed: June 18, 2004
Attorney Docket No. 72229-74876

DECISION ON PETITION
TO WITHDRAW
FROM RECORD

This is a decision on the Request to Withdraw as attorney or agent of record under 37 C.F.R. § 1.36(b), filed June 29, 2006.

The request is **NOT APPROVED**.

A grantable request to withdraw as attorney/agent of record must be signed by every attorney/agent seeking to withdraw or contain a clear indication that one attorney is signing on behalf of another/others. A request to withdraw will not be approved unless at least 30 (thirty) days would remain between the date of approval and the later of the expiration date of a time to file a response or the expiration date of the maximum time period which can be extended under 37 C.F.R. § 1.136(a).

The request to withdraw less than all attorneys appointed by customer number 26288 cannot be approved. The addition and/or deletion of a practitioner from the list of practitioners associated with a Customer Number should be made by submitting a "Request for Customer Number Data Change" (PTO/SB/124) which will result in the addition or deletion of such practitioner from the list of persons authorized to represent any applicant or assignee of the entire interest who appointed all of the practitioners associated with such Customer Number. See MPEP 403 Section I. Customer Number Practice. The correspondence address of record remains unchanged.

Telephone inquiries concerning this decision should be directed to Monica A. Graves at 571-272-7253.

David Bucci
Petitions Examiner
Office of Petitions

UNITED STATES PATENT AND TRADEMARK OFFICE

Commissioner for Patents
United States Patent and Trademark Office
P.O. Box 1450
Alexandria, VA 22313-1450
www.uspto.gov

CHRISTOPHER PAUL MITCHELL
888 16TH ST., NW
SUITE 800
WASHINGTON, DC 20006

COPY MAILED

MAR 1 0 2009

OFFICE OF PETITIONS

In re Application of Bettinger :
Application No. 10/710,102 : Decision on Petition
Filing Date: June 18, 2004 :
Attorney Docket No. 0710.0003 :

This is a decision on the petition under 37 CFR 1.137(b), filed October 2, 2008, to revive the above-identified application.

The petition is **granted**.

The Office mailed a final Office action on January 4, 2008. The Office action set a shortened statutory period for reply of three (3) months.

A reply to the final Office action and payment for a three-month extension of time were filed June 27, 2008.

The Office mailed an Advisory Action on July 14, 2008, which indicated the reply filed June 27, 2008, because it raised new issues that would require an additional search and/or additional consideration.

Since the reply filed June 27, 2008, was improper, the application became abandoned on Tuesday, July 8, 2008. A Notice of Abandonment was mailed September 9, 2008.

The instant petition requests revival of the application.

A grantable petition under 37 CFR 1.137(b) must be accompanied by:

(1) the reply required to the outstanding Office action or notice, unless previously filed,
(2) the petition fee,
(3) a statement that the entire delay in filing the required reply from the due date for the reply until the filing of a grantable petition pursuant to 37 CFR 1.137(b) was unintentional, and
(4) a terminal disclaimer and fee if the application was filed on or before June 8, 1995 or if the application is a design application.

Petitioner has submitted a reply to the final Office action in the form of a Request for Continued Examination and petitioner has submitted the required petition fee.

Petitioner has stated the entire delay in filing the required reply from the due date for the reply until the filing of a grantable petition pursuant to 37 CFR 1.137(b) was unintentional. However, the petition is signed by Attorney Christopher Mitchell who was not an attorney of record at the time the application became abandoned. Attorney Mitchell may not have firsthand or direct knowledge of the facts and circumstances of the delay. Nevertheless, the statement by Attorney Mitchell that the entire delay was unintentional is being treated as having been made as the result of a reasonable inquiry into the facts and circumstances of such delay.[1] In the event that such an inquiry has not been made, petitioner must make such an inquiry. If such inquiry results in the discovery that a portion of the delay from the due date for the reply until the filing of a grantable petition pursuant to 37 CFR 1.137(b) was unintentional, petitioner must notify the Office.

Petitioner has met the requirements to revive the above-identified application pursuant to 37 CFR 1.137(b). Therefore, the petition is granted and the application is revived.

The power of attorney and request to change the address of record filed with the petition have been accepted and entered into the record.

Technology Center Art Unit 3637 will be informed of the instant decision and the application will be further examined in due course.

Telephone inquiries regarding this communication should be directed to Petitions Attorney Steven Brantley at (571) 272-3203.

Charles Steven Brantley
Senior Petitions Attorney
Office of Petitions

[1] See Changes to Patent Practice and Procedure, 62 *Fed. Reg.* at 53160 and 53178; 1203 *Off. Gaz. Pat. Office* at 88 and 103 (responses to comments 64 and 109) (applicant obligated under 37 CFR 10.18 to inquire into the underlying facts and circumstances when providing the statement required by 37 CFR 1.137(b) to the Patent and Trademark Office).

UNITED STATES PATENT AND TRADEMARK OFFICE

Commissioner for Patents
United States Patent and Trademark Office
P.O. Box 1450
Alexandria, VA 22313-1450
www.uspto.gov

SCHLUMBERGER OILFIELD SERVICES
200 GILLINGHAM LANE
MD 200-9
SUGAR LAND, TX 77478

COPY MAILED

APR 0 2 2009

OFFICE OF PETITIONS

In re Application of Revellat et al. :
Application No. 10/710,103 : Decision on Petition
Filing Date: June 18, 2004 :
Attorney Docket No. 20.2904 :

This is a decision on the petition under 37 CFR 1.137(b), filed October 21, 2008, to revive the above-identified application.

The petition is **dismissed**.

Any request for reconsideration must be submitted within TWO (2) MONTHS from the mail date of this decision. No further petition fee is required for the request. Extensions of time under 37 CFR 1.136(a) are permitted. The reconsideration request should include a cover letter entitled "Renewed Petition under 37 CFR 1.137(b)."

The Office mailed a final Office action on January 30, 2008.

A reply and payment for an extension of time were filed May 29, 2008. The reply consisted of a "Pre-Appeal Brief Request for Review."

A Pre-Appeal Brief Request must be filed with a Notice of Appeal. *See* New Pre-Appeal Brief Conference Program, 1296 *Off. Gaz. Pat. Office* 67 (July 12, 2005). A Notice of Appeal was not filed on May 29, 2008. Therefore, the Pre-Appeal Brief Request was not a proper reply to the final Office action and the application became abandoned on May 31, 2008.

The Office mailed a Notice of Panel Decision from Pre-Appeal Brief Review on October 8, 2008. The Notice stated the request would not be considered because a Notice of Appeal was not filed with the request.

The instant petition was filed October 21, 2008.

A grantable petition under 37 CFR 1.137(b) must be accompanied the reply required to the outstanding Office action or notice, unless previously filed. A Notice of Appeal was filed with the petition. However, the Notice of Appeal, as filed, will not be considered a proper reply because of significant problems with the format of the Notice of Appeal.

The Notice of Appeal and a "Pre-Appeal Brief Request for Review" were submitted by facsimile transmission on October 21, 2008. The Notice of Appeal and two pages of the Request, as filed, appear to have been minimized by 50% by a photocopy machine prior to transmission. Both documents fail to comply with 37 CFR 1.52(a) in so far as portions of both documents are not "plainly and legibly written" as a result of the minimization of the form. A copy of both documents, as filed, is enclosed.

The Office notes the "Pre-Appeal Brief Request for Review" submitted October 21, 2008, consists of three pages: a main page and two pages of arguments in support of the Request. The arguments section of the Request appears to be incomplete in so far as two pages of arguments appear to be missing.

Any request for reconsideration should include a Notice of Appeal in a proper format. Any request for reconsideration should also include a complete "Pre-Appeal Brief Request for Review" in a proper format.

Further correspondence with respect to this matter should be addressed as follows:

By mail: Mail Stop Petition
Commissioner for Patents
P.O. Box 1450
Alexandria, VA 22313-1450

By facsimile: (571) 273-8300
Attn: Office of Petitions

By hand: U.S. Patent and Trademark Office
Customer Service Window
Randolph Building
401 Dulany Street
Alexandria, VA 22314

Telephone inquiries regarding this communication should be directed to Petitions Attorney Steven Brantley at (571) 272-3203.

Charles Steven Brantley
Senior Petitions Attorney
Office of Petitions

Enclosures: Copy of Notice of Appeal filed October 21, 2008
Copy of Pre-Appeal Brief Request for Review filed October 21, 2008
Copy of Fee Transmittal form filed October 21, 2008

PTO/SB/21 (09-05)
Approved for use through 10/31/2008. OMB 0651-0031
U.S. Patent and Trademark Office; U.S. DEPARTMENT OF COMMERCE
Under the Paperwork Reduction Act of 1995, no persons are required to respond to a collection of information unless it displays a valid OMB control number.

NOTICE OF APPEAL FROM THE EXAMINER TO THE BOARD OF PATENT APPEALS AND INTERFERENCES

Docket Number (Optional): 20.2904

I hereby certify that this correspondence is being facsimile transmitted to the USPTO ~~or deposited with the United States Postal Service with sufficient postage as first class mail in an envelope addressed to: Commissioner for Patents, P.O. Box 1450, Alexandria, VA 22313-1450 (37 CFR 1.8(a))~~ via facsimile to 571-273-8300 on 10/21/08

Signature: Kerry Morris

Typed or printed name: Kerry Morris

In re Application of: Guillaume Revellat

Application Number: 10/710103

Filed: 06/18/2004

For: Downhole Tools with a Stirling Cooler System

Art Unit: 3700

Examiner: Ali, Mohammad M.

Applicant hereby appeals to the Board of Patent Appeals and Interferences from the last decision of the examiner.

The fee for this Notice of Appeal is (37 CFR 41.20(b)(1)) $ 540

☐ Applicant claims small entity status. See 37 CFR 1.27. Therefore, the fee shown above is reduced by half, and the resulting fee is: $

☐ A check in the amount of the fee is enclosed.

☐ Payment by credit card. Form PTO-2038 is attached.

☐ The Director has already been authorized to charge fees in this application to a Deposit Account.

☑ The Director is hereby authorized to charge any fees which may be required, or credit any overpayment to Deposit Account No. 190610.

☐ A petition for an extension of time under 37 CFR 1.136(a) (PTO/SB/22) is enclosed.

WARNING: Information on this form may become public. Credit card information should not be included on this form. Provide credit card information and authorization on PTO-2038.

I am the

☐ applicant/inventor.

☐ assignee of record of the entire interest. See 37 CFR 8.71. Statement under 37 CFR 3.73(b) is enclosed. (Form PTO/SB/96)

☑ attorney or agent of record. Registration number 31783

☐ attorney or agent acting under 37 CFR 1.34. Registration number if acting under 37 CFR 1.34.

Signature: Darla P. Fonseca

Typed or printed name: Darla P. Fonseca

Telephone number: 281-285-7325

Date: 10/21/08

NOTE: Signatures of all the inventors or assignees of record of the entire interest or their representative(s) are required. Submit multiple forms if more than one signature is required, see below*.

☐ *Total of _____ forms are submitted.

This collection of information is required by 37 CFR 41.31. The information is required to obtain or retain a benefit by the public which is to be filed by the USPTO to process an application. Confidentiality is governed by 35 U.S.C. 122 and 37 CFR 1.11, 1.14 and 41.6. This collection is estimated to take 12 minutes to complete, including gathering, preparing, and submitting the completed application form to the USPTO. Time will vary depending upon the individual case. Any comments on the amount of time you require to complete this form and/or suggestions for reducing this burden, should be sent to the Chief Information Officer, U.S. Patent and Trademark Office, U.S. Department of Commerce, P.O. Box 1450, Alexandria, VA 22313-1450. DO NOT SEND FEES OR COMPLETED FORMS TO THIS ADDRESS. SEND TO: Commissioner for Patents, P.O. Box 1450, Alexandria, VA 22313-1450.

If you need assistance in completing the form, call 1-800-PTO-9199 and select option 2.

RECEIVED
CENTRAL FAX CENTER
OCT 21 2008

10/21/2008 HMARZI1 00000066 190610 10710103
02 FC:1401 540.00 DA

RECEIVED
CENTRAL FAX CENTER
OCT 21 2008

Doc Code: AP.PRE.REQ

PTO/SB/33 (09-08)
Approved for use through 10/31/2008. OMB 0651-0031
U.S. Patent and Trademark Office: U.S. DEPARTMENT OF COMMERCE

Under the Paperwork Reduction Act of 1995, no persons are required to respond to a collection of information unless it displays a valid OMB control number.

PRE-APPEAL BRIEF REQUEST FOR REVIEW

Docket Number (Optional): 20.2904

I hereby certify that this correspondence is being deposited with the United States Postal Service with sufficient postage ~~as first class mail~~ in an envelope addressed to "Mail Stop AF, Commissioner for Patents, P.O. Box 1450, Alexandria, VA 22313-1450" [37 CFR 1.8(a)]
Via Fax to 571-273-8300
on 10/21/08

Signature: Kerry Morris

Typed or printed name: Kerry Morris

Application Number	Filed
10/710103	06/18/2004

First Named Inventor: Guillaume Revellat

Art Unit	Examiner
3744	Ali, Mohammad M.

Applicant requests review of the final rejection in the above-identified application. No amendments are being filed with this request.

This request is being filed with a notice of appeal.

The review is requested for the reason(s) stated on the attached sheet(s).
Note: No more than five (5) pages may be provided.

I am the

- ☐ applicant/inventor.
- ☐ assignee of record of the entire interest. See 37 CFR 3.71. Statement under 37 CFR 3.73(b) is enclosed. (Form PTO/SB/96)
- ☑ attorney or agent of record. Registration number 31783
- ☐ attorney or agent acting under 37 CFR 1.34. Registration number if acting under 37 CFR 1.34 _____

Darla P. Fonseca
Signature

Darla P. Fonseca
Typed or printed name

281-285-7325
Telephone number

10/21/08
Date

NOTE: Signatures of all the inventors or assignees of record of the entire interest or their representative(s) are required. Submit multiple forms if more than one signature is required, see below*.

☐ *Total of _____ forms are submitted.

This collection of information is required by 35 U.S.C. 132. The information is required to obtain or retain a benefit by the public which is to file (and by the USPTO to process) an application. Confidentiality is governed by 35 U.S.C. 122 and 37 CFR 1.11, 1.14 and 41.6. This collection is estimated to take 12 minutes to complete, including gathering, preparing, and submitting the completed application form to the USPTO. Time will vary depending upon the individual case. Any comments on the amount of time you require to complete this form and/or suggestions for reducing this burden, should be sent to the Chief Information Officer, U.S. Patent and Trademark Office, U.S. Department of Commerce, P.O. Box 1450, Alexandria, VA 22313-1450. DO NOT SEND FEES OR COMPLETED FORMS TO THIS ADDRESS. SEND TO: Mail Stop AF, Commissioner for Patents, P.O. Box 1450, Alexandria, VA 22313-1450.

If you need assistance in completing the form, call 1-800-PTO-9199 and select option 2.

Application No.: 10/710,103 Docket No.: 20.2904

CERTIFICATE OF MAILING
37 C.F.R 1.8
I hereby certify that this correspondence is being transmitted by facsimile to the Patent and Trademark Office in accordance with § 1.6(d) to: (571) 273-8300, on the date below:

10/21/08 Kerry Morris
Date Signature

Docket No.: 20.2904

IN THE UNITED STATES PATENT AND TRADEMARK OFFICE

In re Patent Application of:
Guillaume REVELLAT et al.

Application No.: 10/710,103 Confirmation No.: 4102

Filed: June 18, 2004 Art Unit: 3744

For: SYSTEM AND METHODS OF CHARACTERIZING A HYDROCARBON RESERVOIR Examiner: ALI, Mohammad M.

PRE-APPEAL BRIEF REQUEST FOR REVIEW

Claims 1-2, 4-9, 11-16, and 18-22 are patentable over DiFoggio (US 6,341,498) in view of Penswick et al. (US 5,647,217) and Ross et al. (US 6,070,414).

The Examiner has the initial burden of making a *prima facie* case of obviousness. Obviousness can only be established by combining or modifying the teachings of the prior art to produce the claimed invention where there is some teaching, suggestion, or motivation to do so. *In re Kahn*, 441 F.3d 977, 986, 78 USPQ2d 1329, 1335 (Fed. Cir. 2006). The mere fact that references can be combined or modified does not render the resultant combination obvious unless the prior art also suggests the desirability of the combination. *In re Mills*, 916 F.2d 680, 16 USPQ2d 1430 (Fed. Cir. 1990). *See also*, MPEP § 2143.01. Applicant respectfully submits that the cited prior art references lack teaching, suggestion, or motivation to combine and DiFoggio actually teaches away from the present invention. Therefore, the Examiner has not made a prima facie case of obviousness.

PAGE 5/8 * RCVD AT 10/21/2008 12:17:59 PM [Eastern Daylight Time] * SVR:USPTO-EFXRF-4/0 * DNIS:2738300 * CSID: * DURATION (mm-ss):10-18

the art would not be motivated to combined the teaching of DiFoggio with Penswick and Ross. Without any teaching, suggestion, or motivation to combine, these references are not properly combinable, and, therefore, a *prima facie* case of obviousness has not been made.

Claims 3, 10, 17, 23 and 24 are patentable over DiFoggio in view of Penswick et al. and Ross et al. and further in view of Yamamoto (US 6,843,037).

As noted above, because DiFoggio teaches away from the present invention, there is no motivation to combine DiFoggio, Penswick, and Ross. Yamamoto also does not provide any motivation to combine these references. Yamamoto teaches Stirling engines that may include a permanent magnet drive system. However, Yamamoto, like other teachings on Stirling coolers, is not concerned with putting a Stirling cooler on a drill string or wireline and, therefore, does not provide any teaching that would encourage one skilled in the art to ignore the teaching away of DiFoggio. Therefore, there is no suggestion or motivation to combine DiFoggio, Penswick, Ross, and Yamamoto. Accordingly, claims of the invention cannot be obvious over these prior art references.

Conclusion

In view of the above, the Examiner has failed to establish a prima facie case of obviousness for any of the pending claims. Accordingly, a favorable decision from the panel is respectfully requested. Please apply any charges not covered, or any credits, to Deposit Account 19-0610 (Reference Number: 20.2904).

Dated: Oct 21, 2008

Respectfully submitted,

By Darla P. Fonseca

Darla Fonseca
Registration No.: 31783
Attorney for Assignee

T-445 P006/008 F-831
10-21-'08 11:18 FROM-Schlumberger
PAGE 6/8 * RCVD AT 10/21/2008 12:17:59 PM [Eastern Daylight Time] * SVR:USPTO-EFXRF-4/0 * DNIS:2738300 * CSID: * DURATION (mm-ss):10-18

PTO/SB/17 (10-08)
Approved for use through 09/30/2010. OMB 0651-0032
U.S. Patent and Trademark Office; U.S. DEPARTMENT OF COMMERCE
Under the Paperwork Reduction Act of 1995 no persons are required to respond to a collection of information unless it displays a valid OMB control number

Effective on 10/09/2004
Fees pursuant to the Consolidated Appropriations Act, 2005 (ARR. 4909)

FEE TRANSMITTAL
For FY 2009

☐ Applicant claims small entity status. See 37 CFR 1.27

TOTAL AMOUNT OF PAYMENT ($) 1620

Complete if Known	
Application Number	10/710103
Filing Date	06/18/2004
First Named Inventor	Guillaume Revellat
Examiner Name	Ali, Mohammed M.
Art Unit	9700
Attorney Docket No.	20.2904

METHOD OF PAYMENT (check all that apply)

☐ Check ☐ Credit Card ☐ Money Order ☐ None ☐ Other (please identify): _____

☑ Deposit Account Deposit Account Number: 180610 Deposit Account Name: Schlumberger

For the above-identified deposit account, the Director is hereby authorized to: (check all that apply)

☑ Charge fee(s) indicated below ☐ Charge fee(s) indicated below, except for the filing fee

☑ Charge any additional fee(s) or underpayments of fee(s) under 37 CFR 1.16 and 1.17 ☑ Credit any overpayments

WARNING: Information on this form may become public. Credit card information should not be included on this form. Provide credit card information and authorization on PTO-2038.

FEE CALCULATION

1. BASIC FILING, SEARCH, AND EXAMINATION FEES

Application Type	FILING FEES Fee ($)	FILING FEES Small Entity Fee ($)	SEARCH FEES Fee ($)	SEARCH FEES Small Entity Fee ($)	EXAMINATION FEES Fee ($)	EXAMINATION FEES Small Entity Fee ($)	Fees Paid ($)
Utility	330	165	540	270	220	110	
Design	220	110	100	50	140	70	
Plant	220	110	330	165	170	85	
Reissue	330	165	540	270	650	325	
Provisional	220	110	0	0	0	0	

2. EXCESS CLAIM FEES

Fee Description	Fee ($)	Small Entity Fee ($)
Each claim over 20 (including Reissues)	52	26
Each independent claim over 3 (including Reissues)	220	110
Multiple dependent claims	390	195

Total Claims _____ - 20 or HP = _____ x _____ = _____ Extra Claims Fee ($) Fee Paid ($)

HP = highest number of total claims paid for, if greater than 20.

Indep. Claims _____ - 3 or HP = _____ x _____ = _____ Extra Claims Fee ($) Fee Paid ($)

HP = highest number of independent claims paid for, if greater than 3.

Multiple Dependent Claims Fee ($) _____ Fee Paid ($) _____

3. APPLICATION SIZE FEE

If the specification and drawings exceed 100 sheets of paper (excluding electronically filed sequence or computer listings under 37 CFR 1.52(e)), the application size fee due is $270 ($135 for small entity) for each additional 50 sheets or fraction thereof. See 35 U.S.C. 41(a)(1)(G) and 37 CFR 1.16(s).

Total Sheets _____ - 100 = _____ / 50 = _____ (round up to a whole number) x _____ = _____ Extra Sheets Number of each additional 50 or fraction thereof Fee ($) Fee Paid ($)

4. OTHER FEE(S)

Non-English Specification, $130 fee (no small entity discount) _____ Fees Paid ($)

Other (e.g., late filing surcharge): Petition to Revive 1620

SUBMITTED BY

Signature	David P. Fonseca	Registration No. (Attorney/Agent) 21783	Telephone 281-285-7325
Name (Print/Type)	Dale P. Fonseca		Date

This collection of information is required by 37 CFR 1.136. The information is required to obtain or retain a benefit by the public which is to file (and by the USPTO to process) an application. Confidentiality is governed by 35 U.S.C. 122 and 37 CFR 1.14. This collection is estimated to take 30 minutes to complete, including gathering, preparing, and submitting the completed application form to the USPTO. Time will vary depending upon the individual case. Any comments on the amount of time you require to complete this form and/or suggestions for reducing this burden, should be sent to the Chief Information Officer, U.S. Patent and Trademark Office, U.S. Department of Commerce, P.O. Box 1450, Alexandria, VA 22313-1450. DO NOT SEND FEES OR COMPLETED FORMS TO THIS ADDRESS. SEND TO: Commissioner for Patents, P.O. Box 1450, Alexandria, VA 22313-1450.
If you need assistance in completing the form, call 1-800-PTO-9199 and select option 2.

RECEIVED
CENTRAL FAX CENTER
OCT 21 2008

UNITED STATES PATENT AND TRADEMARK OFFICE

Commissioner for Patents
United States Patent and Trademark Office
P.O. Box 1450
Alexandria, VA 22313-1450
www.uspto.gov

SCHLUMBERGER OILFIELD SERVICES
200 GILLINGHAM LANE
MD 200-9
SUGAR LAND, TX 77478

COPY MAILED

MAY 21 2009

OFFICE OF PETITIONS

In re Application of Revellat et al. :
Application No. 10/710,103 : Decision on Petition
Filing Date: June 18, 2004 :
Attorney Docket No. 20.2904 :

This is a decision on the renewed petition under 37 CFR 1.137(b), filed April 17, 2009, to revive the above-identified application.

The petition is **granted**.

The Office mailed a final Office action on January 30, 2008.

A reply and payment for an extension of time were filed May 29, 2008. The reply consisted of a "Pre-Appeal Brief Request for Review." A Pre-Appeal Brief Request must be filed with a Notice of Appeal. *See* New Pre-Appeal Brief Conference Program, 1296 *Off. Gaz. Pat. Office* 67 (July 12, 2005). A Notice of Appeal was not filed on May 29, 2008. Therefore, the Pre-Appeal Brief Request was not a proper reply to the final Office action and the application became abandoned on May 31, 2008.

The Office mailed a Notice of Panel Decision from Pre-Appeal Brief Review on October 8, 2008. The Notice stated the request would not be considered because a Notice of Appeal was not filed with the request.

The instant petition requests revival of the application.

A grantable petition under 37 CFR 1.137(b) must be accompanied by:

(1) the reply required to the outstanding Office action or notice, unless previously filed,
(2) the petition fee,
(3) a statement that the entire delay in filing the required reply from the due date for the reply until the filing of a grantable petition pursuant to 37 CFR 1.137(b) was unintentional, and
(4) a terminal disclaimer and fee if the application was filed on or before June 8, 1995 or if the application is a design application.

Petitioner has submitted a reply to the outstanding final Office action in the form of a Notice of Appeal and "Pre-Appeal Brief Request for Review." The petition fee was previously submitted on October 21, 2008.

The prior petition filed October 21, 2008, explicitly stated the *entire* delay in filing the required reply from the due date for the reply until the filing of a grantable petition pursuant to 37 CFR 1.137(b) was unintentional. The instant petition does not include the same language. However, to the extent any statement of delay in the petition varies from this exact language, the statement will be construed as the equivalent of the statement above. If the entire delay from the date of abandonment until the date the petition a *grantable* petition was filed was not unintentional, petitioner must notify the Office.

Petitioner has met the requirements to revive the above-identified application pursuant to 37 CFR 1.137(b). Therefore, the petition is granted and the application is revived.

Technology Center Art Unit 3744 will be informed of the instant decision and of the need to take action in response to the "Pre-Appeal Brief Request for Review" filed April 17, 2009.

Telephone inquiries regarding this communication should be directed to Petitions Attorney Steven Brantley at (571) 272-3203.

Charles Steven Brantley
Senior Petitions Attorney
Office of Petitions

UNITED STATES PATENT AND TRADEMARK OFFICE

Commissioner for Patents
United States Patent and Trademark Office
P.O. Box 1450
Alexandria, VA 22313-1450
www.uspto.gov

Paper No.

NOVAK DRUCE & QUIGG, LLP
1300 EYE STREET NW
SUITE 1000 WEST TOWER
WASHINGTON DC 20005

COPY MAILED

AUG 21 2007

OFFICE OF PETITIONS

In re Application of :
Jan Haggander : DECISION ON PETITION
Application No. 10/710,108 :
Filed: June 18, 2004 :
Atty Docket No.7589.179.PCUS00:

This is a decision on the PETITION FOR REVIVAL OF AN APPLICATION FOR PATENT ABANDONED UNINTENTIONALLY UNDER 37 CFR 1.137(b) filed June 15, 2007.

The petition is **GRANTED**.

The above-identified application became abandoned for failure to file a reply to the Office action mailed August 18, 2006. On June 19, 2006, applicants filed a non-responsive amendment. No proper reply considered timely filed and no extension of time considered obtained, the application became abandoned. The filing of the instant petition precedes the mailing of a courtesy Notice of Abandonment.

The petition includes the required reply in the form of an amendment, the statement of unintentional delay and payment of the petition fee. No terminal disclaimer is required.

Technology Center AU 3746 has been advised of this decision. The application is, thereby, forwarded to the examiner for consideration of the reply submitted on petition filed June 15, 2007.

Telephone inquiries specific to this matter should be directed to the undersigned at (571) 272-3219.

Nancy Johnson
Senior Petitions Attorney
Office of Petitions

UNITED STATES PATENT AND TRADEMARK OFFICE

UNITED STATES DEPARTMENT OF COMMERCE
United States Patent and Trademark Office
Address: COMMISSIONER FOR PATENTS
P.O. Box 1450
Alexandria, Virginia 22313-1450
www.uspto.gov

ROBERTS MLOTKOWSKI SAFRAN & COLE, P.C.
Intellectual Property Department
P.O. Box 10064
MCLEAN, VA 22102-8064

Mail Date: 04/20/2010

Applicant	: Betty L. Bergman Reuter	: DECISION ON REQUEST FOR
Patent Number	: 7584077	: RECALCULATION of PATENT
Issue Date	: 09/01/2009	: TERM ADJUSTMENT IN VIEW
Appliction No	: 10/710,113	: OF WYETH AND NOTICE OF INTENT TO
Filed	: 06/18/2004	: ISSUE CERTIFICATE OF CORRECTION
		:

The Request for Recalculation is **GRANTED** to the extent indicated.

The patent term adjustment has been determined to be **1058** days. The USPTO will *sua sponte* issue a certificate of correction reflecting the amount of PTA days determined by the recalculation.

Prior to the issuance of the certificate of correction, the USPTO will afford patentee an opportunity to be heard and request reconsideration. Accordingly, patentee has **one month or thirty (30) days**, whichever is longer, to file a request for reconsideration of this patent term adjustment calculation. See 35 U.S.C. 154(b)(3)(B)(ii) and 37 CFR 1.322(a)(4). No extensions of time will be granted under 37 CFR 1.136.

Patentee should use document code PET.OP if electronically filing a request for reconsideration of this patent term adjustment calculation. The patentee must also include the information required by 37 CFR 1.705(b)(2) and the fee required by 37 CFR 1.18(e). If patentee does not file a timely request for reconsideration of this patent term adjustment calculation including the information required by 37 CFR 1.705(b)(2) and the fee required by 37 CFR 1.18(e), the USPTO will issue a certificate of correction reflecting the PTA determination noted above.

Patentee should be aware that in order to preserve the right to review in the United States District Court for the District of Columbia of the USPTO patent term adjustment determination, patentee must ensure that he or she also take the steps required under 35 U.S.C. 154(b)(4)(A) in a timely manner. Nothing in the request for recalculation should be construed as providing an alternative time frame for commencing a civil action under 35 U.S.C. 154(b)(4)(A).

Any questions concerning this decision should be directed to the Office of Patent Legal Administration at 571-272-7702.

UNITED STATES PATENT AND TRADEMARK OFFICE

Commissioner for Patents
United States Patent and Trademark Office
P.O. Box 1450
Alexandria, VA 22313-1450
www.uspto.gov

NOVAK DRUCE & QUIGG, LLP
1300 EYE STREET NW
400 EAST TOWER
WASHINGTON DC 20005

COPY MAILED

MAR 2 0 2006

OFFICE OF PETITIONS

In re Application of :
Regenell et al. :
Application No. 10/710,118 : ON PETITION
Filed: June 18, 2004 :
Attorney Docket Number: 0173.056.PCUS00

This is a decision on the petition under 37 CFR 1.137(b), filed February 6, 2006, to revive the above-identified application.

This above-identified application became abandoned for failure to timely file a reply to the non-final Office Action of June 17, 2005. The non-final Office Action set a three (3) month shortened statutory period for reply. No extensions of time were obtained under the provisions of 37 CFR §1.136(a). Accordingly, this application became abandoned on September 18, 2005. A Notice of Abandonment was mailed on January 27, 2006.

This petition is hereby **Granted**.

The office hereby acknowledges the receipt of the amendment submitted with the instant petition.

Please note all correspondence should contain application no. **10/710,118**.

This application is being forwarded to Technology Center 3600 for further processing.

Telephone inquiries concerning this matter should be directed to the undersigned at (571) 272-3215.

Charlema R. Grant

Charlema R. Grant
Petitions Attorney
Office of Petitions

UNITED STATES PATENT AND TRADEMARK OFFICE

Commissioner for Patents
United States Patent and Trademark Office
P.O. Box 1450
Alexandria, VA 22313-1450
www.uspto.gov

NOVAK DRUCE + QUIGG LLP
1300 EYE STREET NW
SUITE 1000 WEST TOWER
WASHINGTON DC 20005

COPY MAILED

DEC 18 2007

OFFICE OF PETITIONS

In re Application of :
Regnell et al. :
Application No. 10/710,118 : DECISION ON PETITION
Filed: June 18, 2004 :
Attorney Docket No: 0173.056.PCUS00 :
Title: Underrun Protection Device

This is a decision on petition under 37 CFR 1.137(b), filed August 22, 2007 to revive the above-identified application.

This above-identified application became abandoned for failure to timely file a response to an Office Communication mailed on May 24, 2006. The Office Communication set a one (1) month shortened statutory period for reply. No extensions of time were obtained under the provisions of 37 CFR §1.136(a). Accordingly, this application became abandoned on June 25, 2006. A Notice of Abandonment was mailed on February 2, 2007.

This petition is hereby **Granted**.

The petition satisfies the conditions for revival pursuant to the provisions of 37 CFR 1.137(b) in that (1) the reply in the form of an amendment, drawings, specification and terminal disclaimer and fee ; (2) the petition fee; and (3) a proper statement of unintentional delay.

It is noted the address presented on the petition differs from the correspondence address of record. While a courtesy copy of this decision is being mailed to the person signing the present petition, all future correspondence will be directed to the address currently of record until such time as appropriate instructions are received to the

contrary.

This application is being referred to Technology Center AU 3612 for appropriate action by the Examiner in the normal course of business on the reply received

Telephone inquiries concerning this matter should be directed to the undersigned at (571) 272-3215.

Charlema R. Grant

Petitions Attorney

Office of Petitions

cc: Tracy W. Druce
1000 Louisiana Fifty-Third Floor
Houston, Texas 77002

UNITED STATES PATENT AND TRADEMARK OFFICE

Commissioner for Patents
United States Patent and Trademark Office
P.O. Box 1450
Alexandria, VA 22313-1450
www.uspto.gov

BARRY W. CHAPIN, ESQ.
CHAPIN INTELLECTUAL PROPERTY LAW, LLC
WESTBOROUGH OFFICE PARK
1700 WEST PARK DRIVE, SUITE 280
WESTBOROUGH MA 01581

COPY MAILED

DEC 0 7 2009

OFFICE OF PETITIONS

In re Application of	:	
John Witchel	:	
Application No. 10/710,120	:	DECISION ON PETITION
Filed: June 20, 2004	:	
Attorney Docket No. GMZ07-12	:	

This is a decision on the petition under the unintentional provisions of 37 CFR 1.137(b), filed October 9, 2009, to revive the above-identified application.

The petition is **GRANTED**.

This application became abandoned for failure to reply in a timely manner to the final Office action mailed March 17, 2009. No extensions of time under the provisions of 37 CFR 1.136(a) were timely obtained. Accordingly, this application became abandoned on June 18, 2009. A Notice of Abandonment was mailed December 2, 2009.

The petition satisfies the requirements of 37 CFR 1.137(b) in that petitioner has supplied (1) the reply in the form of a Request for Continued Examination (RCE) and fee of $810.00 and the submission required by 37 CFR 1.114; (2) the petition fee of $1,620.00; and (3) a proper statement of unintentional delay.

Additionally, an extension of time under 37 CFR 1.136 must be filed prior to the expiration of the maximum extendable period for reply. *See* In re Application of S., 8 USPQ2d 1630, 1631 (Comm'r Pats. 1988). Since the $1,110.00, three- month extension of time fee submitted on October 9, 2009 was subsequent to the maximum extendable period for reply, this fee is unnecessary and will be refunded to petitioner's credit card in due course.

Telephone inquiries concerning this decision should be directed to the undersigned at (571) 272-7751.

This matter is being referred to Technology Center 2443 for processing of the Request for Continued Examination under 37 CFR 1.114 filed with the instant petition.

Joan Olszewski
Petitions Examiner
Office of Petitions

UNITED STATES PATENT AND TRADEMARK OFFICE

Commissioner for Patents
United States Patent and Trademark Office
P.O. Box 1450
Alexandria, VA 22313-1450
www.uspto.gov

ZIOLKOWSKI PATENT SOLUTIONS GROUP, SC (GEMS)
14135 NORTH CEDARBURG ROAD
MEQUON WI 53097

COPY MAILED

MAR 16 2006

OFFICE OF PETITIONS

In re Application of :
King et al. :
Application No. 10/710,133 : DECISION ON PETITION
Filed: June 21, 2004 :
Attorney Docket No. GEMS8081.216 :

This is in response to the petition under 37 CFR 1.47, filed February 22, 2006, which is properly treated as a petition under 37 CFR 1.183 to waive the requirements of 37 CFR 1.131 that all of the inventors sign the declaration of prior inventorship.[1]

Unfortunately, petitioner did not pay the requisite fee of $400.00 for the filing of the petition under 37 CFR 1.183 or submit a general authorization to charge the Deposit Account. The rules and statutory provisions governing the operations of the Office require payment of a fee upon filing a petition. The petition under 37 CFR 1.183 will not be treated on its merits, but rather will remain in the file until the Office receives a renewed petition under 37 CFR 1.183, as well as the $400.00 petition fee.

Petitioner must file both a renewed petition and pay the $400.00 petition fee within **TWO (2) MONTHS** of the mailing date of this decision. No extensions of time are permissible.

Further correspondence with respect to this matter should be addressed as follows and **to the attention of Senior Petitions Attorney Christina Tartera Donnell:**

By mail: Mail Stop Petition
Commissioner for Patents
P.O. Box 1450
Alexandria, VA 22313-1450

By FAX: (703) 872-9306
Attn: Office of Petitions

[1] 37 CFR 1.47 only applies when an inventor refuses to sign the original 37 CFR 1.63 oath or declaration.

By hand: Customer Service Window
Randolph Building
401 Dulany Street
Alexandria, VA 22314

Telephone inquiries related to this decision may be directed to the undersigned at (571) 272-3211.

Christina Tartera Donnell

Christina Tartera Donnell
Senior Petitions Attorney
Office of Petitions

UNITED STATES PATENT AND TRADEMARK OFFICE

Commissioner for Patents
United States Patent and Trademark Office
P.O. Box 1450
Alexandria, VA 22313-1450
www.uspto.gov

ZIOLKOWSKI PATENT SOLUTIONS GROUP, SC (GEMS)
14135 NORTH CEDARBURG ROAD
MEQUON WI 53097

COPY MAILED

APR 0 5 2006

OFFICE OF PETITIONS

In re Application of :
King et al. :
Application No. 10/710,133 : DECISION ON PETITION
Filed: June 21, 2004 :
Attorney Docket No. GEMS8081.216 :

This is in response to the petition under 37 CFR 1.47, filed February 22, 2006, which is properly treated as a petition under 37 CFR 1.183 to waive the requirements of 37 CFR 1.131 that all of the inventors sign the declaration of prior inventorship.[1]

Applicants request that the Office accept the Declaration under 37 CFR 1.131 without the signature of joint inventor Angelos. Applicants assert that they made diligent efforts to contact Angelos by email and telephone, as well as searched for and obtained her current work email address. Applicants attest to the fact that Angelos did not respond. Further, applicants state that there was no indication or evidence that the email address was not recognized.

37 CFR 1.131 states, in pertinent part:

> When any claim of an application or a patent under reexamination is rejected, the **inventor** of the subject matter of the rejected claim, the owner of the patent under reexamination, or the party qualified under §§ 1.42, 1.43, or 1.47, may submit an appropriate oath or declaration to establish invention of the subject matter of the rejected claim prior to the effective date of the reference or activity on which the rejection is based.[2]

In addition, the Manual of Patent Examining Procedure states that "an application or declaration by less than all named inventors of an application is accepted where it is shown that less than all named inventors of an application invented the subject matter of the claim or claims under rejection."[3]

---

[1] 37 CFR 1.47 only applies when an inventor refuses to sign the original 37 CFR 1.63 oath or declaration.

[2] 37 CFR 1.131(a) (emphasis added).

[3] MPEP 715.04.

Here, no party qualified under 37 CFR 1.42, 1.43, or 1.47 exists. Furthermore, applicants do not contend that less than all of the named inventors of the application invented the subject matter of the claims under rejection. Accordingly, the proper parties to sign the Declaration under 37 CFR 1.131 include all of the joint inventors.

For a petition under 37 CFR 1.183 to be granted to waive the requirement that joint inventor Angelos sign the § 1.131 declaration, applicants must demonstrate that this is an extraordinary situation where justice requires waiver of the rules.

In the present petition, applicants set forth the steps taken to obtain joint inventor Angelos' signature on the § 1.131 declaration. Applicants showed they made a diligent effort to locate and communicate with Angelos in effort to obtain her signature on the § 1.131 declaration, but to no avail. Applicants also submitted statements and supporting documentation of their efforts. Furthermore, joint inventors King and Polzin signed the Declaration under 37 CFR 1.131.

Under the circumstances, it is concluded that applicants demonstrated that this is an extraordinary situation, requiring waiver of the rules. The petition under 37 CFR 1.183 is **GRANTED**.

The $400.00 petition fee will be charged to the Deposit Account as authorized.

This matter is being forwarded to Technology Center Art Unit 2859.

Telephone inquiries concerning this decision should be directed to the undersigned at (571) 272-3211.

Christina Tartera Donnell

Christina Tartera Donnell
Senior Petitions Attorney
Office of Petitions

UNITED STATES PATENT AND TRADEMARK OFFICE

COMMISSIONER FOR PATENTS
UNITED STATES PATENT AND TRADEMARK OFFICE
P.O. BOX 1450
ALEXANDRIA, VA 22313-1450
www.uspto.gov

JUDGE PATENT FIRM
RIVIERE SHUKUGAWA 3RD FL.
3-1 WAKAMATSU-CHO
NISHINOMIYA-SHI, HYOGO 662-0-035 JP JAPAN

COPY MAILED

DEC 0 7 2005

OFFICE OF PETITIONS

Applicant: Tamgawa et al.
Appl. No.: 10/710,160
Filing Date: June 23, 2004
Title: CENTRIFUGAL FAN, COOLING MECHANISM, AND APPARATUS FURNISHED WITH THE COOLING MECHANISM
Attorney Docket No.: 18.015
Pub. No.: US 2005/0042082 A1
Pub. Date: February 24, 2005

This is a decision on the request for a corrected patent application publication under 37 CFR 1.221(b), filed on April 21, 2005, for the above-identified application.

The request is granted.

The corrected patent application publication will be published in due course, unless the patent issues before the application is republished.

Inquiries relating to this matter may be directed to Mark Polutta at (571) 272-7709 (voice).

Mark O. Polutta
Office of Patent Legal Administration
Office of the Deputy Commissioner
for Patent Examination Policy

UNITED STATES PATENT AND TRADEMARK OFFICE

Commissioner for Patents
United States Patent and Trademark Office
P.O. Box 1450
Alexandria, VA 22313-1450
www.uspto.gov

DEC - 8 2006

ZIOLKOWSKI PATENT SOLUTIONS GROUP, SC (ZPS)
14135 NORTH CEDARBURG ROAD
MEQUON WI 53097

In re Application of:
VODEN, JUSTIN L.
Serial No.: 10/710,171
Filed: June 23, 2004
Docket: GLD7462.089
Title: COLLAPSIBLE GAME TABLE

DECISION ON PETITION TO REVIEW RESTRICTION REQUIREMENT UNDER 37 CFR 1.144

This is a decision on the petition filed January 20, 2006 to review the restriction requirement issued on July 25, 2005.

The petition is **dismissed as moot**.

In his January 20, 2006 petition the applicant requested the withdrawal of the restriction requirement issued on July 25, 2005.

The record shows that:

1) On July 25, 2005 the examiner imposed a restriction requirement. The applicant was requested to elect one of four groups of invention. The examiner concluded the groups are distinct because they were "unrelated."
2) On Aug. 24, 2005, the applicant elected Group I invention, claims 1-17 for examination with traverse.
3) On Nov. 14, 2005, the examiner issued a first Office action on the merits and made the restriction requirement final.
4) On January 20, 2006 the applicant filed the present petition requesting that the restriction requirement be withdraw. In particular, the applicant alleges that the four groups are not unrelated.
5) In response to the Final rejection of 3/16/06, on July 17, 2006, the applicant filed a Rule 116 amendment canceling all rejected claims and non-elected claims 18-44, substantially amending the elected claim 1, adding a new independent claim 45 and a new dependent claim 46.
6) On August 25, 2006, the examiner allowed all claims in the case, claims 1-5, 7-17, 45-46.

In order to determine the propriety of the restriction requirement, a comparison and analysis of the original claims 1-44 as filed must be made. Since the originally elected claim1 was substantially amended in the Rule 116 amendment and subsequently was found allowable along with newly added claims 45-46, then, at least a comparison and analysis of now allowed independent claims 1 and 45 will be made against other cancelled non-elected independent claims 18, 25 and 34.

A review of the allowed claims 1 and 45 shows that the following features are not required in the non-elected and canceled independent claims 8, 25 and 35. Claims 1 and 45 call for a game table with a plurality of table top portions interconnected by a hinge, a template detachably mounted on the table top portions, a plurality of hooks mounted, on table top portions and constructed to maintain the template in stretched position, and at least one rail configured to be removably mounted to the table top portions and configured to removably secure the game template. Whereas the non-elected claims 18, 25 and 35 do not require such features as claimed in the elected and allowed claims 1 and 45. This is clear evidence that the elected claims 1-5, 7-17 and 45-46 are independent and distinct from the non-elected and cancelled claims 18-44. The restriction requirement between claims 1-5, 7-17 and 45-46 and the remaining non-elected, now cancelled, claims 18-44 is deemed to be proper.

Since the application has been allowed and non-elected claims 18-44 have been canceled, then, the petition is dismissed as moot.

Any inquiry regarding this decision should be directed to Henry Yuen, Special Program Examiner, at (571) 272-4856.

Karen M. Young

Karen M. Young, Director
Technology Center 3700

UNITED STATES PATENT AND TRADEMARK OFFICE

Commissioner for Patents
United States Patent and Trademark Office
P.O. Box 1450
Alexandria, VA 22313-1450
www.uspto.go

MAIL

JUL 0 9 2005

DIRECTOR OFFICE
TECHNOLOGY CENTER 2600

MELVIN CHAN, ESQ
AKA CHAN LLP
900 LAFAYETTE STREET
STE 710
SANTA CLARA CA 95050

In re application of:
CHEN, et al
Application No. 10/710172
Filed: June 23, 2004
For: NETWORK PROCESSING USING FRACTIONAL TIME STAMP VALUES

DECISION ON REQUEST TO WITHDRAW FROM RECORD

This is a decision on the request to withdraw as attorney/agent of record and change of address filed on May 20, 2005.

A grantable request to withdraw as attorney/agent of record must:
(1) indicate the present mailing address of the attorney(s)/agent(s) who seek(s) to withdraw, and
(2) be signed by each attorney/agent seeking to withdraw or clearly be signed on their behalf, and
(3) be *approved* at least thirty (30) days prior to the maximum extendable period for response to any outstanding Office Action, and
(4) indicate the address to which future correspondence should be mailed.

Petitioner has satisfied the requirements for successfully requesting withdrawal. Accordingly, the request is **GRANTED.**

All of the attorneys/agents with Customer Number (20350) in the request are withdrawn.

All future communications from the Office will continue to be directed to the address listed above until otherwise notified by applicant. Applicant is reminded of the obligation to promptly notify the Patent and Trademark Office of any change in correspondence address to ensure receipt of all communications from the Office.

Kenneth A. Wieder
Special Program Examiner
Technology Center 2600
Communications
(571) 272-2986

cc : TOWNSEND AND TOWNSEND AND CREW LLP
TWO EMBARCADERO CENTER
EIGHTH FLOOR
SAN FRANCISCO CA 94111-3834

UNITED STATES PATENT AND TRADEMARK OFFICE

Commissioner for Patents
United States Patent and Trademark Office
P.O. Box 1450
Alexandria, VA 22313-1450
www.uspto.gov

IBM MICROELECTRONICS
INTELLECTURAL PROPERTY LAW
1000 RIVER STREET, 972 E
ESSEX JUNCTION, VT 05452

COPY MAILED
SEP 15 2008

In re Application of	:	
Makoto Ueda	:	
Application No. 10/710,185	:	DECISION ON PETITION
Filed: June 24, 2004	:	
Attorney Docket No. JP920030086US1	:	

This is a decision on the petition under the unintentional provisions of 37 CFR 1.137(b), filed April 21, 2008, to revive the above-identified application.

The petition is **GRANTED**.

This application became abandoned for failure to timely pay the issue and publication fees on or before August 8, 2006, as required by the Notice of Allowance and Fee(s) Due mailed May 8, 2006. Accordingly, the date of abandonment of this application is August 9, 2006. A Notice of Abandonment was mailed September 7, 2006.

The petition satisfies the requirements of 37 CFR 1.137(b) in that petitioner has supplied (1) the reply in the form of payment of the issue fee of $1,440.00 and the publication fee of $300.00, (2) the petition fee of $1,540.00; and (3) a proper statement of unintentional delay.

Telephone inquiries concerning this decision should be directed to Joan Olszewski at (571) 272-7751.

This application is being referred to the Office of Data Management for processing into a patent.

Liana Walsh
Petitions Examiner
Office of Petitions

UNITED STATES PATENT AND TRADEMARK OFFICE

Commissioner for Patents
United States Patent and Trademark Office
P.O. Box 1450
Alexandria, VA 22313-1450
www.uspto.gov

CANTOR COLBURN
55 GRIFFIN ROAD
SOUTH
BLOOMFIELD CT 06002

COPY MAILED

FEB 03 2006

OFFICE OF PETITIONS

In re Application of :
Timothy J. Williams :
Application No. 10/710,204 : ON PETITION
Filed: June 25, 2004 :
Attorney Docket No. 152941 :

This is a decision on the petition, filed February 2, 2006, under 37 CFR 1.313(c)(2) to withdraw the above-identified application from issue after payment of the issue fee.

The petition is **GRANTED.**

The above-identified application is withdrawn from issue for consideration of a submission under 37 CFR 1.114 (request for continued examination). See 37 CFR 1.313(c)(2).

Petitioner is advised that the issue fee paid on December 13, 2005, in the above-identified application cannot be refunded. If, however, the above-identified application is again allowed, petitioner may request that it be applied towards the issue fee required by the new Notice of Allowance.[1]

Telephone inquiries should be directed to the undersigned at (571) 272-3208.

The examiner of Technology Center AU 2829 will consider the request for continued examination under 37 CFR 1.114.

Karen Creasy

Karen Creasy
Petitions Examiner
Office of Petitions
Office of the Deputy Commissioner
for Patent Examination Policy

---

[1] The request to apply the issue fee to the new Notice may be satisfied by completing and returning the new Issue Fee Transmittal Form PTOL-85(b), which includes the following language thereon: "Commissioner for Patents is requested to apply the Issue Fee and Publication Fee (if any) or re-apply any previously paid issue fee to the application identified above." Petitioner is advised that, whether a fee is indicated as being due or not, the Issue Fee Transmittal Form **must** be completed and timely submitted to avoid abandonment. Note the language in bold text on the first page of the Notice of Allowance and Fee(s) Due (PTOL-85).

UNITED STATES PATENT AND TRADEMARK OFFICE

Commissioner for Patents
United States Patent and Trademark Office
P.O. Box 1450
Alexandria, VA 22313-1450
www.uspto.gov

NOVAK DRUCE & QUIGG LLP
1300 EYE ST NW
SUITE 1000 WEST TOWER
WASHINGTON DC 20005

COPY MAILED

OCT 0 1 2007

OFFICE OF PETITIONS

In re Application of :
Rolf Thorensen :
Application No. 10/710,219 : ON PETITION
Filed: June 27, 2004 :
Attorney Docket No. 0173.057.PCUS00 :

This is a decision on the petition under 37 CFR 1.137(b), filed August 25, 2007, to revive the above-identified application.

The petition under 37 CFR 1.137(b) is **GRANTED**.

The above-identified application became abandoned for failure to timely file a response to the Office action mailed April 19, 2006. This Office action set an extendable period for reply of one month. No extensions of time were obtained. Accordingly, no reply having been received, the application became abandoned on May 20, 2006. A Notice of Abandonment was mailed on October 25, 2006.

With the instant petition, applicant paid the petition fee, made the proper statement of unintentional delay, and submitted the required reply in the form of a response.

The file does not indicate a change of address has been submitted, although the address given on the petition differs from the address of record. If appropriate, a change of address should be filed in accordance with MPEP 601.03. A courtesy copy of this decision is being mailed to the address given on the petition; however, the Office will mail all future correspondence solely to the address of record.

The matter is being forwarded to Group Art Unit 3679 for consideration of the response filed August 25, 2007.

Telephone inquiries concerning this decision should be directed to the undersigned at (571)272-3207.

Cliff Congo
Petitions Attorney
Office of Petitions

cc: Tracy W. Druce
1000 Louisiana
Fifty-Third Floor
Houston, Texas 77002

UNITED STATES PATENT AND TRADEMARK OFFICE

Commissioner for Patents
United States Patent and Trademark Office
P.O. Box 1450
Alexandria, VA 22313-1450
www.uspto.gov

STUART T AUVINEN
429 26TH AVENUE
SANTA CRUZ CA 95062-5319

COPY MAILED

SEP 21 2007

OFFICE OF PETITIONS

In re Patent No. 6,987,961	:	
Issue Date: January 17, 2006	:	
Application No. 10/710,238	:	NOTICE
Filed: June 28, 2004	:	
Attorney Docket No. NM-104	:	

This is a notice regarding your request for acceptance of a fee deficiency submission under 37 CFR 1.28. On September 1, 1998, the Court of Appeals for the Federal Circuit held that 37 CFR 1.28(c) is the sole provision governing the time for correction of the erroneous payment of the issue fee as a small entity. **See DH Technology v. Synergystex International, Inc. 154 F.3d 1333, 47 USPQ2d 1865 (Fed. Cir. Sept. 1, 1998).**

The Office no longer investigates or rejects original or reissue applications under 37 CFR 1.56. **1098 Off. Gaz. Pat. Office 502 (January 3, 1989).** Therefore, nothing in this Notice is intended to imply that an investigation was done.

Your fee deficiency submission under 37 CFR 1.28 is hereby **ACCEPTED**.

This patent is no longer entitled to small entity status. Accordingly, all future fees paid in this patent must be paid at the large entity rate.

Liana Walsh
Petitions Examiner
Office of Petitions

UNITED STATES PATENT AND TRADEMARK OFFICE

Commissioner for Patents
United States Patent and Trademark Office
P.O. Box 1450
Alexandria, VA 22313-1450
www.uspto.gov

DECISION ON PETITION UNDER 37 C.F.R. 1.48(b) TO CORRECT INVENTORSHIP

The petition filed 5/30/2007 for serial # 10/710253 under 37 C.F.R. 1.48(b) to correct inventorship after restriction has been:

[x] GRANTED.

[ ] DENIED.

The petitions lack:

[ ] The processing fee set forth in § 1.17(i).

[ ] A request, signed by a party set forth in § 1.33(b), to correct the inventorship that identifies the named inventor or inventors being deleted and acknowledges that the inventor's invention is no longer being claimed in the nonprovisional application;

Katherine Mitchell
Primary Examiner

UNITED STATES PATENT AND TRADEMARK OFFICE

Commissioner for Patents
United States Patent and Trademark Office
P.O. Box 1450
Alexandria, VA 22313-1450
www.uspto.gov

MAILED FROM
DIRECTORS OFFICE

AUG 28 2006

TECHNOLOGY CENTER 2800

MCGINN INTELLECTUAL PROPERTY LAW GROUP, PLLC
8321 OLD COURTHOUSE ROAD
SUITE 200
VIENNA VA 22182-3817

In re Application of: DORIS et al
Application No. 10/710272
Filed: 06/30/2004
Attorney Docket No. FIS920030389US1

Decision on Petition

This is a decision on the petition filed under 37 C.F.R. § 1.181 on July 3, 2006 to withdraw the finality of previous office action.

The petition is GRANTED.

According to MPEP 706.07(a):

Under present practice, second or any subsequent actions on the merits shall be final, except where the examiner introduces a new ground of rejection that is neither necessitated by applicant's amendment of the claims nor based on information submitted in an information disclosure statement filed during the period set forth in 37 CFR 1.97(c) with the fee set forth in 37 CFR 1.17(p).

Applicants filed a declaration under 37 CFR 1.131 on February 23, 2006 in response to the Non-Final Office Action mailed September 7, 2005 overcoming the 102 (e) reference of Sakuguchi and the 103 (a) rejection of Sakaguchi and in further view of Hareland. In the Final Office Action mailed June 2, 2006, Examiner finally rejected all claims under 102 (e) as being anticipated by the Hareland reference thus presenting a new ground of rejection.

The finality of the final rejection mailed June 2, 2006 is hereby withdrawn. The application file will be forwarded to the Technical Support Staff for Technology Center 2800 for further processing. If any questions, please contact Michael Lebentritt Supervisory Patent Examiner Art Unit 2812 @ 571-272-1873.

Sharon Gibson, Director
Technology Center 2800
Semiconductors, Electrical and Optical
Systems and Components

UNITED STATES PATENT AND TRADEMARK OFFICE

Commissioner for Patents
United States Patent and Trademark Office
P.O. Box 1450
Alexandria, VA 22313-1450
www.uspto.gov

EDWARD YOO C/O BENNETT JONES
1000 ATCO CENTRE
10035 - 105 STREET
EDMONTON, ALBERTA AB T5J3T-2 CA
CANADA

COPY MAILED

AUG 24 2007

OFFICE OF PETITIONS

In re Application of	:	
Thompson et al.	:	
Application No.: 10/710368	:	ON PETITION
Filing or 371(c) Date: 07/05/2004	:	
Attorney Docket Number:	:	
53797.23	:	

This is a decision on the Petition for Revival of an Application for Patent Abandoned Unintentionally Under 37 C.F.R. § 1.137(b), filed April 24, 2007.

This Petition is hereby **granted**.

Background

The above-identified application became abandoned for failure to timely reply to the non-final Office action, mailed May 16, 2006. The Office action set a three (3) period for reply. Extensions of time under 37 CFR 1.136(a) were available. No reply having been received, the application became abandoned on August 7, 2006. A Notice of Abandonment was mailed February 7, 2007.

Applicant files the present petition and includes an Amendment in response to the Office action. The petition satisfies the conditions for revival pursuant to the provisions of 37 CFR 1.137(b) in that (1) the reply in the form of an Amendment is filed with the present petition; (2) the petition fee; and (3) the required statement of unintentional delay. Accordingly, the reply is accepted as having been unintentionally delayed.

This application is being referred to Technology Center Art Unit 2831 for processing of the Amendment filed with the petition in due course.

Telephone inquiries concerning this decision should be directed to the undersigned at (571) 272-3232.

Derek L. Woods
Attorney
Office of Petitions

UNITED STATES PATENT AND TRADEMARK OFFICE

Commissioner for Patents
United States Patent and Trademark Office
P.O. Box 1450
Alexandria, VA 22313-1450
www.uspto.gov

COPY MAILED

OCT 0 1 2009

OFFICE OF PETITIONS

AKERMAN SENTERFITT
P.O. BOX 3188
WEST PALM BEACH FL 33402-3188

In re Application of	:	
TSUJI, Aki et al.	:	
Application No. 10/710,376	:	DECISION ON PETITION
Filed: July 06, 2004	:	TO WITHDRAW
Attorney Docket No. **9993-1**	:	FROM RECORD
	:	

This is a decision on the Request to Withdraw as attorney or agent of record under 37 C.F.R. § 1.36(b), filed September 22, 2009.

The request is **APPROVED**.

A grantable request to withdraw as attorney/agent of record must be signed by every attorney/agent seeking to withdraw or contain a clear indication that one attorney is signing on behalf of another/others. The Office requires the practitioner(s) requesting withdrawal to certify that he, she, or they have: (1) given reasonable notice to the client, prior to the expiration of the response period, that the practitioner(s) intends to withdraw from employment; (2) delivered to the client or a duly authorized representative of the client all papers and property (including funds) to which the client is entitled; and (3) notified the client of any responses that may be due and the time frame within which the client must respond, pursuant 37 CFR 10.40(c).

The request was signed by Andrew Gust on behalf of all attorneys of record who are associated with customer No. 30448. All attorneys/agents associated have been withdrawn. Applicant is reminded that there is no attorney of record at this time.

The request to change the correspondence address of record is not acceptable as the requested correspondence address is not that of: (1) the first named signing inventor; or (2) an intervening assignee of the entire interest under 37 C.F.R 3.71. All future communications from the Office will be directed to the first named signing inventor.

There is an outstanding Office action mailed August 14, 2009 that requires a reply from the applicant.

Telephone inquiries concerning this decision should be directed to Michelle R. Eason at 571-272-4231.

Michelle R. Eason
Paralegal Specialist
Office of Petitions

cc: **AKI TSUJI**
3-13-3 KAMOE, HAMAMTU-SHI
SIZUOKA-KEN 432-8023
JAPAN

cc: **TECNOTE CO., LTD.**
KAMOE 3-13-3, NAKA, HAMAMATSU CITY
SHIZUOKA-KEN 430-0913
JAPAN

UNITED STATES PATENT AND TRADEMARK OFFICE

Commissioner for Patents
United States Patent and Trademark Office
P.O. Box 1450
Alexandria, VA 22313-1450
www.uspto.gov

NAIPO (NORTH AMERICA INTERNATIONAL PATENT OFFICE)
P O BOX 506
MERRIFIELD, VA 22116

COPY MAILED

DEC 0 2 2004

OFFICE OF PETITIONS

In re Application of	:	
Wang-Sheng Chen; Tseng-Kuei Tseng	:	
Application No. 10/710,395	:	DECISION GRANTING STATUS
Filed: July 7, 2004	:	UNDER 37 CFR 1.47(a)
Attorney Docket No: ADTP0113USA	:	
	:	

This is in response to the petition under 37 CFR 1.47(a), filed July 20, 2004.

The petition is granted.

Petitioner has shown that the nonsigning inventor (Tseng-Kuei Tseng) has refused to join in the filing of the above-identified application.

The above-identified application and papers have been reviewed and found in compliance with 37 CFR 1.47(a). This application is hereby accorded Rule 1.47(a) status. As provided in Rule 1.47(c), this Office will forward notice of this application's filing to the nonsigning inventor at the address given in the petition. Notice of the filing of this application will also be published in the Official Gazette.

Telephone inquiries regarding this decision should be directed to the undersigned at (571) 272-3218.

This matter is being referred to Technology Center AU 1756.

Frances Hicks
Petitions Examiner
Office of Petitions
Office of the Deputy Commissioner
for Patent Examination Policy

UNITED STATES PATENT AND TRADEMARK OFFICE

UNITED STATES DEPARTMENT OF COMMERCE
United States Patent and Trademark Office
Address: COMMISSIONER FOR PATENTS
P.O. Box 1450
Alexandria, Virginia 22313-1450
www.uspto.gov

MCGARRY BAIR PC
32 Market Ave. SW
SUITE 500
GRAND RAPIDS, MI 49503

Mail Date: 04/20/2010

Applicant	: Robert L. Bingle	: DECISION ON REQUEST FOR
Patent Number	: 7619680	: RECALCULATION of PATENT
Issue Date	: 11/17/2009	: TERM ADJUSTMENT IN VIEW
Appliction No	: 10/710,412	: OF WYETH AND NOTICE OF INTENT TO
Filed	: 07/08/2004	: ISSUE CERTIFICATE OF CORRECTION
		:

The Request for Recalculation is **GRANTED** to the extent indicated.

The patent term adjustment has been determined to be **1499** days. The USPTO will *sua sponte* issue a certificate of correction reflecting the amount of PTA days determined by the recalculation.

Prior to the issuance of the certificate of correction, the USPTO will afford patentee an opportunity to be heard and request reconsideration. Accordingly, patentee has **one month or thirty (30) days**, whichever is longer, to file a request for reconsideration of this patent term adjustment calculation. See 35 U.S.C. 154(b)(3)(B)(ii) and 37 CFR 1.322(a)(4). No extensions of time will be granted under 37 CFR 1.136.

Patentee should use document code PET.OP if electronically filing a request for reconsideration of this patent term adjustment calculation. The patentee must also include the information required by 37 CFR 1.705(b)(2) and the fee required by 37 CFR 1.18(e). If patentee does not file a timely request for reconsideration of this patent term adjustment calculation including the information required by 37 CFR 1.705(b)(2) and the fee required by 37 CFR 1.18(e), the USPTO will issue a certificate of correction reflecting the PTA determination noted above.

Patentee should be aware that in order to preserve the right to review in the United States District Court for the District of Columbia of the USPTO patent term adjustment determination, patentee must ensure that he or she also take the steps required under 35 U.S.C. 154(b)(4)(A) in a timely manner. Nothing in the request for recalculation should be construed as providing an alternative time frame for commencing a civil action under 35 U.S.C. 154(b)(4)(A).

Any questions concerning this decision should be directed to the Office of Patent Legal Administration at 571-272-7702.

UNITED STATES PATENT AND TRADEMARK OFFICE

Commissioner for Patents
United States Patent and Trademark Office
P.O. Box 1450
Alexandria, VA 22313-1450
www.uspto.gov

DICKINSON WRIGHT PLLLC
38525 WOODWARD AVENUE, SUITE 2000
BLOOMFIELD HILLS, MI 48304-5092

COPY MAILED

FEB 17 2009

OFFICE OF PETITIONS

In re Application of :
Robert M. Schmidt et al :
Application No. 10/710,454 : ON PETITION
Filed: July 13, 2004 :
Attorney Docket No. 04923 (LC 0159 PUS) :

This is a decision on the petition under the unintentional provisions of 37 CFR 1.137(b), filed January 13, 2009, to revive the above-identified application.

The petition is **GRANTED.**

The application became abandoned for failure to timely file a reply within the meaning of 37 CFR 1.113 to the final Office action of June 12, 2007. The proposed reply required for consideration of a petition to revive must be a Notice of Appeal (and appeal fee required by 37 CFR 41.20(b)(2), an amendment that prima facie places the application in condition for allowance, a Request for Continued Examination and submission (37 CFR 1.114), or the filing of a continuing application under 37 CFR 1.53(b). See MPEP 711.03(c)(III)(A)(2). Three-month extension of time pursuant to the provisions of 37 CFR 1.136(a) was obtained. Accordingly, the date of abandonment of this application is December 13, 2007.

The petition satisfies the requirements of 37 CFR 1.137(b) in that petitioner has supplied (1) the reply in the form of a Request for Continued Examination (RCE) and fee of $810 and the submission required by 37 CFR 1.114; (2) the petition fee of $1620; and (3) a proper statement of unintentional delay.

Telephone inquiries concerning this decision should be directed to the undersigned at (571) 272-3210.

This application is being referred to Technology Center AU 3673 for processing of the RCE and for appropriate action by the Examiner in the normal course of business on the amendment submitted in accordance with 37 CFR 1.114.

Irvin Dingle
Petition Examiner
Office of Petitions

UNITED STATES PATENT AND TRADEMARK OFFICE

Commissioner for Patents
United States Patent and Trademark Office
P.O. Box 1450
Alexandria, VA 22313-1450
www.uspto.gov

CALFEE HALTER & GRISWOLD, LLP
800 SUPERIOR AVENUE
SUITE 1400
CLEVELAND OH 44114

COPY MAILED

OCT 26 2007

OFFICE OF PETITIONS

In re Application of	:	
Douglas A. Kemp et al	:	
Application No. 10/710,456	:	DECISION GRANTING PETITION
Filed: July 13, 2004	:	UNDER 37 CFR 1.313(c)(2)
Attorney Docket No. 27475/05432	:	

This is a decision on the petition under 37 CFR 1.313(c)(2), filed October 25, 2007, to withdraw the above-identified application from issue after payment of the issue fee.

The petition is **GRANTED**.

The above-identified application is withdrawn from issue for consideration of a submission under 37 CFR 1.114 (request for continued examination). *See* 37 CFR 1.313(c)(2).

Petitioner is advised that the issue fee paid on September 5, 2007 cannot be refunded. If, however, this application is again allowed, petitioner may request that it be applied towards the issue fee required by the new Notice of Allowance.[1]

Telephone inquiries should be directed to the undersigned at (571) 272-3208.

This application is being referred to Technology Center AU 3751 for processing of the request for continued examination under 37 CFR 1.114 and for consideration of the concurrently filed IDS.

Karen Creasy

Karen Creasy
Petitions Examiner
Office of Petitions

---

[1] *The request to apply the issue fee to the new Notice may be satisfied by completing and returning the new Part B – Fee(s) Transmittal Form (along with any balance due at the time of submission). Petitioner is advised that the Issue Fee Transmittal Form* ***must*** *be completed and timely submitted to avoid abandonment of the application.*

UNITED STATES PATENT AND TRADEMARK OFFICE

UNITED STATES DEPARTMENT OF COMMERCE
United States Patent and Trademark Office
Address: COMMISSIONER FOR PATENTS
P.O. Box 1450
Alexandria, Virginia 22313-1450
www.uspto.gov

FORD GLOBAL TECHNOLOGIES, LLC
FAIRLANE PLAZA SOUTH, SUITE 800
330 TOWN CENTER DRIVE
DEARBORN, MI 48126

Mail Date: 07/02/2010

Applicant	: Kevin Ellwood	: DECISION ON REQUEST FOR
Patent Number	: 7638226	: RECALCULATION of PATENT
Issue Date	: 12/29/2009	: TERM ADJUSTMENT IN VIEW
Application No	: 10/710,459	: OF WYETH AND NOTICE OF INTENT TO
Filed	: 07/13/2004	: ISSUE CERTIFICATE OF CORRECTION
		:

The Request for Recalculation is **GRANTED** to the extent indicated.

The patent term adjustment has been determined to be **1558** days. The USPTO will *sua sponte* issue a certificate of correction reflecting the amount of PTA days determined by the recalculation.

Prior to the issuance of the certificate of correction, the USPTO will afford patentee an opportunity to be heard and request reconsideration. Accordingly, patentee has **one month or thirty (30) days**, whichever is longer, to file a request for reconsideration of this patent term adjustment calculation. See 35 U.S.C. 154(b)(3)(B)(ii) and 37 CFR 1.322(a)(4). No extensions of time will be granted under 37 CFR 1.136.

Patentee should use document code PET.OP if electronically filing a request for reconsideration of this patent term adjustment calculation. The patentee must also include the information required by 37 CFR 1.705(b)(2) and the fee required by 37 CFR 1.18(e). If patentee does not file a timely request for reconsideration of this patent term adjustment calculation including the information required by 37 CFR 1.705(b)(2) and the fee required by 37 CFR 1.18(e), the USPTO will issue a certificate of correction reflecting the PTA determination noted above.

Patentee should be aware that in order to preserve the right to review in the United States District Court for the District of Columbia of the USPTO patent term adjustment determination, patentee must ensure that he or she also take the steps required under 35 U.S.C. 154(b)(4)(A) in a timely manner. Nothing in the request for recalculation should be construed as providing an alternative time frame for commencing a civil action under 35 U.S.C. 154(b)(4)(A).

Any questions concerning this decision should be directed to the Office of Patent Legal Administration at 571-272-7702.

UNITED STATES PATENT AND TRADEMARK OFFICE

Commissioner for Patents
United States Patent and Trademark Office
P.O. Box 1450
Alexandria, VA 22313-1450
www.uspto.gov

ALBIHNS STOCKHOLM AB
BOX 5581, LINNEGATAN 2
SE-114 85 STOCKHOLM; SWEDENn
STOCKHOLM SE SWEDEN

COPY MAILED

OCT 18 2006

OFFICE OF PETITIONS

In re Application of :
FUNK, et al. :
Application No. 10/710,474 : DECISION ON PETITION
Filed: July 14, 2004 : TO WITHDRAW
Attorney Docket No. 75416 : FROM RECORD
:

This is a decision on the Request to Withdraw as attorney or agent of record under 37 C.F.R. § 1.36(b), filed June 29, 2006.

The request is **NOT APPROVED**.

A grantable request to withdraw as attorney/agent of record must be signed by every attorney/agent seeking to withdraw or contain a clear indication that one attorney is signing on behalf of another/others. A request to withdraw will not be approved unless at least 30 (thirty) days would remain between the date of approval and the later of the expiration date of a time to file a response or the expiration date of the maximum time period which can be extended under 37 C.F.R. § 1.136(a).

The request to withdraw less than all attorneys appointed by customer number 26288 cannot be approved. The addition and/or deletion of a practitioner from the list of practitioners associated with a Customer Number should be made by submitting a "Request for Customer Number Data Change" (PTO/SB/124) which will result in the addition or deletion of such practitioner from the list of persons authorized to represent any applicant or assignee of the entire interest who appointed all of the practitioners associated with such Customer Number. See MPEP 403 Section I. Customer Number Practice. The correspondence address of record remains unchanged.

Telephone inquiries concerning this decision should be directed to Monica A. Graves at 571-272-7253.

David Bucci
Petitions Examiner
Office of Petitions

UNITED STATES PATENT AND TRADEMARK OFFICE

Commissioner for Patents
United States Patent and Trademark Office
P.O. Box 1450
Alexandria, VA 22313-1450
www.uspto.gov

SCHLUMBERGER RESERVOIR COMPLETIONS
14910 AIRLINE ROAD
ROSHARON TX 77583

COPY MAILED

MAY 21 2007

OFFICE OF PETITIONS

In re Application of	:	
Du, et al.	:	
Application No. 10/710,492	:	DECISION ON PETITION
Filed: July 15, 2004	:	
Attorney Docket No. 68.0419	:	

This is a decision on the petition under 37 CFR 1.182, filed January 2, 2007, to change the order of the names of the inventors.

The petition is **GRANTED**.

Office records have been corrected to reflect the change in the order of the named inventors. A corrected Filing Receipt, which sets forth the desired order of the named inventors, accompanies this decision on petition.

Petitioner paid a $130.00 processing fee. A $400.00 petition fee is required. As authorized, the $270 balance due will be charged to deposit account no. 50-0457.

This application is being referred to Publications Division for processing into a patent.

Telephone inquiries regarding this decision should be directed to the undersigned at (571) 272-

Shirene Willis Brantley
Senior Petitions Attorney
Office of Petitions

ATTACHMENT: Corrected Filing Receipt

UNITED STATES PATENT AND TRADEMARK OFFICE

UNITED STATES DEPARTMENT OF COMMERCE
United States Patent and Trademark Office
Address: COMMISSIONER FOR PATENTS
P.O. Box 1450
Alexandria, Virginia 22313-1450
www.uspto.gov

APPL NO.	FILING OR 371(c) DATE	ART UNIT	FIL FEE REC'D	ATTY.DOCKET NO	TOT CLMS	IND CLMS
10/710,492	07/15/2004	3672	1638	68.0419	42	5

CONFIRMATION NO. 4491

CORRECTED FILING RECEIPT

OC000000023937335

35204
SCHLUMBERGER RESERVOIR COMPLETIONS
14910 AIRLINE ROAD
ROSHARON, TX 77583

Date Mailed: 05/18/2007

Receipt is acknowledged of this regular Patent Application. It will be considered in its order and you will be notified as to the results of the examination. Be sure to provide the U.S. APPLICATION NUMBER, FILING DATE, NAME OF APPLICANT, and TITLE OF INVENTION when inquiring about this application. Fees transmitted by check or draft are subject to collection. Please verify the accuracy of the data presented on this receipt. **If an error is noted on this Filing Receipt, please mail to the Commissioner for Patents P.O. Box 1450 Alexandria Va 22313-1450. Please provide a copy of this Filing Receipt with the changes noted thereon. If you received a "Notice to File Missing Parts" for this application, please submit any corrections to this Filing Receipt with your reply to the Notice. When the USPTO processes the reply to the Notice, the USPTO will generate another Filing Receipt incorporating the requested corrections (if appropriate).**

Applicant(s)

Dennis M. Read JR., Manvel, TX;
Micheal Hui Du, Pearland, TX;

Assignment For Published Patent Application

SCHLUMBERGER TECHNOLOGY CORPORATION, Sugar Land, TX

Power of Attorney: The patent practitioners associated with Customer Number **35204**.

Domestic Priority data as claimed by applicant

This appln claims benefit of 60/503,024 09/15/2003

Foreign Applications

If Required, Foreign Filing License Granted: 08/16/2004

The country code and number of your priority application, to be used for filing abroad under the Paris Convention, is US10/710,492

Projected Publication Date: Not Applicable

Non-Publication Request: No

Early Publication Request: No

Title

WELL TOOL PROTECTION SYSTEM AND METHOD

Preliminary Class

166

PROTECTING YOUR INVENTION OUTSIDE THE UNITED STATES

Since the rights granted by a U.S. patent extend only throughout the territory of the United States and have no effect in a foreign country, an inventor who wishes patent protection in another country must apply for a patent in a specific country or in regional patent offices. Applicants may wish to consider the filing of an international application under the Patent Cooperation Treaty (PCT). An international (PCT) application generally has the same effect as a regular national patent application in each PCT-member country. The PCT process **simplifies** the filing of patent applications on the same invention in member countries, but **does not result** in a grant of "an international patent" and does not eliminate the need of applicants to file additional documents and fees in countries where patent protection is desired.

Almost every country has its own patent law, and a person desiring a patent in a particular country must make an application for patent in that country in accordance with its particular laws. Since the laws of many countries differ in various respects from the patent law of the United States, applicants are advised to seek guidance from specific foreign countries to ensure that patent rights are not lost prematurely.

Applicants also are advised that in the case of inventions made in the United States, the Director of the USPTO must issue a license before applicants can apply for a patent in a foreign country. The filing of a U.S. patent application serves as a request for a foreign filing license. The application's filing receipt contains further information and guidance as to the status of applicant's license for foreign filing.

Applicants may wish to consult the USPTO booklet, "General Information Concerning Patents" (specifically, the section entitled "Treaties and Foreign Patents") for more information on timeframes and deadlines for filing foreign patent applications. The guide is available either by contacting the USPTO Contact Center at 800-786-9199, or it can be viewed on the USPTO website at http://www.uspto.gov/web/offices/pac/doc/general/index.html.

For information on preventing theft of your intellectual property (patents, trademarks and copyrights), you may wish to consult the U.S. Government website, http://www.stopfakes.gov. Part of a Department of Commerce initiative, this website includes self-help "toolkits" giving innovators guidance on how to protect intellectual property in specific countries such as China, Korea and Mexico. For questions regarding patent enforcement issues, applicants may call the U.S. Government hotline at 1-866-999-HALT (1-866-999-4158).

LICENSE FOR FOREIGN FILING UNDER
Title 35, United States Code, Section 184
Title 37, Code of Federal Regulations, 5.11 & 5.15

GRANTED

The applicant has been granted a license under 35 U.S.C. 184, if the phrase "IF REQUIRED, FOREIGN FILING LICENSE GRANTED" followed by a date appears on this form. Such licenses are issued in all applications where the conditions for issuance of a license have been met, regardless of whether or not a license may be required as set forth in 37 CFR 5.15. The scope and limitations of this license are set forth in 37 CFR 5.15(a) unless an earlier license has been issued under 37 CFR 5.15(b). The license is subject to revocation upon written notification. The date indicated is the effective date of the license, unless an earlier license of similar scope has been granted under 37 CFR 5.13 or 5.14.

This license is to be retained by the licensee and may be used at any time on or after the effective date thereof unless it is revoked. This license is automatically transferred to any related applications(s) filed under 37 CFR 1.53(d). This license is not retroactive.

The grant of a license does not in any way lessen the responsibility of a licensee for the security of the subject matter as imposed by any Government contract or the provisions of existing laws relating to espionage and the national security or the export of technical data. Licensees should apprise themselves of current regulations especially with respect to certain countries, of other agencies, particularly the Office of Defense Trade Controls, Department of State (with respect to Arms, Munitions and Implements of War (22 CFR 121-128)); the Bureau of Industry and Security, Department of Commerce (15 CFR parts 730-774); the Office of Foreign Assets Control, Department of Treasury (31 CFR Parts 500+) and the Department of Energy.

NOT GRANTED

No license under 35 U.S.C. 184 has been granted at this time, if the phrase "IF REQUIRED, FOREIGN FILING LICENSE GRANTED" DOES NOT appear on this form. Applicant may still petition for a license under 37 CFR 5.12, if a license is desired before the expiration of 6 months from the filing date of the application. If 6 months has lapsed from the filing date of this application and the licensee has not received any indication of a secrecy order under 35 U.S.C. 181, the licensee may foreign file the application pursuant to 37 CFR 5.15(b).

UNITED STATES PATENT AND TRADEMARK OFFICE

COMMISSIONER FOR PATENTS
UNITED STATES PATENT AND TRADEMARK OFFICE
P.O. BOX 1450
ALEXANDRIA, VA 22313-1450
www.uspto.gov

MAIL

NOV 0 8 2004

DIRECTOR OFFICE
TECHNOLOGY CENTER 2600

DALINA LAW GROUP, P.C.
7910 IVANHOE AVE. #325
LA JOLLA, CA 92037

In re Application of
Koselka, et al.
Application No. 10/710,512
Filed: July 16 2004
For: ANGLED AXIS MACHINE VISION SYSTEM AND METHOD

DECISION ON PETITION TO MAKE SPECIAL

This is a decision on the petition filed September 1, 2004 pursuant to Manual of Patent Examination Procedure §708.02, section VIII, requesting accelerated.

The petition under Manual of Patent Examination Procedure §708.02, VIII, must:
(1) be filed prior to receiving any examination by the examiner,
(2) be accompanied by the required fee- $130,
(3) the claims should be directed to a single invention (if it is determined that the claims pertain to more than one invention, then applicant will have to make an election without traverse or forfeit accelerated examination status),
(4) state that a pre-examination search was made, and fully discuss the search method employed, such as classes and subclasses searched, publications, Chemical abstracts, patents, etc. A search made by a foreign patent office satisfies this requirement,
(5) be accompanied by a copy of each of the references most closely related to the subject matter encompassed by the claims if said references are not already of record,
(6) fully discuss the references, pointing out with the particularity required by 37 C.F.R. §1.111 (b) and (c), how the claimed subject matter is patentable over the references.

The petitioner meets all the above-listed requirements. Accordingly, the petition is **GRANTED**.

The application will retain its special status throughout its entire prosecution, including any appeal to the Board of Patent Appeals and Interferences, subject only to diligent prosecution by the applicant. The application file is being forwarded to the examiner for appropriate action in due course.

Kenneth A. Wieder
Special Program Examiner
Technology Center 2600
Communications
(571) 272-2986

IN THE UNITED STATES PATENT AND TRADEMARK OFFICE

In re the application of: **Larry V. Presley & Clarence S. Sanscrainte**

Serial No:	**Unassigned**	Group Art Unit:	**Unassigned**
Filed:	**Herewith**	Examiner:	**Unassigned**

For: APPARATUS AND METHOD FOR NEUTRALIZING TOXIC WASTE WATER AND DESTROYING ORGANIC COMPOUNDS

PETITION TO MAKE SPECIAL BECAUSE OF APPLICANT'S AGE

Commissioner of Patents and Trademarks
Washington, DC 20231

Dear Sir:

Applicant hereby petitions to make this application special because of the applicant's age. Specifically, I am more than sixty-five years old, having been born on AUG. 3, 1925. This petition is submitted without any fee as permitted by 37 C.F.R. 1.102(c). I hereby declare that all statements made herein of my own knowledge are true and that all statements made on information and belief are believed to be true; and further that these statements were made on information and belief are believed to be true; further that these statements were made with the knowledge that willful false statements and the like so made are punishable by fine or imprisonment, or both under Section 1001 of Title 18 U.S.C. and that such willful false statements may jeopardize the validity of the application or any patent issued thereon.

Sincerely yours,

Signature: _____ Date: 07/18/04

Name: Clarence S. Sanscrainte

Address: 840 SW 1st Ave Pompono Beach, FL 33060

NOV 30 2004

SN 10/710518

PETITION GRANTED

Richard Crispino
Special Program Examiner
TC 1700

UNITED STATES PATENT AND TRADEMARK OFFICE

COMMISSIONER FOR PATENTS
UNITED STATES PATENT AND TRADEMARK OFFICE
P.O. BOX 1450
ALEXANDRIA, VA 22313-1450
www.uspto.gov

GREENBERG & LIEBERMAN, LLC
2141 WISCONSIN AVE, N.W.
SUITE C-2
WASHINGTON, DC 20007

COPY MAILED

DEC 22 2005

OFFICE OF PETITIONS

In re Application of :
Hobson : DECISION ON PETITION
Application No. 10/710,520 :
Filed: July 18, 2004 :
Atty. Dkt. No.: 228412082003 :

This is a decision on the petition under 37 C.F.R. § 1.137(b), filed November 21, 2005, to revive the above-identified application.

The petition is **GRANTED**.

This application became abandoned March 29, 2005 for failure to timely reply to the non-final Office action mailed December 28, 2004. The non-final Office action set a three month shortened statutory period of time for reply. No petition for extension of time in accordance with 37 C.F.R. § 1.136 was timely submitted. Notice of Abandonment was mailed October 5, 2005.

A grantable petition pursuant to 37 C.F.R. § 1.137(b) must be accompanied by: (1) the required reply to the outstanding Office action or notice, unless previously filed; (2) the petition fee as set forth in 37 C.F.R. § 1.17(m); (3) a statement that the entire delay in filing the required reply from the due date for the reply until the filing of a grantable petition pursuant to 37 C.F.R. § 1.137(b) was unintentional; and (4) any terminal disclaimer (and fee set forth in 37 C.F.R. § 1.20(d)) required pursuant to 37 C.F.R. § 1.137(c).

The instant petition has been reviewed and found in compliance with the provisions of 37 C.F.R. § 1.137(b). Accordingly, the failure to timely submit a proper reply to the non-final Office action is accepted as having been unintentionally delayed.

This application will be forwarded to Technology Center 3600 for further processing.

Telephone inquiries concerning this matter may be directed to the undersigned at (571) 272-3205.

Alesia M. Brown
Petitions Attorney
Office of Petitions

UNITED STATES PATENT AND TRADEMARK OFFICE

Commissioner for Patents
United States Patent and Trademark Office
P.O. Box 1450
Alexandria, VA 22313-1450
www.uspto.gov

LAITRAM L.L.C.
LEGAL DEPARTMENT
220 LAITRAM LANE
HARAHAN, LA 70123

COPY MAILED

NOV 23 2005

OFFICE OF PETITIONS

In re Application of :
Kyle J. Sedlacek :
Application No. 10/710,528 : ON PETITION
Filed: July 19, 2004 :
Attorney Docket No. 2226.0

This is a decision on the petition, filed November 21, 2005 under 37 CFR 1.313(c)(2) to withdraw the above-identified application from issue after payment of the issue fee.

The petition is **GRANTED**.

The above-identified application is withdrawn from issue for consideration of a submission under 37 CFR 1.114 (request for continued examination). See 37 CFR 1.313(c)(2).

Petitioner is advised that the issue fee paid on November 8, 2005 in the above-identified application cannot be refunded. If, however, the above-identified application is again allowed, petitioner may request that it be applied towards the issue fee required by the new Notice of Allowance.[1]

Telephone inquiries should be directed to Irvin Dingle at (571) 272-3210.

This matter is being referred to Technology Center AU 3651 for processing of the request for continued examination under 37 CFR 1.114 and for consideration of the concurrently filed Information Disclosure Statement.

Irvin Dingle
Petitions Examiner
Office of Petitions

[1] The request to apply the issue fee to the new Notice may be satisfied by completing and returning the new Issue Fee Transmittal Form PTOL-85(b), which includes the following language thereon: Commissioner for Patents is requested to apply the Issue Fee and Publication Fee (if any) or re-apply any previously paid issue fee to the application identified above. Petitioner is advised that, whether a fee is indicated as being due or not, the Issue Fee Transmittal Form **must** be completed and timely submitted to avoid abandonment. Note the language in bold text on the first page of the Notice of Allowance and Fee(s) Due (PTOL-85).

UNITED STATES PATENT AND TRADEMARK OFFICE

Commissioner for Patents
United States Patent and Trademark Office
P.O. Box 1450
Alexandria, VA 22313-1450
www.uspto.gov

JJGJR.: 04-07

Paper No: __

KIMBERLY DEMOROTSKI
4408 GOODRICH ROAD
VALPARAISO IN 46385

COPY MAILED

APR 23 2007

OFFICE OF PETITIONS

In re Application of :
Demorotski :
Application No.: 10/710,546 :
Filing Date: 20 July, 2004 :
Attorney Docket No. (None) :

DECISION

This is a decision on the letter considered as a petition filed on 31 October, 2006, to revive the instant application under 37 C.F.R. §1.137(b) as having as abandoned due to unintentional delay.

Petitioner's submission suggests a lack of familiarity with practice before the Office. Petitioner may wish to seek the guidance of one registered to practice before the Office, which information may be found at www.uspto.gov.

If Petitioner intends to prosecute the instant application without assistance of Counsel, Petitioner will find forms and fee information at http://www.uspto.gov/web/forms/index.html#patent and http://www.uspto.gov/main/howtofees.htm, respectively.

Further, Petitioner will find guidance as to the practice before the Office in the Manual of Patent Examining Procedure (MPEP)–specifics as to the revival of applications may be found at http://www.uspto.gov/web/offices/pac/mpep/mpep.htm .

For the reasons set forth below the petition as considered under 37 C.F.R. §1.137(b) is **DISMISSED**.

NOTES:

(1) Any petition (and fee) for reconsideration of this decision must be submitted within two (2) months from the mail date of this decision. Extensions of time under 37 C.F.R. §1.136(a) are permitted. The reconsideration request should include a cover letter entitled "Renewed Petition under 37 C.F.R. §1.137(b)."

(2) Thereafter, there will be no further reconsideration of this matter.

BACKGROUND

The record reflects that:

- Petitioner failed to reply timely and properly to the final Office action mailed on 21 March, 2006 (copy enclosed), with reply due absent extension of time on or before 21 June, 2006;
- the application went abandoned by operation of law after midnight 21 June, 2006;
- the Office mailed the Notice of Abandonment on 2 October, 2006;
- with the instant letter considered as a petition (form(s) enclosed), Petitioner has failed to file the fee, the required reply to the outstanding Office action, and has failed to make the statement of unintentional delay (in the petition form).

The requirements of a petition under 37 C.F.R. §1.137(b) are the petition, fee reply to the outstanding Office action, statement of unintentional delay, and, where appropriate, a terminal disclaimer and fee.

Out of an abundance of caution, Petitioners always are reminded that those registered to practice *and* all others who make representations before the Office are reminded to inquire into the underlying facts of representations made to the Office and support averments with the appropriate documentation–since all owe to the Office the continuing duty to disclose.[1]

---

[1] See supplement of 17 June, 1999. The Patent and Trademark Office is relying on petitioner's duty of candor and good faith and accepting a statement made by Petitioner. See Changes to Patent Practice and Procedure, 62 Fed. Reg. at 53160 and 53178, 1203 Off. Gaz. Pat. Office at 88 and 103 (responses to comments 64 and 109)(applicant obligated under 37 C.F.R. §10.18 to inquire into the underlying facts and circumstances when providing statements to the Patent and Trademark Office).

Specifically, the regulations at 37 C.F.R. §10.18 provide:

§ 10.18 Signature and certificate for correspondence filed in the Patent and Trademark Office.
(a) For all documents filed in the Office in patent, trademark, and other non-patent matters, except for correspondence that is required to be

STATUTES, REGULATIONS AND ANALYSIS

Congress has authorized the Commissioner to "revive an application if the delay is shown to the satisfaction of the Commissioner to have been "unavoidable." 35 U.S.C. §133 (1994).[2]

The regulations at 37 C.F.R. §1.137(a) and (b) set forth the requirements for a petitioner to revive a previously unavoidably or unintentionally, respectively, abandoned application under this congressional grant of authority. The language of 35 U.S.C. §133 and 37 C.F.R. §1.137(a) is clear, unambiguous, and without qualification: the delay in tendering the reply to the outstanding Office action, as well as filing the first petition seeking revival, must have been unavoidable for

---

signed by the applicant or party, each piece of correspondence filed by a practitioner in the Patent and Trademark Office must bear a signature by such practitioner complying with the provisions of §1.4(d), §1.4(e), or § 2.193(c)(1) of this chapter.
(b) By presenting to the Office (whether by signing, filing, submitting, or later advocating) any paper, the party presenting such paper, whether a practitioner or non-practitioner, is certifying that—

(1) All statements made therein of the party's own knowledge are true, all statements made therein on information and belief are believed to be true, and all statements made therein are made with the knowledge that whoever, in any matter within the jurisdiction of the Patent and Trademark Office, knowingly and willfully falsifies, conceals, or covers up by any trick, scheme, or device a material fact, or makes any false, fictitious or fraudulent statements or representations, or makes or uses any false writing or document knowing the same to contain any false, fictitious or fraudulent statement or entry, shall be subject to the penalties set forth under 18 U.S.C. 1001, and that violations of this paragraph may jeopardize the validity of the application or document, or the validity or enforceability of any patent, trademark registration, or certificate resulting therefrom; and

(2) To the best of the party's knowledge, information and belief, formed after an inquiry reasonable under the circumstances, that —

(i) The paper is not being presented for any improper purpose, such as to harass someone or to cause unnecessary delay or needless increase in the cost of prosecution before the Office;

(ii) The claims and other legal contentions therein are warranted by existing law or by a nonfrivolous argument for the extension, modification, or reversal of existing law or the establishment of new law;

(iii) The allegations and other factual contentions have evidentiary support or, if specifically so identified, are likely to have evidentiary support after a reasonable opportunity for further investigation or discovery; and

(iv) The denials of factual contentions are warranted on the evidence, or if specifically so identified, are reasonably based on a lack of information or belief.

(c) Violations of paragraph (b)(1) of this section by a practitioner or non-practitioner may jeopardize the validity of the application or document, or the validity or enforceability of any patent, trademark registration, or certificate resulting therefrom. Violations of any of paragraphs (b)(2)(i) through (iv) of this section are, after notice and reasonable opportunity to respond, subject to such sanctions as deemed appropriate by the Commissioner, or the Commissioner's designee, which may include, but are not limited to, any combination of —

(1) Holding certain facts to have been established;
(2) Returning papers;
(3) Precluding a party from filing a paper, or presenting or contesting an issue;
(4) Imposing a monetary sanction;
(5) Requiring a terminal disclaimer for the period of the delay; or
(6) Terminating the proceedings in the Patent and Trademark Office.

(d) Any practitioner violating the provisions of this section may also be subject to disciplinary action. See § 10.23(c)(15).
[Added 50 FR 5175, Feb. 6, 1985, effective Mar. 8, 1985; para. (a) revised, 58 FR 54494, Oct. 22, 1993, effective Nov. 22, 1993; paras. (a) & (b) revised, paras. (c) & (d) added, 62 FR 53131, Oct. 10, 1997, effective Dec. 1, 1997; para. (a) revised, 69 FR 56481, Sept. 21, 2004, effective Oct. 21, 2004]

[2] 35 U.S.C. §133 provides:

35 U.S.C. §133 Time for prosecuting application.
Upon failure of the applicant to prosecute the application within six months after any action therein, of which notice has been given or mailed to the applicant, or within such shorter time, not less than thirty days, as fixed by the Commissioner in such action, the application shall be regarded as abandoned by the parties thereto, unless it be shown to the satisfaction of the Commissioner that such delay was unavoidable.

the reply now to be accepted on petition.[3]

Delays in responding properly raise the question whether delays are unavoidable.[4] Where there is a question whether the delay was unavoidable, Petitioners must meet the burden of establishing that the delay was unavoidable within the meaning of 35 U.S.C. §133 and 37 C.F.R. §1.137(a).[5] And the Petitioner must be diligent in attending to the matter.[6] Failure to do so does not constitute the care required under Pratt, and so cannot satisfy the test for diligence and due care.

(By contrast, unintentional delays are those that do not satisfy the very strict statutory and regulatory requirements of unavoidable delay, and also, by definition, are not intentional.[7]))

Allegations as to
Unintentional Delay

The requirements for a grantable petition under 37 C.F.R. §1.137(b) are the petition and fee, a statement/showing of unintentional delay, a proper reply, and–where appropriate--a terminal disclaimer and fee if the application was filed before 8 June, 1995.

It appears as of this writing that Petitioner has yet to satisfy the "fee," the "reply" and the "statement/showing" requirements under the regulation. (Petitioner may review the commentary set forth at MPEP §711.03(c) and the language at 37 C.F.R. §1.137(b) for guidance.) Petitioner also should review the discussion in the BACKGROUND, above, before resubmitting a petition.

CONCLUSION

The petition as considered under 37 C.F.R. §1.137(b) is **dismissed**.

---

[3] Therefore, by example, an unavoidable delay in the payment of the Filing Fee might occur if a reply is shipped by the US Postal Service, but due to catastrophic accident, the delivery is not made.

[4] See: *Changes to Patent Practice and Procedure*; *Final Rule Notice*, 62 *Fed. Reg.* at 53158-59 (October 10, 1997), 1203 *Off. Gaz. Pat. Office* at 86-87 (October 21, 1997).

[5] See: In re Application of G, 11 USPQ2d 1378, 1380 (Comm'r Pats. 1989).

[6] See: Diligence in Filing Petitions to Revive and Petitions to Withdraw the Holding of Abandonment, 1124 Off. Gaz. Pat. Office 33 (March 19, 1991). It was and is Petitioner's burden to exercise diligence in seeking either to have the holding of abandonment withdrawn or the application revived. See 1124 Off. Gaz. Pat. Office supra.

[7] Therefore, by example, an unintentional delay in the reply might occur if the reply and transmittal form are to be prepared for shipment by the US Postal Service, but other pressing matters distract one's attention and the mail is not timely deposited for shipment.

Further correspondence with respect to this matter should be addressed as follows:[8]

By mail: Commissioner for Patents[9]
P.O. Box 1450
Alexandria, VA 22313-1450

By FAX: IFW Formal Filings
(571) 273-8300
ATTN.: Office of Petitions

By hand: Mail Stop: Petition
Customer Service Window
Randolph Building
401 Dulany Street
Alexandria, VA 22314

While telephone inquiries regarding this decision may be directed to the undersigned at (571) 272-3214, it is noted that all practice before the Office is in writing (see: 37 C.F.R. §1.2[10]) and the proper authority for action on any matter in this regard are the statutes (35 U.S.C.), regulations (37 C.F.R.) and the commentary on policy (MPEP). Therefore, no telephone discussion may be controlling or considered authority for Petitioner's action(s).

John J. Gillon, Jr.
Senior Attorney
Office of Petitions

Encl:
21 March, 2006 Office action
Petition forms

---

[8] On July 15, 2005, the Central Facsimile (FAX) Number changed to (571) 273-8300. The number (571) 273-8300 is be the only facsimile number recognized for centralized delivery. (For further information. see: http://www.uspto.gov/web/offices/pac/dapp/opla/preognotice/cfax062005.pdf .)

[9] To determine the appropriate addresses for other subject-specific correspondence, refer to the USPTO Web site at www.uspto.gov.

[10] The regulations at 37 C.F.R. §1.2 provide:

§1.2 Business to be transacted in writing.

All business with the Patent and Trademark Office should be transacted in writing.The personal attendance of applicants or their attorneys or agents at the Patent and Trademark Office is unnecessary. The action of the Patent and Trademark Office will be based exclusively on the written record in the Office. No attention will be paid to any alleged oral promise, stipulation,or understanding in relation to which there is disagreement or doubt.

UNITED STATES PATENT AND TRADEMARK OFFICE

UNITED STATES DEPARTMENT OF COMMERCE
United States Patent and Trademark Office
Address: COMMISSIONER FOR PATENTS
P.O. Box 1450
Alexandria, Virginia 22313-1450
www.uspto.gov

APPLICATION NO.	FILING DATE	FIRST NAMED INVENTOR	ATTORNEY DOCKET NO.	CONFIRMATION NO.
10/710,546	07/20/2004	Kimberly Kay Demorotski		4545

45929 7590 03/21/2006

KIMBERLY DEMOROTSKI
4408 GOODRICH ROAD
VALPARAISO, IN 46385

EXAMINER	
POLLICOFF, STEVEN B	

ART UNIT	PAPER NUMBER
3728	

DATE MAILED: 03/21/2006

Please find below and/or attached an Office communication concerning this application or proceeding.

E

Office Action Summary	Application No.	Applicant(s)	
	10/710,546	DEMOROTSKI, KIMBERLY KAY	
	Examiner	Art Unit	
	Steven B. Pollicoff	3728	

– The MAILING DATE of this communication appears on the cover sheet with the correspondence address –

Period for Reply

A SHORTENED STATUTORY PERIOD FOR REPLY IS SET TO EXPIRE 3 MONTH(S) OR THIRTY (30) DAYS, WHICHEVER IS LONGER, FROM THE MAILING DATE OF THIS COMMUNICATION.

- Extensions of time may be available under the provisions of 37 CFR 1.136(a). In no event, however, may a reply be timely filed after SIX (6) MONTHS from the mailing date of this communication.
- If NO period for reply is specified above, the maximum statutory period will apply and will expire SIX (6) MONTHS from the mailing date of this communication.
- Failure to reply within the set or extended period for reply will, by statute, cause the application to become ABANDONED (35 U.S.C. § 133). Any reply received by the Office later than three months after the mailing date of this communication, even if timely filed, may reduce any earned patent term adjustment. See 37 CFR 1.704(b).

Status

1)☒ Responsive to communication(s) filed on *20 July 2004*.

2a)☐ This action is **FINAL**. 2b)☒ This action is non-final.

3)☐ Since this application is in condition for allowance except for formal matters, prosecution as to the merits is closed in accordance with the practice under *Ex parte Quayle*, 1935 C.D. 11, 453 O.G. 213.

Disposition of Claims

4)☒ Claim(s) 1 is/are pending in the application.

4a) Of the above claim(s) _____ is/are withdrawn from consideration.

5)☐ Claim(s) _____ is/are allowed.

6)☒ Claim(s) 1 is/are rejected.

7)☐ Claim(s) _____ is/are objected to.

8)☐ Claim(s) _____ are subject to restriction and/or election requirement.

Application Papers

9)☒ The specification is objected to by the Examiner.

10)☐ The drawing(s) filed on _____ is/are: a)☐ accepted or b)☐ objected to by the Examiner.

Applicant may not request that any objection to the drawing(s) be held in abeyance. See 37 CFR 1.85(a).

Replacement drawing sheet(s) including the correction is required if the drawing(s) is objected to. See 37 CFR 1.121(d).

11)☐ The oath or declaration is objected to by the Examiner. Note the attached Office Action or form PTO-152.

Priority under 35 U.S.C. § 119

12)☐ Acknowledgment is made of a claim for foreign priority under 35 U.S.C. § 119(a)-(d) or (f).

a)☐ All b)☐ Some * c)☐ None of:

1.☐ Certified copies of the priority documents have been received.

2.☐ Certified copies of the priority documents have been received in Application No. _____.

3.☐ Copies of the certified copies of the priority documents have been received in this National Stage application from the International Bureau (PCT Rule 17.2(a)).

* See the attached detailed Office action for a list of the certified copies not received.

Attachment(s)

1) ☒ Notice of References Cited (PTO-892)
2) ☐ Notice of Draftsperson's Patent Drawing Review (PTO-948)
3) ☐ Information Disclosure Statement(s) (PTO-1449 or PTO/SB/08) Paper No(s)/Mail Date _____.
4) ☐ Interview Summary (PTO-413) Paper No(s)/Mail Date. _____.
5) ☐ Notice of Informal Patent Application (PTO-152)
6) ☐ Other: _____.

DETAILED ACTION

Drawings

1. The subject matter of this application admits of illustration by a drawing to facilitate understanding of the invention. Applicant is required to furnish a drawing under 37 CFR 1.81(c). No new matter may be introduced in the required drawing. Each drawing sheet submitted after the filing date of an application must be labeled in the top margin as either "Replacement Sheet" or "New Sheet" pursuant to 37 CFR 1.121(d).

Specification

2. Applicant is reminded of the proper content of an abstract of the disclosure.

A patent abstract is a concise statement of the technical disclosure of the patent and should include that which is new in the art to which the invention pertains. If the patent is of a basic nature, the entire technical disclosure may be new in the art, and the abstract should be directed to the entire disclosure. If the patent is in the nature of an improvement in an old apparatus, process, product, or composition, the abstract should include the technical disclosure of the improvement. In certain patents, particularly those for compounds and compositions, wherein the process for making and/or the use thereof are not obvious, the abstract should set forth a process for making and/or use thereof. If the new technical disclosure involves modifications or alternatives, the abstract should mention by way of example the preferred modification or alternative.

The abstract should not refer to purported merits or speculative applications of the invention and should not compare the invention with the prior art.

Where applicable, the abstract should include the following:

(1) if a machine or apparatus, its organization and operation;

(2) if an article, its method of making;

(3) if a chemical compound, its identity and use;

(4) if a mixture, its ingredients;

(5) if a process, the steps.

Extensive mechanical and design details of apparatus should not be given.

Applicant is reminded of the proper language and format for an abstract of the disclosure.

The abstract should be in narrative form and generally limited to a single paragraph on a separate sheet within the range of 50 to 150 words. It is important that the abstract not exceed 150 words in length since the space provided for the abstract on the computer tape used by the printer is limited. The form and legal phraseology often used in patent claims, such as "means" and "said," should be avoided. The abstract should describe the disclosure sufficiently to assist readers in deciding whether there is a need for consulting the full patent text for details.

The language should be clear and concise and should not repeat information given in the title. It should avoid using phrases which can be implied, such as, "The disclosure concerns," "The disclosure defined by this invention," "The disclosure describes," etc.

The following guidelines illustrate the preferred layout for the specification of a utility application. These guidelines are suggested for the applicant's use.

Arrangement of the Specification

3. As provided in 37 CFR 1.77(b), the specification of a utility application should include the following sections in order. Each of the lettered items should appear in upper case, without underlining or bold type, as a section heading. If no text follows the section heading, the phrase "Not Applicable" should follow the section heading:

(a) TITLE OF THE INVENTION.

(b) CROSS-REFERENCE TO RELATED APPLICATIONS.

(c) STATEMENT REGARDING FEDERALLY SPONSORED RESEARCH OR DEVELOPMENT.

(d) THE NAMES OF THE PARTIES TO A JOINT RESEARCH AGREEMENT

(e) INCORPORATION-BY-REFERENCE OF MATERIAL SUBMITTED ON A COMPACT DISC (See 37 CFR 1.52(e)(5) and MPEP 608.05. Computer program listings (37 CFR 1.96(c)), "Sequence Listings" (37 CFR 1.821(c)), and tables having more than 50 pages of text are permitted to be submitted on compact discs.) or

REFERENCE TO A "MICROFICHE APPENDIX" (See MPEP § 608.05(a). "Microfiche Appendices" were accepted by the Office until March 1, 2001.)

(f) BACKGROUND OF THE INVENTION.

(1) Field of the Invention.

(2) Description of Related Art including information disclosed under 37 CFR 1.97 and 1.98.

(g) BRIEF SUMMARY OF THE INVENTION.

(h) BRIEF DESCRIPTION OF THE SEVERAL VIEWS OF THE DRAWING(S).

(i) DETAILED DESCRIPTION OF THE INVENTION.

(j) CLAIM OR CLAIMS (commencing on a separate sheet).

(k) ABSTRACT OF THE DISCLOSURE (commencing on a separate sheet).

(l) SEQUENCE LISTING (See MPEP § 2424 and 37 CFR 1.821-1.825. A "Sequence Listing" is required on paper if the application discloses a nucleotide or amino acid sequence as defined in 37 CFR 1.821(a) and if the required "Sequence Listing" is not submitted as an electronic document on compact disc).

Content of Specification

a. Title of the Invention: See 37 CFR 1.72(a) and MPEP § 606. The title of the invention should be placed at the top of the first page of the specification unless the title is provided in an application data sheet. The title of the invention should be brief but technically accurate and descriptive, preferably from two to seven words may not contain more than 500 characters.

(b) Cross-References to Related Applications: See 37 CFR 1.78 and MPEP § 201.11.

(c) Statement Regarding Federally Sponsored Research and Development: See MPEP § 310.

(d) The Names Of The Parties To A Joint Research Agreement: See 37 CFR 1.71(g).

(e) Incorporation-By-Reference Of Material Submitted On a Compact Disc: The specification is required to include an incorporation-by-reference of electronic documents that are to become part of the permanent United States Patent and Trademark Office records in the file of a patent application. See 37 CFR 1.52(e) and MPEP § 608.05. Computer program listings (37 CFR 1.96(c)), "Sequence Listings" (37 CFR 1.821(c)), and tables having more than 50 pages of text were permitted as electronic documents on compact discs beginning on September 8, 2000.
Or alternatively, Reference to a "Microfiche Appendix": See MPEP § 608.05(a). "Microfiche Appendices" were accepted by the Office until March 1, 2001.

(f) Background of the Invention: See MPEP § 608.01(c). The specification should set forth the Background of the Invention in two parts:

(1) Field of the Invention: A statement of the field of art to which the invention pertains. This statement may include a paraphrasing of the applicable U.S. patent classification definitions of the subject matter of the claimed invention. This item may also be titled "Technical Field."

(2) Description of the Related Art including information disclosed under 37 CFR 1.97 and 37 CFR 1.98: A description of the related art known to the applicant and including, if applicable, references to specific related art and problems involved in the prior art which are

solved by the applicant's invention. This item may also be titled "Background Art."

(g) Brief Summary of the Invention: See MPEP § 608.01(d). A brief summary or general statement of the invention as set forth in 37 CFR 1.73. The summary is separate and distinct from the abstract and is directed toward the invention rather than the disclosure as a whole. The summary may point out the advantages of the invention or how it solves problems previously existent in the prior art (and preferably indicated in the Background of the Invention). In chemical cases it should point out in general terms the utility of the invention. If possible, the nature and gist of the invention or the inventive concept should be set forth. Objects of the invention should be treated briefly and only to the extent that they contribute to an understanding of the invention.

(h) Brief Description of the Several Views of the Drawing(s): See MPEP § 608.01(f). A reference to and brief description of the drawing(s) as set forth in 37 CFR 1.74.

(i) Detailed Description of the Invention: See MPEP § 608.01(g). A description of the preferred embodiment(s) of the invention as required in 37 CFR 1.71. The description should be as short and specific as is necessary to describe the invention adequately and accurately. Where elements or groups of elements, compounds, and processes, which are conventional and generally widely known in the field of the invention

described and their exact nature or type is not necessary for an understanding and use of the invention by a person skilled in the art, they should not be described in detail. However, where particularly complicated subject matter is involved or where the elements, compounds, or processes may not be commonly or widely known in the field, the specification should refer to another patent or readily available publication which adequately describes the subject matter.

(j) Claim or Claims: See 37 CFR 1.75 and MPEP § 608.01(m). The claim or claims must commence on separate sheet or electronic page (37 CFR 1.52(b)(3)). Where a claim sets forth a plurality of elements or steps, each element or step of the claim should be separated by a line indentation. There may be plural indentations to further segregate subcombinations or related steps. See 37 CFR 1.75 and MPEP § 608.01(i)-(p).

(k) Abstract of the Disclosure: See MPEP § 608.01(f). A brief narrative of the disclosure as a whole in a single paragraph of 150 words or less commencing on a separate sheet following the claims. In an international application which has entered the national stage (37 CFR 1.491(b)), the applicant need not submit an abstract commencing on a separate sheet if an abstract was published with the international application under PCT Article 21. The abstract that appears on the cover page of the pamphlet published by the International Bureau (IB) of the World Intellectual

Property Organization (WIPO) is the abstract that will be used by the USPTO. See MPEP § 1893.03(e).

(l) Sequence Listing, See 37 CFR 1.821-1.825 and MPEP §§ 2421-2431. The requirement for a sequence listing applies to all sequences disclosed in a given application, whether the sequences are claimed or not. See MPEP § 2421.02.

4. An examination of this application reveals that applicant is unfamiliar with patent prosecution procedure. While an inventor may prosecute the application, lack of skill in this field usually acts as a liability in affording the maximum protection for the invention disclosed. Applicant is advised to secure the services of a registered patent attorney or agent to prosecute the application, since the value of a patent is largely dependent upon skilled preparation and prosecution. The Office cannot aid in selecting an attorney or agent.

A listing of registered patent attorneys and agents is available on the USPTO Internet web site http://www.uspto.gov in the Site Index under "Attorney and Agent Roster." Applicants may also obtain a list of registered patent attorneys and agents located in their area by writing to the Mail Stop OED, Director of the U. S. Patent and Trademark Office, PO Box 1450, Alexandria, VA 22313-1450

Claim Rejections - 35 USC § 112

5. The following is a quotation of the second paragraph of 35 U.S.C. 112:

> The specification shall conclude with one or more claims particularly pointing out and distinctly claiming the subject matter which the applicant regards as his invention.

Claim 1 is rejected under 35 U.S.C. 112, second paragraph, as being indefinite for failing to particularly point out and distinctly claim the subject matter which applicant regards as the invention.

The claim is narrative in form and replete with indefinite and functional or operational language. The structure which goes to make up the device must be clearly and positively specified. The structure must be organized and correlated in such a manner as to present a complete operative device. The claim(s) must be in one sentence form only. Note the format of the claims in the patent(s) cited.

Claim 1 also recites the limitations "the right inside wall" in line 4; "the right and left side corners" in line7; "the top back wall" in lines 7-8; "the front" in line 9; "the back wall" in line 13. There is insufficient antecedent basis for these limitations in the claim. All limitations of a claim must be properly introduced for clarity between different limitations. See MPEP 2173.05(e).

Claim Rejections - 35 USC § 103

6. The following is a quotation of 35 U.S.C. 103(a) which forms the basis for all obviousness rejections set forth in this Office action:

> (a) A patent may not be obtained though the invention is not identically disclosed or described as set forth in section 102 of this title, if the differences between the subject matter sought to be patented and the prior art are such that the subject matter as a whole would have been obvious at the time the invention was made to a person having ordinary skill in the art to which said subject matter pertains. Patentability shall not be negatived by the manner in which the invention was made.

The factual inquiries set forth in *Graham* v. *John Deere Co.*, 383 U.S. 1, 148 USPQ 459 (1966), that are applied for establishing a background for determining obviousness under 35 U.S.C. 103(a) are summarized as follows:

1. Determining the scope and contents of the prior art.

2. Ascertaining the differences between the prior art and the claims at issue.
3. Resolving the level of ordinary skill in the pertinent art.
4. Considering objective evidence present in the application indicating obviousness or nonobviousness.

Claim 1 is rejected under 35 U.S.C. 103(a) as being unpatentable over Kliot (US Pat No 5,509,589) in view of Stobbs, II et al., (US Pat No 6,561,329) and Speck (US Pat No 5,588,529).

With respect to claim 1, Kliot discloses a fabric pouch (Kliot Fig 1 reference number 10; see also column 4, lines 15-17) that allows for storage and safe keeping of a helmet (column 1, lines 66-67 and continued on column 2, line 1), and capable of storing a baseball/softball mitt and can be closed by a drawstring (Fig 6, reference number 58). Kliot also discloses a right inside wall (Fig 3 reference number 16 on the right side of reference number 26) with a second smaller pouch (Fig 3 reference number 12 on the right side), a back wall with left and right top corners (Fig 2 reference number 24 and Fig 4 generally) and a flap (Fig 6 reference number 38) folding forward over the front and is attached from the top back wall to provide privacy of contents and a method to keep the contents of the pouch clean. Kliot does not disclose two clasps attached by straps located on the right and left side corners of the top back wall, that the flap displays names or logos, a pouch located on the back wall or a carrying strap to connect both clasps making it convenient to carry. However, Stobbs discloses an athletic equipment bag with two clasps (Fig 3 reference number 70) attached by straps (column 3, lines 63-67 and column 4, lines 1-2) located on the right and left side corners of the top back wall, a pouch (Fig 6 reference number 28) located on the back wall and a carrying strap with clips (Fig 2 reference number 36) capable of connecting both

clasps making the bag convenient to carry. Speck discloses a baseball equipment bag showing that names or logos can be displayed anywhere on the bag/pouch (Speck Fig 7). Therefore, it would have been obvious to one of ordinary skill in the art at the time of invention to modify the Kliot backpack to include two clasps attached by straps located on the right and left side corners of the top back wall to allow the bag to hang on a fence (Stobbs column 4, lines 1-2), a pouch located on the back wall for additional storage of equipment or gear (Stobbs column 3, lines 52-55), a carrying strap to connect both clasps making it convenient to carry and a name or logo on the flap for identification of the owner of the bag.

With respect to Applicant's reference to dimensions and size of the pouch and it's associated component parts, it would have been an obvious matter of design choice to one of ordinary skill in the art at the time the invention was made to specify dimensions for the size of the pouch and its various parts for a particular use, since such a modification would have involved a mere change in the size of a component. A change in size is generally recognized as being within the level of ordinary skill in the art. *In re Rose, 105 USPQ 237 (CCPA 1955).*

Conclusion

7. The prior art made of record and not relied upon is considered pertinent to applicant's disclosure. Comeau (US Pat No 4,693,402) discloses a sports pack with a drawstring closure. Fowler (US Pat No 5,975,293) discloses a sports bag for storing a baseball helmet and other baseball equipment.

Any inquiry concerning this communication or earlier communications from the examiner should be directed to Steven B. Pollicoff whose telephone number is (571)272-7818. The examiner can normally be reached on M-F: 7:30A.M.-4:00P.M.

If attempts to reach the examiner by telephone are unsuccessful, the examiner's supervisor, Mickey Yu can be reached on (571)272-4562. The fax phone number for the organization where this application or proceeding is assigned is 571-273-8300.

Information regarding the status of an application may be obtained from the Patent Application Information Retrieval (PAIR) system. Status information for published applications may be obtained from either Private PAIR or Public PAIR. Status information for unpublished applications is available through Private PAIR only. For more information about the PAIR system, see http://pair-direct.uspto.gov. Should you have questions on access to the Private PAIR system, contact the Electronic Business Center (EBC) at 866-217-9197 (toll-free).

SBP 3/16/06
SBP

JILA M. MOHANDESI
PRIMARY EXAMINER

PTO/SB/64 (04-07)
Approved for use through 09/30/2007. OMB 0651-0031
U.S. Patent and Trademark Office; U.S. DEPARTMENT OF COMMERCE
Under the Paperwork Reduction Act of 1995, no persons are required to respond to a collection of information unless it displays a valid OMB control number.

PETITION FOR REVIVAL OF AN APPLICATION FOR PATENT ABANDONED UNINTENTIONALLY UNDER 37 CFR 1.137(b)

Docket Number (Optional)

First named inventor:

Application No.: Art Unit:

Filed: Examiner:

Title:

Attention: Office of Petitions
Mail Stop Petition
Commissioner for Patents
P.O. Box 1450
Alexandria, VA 22313-1450
FAX (571) 273-8300

NOTE: If information or assistance is needed in completing this form, please contact Petitions Information at (571) 272-3282.

The above-identified application became abandoned for failure to file a timely and proper reply to a notice or action by the United States Patent and Trademark Office. The date of abandonment is the day after the expiration date of the period set for reply in the office notice or action plus an extensions of time actually obtained.

APPLICANT HEREBY PETITIONS FOR REVIVAL OF THIS APPLICATION

NOTE: A grantable petition requires the following items:
(1) Petition fee;
(2) Reply and/or issue fee;
(3) Terminal disclaimer with disclaimer fee - required for all utility and plant applications filed before June 8, 1995; and for all design applications; and
(4) Statement that the entire delay was unintentional.

1.Petition fee

☐ Small entity-fee $ _____ (37 CFR 1.17(m)). Applicant claims small entity status. See 37 CFR 1.27.

☐ Other than small entity – fee $ _____ (37 CFR 1.17(m))

2. Reply and/or fee

A. The reply and/or fee to the above-noted Office action in the form of _____(identify type of reply):

☐ has been filed previously on _____.
☐ is enclosed herewith.

B. The issue fee and publication fee (if applicable) of $ _____.

☐ has been paid previously on _____.
☐ is enclosed herewith.

This collection of information is required by 37 CFR 1.137(b). The information is required to obtain or retain a benefit by the public which is to file (and by the USPTO to process) an application. Confidentiality is governed by 35 U.S.C. 122 and 37 CFR 1.11 and 1.14. This collection is estimated to take 1.0 hour to complete, including gathering, preparing, and submitting the completed application form to the USPTO. Time will vary depending upon the individual case. Any comments on the amount of time you require to complete this form and/or suggestions for reducing this burden, should be sent to the Chief Information Officer, U.S. Patent and Trademark Office, U.S. Department of Commerce, P.O. Box 1450, Alexandria, VA 22313-1450. DO NOT SEND FEES OR COMPLETED FORMS TO THIS ADDRESS. **SEND TO: Mail Stop Petition, Commissioner for Patents, P.O. Box 1450, Alexandria, VA 22313-1450.**

If you need assistance in completing the form, call 1-800-PTO-9199 and select option 2.

3. Terminal disclaimer with disclaimer fee

☐ Since this utility/plant application was filed on or after June 8, 1995, no terminal disclaimer is required.

☐ A terminal disclaimer (and disclaimer fee (37 CFR 1.20(d)) of $ _____ for a small entity or $ _____ for other than a small entity) disclaiming the required period of time is enclosed herewith (see PTO/SB/63).

4. STATEMENT: The entire delay in filing the required reply from the due date for the required reply until the filing of a grantable petition under 37 CFR 1.137(b) was unintentional. [NOTE: The United States Patent and Trademark Office may require additional information if there is a question as to whether either the abandonment or the delay in filing a petition under 37 CFR 1.137(b) was unintentional (MPEP 711.03(c), subsections (III)(C) and (D)).]

WARNING:

Petitioner/applicant is cautioned to avoid submitting personal information in documents filed in a patent application that may contribute to identity theft. Personal information such as social security numbers, bank account numbers, or credit card numbers (other than a check or credit card authorization form PTO-2038 submitted for payment purposes) is never required by the USPTO to support a petition or an application. If this type of personal information is included in documents submitted to the USPTO, petitioners/applicants should consider redacting such personal information from the documents before submitting them to the USPTO. Petitioner/applicant is advised that the record of a patent application is available to the public after publication of the application (unless a non-publication request in compliance with 37 CFR 1.213(a) is made in the application) or issuance of a patent. Furthermore, the record from an abandoned application may also be available to the public if the application is referenced in a published application or an issued patent (see 37 CFR 1.14). Checks and credit card authorization forms PTO-2038 submitted for payment purposes are not retained in the application file and therefore are not publicly available.

_____	_____
Signature	Date
_____	_____
Typed or printed name	Registration Number, if applicable
_____	_____
Address	Telephone Number
_____	
Address	

Enclosures:
☐ Fee Payment
☐ Reply
☐ Terminal Disclaimer Form
☐ Additional sheets containing statements establishing unintentional delay
☐ Other: _____

CERTIFICATE OF MAILING OR TRANSMISSION [37 CFR 1.8(a)]

I hereby certify that this correspondence is being:

☐ Deposited with the United States Postal Service on the date shown below with sufficient postage as first class mail in an envelope addressed to: Mail Stop Petition, Commissioner for Patents, P. O. Box 1450, Alexandria, VA 22313-1450.

☐ Transmitted by facsimile on the date shown below to the United States Patent and Trademark Office at (571) 273-8300.

_____	_____
Date	Signature
	_____
	Typed or printed name of person signing certificate

Privacy Act Statement

The **Privacy Act of 1974 (P.L. 93-579)** requires that you be given certain information in connection with your submission of the attached form related to a patent application or patent. Accordingly, pursuant to the requirements of the Act, please be advised that: (1) the general authority for the collection of this information is 35 U.S.C. 2(b)(2); (2) furnishing of the information solicited is voluntary; and (3) the principal purpose for which the information is used by the U.S. Patent and Trademark Office is to process and/or examine your submission related to a patent application or patent. If you do not furnish the requested information, the U.S. Patent and Trademark Office may not be able to process and/or examine your submission, which may result in termination of proceedings or abandonment of the application or expiration of the patent.

The information provided by you in this form will be subject to the following routine uses:

1. The information on this form will be treated confidentially to the extent allowed under the Freedom of Information Act (5 U.S.C. 552) and the Privacy Act (5 U.S.C 552a). Records from this system of records may be disclosed to the Department of Justice to determine whether disclosure of these records is required by the Freedom of Information Act.
2. A record from this system of records may be disclosed, as a routine use, in the course of presenting evidence to a court, magistrate, or administrative tribunal, including disclosures to opposing counsel in the course of settlement negotiations.
3. A record in this system of records may be disclosed, as a routine use, to a Member of Congress submitting a request involving an individual, to whom the record pertains, when the individual has requested assistance from the Member with respect to the subject matter of the record.
4. A record in this system of records may be disclosed, as a routine use, to a contractor of the Agency having need for the information in order to perform a contract. Recipients of information shall be required to comply with the requirements of the Privacy Act of 1974, as amended, pursuant to 5 U.S.C. 552a(m).
5. A record related to an International Application filed under the Patent Cooperation Treaty in this system of records may be disclosed, as a routine use, to the International Bureau of the World Intellectual Property Organization, pursuant to the Patent Cooperation Treaty.
6. A record in this system of records may be disclosed, as a routine use, to another federal agency for purposes of National Security review (35 U.S.C. 181) and for review pursuant to the Atomic Energy Act (42 U.S.C. 218(c)).
7. A record from this system of records may be disclosed, as a routine use, to the Administrator, General Services, or his/her designee, during an inspection of records conducted by GSA as part of that agency's responsibility to recommend improvements in records management practices and programs, under authority of 44 U.S.C. 2904 and 2906. Such disclosure shall be made in accordance with the GSA regulations governing inspection of records for this purpose, and any other relevant (*i.e.*, GSA or Commerce) directive. Such disclosure shall not be used to make determinations about individuals.
8. A record from this system of records may be disclosed, as a routine use, to the public after either publication of the application pursuant to 35 U.S.C. 122(b) or issuance of a patent pursuant to 35 U.S.C. 151. Further, a record may be disclosed, subject to the limitations of 37 CFR 1.14, as a routine use, to the public if the record was filed in an application which became abandoned or in which the proceedings were terminated and which application is referenced by either a published application, an application open to public inspection or an issued patent.
9. A record from this system of records may be disclosed, as a routine use, to a Federal, State, or local law enforcement agency, if the USPTO becomes aware of a violation or potential violation of law or regulation.

UNITED STATES PATENT AND TRADEMARK OFFICE

UNITED STATES DEPARTMENT OF COMMERCE
United States Patent and Trademark Office
Address: COMMISSIONER FOR PATENTS
P.O. Box 1450
Alexandria, Virginia 22313-1450
www.uspto.gov

Snell & Wilmer L.L.P. (AMEX)
ONE ARIZONA CENTER
400 E. VAN BUREN STREET
PHOENIX, AZ 85004-2202

Mail Date: 04/23/2010

Applicant	: Lee J. Peart	: DECISION ON REQUEST FOR
Patent Number	: 7587756	: RECALCULATION of PATENT
Issue Date	: 09/08/2009	: TERM ADJUSTMENT IN VIEW
Application No	: 10/710,611	: OF WYETH
Filed	: 07/23/2004	:
		:

The Patentee's Request for Recalculation is **DISMISSED.**

This Request is deemed ineligible for consideration for one or more of the following reasons:

(A). The patent for which PTA recalculation is requested is either a design or reissue application or is a reexamination proceeding;

(B). The patent for which PTA recalculation is requested resulted from a utility or plant application filed under 35 USC 111(a) before May 29, 2000 and no CPA filed in the application on/after May 29, 2000;

(C). The patent for which PTA recalculation is requested resulted from an international application in which the international filing date was before May 29, 2000 and no CPA filed in the application on/after May 29, 2000;

(D). The patent for which PTA recalculation is requested issued on/after March 2, 2010;

(E). The Request for Recalculation was filed more than 180 days after the grant date of the patent and the request was not filed within two months of a dismissal of a request for reconsideration of the of the patent term under 37 CFR 1.705(d);

(F). The Request for Recalculation is not solely limited to USPTO pre-Wyeth interpretation of 35 U.S.C. 154(b)(2)(A);

or

(G). A civil action was filed pursuant to 35 U.S.C. 154(b)(4)(A)concerning the same patent at issue in this request.

Patentee may file a reply to this decision dismissing the Request for Recalculation. Patentee must file such reply within one month or thirty days, whichever is longer, of the mail date of the decision dismissing the Request for Recalculation. No fee is required if patentee is asserting in the reply that the dismissal for ineligibility is improper.

Patentee should use document code PET.OP if electronically filing a reply to this dismissal. If the USPTO finds that the request was improperly deemed ineligible, the USPTO will mail applicant a recalculation determination.

Patentee should be aware that in order to preserve the right to review in the United States District Court for the District of Columbia of the USPTO patent term adjustment determination, patentee must ensure that he or she also take the steps required under 35 U.S.C. 154(b)(4)(A). Nothing in the request for recalculation should be construed as providing an alternative time frame for commencing a civil action under 35 U.S.C. 154 (b)(4)(A).

Any questions concerning this decision should be directed to the Office of Patent Legal Administration at 571-272-7702.

UNITED STATES PATENT AND TRADEMARK OFFICE

Commissioner for Patents
United States Patent and Trademark Office
P.O. Box 1450
Alexandria, VA 22313-1450
www.uspto.gov

NOVAK DRUCE & QUIGG, LLP
1300 EYE STREET NW
400 EAST TOWER
WASHINGTON, DC 20005

COPY MAILED

JAN 19 2006

OFFICE OF PETITIONS

In re Application of

Sabelstrom, et al. :

Application No. 10/710,619

: DECISION ON PETITION

Filed: July 26, 2004

:

Attorney Docket No. 7589.186.PCUS00

This is a decision on the petition under 37 CFR 1.137(b), filed December 12, 2005, to revive the above-identified application.

The petition is **GRANTED**.

The above-cited application became abandoned for failure to reply in a timely manner to the non-final Office action mailed March 1, 2005, which set a shortened statutory period for reply of three (3) months from its mailing date. No extension of time pursuant to 37 CFR 1.136(a) was obtained within the allowable period. Accordingly, the application became abandoned on June 2, 2005. A Notice of Abandonment was mailed on October 21, 2005.

The amendment filed December 12, 2005, is noted.

The application is being forwarded to Technology Center 3600, GAU 3683 for further processing.

Telephone inquiries concerning this decision should be directed to the undersigned at (571) 272-3222.

Kenya A. McLaughlin
Petitions Attorney
Office of Petitions

UNITED STATES PATENT AND TRADEMARK OFFICE

Commissioner for Patents
United States Patent and Trademark Office
P.O. Box 1450
Alexandria, VA 22313-1450
www.uspto.gov

NOVAK DRUCE & QUIGG, LLP
1300 EYE STREET NW
400 EAST TOWER
WASHINGTON, DC 20005

COPY MAILED

JAN 0 4 2006

OFFICE OF PETITIONS

In re Application of :

Sabelstrom, et al. :

Application No. 10/710,619 : DECISION ON PETITION

Filed: July 26, 2004 :

Attorney Docket No. 7589.186.PCUS00

This is a decision on the petition under 37 CFR 1.137(b), filed December 12, 2005, to revive the above-identified application.

The petition is **GRANTED**.

The above-cited application became abandoned for failure to reply in a timely manner to the non-final Office action mailed March 1, 2005, which set a shortened statutory period for reply of three (3) months. No extension of time pursuant to 37 CFR 1.136(a) was obtained. Accordingly, the application became abandoned on June 2, 2005. A Notice of Abandonment was mailed on October 21, 2005.

The amendment filed December 12, 2005, is noted and made of record.

The application is being forwarded to Technology Center 3600, GAU 3683 for further processing.

Telephone inquiries concerning this decision should be directed to the undersigned at (571) 272-3222.

Kenya A. McLaughlin

Kenya A. McLaughlin
Petitions Attorney
Office of Petitions

Copied from 10410619 on 01/25/2006

UNITED STATES PATENT AND TRADEMARK OFFICE

Commissioner for Patents
United States Patent and Trademark Office
P.O. Box 1450
Alexandria, VA 22313-1450
www.uspto.gov

NOVAK DRUCE & QUIGG, LLP
1300 EYE STREET NW
SUITE 1000 WEST TOWER
WASHINGTON, DC 20005

COPY MAILED

SEP 17 2007

OFFICE OF PETITIONS

In re Application of

Sabelstrom, et al.

Application No. 10/710,619

Filed: July 26, 2004

Attorney Docket No. 7589.186.PCUS00

DECISION ON PETITION

This is a decision on the petition under 37 CFR 1.137(b), filed September 5, 2007, to revive the above-identified application.

The petition is **GRANTED**.

The above-cited application became abandoned for failure to timely file an appeal brief after the filing of the Notice of Appeal on November 13, 2006. The application became abandoned on January 14, 2007. A Notice of Abandonment was mailed on July 11, 2007.

The Request for Continued Examination, filed September 5, 2007, is noted.

The address cited on the petition differs from the address of record. Although a courtesy copy of this decision is being mailed to the address cited on the petition, all future correspondence will be mailed solely to address of record until appropriate written instructions to the contrary are received.

The application is being forwarded to Technology Center 3600, GAU 3683 for further processing.

Telephone inquiries concerning this decision should be directed to the undersigned at (571) 272-3222.

Kenya A. McLaughlin
Petitions Attorney
Office of Petitions

cc: Tracy W. Druce
1000 Louisana, 53rd Floor
Houston, TX 77002

UNITED STATES PATENT AND TRADEMARK OFFICE

Commissioner for Patents
United States Patent and Trademark Office
P.O. Box 1450
Alexandria, VA 22313-1450
www.uspto.gov

MAILED
FROM DIRECTOR'S OFFICE

OCT 04 2006

TECHNOLOGY CENTER 3600

BROOKS KUSHMAN P.C./FGTL
1000 TOWN CENTER
22ND FLOOR
SOUTHFIELD MI 48075-1238

In re application of : **DECISION ON PETITION**
Joe Retzbach, et al : **TO MAKE SPECIAL**
Application No. 10/710,626 : **(ACCELERATED**
Filed: July 26, 2004 : **EXAMINATION)**
For: VEHICLE SALES AND SERVICE DATA INTEGRATION SYSTEM AND METHOD

This is in response to the petition filed on August 29, 2006 to make the above-identified application special on the basis of special examining procedure for certain new applications - accelerated examination as set forth in MPEP § 708.02 VIII.

The requirements for granting special status under this section are: (A) a petition to make special accompanied by the fee set forth in 37 CFR 1.17(i); (B) all claims being directed to a single invention, or an election without traverse if the Office determines that all the claims are not directed to a single invention; (C) a statement that a pre-examination search was made listing the field of search; (D) one copy of each of the references deemed most closely related to the subject matter encompassed by the claims if said references are not already of record; and (E) a detailed discussion of how the claimed subject matter is patentable over the references in accordance with 37 CFR 1.111 (b) and (c).

Since all of the requirements for special status under MPEP § 708.02 VIII have been met, the petition is **GRANTED**.

The examiner is directed (1) to make an interference search for possible interfering applications, (2) to promptly examine this application out of turn, and (3) if any interfering application is discovered, to examine such application simultaneously and state in the first official letter of such application that it is being taken out of turn because of a possible interference.

Petitioner is advised that this application will continue to be special, throughout its entire prosecution and pendency, including interference or appeal, if any, only if petitioner makes a prompt ***bona fide*** effort, in response to each Office action, to place the application in condition for allowance, even if it is necessary to conduct an interview with the examiner to accomplish this purpose.

SUMMARY: Petition to Make Special **GRANTED.**

Kenneth J. Domer
Special Programs Examiner
Technology Center 3600
(571) 272-6587

KJD/dcg: 9/22/06

UNITED STATES PATENT AND TRADEMARK OFFICE

Commissioner for Patents
United States Patent and Trademark Office
P.O. Box 1450
Alexandria, VA 22313-1450
www.uspto.gov

HAMILTON, BROOK, SMITH & REYNOLDS, P.C.
530 VIRGINIA ROAD
P.O. BOX 9133
CONCORD MA 01742-9133

COPY MAILED

NOV 15 2005

OFFICE OF PETITIONS

In re Application of	:	
Stephen TITUS	:	
Application No. 10/710,630	:	ON PETITION
Filed: July 26, 2004	:	
Attorney Docket No.	:	

This is a decision on the petition under 37 CFR 1.137(b), filed August 1, 2005, to revive the above-identified application.

The petition is **DISMISSED**.

Any request for reconsideration of this decision must be submitted within TWO (2) MONTHS from the mail date of this decision. Extensions of time under 37 CFR 1.136(a) are permitted. The reconsideration request should include a cover letter entitled "Renewed Petition under 37 CFR 1.137(b)." This is **not** a final agency action within the meaning of 5 U.S.C. § 704.

The above-identified application became abandoned for failure to file a proper reply in a timely manner to the Notice to File Missing Parts of Nonprovisional Application mailed October 18, 2004, which set a period for reply of two (2) months. No extensions of time under the provisions of 37 CFR 1.136(a) were obtained. Accordingly, the above-identified application became abandoned on December 19, 2004.

A grantable petition under 37 CFR 1.137(b) must be accompanied by: (1) the required reply, unless previously filed; (2) the petition fee as set forth in 37 CFR 1.17(m); (3) a statement that the entire delay in filing the required reply from the due date for the reply until the filing of a grantable petition pursuant to 37 CFR 1.137(b) was unintentional; and (4) any terminal disclaimer (and fee as set forth in 37 CFR 1.20(d)) required by 37 CFR 1.137(d). Where there is a question as to whether either the abandonment or the delay in filing a petition under 37 CFR 1.137 was unintentional, the Commissioner may require additional information. See MPEP 711.03(c)(III)(C) and (D). The instant petition lacks item(s) (1). Petitioner has submitted the statutory basic filing fee of $790 and the late filing fee or oath or declaration surcharge of $130 set forth in 37 CFR 1.16(e); however, petitioner has failed to submit a signed oath or declaration.

Further correspondence with respect to this matter should be addressed as follows:

By Mail:
Mail Stop PETITION
Commissioner for Patents
P. O. Box 1450
Alexandria, VA 22313-1450

By hand:
U. S. Patent and Trademark Office
Customer Service Window, Mail Stop Petitions
Randolph Building
401 Dulany Street
Alexandria, VA 22314

The centralized facsimile number is **(571) 273-8300.**

Telephone inquiries concerning this decision should be directed to David A. Bucci at (571) 272-7099 or in his absence to the undersigned at (571) 272-3217.

/Brian Hearn/

Brian Hearn
Petitions Examiner
Office of Petitions

UNITED STATES PATENT AND TRADEMARK OFFICE

Commissioner for Patents
United States Patent and Trademark Office
P.O. Box 1450
Alexandria, VA 22313-1450
www.uspto.gov

HAMILTON, BROOK, SMITH & REYNOLDS, P.C.
530 VIRGINIA ROAD
P.O. BOX 9133
CONCORD MA 01742-9133

COPY MAILED

DEC 0 6 2005

OFFICE OF PETITIONS

In re Application of :
Stephen TITUS :
Application No. 10/710,630 : ON PETITION
Filed: July 26, 2004 :
Attorney Docket No. :

This is a decision on the renewed petition under 37 CFR 1.137(b), filed November 25, 2005, to revive the above-identified application.

The petition is **GRANTED**.

The above-identified application became abandoned for failure to file a proper reply in a timely manner to the Notice to File Missing Parts of Nonprovisional Application mailed October 18, 2004, which set a period for reply of two (2) months. No extensions of time under the provisions of 37 CFR 1.136(a) were obtained. Accordingly, the above-identified application became abandoned on December 19, 2004.

The petition satisfies the conditions for revival pursuant to the provisions of 37 CFR 1.137(b) in that (1) the reply in the form of the required fees and oath or declaration; (2) the petition fee of $1500; and (3) the required statement of unintentional delay have been received. Accordingly, the reply to the Notice to File Missing Parts of Nonprovisional Application of October 18, 2004 is accepted as having been unintentionally delayed.

Telephone inquiries concerning this decision should be directed to the undersigned at (571) 272-7099.

The application is being referred to the Office of Initial Patent Examination.

David Bucci
Petitions Examiner
Office of Petitions

UNITED STATES PATENT AND TRADEMARK OFFICE

Commissioner for Patents
United States Patent and Trademark Office
P.O. Box 1450
Alexandria, VA 22313-1450
www.uspto.gov

OSTRAGER CHONG FLAHERTY & BROITMAN, P.C.
570 LEXINGTON AVENUE
FLOOR 17
NEW YORK NY 10022-6894

COPY MAILED

NOV 16 2007

OFFICE OF PETITIONS

In re Application of :
Pradip K. Saha et al :
Application No. 10/710,645 : DECISION GRANTING PETITION
Filed: July 27, 2004 : UNDER 37 CFR 1.313(c)(2)
Attorney Docket No. 01-1163A :

This is a decision on the petition under 37 CFR 1.313(c)(2), filed November 15, 2007, to withdraw the above-identified application from issue after payment of the issue fee.

The petition is **GRANTED**.

The above-identified application is withdrawn from issue for consideration of a submission under 37 CFR 1.114 (request for continued examination). *See* 37 CFR 1.313(c)(2).

Petitioner is advised that the issue fee paid on October 12, 2007 cannot be refunded. If, however, this application is again allowed, petitioner may request that it be applied towards the issue fee required by the new Notice of Allowance.[1]

Telephone inquiries should be directed to the undersigned at (571) 272-3208.

This application is being referred to Technology Center AU 3754 for processing of the request for continued examination under 37 CFR 1.114 and for consideration of the concurrently filed IDS.

Karen Creasy

Karen Creasy
Petitions Examiner
Office of Petitions

[1] *The request to apply the issue fee to the new Notice may be satisfied by completing and returning the new Part B – Fee(s) Transmittal Form (along with any balance due at the time of submission). Petitioner is advised that the Issue Fee Transmittal Form **must** be completed and timely submitted to avoid abandonment of the application.*

UNITED STATES PATENT AND TRADEMARK OFFICE

COMMISSIONER FOR PATENTS
UNITED STATES PATENT AND TRADEMARK OFFICE
P.O. BOX 1450
ALEXANDRIA, VA 22313-1450
www.uspto.gov

FOLEY & LARDNER LLP
150 EAST GILMAN STREET
P.O. BOX 1497
MADISON WI 53701-1497

MAILED

MAR 13 2009

OFFICE OF PETITIONS

In re Application :
Deeter, et al. :
Application No. 10/710,654 : PATENT TERM ADJUSTMENT
Filed: July 27, 2004 :
Dkt. No.: 018894-0113 ::

This decision is in response to the "REQUEST FOR RECONSIDERATION OF PATENT TERM ADJUSTMENT UNDER 37 C.F.R. §1.705," filed December 23, 2008. This matter is being properly treated as a timely filed application for patent term adjustment pursuant to 37 CFR 1.705(b).

The Determination of Patent Term Adjustment under 35 USC 154(b) was mailed September 29, 2008. Applicants argue that the application is entitled to an additional adjustment of 363 days pursuant to 35 USC 154(b)(1)(B).

Applicants contest the adjustment insofar as it relates to the Office's failure to issue the patent within three years of the filing date of the application pursuant to 37 CFR 1.703(b) in view of Wyeth v. Dudas, No. 07-1492 (D.D.C. September 30, 2008).

To the extent that this application for patent term adjustment requests reconsideration of the patent term adjustment as it relates to the Office's failure to issue the patent within 3 years of the filing date, a decision is being **held in abeyance** until after the actual patent date. Knowledge of the actual date the patent issues is ordinarily required to calculate the amount, if any, of additional patent term patentee is entitled to for Office failure to issue the patent within 3 years. See, 37 CFR 1.703(b). It is noted that at the time of this decision, the patent has not issued.

Applicants are given **TWO (2) MONTHS** from the issue date of the patent to file a written request for reconsideration of the patent term adjustment for Office failure to issue the patent within 3 years. A copy of this decision should accompany the request. Applicants may seek such consideration without payment of an additional fee. However, as to all other bases for seeking reconsideration of the patent term adjustment indicated in the patent, all requirements of § 1.705(d) must be met. Requests for reconsideration on other bases must be timely filed and must include payment of the required fee.

With respect to the over 3 year calculation, rather than file the request for reconsideration of Patent Term Adjustment at the time of the mailing of the notice of allowance, applicants are advised that they may wait until the time of the issuance of the patent and file a request for reconsideration of the patent term pursuant to 37 CFR 1.705(d). The USPTO notes that it does not calculate the amount of time earned pursuant to 37 CFR 1.702(b) until the time of the issuance of the patent and accordingly, the Office will consider any request for reconsideration of the patent term adjustment due to an error in the calculation of 37 CFR 1.702(b) to be timely if the request for reconsideration is filed within two months of the issuance of the patent.

Receipt is hereby acknowledged of the required patent term adjustment application fee of $200.00.

The application file is being forwarded to the Office of Data Management for issuance of the patent. The patent term adjustment indicated on the patent (as shown on the Issue Notification mailed about three weeks prior to patent issuance) will include any additional adjustment accrued both for Office delay in issuing the patent more than four months after payment of the issue fee and satisfaction of all outstanding requirements, and for the Office taking in excess of three years to issue the patent (to the extent that the three-year period does not overlap with periods already accorded).

Telephone inquiries specific to this matter should be directed to Petitions Attorney Alesia M. Brown at (571) 272-3205.

Kery Fries

Kery Fries
Senior Patent Attorney
Office of Patent Legal Administration
Office of Deputy Commissioner
for Patent Examination Policy

UNITED STATES PATENT AND TRADEMARK OFFICE

Commissioner for Patents
United States Patent and Trademark Office
P.O. Box 1450
Alexandria, VA 22313-1450
www.uspto.gov

MAILED

MAR 15 2010

OFFICE OF PETITIONS

FOLEY & LARDNER LLP
150 EAST GILMAN STREET
P.O. BOX 1497
MADISON WI 53701-1497

In re Patent No. 7,517,934
Issued: April 14, 2009
Application No. 10/710,654
Filed: July 27, 2004
Dkt. No.: 018894-0113

: DECISION ON APPLICATION FOR
: PATENT TERM ADJUSTMENT and
: NOTICE OF INTENT TO ISSUE
: CERTIFICATE OF CORRECTION
:

This is a decision on the petition filed on April 24, 2009, which is being treated as a petition under 37 CFR 1.705(d) requesting that the patent term adjustment indicated on the above-identified patent be corrected to indicate that the term of the above-identified patent is extended or adjusted by 92 days.

The petition to correct the patent term adjustment indicated on the above-identified patent is **GRANTED to the extent indicated herein**.

As the period from the filing date of the request for continued examination (RCE) to the issue date of the patent is not included in the "B" delay period, the over three year period begins on July 28, 2007 and ends on July 23, 2008, the day before the RCE was filed, and not July 24, 2008 the day of filing of the RCE as calculated by patentees. See, 35 U.S.C. 154(b)(1)(B)(i). Thus, the over 3 year period is 362 days not 363 days. As such, the correct patent term adjustment is 92, not 93 days.

The Office will *sua sponte* issue a certificate of correction. Pursuant to 37 CFR 1.322, the Office will not issue a certificate of correction without first providing assignee or patentee an opportunity to be heard. Accordingly, patentees are given **one (1) month or thirty (30) days**, whichever is longer, from the mail date of this decision to respond. No extensions of time will be granted under § 1.136. See, 37 CFR 1.323(a)(4).

The Office acknowledges receipt of the previous submission of the $200.00 fee set forth in 37 CFR 1.18(e). No additional fees are required.

The application is being forwarded to the Certificates of Corrections Branch for issuance of a certificate of correction. The Office will issue a certificate of correction indicating that the term of the above-identified patent is extended or adjusted by 92 days.

Telephone inquiries specific to this matter should be directed to the undersigned at (571) 272-3205.

/ALESIA M. BROWN/

Alesia M. Brown
Senior Petitions Attorney
Office of Petitions

Enclosure: Copy of DRAFT Certificate of Correction

UNITED STATES PATENT AND TRADEMARK OFFICE

CERTIFICATE OF CORRECTION

PATENT : 7,517,934

DATED : **April 14, 2009** **DRAFT**

INVENTOR(S) : Deeter et al.

It is certified that error appears in the above-identified patent and that said Letters Patent is hereby corrected as shown below:

On the cover page,

[*] Notice: Subject to any disclaimer, the term of this patent is extended or adjusted under 35 USC 154(b) by 64 days

Delete the phrase "by 64 days" and insert – by 92 days--

UNITED STATES PATENT AND TRADEMARK OFFICE

Commissioner for Patents
United States Patent and Trademark Office
P.O. Box 1450
Alexandria, VA 22313-1450
www.uspto.gov

NORTH AMERICA INTELLECTUAL PROPERTY CORPORATION
P.O. BOX 506
MERRIFIELD VA 22116

COPY MAILED

SEP 15 2008

In re Application of	:	
Linix CHENG	:	
Application No. 10/710,665	:	DECISION ON PETITION
Filed: July 28, 2004	:	
Attorney Docket No. **ACMP0144USA**	:	

This is a decision on the petition under the unintentional provisions of 37 CFR 1.137(b), filed June 13, 2008, to revive the above-identified application.

The petition is **GRANTED**.

This application became abandoned for failure to timely pay the issue and publication fees on or before April 24, 2008, as required by the Notice of Allowance and Fee(s) Due, mailed January 24, 2008. Accordingly, the date of abandonment of this application is April 25, 2008.

The petition satisfies the requirements of 37 CFR 1.137(b) in that petitioner has supplied (1) the reply in the form of payment of the issue fee of $1440 and the publication fee of $300, (2) the petition fee of $1540; and (3) a proper statement of unintentional delay. Accordingly, the Issue Fee payment is accepted as having been unintentionally delayed.

Telephone inquiries concerning this decision should be directed to Tredelle Jackson at (571) 272-2783.

This application is being referred to the Office of Data Management for processing into a patent.

Ramesh Krishnamurthy
Petitions Examiner
Office of Petitions

RAM Fee History Query

Revenue Accounting and Management

Name/Number: 10710665 Total Records Found: 7

Start Date: Any Date End Date: Any Date

Accounting Date	Sequence Num.	Fee Type	Fee Code	Fee Amount	Mailroom Date	Payment Method
06/13/2008	00000001	1	1453	$1,540.00	06/13/2008	DA 503105
06/13/2008	00000002	1	1501	$1,440.00	06/13/2008	DA 503105
06/13/2008	00000003	1	1504	$300.00	06/13/2008	DA 503105
06/06/2008	00007226	4	8021	$80.00	06/05/2008	CC
05/25/2007	00000005	1	1801	$790.00	05/24/2007	DA 503105
07/28/2004	00000034	3	1001	$770.00	07/28/2004	DA 503105
07/28/2004	00000035	3	8021	$40.00	07/28/2004	DA 503105

RECEIVED
CENTRAL FAX CENTER
JUN 13 2008

PTO/SB/64 (01-08)
Approved for use through 06/30/2008. OMB 0651-0031
U.S. Patent and Trademark Office; U.S. DEPARTMENT OF COMMERCE
Under the Paperwork Reduction Act of 1995, no persons are required to respond to a collection of information unless it displays a valid OMB control number.

PETITION FOR REVIVAL OF AN APPLICATION FOR PATENT ABANDONED UNINTENTIONALLY UNDER 37 CFR 1.137(b)	Docket Number (Optional) ACMP0144USA

First named Inventor: Linlx Cheng

Application No.: 10/710,665 Art Unit: 2629

Filed: 07/28/2004 Examiner: BECK, ALEXANDER S

Title: INTERFACE APPARATUS COMBINING DISPLAY PANEL AND SHAFT

Attention: Office of Petitions
Mail Stop Petition
Commissioner for Patents
P.O. Box 1450
Alexandria, VA 22313-1450
FAX (571) 273-8300

NOTE: If information or assistance is needed in completing this form, please contact Petitions Information at (571) 272-3282.

The above-identified application became abandoned for failure to file a timely and proper reply to a notice or action by the United States Patent and Trademark Office. The date of abandonment is the day after the expiration date of the period set for reply in the office notice or action plus an extensions of time actually obtained.

APPLICANT HEREBY PETITIONS FOR REVIVAL OF THIS APPLICATION

NOTE: A grantable petition requires the following items:
(1) Petition fee;
(2) Reply and/or issue fee;
(3) Terminal disclaimer with disclaimer fee - required for all utility and plant applications filed before June 8, 1995; and for all design applications; and
(4) Statement that the entire delay was unintentional.

1.Petition fee
☐ Small entity-fee $ _____ (37 CFR 1.17(m)). Applicant claims small entity status. See 37 CFR 1.27.

☑ Other than small entity – fee $ 1,540.00 (37 CFR 1.17(m))

2. Reply and/or fee
A. The reply and/or fee to the above-noted Office action in the form of _____(identify type of reply):

☐ has been filed previously on _____.
☐ is enclosed herewith.

B. The issue fee and publication fee (if applicable) of $ 1,740.00.
☐ has been paid previously on _____.
☑ is enclosed herewith.

This collection of information is required by 37 CFR 1.137(b). The information is required to obtain or retain a benefit by the public which is to file (and by the USPTO to process) an application. Confidentiality is governed by 35 U.S.C. 122 and 37 CFR 1.11 and 1.14. This collection is estimated to take 1.0 hour to complete, including gathering, preparing, and submitting the completed application form to the USPTO. Time will vary depending upon the individual case. Any comments on the amount of time you require to complete this form and/or suggestions for reducing this burden, should be sent to the Chief Information Officer, U.S. Patent and Trademark Office, U.S. Department of Commerce, P.O. Box 1450, Alexandria, VA 22313-1450. DO NOT SEND FEES OR COMPLETED FORMS TO THIS ADDRESS. SEND TO: Mail Stop Petition, Commissioner for Patents, P.O. Box 1450, Alexandria, VA 22313-1450.

If you need assistance in completing the form, call 1-800-PTO-9199 and select option 2.

06/13/2008 VBUI22 00000001 503105 10710665
01 FC:1453 1540.00 DA

RECEIVED
CENTRAL FAX CENTER
JUN 12 2008

PTO/SB/64 (01-08)
Approved for use through 06/30/2008. OMB 0651-0031
U.S. Patent and Trademark Office; U.S. DEPARTMENT OF COMMERCE
Under the Paperwork Reduction Act of 1995, no persons are required to respond to a collection of information unless it displays a valid OMB control number.

3. Terminal disclaimer with disclaimer fee

☐ Since this utility/plant application was filed on or after June 8, 1995, no terminal disclaimer is required.

☐ A terminal disclaimer (and disclaimer fee (37 CFR 1.20(d)) of $ _____ for a small entity or $ _____ for other than a small entity) disclaiming the required period of time is enclosed herewith (see PTO/SB/63).

4. STATEMENT: The entire delay in filing the required reply from the due date for the required reply until the filing of a grantable petition under 37 CFR 1.137(b) was unintentional. [NOTE: The United States Patent and Trademark Office may require additional information if there is a question as to whether either the abandonment or the delay in filing a petition under 37 CFR 1.137(b) was unintentional (MPEP 711.03(c), subsections (III)(C) and (D)).]

WARNING:

Petitioner/applicant is cautioned to avoid submitting personal information in documents filed in a patent application that may contribute to identity theft. Personal information such as social security numbers, bank account numbers, or credit card numbers (other than a check or credit card authorization form PTO-2038 submitted for payment purposes) is never required by the USPTO to support a petition or an application. If this type of personal information is included in documents submitted to the USPTO, petitioners/applicants should consider redacting such personal information from the documents before submitting them to the USPTO. Petitioner/applicant is advised that the record of a patent application is available to the public after publication of the application (unless a non-publication request in compliance with 37 CFR 1.213(a) is made in the application) or issuance of a patent. Furthermore, the record from an abandoned application may also be available to the public if the application is referenced in a published application or an issued patent (see 37 CFR 1.14). Checks and credit card authorization forms PTO-2038 submitted for payment purposes are not retained in the application file and therefore are not publicly available.

/Winston Hsu/	06/13/2008
Signature	Date
Winston Hsu	41,526
Typed or printed name	Registration Number, if applicable
P.O. BOX 506	Voice Mail: 302-729-1562
Address	Telephone Number
Merrifield, VA 22116 U.S.A.	
Address	

Enclosures:
- ☑ Fee Payment
- ☐ Reply
- ☐ Terminal Disclaimer Form
- ☑ Additional sheets containing statements establishing unintentional delay
- ☑ Other: The Issue Fee Transmittal Form (PTOL-85)

CERTIFICATE OF MAILING OR TRANSMISSION [37 CFR 1.8(a)]

I hereby certify that this correspondence is being:

- ☐ Deposited with the United States Postal Service on the date shown below with sufficient postage as first class mail in an envelope addressed to: Mail Stop Petition, Commissioner for Patents, P. O. Box 1450, Alexandria, VA 22313-1450.
- ☑ Transmitted by facsimile on the date shown below to the United States Patent and Trademark Office at (571) 273-8300.

	/Krystal Pan/
Date	Signature
	Krystal Pan
	Typed or printed name of person signing certificate

UNITED STATES PATENT AND TRADEMARK OFFICE

Commissioner for Patents
United States Patent and Trademark Office
P.O. Box 1450
Alexandria, VA 22313-1450
www.uspto.gov

GREENBERG & LIEBERMAN
314 PHILADELPHIA AVE.
TAKOMA PARK, MD 20912

COPY MAILED

NOV 18 2005

OFFICE OF PETITIONS

In re Application of :
Joel Fried, et. al. :
Application No. 10/710,689 : ON PETITION
Filed: July 28, 2004 :
Attorney Docket No. 236105102004 :

This is a decision on the petition under 37 CFR 1.137(b), filed by facsimile transmission on October 3, 2005, to revive the above-identified application.

The petition is **GRANTED**.

The application became abandoned for failure to reply to the non-final Office action mailed February 24, 2005. A Notice of Abandonment was mailed on September 21, 2005.

The petition satisfies the requirements of 37 CFR 1.137(b) in that petitioner has supplied (1) the reply in the form of an amendment; (2) the petition fee of $750; and (3) an adequate statement of unintentional delay.

A review of the record fails to indicate that a change of address has been submitted. Therefore, since the address given on the petition differs from the address of record, a courtesy copy of this decision is being mailed to the address on the petition. If appropriate, a change of address should be filed in accordance with MPEP 601.03. All future correspondence regarding this application will be directed solely to the address of record until otherwise instructed.

The application file is being referred to Technology Center Art Unit 3611, for review of the amendment filed with the instant petition.

Telephone inquiries concerning this decision should be directed to the undersigned at (571) 272-3226.

Andrea Smith
Petitions Examiner
Office of Petitions

cc: Michael L. Greenberg
2141 Wisconsin Avenue, NW
Suite C2
Washington, DC 20007

UNITED STATES PATENT AND TRADEMARK OFFICE

Commissioner for Patents
United States Patent and Trademark Office
P.O. Box 1450
Alexandria, VA 22313-1450
www.uspto.gov

TEXAS INSTRUMENTS INCORPORATED
P.O. BOX 655474, M/S 3999
DALLAS, TX 75265

COPY MAILED

FEB 19 2009

OFFICE OF PETITIONS

In re Application of :
Sanish Koshi Jacob :
Application No. 10/710,692 : DECISION ON PETITION
Filed: July 28, 2004 :
Attorney Docket No. TI-37611 :

This is a decision on the petition under the unintentional provisions of 37 CFR 1.137(b), filed October 24, 2008, to revive the above-identified application.

The petition is **GRANTED**.

This application became abandoned for failure to timely pay the issue and publication fee on or before July 21, 2008, as required by the Notice of Allowance and Fee(s) Due, mailed April 21, 2008. Accordingly, the date of abandonment of this application is July 22, 2008.

There is no indication that the person signing the petition was ever given a power of attorney or authorization of agent to prosecute the above-identified application. However, in accordance with 37CFR 1.34(a), the signature of Alan Stewart appearing on the petition shall constitute a representation to the United States Patent and Trademark Office that he is authorized to represent the particular party in whose behalf he acts. If petitioner desires to receive future correspondence regarding this application, the appropriate power of attorney or authorization of agent must be submitted.

The petition satisfies the requirements of 37 CFR 1.137(b) in that petitioner has supplied (1) the reply in the form of payment of the issue fee of $1,510 and the publication fee of $300, (2) the petition fee of $1,620; and (3) a proper statement of unintentional delay.

Telephone inquiries concerning this decision should be directed to Denise Williams at (571) 272-8930.

This application is being referred to the Office of Data Management for processing into a patent.

Andrea Smith
Petitions Examiner
Office of Petitions

UNITED STATES PATENT AND TRADEMARK OFFICE

Commissioner for Patents
United States Patent and Trademark Office
P.O. Box 1450
Alexandria, VA 22313-1450
www.uspto.gov

COPY MAILED

JUL 27 2007

OFFICE OF PETITIONS

HARBIN KING & KLIMA
500 NINTH STREET SE
WASHINGTON, DC 20003

In re Application of :
Robert J. Mills, et al. :
Application No. 10/710,723 : ON PETITION
Filed: July 30, 2004 :
Attorney Docket No. 03130.0012.PCUS00 :

This is a decision on the petition under 37 CFR 1.137(b), filed April 26, 2007, to revive the above-identified application.

The petition is **GRANTED**.

The application became abandoned for failure to timely file a reply within the meaning of 37 CFR 1.113 to the final Office action of October 24, 2006. This decision precedes the mailing of a Notice of Abandonment. On April 26, 2007, the present petition was filed.

The proposed reply required for consideration of a petition to revive must be a Notice of Appeal (and appeal fee required by 37 CFR 41.20(b)(2), an amendment that *prima facie* places the application in condition for allowance, a Request for Continued Examination and submission (37 CFR 1.114), or the filing of a continuing application under 37 CFR 1.53(b). See MPEP 711.03(c)(III)(A)(2).

The present petition satisfies the requirements of 37 CFR 1.137(b) in that petitioner has supplied (1) the reply in the form of a Request for Continued Examination (RCE) under 37 CFR 1.114, including the fee of $790; (2) the petition fee of $1,500; and (3) an adequate statement of unintentional delay.

It is noted that a three-month extension of time was paid on April 26, 2007. Extensions of time under 37 CFR 1.136 are available only if asked for prior to or with the response. In no case, however, may an applicant respond later than the maximum time period set by statute. Accordingly, if the question of abandonment arises when the provisions of 37 CFR 1.136 can no longer be used, then the application is abandoned when the unextended time for response has expired. Since, no extension of time fees are due on a petition for revival, the $1,020 extension fee paid with the present petition is being credited to counsel's deposit account.

This application is being referred to Technology Center AU 3745 for processing of the RCE and for appropriate action by the Examiner in the normal course of business on the amendment submitted in accordance with 37 CFR 1.114.

Telephone inquiries concerning this decision should be directed to the undersigned at (571) 272-3204. Inquiries relating to further prosecution should be directed to the Technology Center.

Sherry D. Brinkley
Petitions Examiner
Office of Petitions

UNITED STATES PATENT AND TRADEMARK OFFICE

Commissioner for Patents
United States Patent and Trademark Office
P.O. Box 1450
Alexandria, VA 22313-1450
www.uspto.gov

JUDGE & MURAKAMI IP ASSOCIATES
DOJIMIA BUILDING, 7TH FLOOR
6-8 NISHITEMMA 2-CHOME, KITA-KU
OSAKA-SHI 530-0-047 JP JAPAN

COPY MAILED

MAR 2 9 2007

OFFICE OF PETITIONS

In re Patent No.: 7,136,153 :
Issued: November 14, 2006 :
Application No.: 10/710,726 : ON PETITION
Filed: July 30, 2004 :
Attorney Docket No.: 018.0025 :

This is a decision on the petition filed November 1, 2006, which is being treated as a petition under 37 CFR 3.81(b)[1] to correct the assignee on the front page of the above-identified patent by way of a Certificate of Correction.

The petition is **GRANTED**.

The file is being referred to the Certificates of Correction Branch for issuance of a Certificate of Correction to add Hokuyo Automatic Co., Ltd, as an assignee on the first page of the patent.

Telephone inquiries concerning this matter may be directed to the undersigned at (571) 272-3204. Inquiries related to the certificate of correction should be referred to the Certificates of Correction Branch at (571) 272-4200.

Sherry D. Brinkley
Petitions Examiner
Office of Petitions

[1] *See* Official Gazette of June 22, 2004

UNITED STATES PATENT AND TRADEMARK OFFICE

Commissioner for Patents
United States Patent and Trademark Office
P.O. Box 1450
Alexandria, VA 22313-1450
www.uspto.gov

MAR 29 2007

In re Application of: Chang et al.	:	
Application No. 10/710,732	:	NOTICE OF WITHDRAWAL
Filed: 30 July 2004	:	FROM ISSUE
Attorney Docket No. 13041-US-PA	:	UNDER 37 CFR ∋ 1.313
	:	

The purpose of this communication is to inform you that the above identified application is being withdrawn from issue pursuant to 37 CFR ∋ 1.313.

The above-identified application is hereby withdrawn from issue. The Notice of Allowance and Issue Fee Due and the Notice of Allowability mailed December 20, 2006, are hereby vacated.

The application is being withdrawn to permit reopening of prosecution. The reasons therefor will be communicated to you by the examiner.

If the issue fee has been submitted, the applicant may request a refund, or may request that the fee be credited to a deposit account. However, applicant may wait until the application is either again found allowable or held abandoned. If the application is allowed, upon receipt of a new Notice of Allowance and Issue Fee Due, applicant may request that the previously submitted issue fee be applied toward payment of the issue fee in the amount identified on the new Notice of Allowance and Issue Fee Due. If the application is abandoned, applicant may request either a refund or a credit to a Deposit Account.

Telephone inquires should be directed to Carl Whitehead, Jr. at (571) 272-1702.

The above-identified application is being forwarded to the examiner for prompt appropriate action.

Sharon A. Gibson, Director
Technology Center 2800
Semiconductors, Electrical and Optical
Systems and Components

UNITED STATES PATENT AND TRADEMARK OFFICE

Commissioner for Patents
United States Patent and Trademark Office
P.O. Box 1450
Alexandria, VA 22313-1450
www.uspto.gov

SCHLUMBERGER OILFIELD SERVICES
200 GILLINGHAM LANE
MD 200-9
SUGAR LAND TX 77478

COPY MAILED

FEB 27 2006

OFFICE OF PETITIONS

In re Application of :
Matheus Nogueira et al :
Application No. 10/710,743 : ON PETITION
Filed: July 30, 2004 :
Attorney Docket No. 20.2909 :

This is a decision on the petition under 37 CFR 1.78(a)(6), filed November 7, 2005, to accept an unintentionally delayed claim under 35 U.S.C.§ 119(e) for the benefit of prior-filed provisional Application No. 60/511,212, filed October 15, 2003.

The petition is **DISMISSED AS MOOT**.

The Office is unclear as to why the above petition was filed since the benefit claim to Provisional Application No. 60/511,212, was present in the specification upon filing of the instant application. Therefore, the petition is unnecessary and dismissed as moot.

Telephone inquiries should be directed to the undersigned at (571)272-3208.

This matter is being forwarded to Technology Center AU 3672.

Karen Creasy

Karen Creasy
Petitions Examiner
Office of Petitions
Office of the Deputy Commissioner
for Patent Examination Policy

UNITED STATES PATENT AND TRADEMARK OFFICE

COMMISSIONER FOR PATENTS
UNITED STATES PATENT AND TRADEMARK OFFICE
P.O. BOX 1450
ALEXANDRIA, VA 22313-1450
www.uspto.gov

BROOKS KUSHMAN P.C./FGTL
1000 TOWN CENTER
22ND FLOOR
SOUTHFIELD, MI 48075-1238

COPY MAILED

DEC 15 2005

OFFICE OF PETITIONS

In re Application of :
Ryan McGee, et al. :
Application No. 10/710,750 : ON PETITION
Filed: July 30, 2004 :
Attorney Docket No.: 81098400 / FMC 1744 PUS :
:

This is a decision on the petition, filed December 12, 2005, under 37 CFR 1.313(c)(2) to withdraw the above-identified application from issue after payment of the issue fee.

The petition is **GRANTED**.

The above-identified application is withdrawn from issue for consideration of a submission under 37 CFR 1.114 (request for continued examination). See 37 CFR 1.313(c)(2).

Petitioner is advised that the issue fee paid on November 23, 2005, in the above-identified application, cannot be refunded. If, however, the above-identified application is again allowed, petitioner may request that it be applied towards the issue fee required by the new Notice of Allowance.[1]

Telephone inquiries relating to this decision should be directed to the undersigned at (571) 272-3204.

The application is being referred to Technology Center AU 3748 for further processing of the request for continued examination under 37 CFR 1.114.

Sherry D. Brinkley
Petitions Examiner
Office of Petitions

[1]The request to apply the issue fee to the new Notice may be satisfied by completing and returning the new Issue Fee Transmittal Form PTOL-85(b), which includes the following language thereon: "Commissioner for Patents is requested to apply the Issue Fee and Publication Fee (if any) or re-apply any previously paid issue fee to the application identified above." Petitioner is advised that, whether a fee is indicated as being due or not, the Issue Fee Transmittal Form **must** be completed and timely submitted to avoid abandonment. Note the language in bold text on the first page of the Notice of Allowance and Fee(s) Due (PTOL-85).

UNITED STATES PATENT AND TRADEMARK OFFICE

Commissioner for Patents
United States Patent and Trademark Office
P. O. Box 1450
Alexandria, VA 22313-1450
www.uspto.gov

NOVAK DRUCE & QUIGG, LLP
1300 EYE STREET, NW, SUITE 400 EAST
WASHINGTON, DC 20005

COPY MAILED

JUL 27 2006

OFFICE OF PETITIONS

In re Application of :
Per Persson :
Application No. 10/710,755 : ON PETITION
Filed: July 30, 2004 :
Attorney Docket No. 7589.184.PCUS00 :

This is a decision on the petition under 37 CFR 1.137(b), filed January 5, 2006, to revive the above-identified application.

The petition is **GRANTED**.

The above-identified application became abandoned for failure to reply in a timely manner to the non-final Office action mailed December 28, 2004, which set a shortened statutory period for reply of three (3) months. No extension of time under the provisions of 37 CFR 1.136(a) were obtained. Accordingly, the above-identified application became abandoned on March 29, 2005.

Telephone inquiries concerning this decision should be directed to Irvin Dingle at (571) 272-3210.

This matter is being referred to Technology Center AU 3747 for further processing.

Irvin Dingle
Petitions Examiner
Office of Petitions

UNITED STATES PATENT AND TRADEMARK OFFICE

Commissioner for Patents
United States Patent and Trademark Office
P.O. Box 1450
Alexandria, VA 22313-1450
www.uspto.gov

CALFEE HALTER & GRISWOLD, LLP
800 SUPERIOR AVENUE
SUITE 1400
CLEVELAND OH 44114

COPY MAILED
MAY 0 1 2006
OFFICE OF PETITIONS

In re Application of :
Hagopian, Song, Smock, Barkac, : DECISION ON PETITION
Campbell and Foukes :
Application No. 10/710,805 :
Filed: August 4, 2004 :
Attorney Docket No. 27474/06963 :

This is a decision on the petition under 37 CFR 1.182, filed October 11, 2005, to change the order of the names of the inventors.

The petition is **granted**.

The Office of Petitions has changed the order of the names of the inventors in the Office computer records as requested in the present petition. A corrected filing receipt accompanies this decision.

Petitioner paid a $130.00 petition fee; however, the fee for a petition under 37 CFR 1.182 is $400.00. Therefore, the Office will charged the amount owed of $270.00 to the Deposit Account, as authorized.

Telephone inquiries concerning this matter may be directed to the undersigned at (571) 272-3211.

Christina T. Donnell

Christina Tartera Donnell
Senior Petitions Attorney
Office of Petitions

Enclosure: Corrected Filing Receipt

UNITED STATES PATENT AND TRADEMARK OFFICE

Commissioner for Patents
United States Patent and Trademark Office
P.O. Box 1450
Alexandria, VA 22313-1450
www.uspto.gov

JJGJr: 01-06

Paper No: __

G.THOMAS WILLIAMS
MCGARRY BAIR PC
171 MONROE AVENUE
SUITE 600
GRAND RAPIDS MI 49503

COPY MAILED

JAN 27 2006

OFFICE OF PETITIONS

In re Application of :
Cummins, et al. :
Application No. 10/710,806 : DECISION
Filed: 4 August, 2004 :
Attorney Docket No.: 71483-0007 :

This is a decision on the petition, filed 17 October, 2005, to revive the instant nonprovisional application under the provisions of 37 C.F.R. §1.137(f).

The petition is **GRANTED**.

Petitioner states that the instant nonprovisional application is the subject of an application filed in a foreign country or otherwise requiring publication on 3 August, 2005. Moreover, Petitioner submitted the instant petition (with recision request) 17 October, 2005, upon learning of the error.

Thus, Petitioner alleges unintentional failure to notify the U.S. Patent and Trademark Office of this filing of the subject application in a foreign country within 45 days of that filing.

In view of the above, this application became abandoned pursuant to 35 U.S.C. §122(b)(2)(B)(iii) and 37 C.F.R. §1.213(c) for failure to timely notify the Office of the filing of an application in a foreign country, or under a multilateral international agreement, that requires publication of applications 18 months after filing.

A petition under 37 C.F.R. §1.137(f) must be accompanied by:

(1) the reply--which is met by the notification of such filing in a foreign country or under a multinational treaty;

(2) the petition fee as set forth in 37 C.F.R. §1.17(m); and

(3) a statement that the entire delay in filing the required reply from the due date of the reply until the filing of a grantable petition was unintentional.

The instant petition has been found to be in compliance with 37 C.F.R. §1.137(f). Accordingly, the failure to timely notify the Office of a foreign or international filing within 45 days after the date of filing of such foreign or international application as provided by 35 U.S.C. §122(b)(2)(B)(iii) and 37 C.F.R. §1.213(c) is accepted as having been unintentionally delayed.

The previous Request and Certification under 35 U.S.C. §122(b)(2)(B)(I) has been rescinded. A Notice Regarding Rescission of Nonpublication Request, which sets forth the projected publication date of 4 May, 2006, accompanies this decision.

This application is being released to Technology Center 3600 for further processing in due course.

Inquiries concerning this decision may be directed to the undersigned at (571) 272-3214.

John J. Gillon, Jr.
Senior Attorney
Office of Petitions

ATTACHMENT: Notice Regarding Rescission of Nonpublication Request

SPE RESPONSE FOR CERTIFICATE OF CORRECTION

Paper No.: _____

DATE : November 27, 2007

TO SPE OF : ART UNIT 2852

SUBJECT : Request for Certificate of Correction for Appl. No. 10/710806 patent no. 7284776

Please respond to this request for a certificate of correction within 7 days.

Please review the requested changes/corrections as shown in the **COCIN** document(s) in the IFW application image. No new matter should be introduced, nor should the scope or meaning of the claims be changed.

Please complete the response (see below) and forward the completed response to scanning using document code **COCX**.

Magdalene Talley

Certificates of Correction Branch

703-308-9390 ext. 116

Thank You For Your Assistance

The request for issuing the above-identified correction(s) is hereby:

Note your decision on the appropriate box.

☒ **Approved**	**All** changes apply.
☐ **Approved in Part**	Specify below which changes **do not** apply.
☐ **Denied**	State the reasons for denial below.

Comments: _____

_____

_____

_____

_____

SPE

3673
Art Unit

UNITED STATES PATENT AND TRADEMARK OFFICE

COMMISSIONER FOR PATENTS
UNITED STATES PATENT AND TRADEMARK OFFICE
P.O. BOX 1450
ALEXANDRIA, VA 22313-1450
WWW.USPTO.GOV

Paper No. None

CALFEE HALTER & GRISWOLD, LLP
800 SUPERIOR AVENUE
SUITE 1400
CLEVELAND OH 44114

COPY MAILED
JUN 16 2006
OFFICE OF PETITIONS

In re Application of	:	
David Hagopian, Inho Song, Alan	:	
Smock, Karen A. Barkac, Melanie S.	:	
Cambell, and Richard Foukes	:	
Application No. 10/710,810	:	DECISION ON PETITION
Filed: August 4, 2004	:	UNDER 37 C.F.R. §1.182
Attorney Docket No. 27475/07709	:	
Title PRODUCT COMPRISING A THIN-FILM	:	
RADIATION-CURED COATING ON A	:	
THREE-DIMENSIONAL SUBSTRATE	:	

This is a decision on the petition filed on August 1, 2005 under 37 C.F.R. §1.182, to change the order of the names of the inventors.

The present petition was not immediately matched with the correct electronic file, as the concurrently submitted amendment, petition, and transmittal form each bears the incorrect application number - 10/710,801. It is further noted that each of these papers contains an erroneous filing date of June 28, 2004. Petitioner is reminded that errors such as occurred can result in loss of rights and care must be taken to avoid such.

Petitioner has submitted a portion of the fee which is associated with the filing of this petition. The additional $270.00 which is due has been charged to Petitioner's Deposit Account, as authorized in the petition.

As such, the petition under 37 C.F.R. § 1.182 is **GRANTED**.

The order of the names of the inventors has been changed as follows:

David Hagopian
Inho Song

Alan Smock
Karen A. Barkac
Melanie S. Cambell
Richard Foukes

A corrected filing receipt reflecting this change is enclosed.

The Technology Center will be notified of this decision. The Technology Center's support staff will notify the Examiner of this decision, so that Request for Continued Examination (RCE) which was submitted on April 21, 2006 can be processed.

Telephone inquiries regarding *this decision* should be directed to the undersigned at (571) 272-3225. All other inquiries concerning examination procedures or status of the application should be directed to the Technology Center.

Paul Shanoski
Senior Attorney
Office of Petitions
United States Patent and Trademark Office

Encl. Corrected Filing Receipt

UNITED STATES PATENT AND TRADEMARK OFFICE

UNITED STATES DEPARTMENT OF COMMERCE
United States Patent and Trademark Office
Address: COMMISSIONER FOR PATENTS
P.O. Box 1450
Alexandria, Virginia 22313-1450
www.uspto.gov

APPL NO.	FILING OR 371 (c) DATE	ART UNIT	FIL FEE REC'D	ATTY.DOCKET NO	DRAWINGS	TOT CLMS	IND CLMS
10/710,810	08/04/2004	1773	1044	27475/07709	13	28	3

CONFIRMATION NO. 4809

24024
CALFEE HALTER & GRISWOLD, LLP
800 SUPERIOR AVENUE
SUITE 1400
CLEVELAND, OH 44114

CORRECTED FILING RECEIPT

OC000000019238551

Date Mailed: 06/13/2006

Receipt is acknowledged of this regular Patent Application. It will be considered in its order and you will be notified as to the results of the examination. Be sure to provide the U.S. APPLICATION NUMBER, FILING DATE, NAME OF APPLICANT, and TITLE OF INVENTION when inquiring about this application. Fees transmitted by check or draft are subject to collection. Please verify the accuracy of the data presented on this receipt. **If an error is noted on this Filing Receipt, please mail to the Commissioner for Patents P.O. Box 1450 Alexandria Va 22313-1450. Please provide a copy of this Filing Receipt with the changes noted thereon. If you received a "Notice to File Missing Parts" for this application, please submit any corrections to this Filing Receipt with your reply to the Notice. When the USPTO processes the reply to the Notice, the USPTO will generate another Filing Receipt incorporating the requested corrections (if appropriate).**

Applicant(s)

David Hagopian, Deerfield, IL;
Inho Song, Chesterland, OH;
Alan Smock, Dubois, IN;
Karen A. Barkac, North Huntingdon, PA;
Melanie S. Cambell, Freeport, PA;
Richard Foukes, Mars, PA;

Assignment For Published Patent Application

MASTERBRAND CABINETS, INC., Jasper, IN

Power of Attorney: The patent practitioners associated with Customer Number **24024**.

Domestic Priority data as claimed by applicant

Foreign Applications

If Required, Foreign Filing License Granted: 09/16/2004

The country code and number of your priority application, to be used for filing abroad under the Paris Convention, is US10/710,810

Projected Publication Date: Not Applicable

Non-Publication Request: No

Early Publication Request: No

Title

PRODUCT COMPRISING A THIN-FILM RADIATION-CURED COATING ON A THREE-DIMENSIONAL SUBSTRATE

Preliminary Class

428

PROTECTING YOUR INVENTION OUTSIDE THE UNITED STATES

Since the rights granted by a U.S. patent extend only throughout the territory of the United States and have no effect in a foreign country, an inventor who wishes patent protection in another country must apply for a patent in a specific country or in regional patent offices. Applicants may wish to consider the filing of an international application under the Patent Cooperation Treaty (PCT). An international (PCT) application generally has the same effect as a regular national patent application in each PCT-member country. The PCT process **simplifies** the filing of patent applications on the same invention in member countries, but **does not result** in a grant of "an international patent" and does not eliminate the need of applicants to file additional documents and fees in countries where patent protection is desired.

Almost every country has its own patent law, and a person desiring a patent in a particular country must make an application for patent in that country in accordance with its particular laws. Since the laws of many countries differ in various respects from the patent law of the United States, applicants are advised to seek guidance from specific foreign countries to ensure that patent rights are not lost prematurely.

Applicants also are advised that in the case of inventions made in the United States, the Director of the USPTO must issue a license before applicants can apply for a patent in a foreign country. The filing of a U.S. patent application serves as a request for a foreign filing license. The application's filing receipt contains further information and guidance as to the status of applicant's license for foreign filing.

Applicants may wish to consult the USPTO booklet, "General Information Concerning Patents" (specifically, the section entitled "Treaties and Foreign Patents") for more information on timeframes and deadlines for filing foreign patent applications. The guide is available either by contacting the USPTO Contact Center at 800-786-9199, or it can be viewed on the USPTO website at http://www.uspto.gov/web/offices/pac/doc/general/index.html.

For information on preventing theft of your intellectual property (patents, trademarks and copyrights), you may wish to consult the U.S. Government website, http://www.stopfakes.gov. Part of a Department of Commerce initiative, this website includes self-help "toolkits" giving innovators guidance on how to protect intellectual property in specific countries such as China, Korea and Mexico. For questions regarding patent enforcement issues, applicants may call the U.S. Government hotline at 1-866-999-HALT (1-866-999-4158).

LICENSE FOR FOREIGN FILING UNDER
Title 35, United States Code, Section 184
Title 37, Code of Federal Regulations, 5.11 & 5.15

GRANTED

The applicant has been granted a license under 35 U.S.C. 184, if the phrase "IF REQUIRED, FOREIGN FILING LICENSE GRANTED" followed by a date appears on this form. Such licenses are issued in all applications where the conditions for issuance of a license have been met, regardless of whether or not a license may be required as set forth in 37 CFR 5.15. The scope and limitations of this license are set forth in 37 CFR 5.15(a) unless an earlier license has been issued under 37 CFR 5.15(b). The license is subject to revocation upon written notification. The

date indicated is the effective date of the license, unless an earlier license of similar scope has been granted under 37 CFR 5.13 or 5.14.

This license is to be retained by the licensee and may be used at any time on or after the effective date thereof unless it is revoked. This license is automatically transferred to any related applications(s) filed under 37 CFR 1.53(d). This license is not retroactive.

The grant of a license does not in any way lessen the responsibility of a licensee for the security of the subject matter as imposed by any Government contract or the provisions of existing laws relating to espionage and the national security or the export of technical data. Licensees should apprise themselves of current regulations especially with respect to certain countries, of other agencies, particularly the Office of Defense Trade Controls, Department of State (with respect to Arms, Munitions and Implements of War (22 CFR 121-128)); the Bureau of Industry and Security, Department of Commerce (15 CFR parts 730-774); the Office of Foreign Assets Control, Department of Treasury (31 CFR Parts 500+) and the Department of Energy.

NOT GRANTED

No license under 35 U.S.C. 184 has been granted at this time, if the phrase "IF REQUIRED, FOREIGN FILING LICENSE GRANTED" DOES NOT appear on this form. Applicant may still petition for a license under 37 CFR 5.12, if a license is desired before the expiration of 6 months from the filing date of the application. If 6 months has lapsed from the filing date of this application and the licensee has not received any indication of a secrecy order under 35 U.S.C. 181, the licensee may foreign file the application pursuant to 37 CFR 5.15(b).

UNITED STATES PATENT AND TRADEMARK OFFICE

Commissioner for Patents
United States Patent and Trademark Office
P.O. Box 1450
Alexandria, VA 22313-1450
www.uspto.gov

JIANQ CHYUN INTELLECTUAL
PROPERTY OFFICE
7 FLOOR-1, NO. 100
ROOSEVELT ROAD, SECTION 2
TAIPEI 100 TW TAIWAN

COPY MAILED

JUN 20 2008

In re Application of :
Lin, et al. :
Application No. 10/710,843 : DECISION
Filed: 6 August, 2004 :
Attorney Docket No. 13063-US-PA :

This is a decision on the petition, filed 11 March, 2008, considered as a petition under 37 C.F.R. §1.181 (no fee) requesting withdrawal of the holding of abandonment in the above-identified application.

The petition is **DISMISSED**.

Any request for reconsideration of this decision should be filed **within two (2) months** from the mail date of this decision. *Note* 37 C.F.R. §1.181(f). The request for reconsideration should include a cover letter and be entitled as a "Renewed Petition under 37 C.F.R. §1.181 to Withdraw the Holding of Abandonment." (If Petitioner cannot satisfy the evidentiary requirements necessary for a petition to withdraw the holding of abandonment to be granted, Petitioner may alternatively file a petition under 37 C.F.R. §1.137(b) stating that the delay was unintentional. Public Law 97-247, § 3, 96 Stat. 317 (1982), which revised patent and trademark fees, amended 35 U.S.C. § 41(a)(7) to provide for the revival of an "unintentionally" abandoned application without a showing that the delay in prosecution or in late payment of the issue fee was "unavoidable." This amendment to 35 U.S.C. § 41(a)(7) has been implemented in 37 C.F.R. §1.137(b). A petition alleging "unintentional" delay under 37 C.F.R. §1.137(b) must be

accompanied by the petition fee, and Petitioner always should refer to the Office website (http://www.uspto.gov/main/howtofees.htm) to ensure submission of the proper fees. (A specific fee is not stated here because fee amounts change and there is no way to know when Petitioner will submit materials for filing.))

This is **not** a final agency action within the meaning of 5 U.S.C. § 704.

A proper showing requires at the very minimum:

- A statement from practitioner stating that the Office action was not received by the practitioner;

- A statement from the practitioner attesting to the fact that a search of the file jacket and docket records for the application indicates that the Office action was not received with a copy of those docket records; and

- A **brief** statement of the calendaring process and a copy of the due-date (calendar) docket record(s) where the nonreceived Office action would have been scheduled for reply had it been received must be attached to and referenced in the practitioner's statement.

Alternatively:

- A statement from practitioner stating that the reply was timely submitted by the practitioner;

- Copies of all papers submitted as and/or in support of that reply, with/and a copy of the date-stamped receipt card, Office FAX receipt acknowledgement (not simply Petitioner's FAX transmittal), or EFS receipt acknowledgment from the Office, along with practitioner's attestation as to the correctness/completeness of his/her records.

The showing(s) must include that of the person(s) with first-hand knowledge and an acknowledgment by the Petitioner that he/she has reviewed that information in compliance with his/her duty of candor to the Office.

BACKGROUND

The record reflects as follows:

This application was held abandoned for Petitioner's failure to reply timely and properly (fees due) to the Notice of Allowance/Allowability and Fees Due mailed on 30 November, 2007, with reply due under a non-extendable deadline on or before 29 February, 2008.

The application went abandoned by operation of law after midnight 29 February, 2008.

The Office mailed the Notice of Abandonment on 10 March, 2008.

On 12 March, 2008, Petitioner filed the instant petition, asserting that the reply (fees due) was submitted via FAX on 19 February, 2008, with authority to charge fees to Deposit Account 50-2620, but that Petitioner failed to recognize until at least a day later that Petitioner had insufficient funds (it appears, only $82.00) at the time the authorization was given, and thereafter, Petitioner avers, he transferred additional and sufficient funds to the deposit account.

Notably, Petitioner then failed to reauthorize the Office to charge the fees due before the due date. The final date for payment came and went without that authorization, and the application went abandoned.

Clearly, the Office sought to act on Petitioner's instructions, but the state of Petitioner's deposit account made that impossible. Thereafter, when Petitioner avers he replenished the account, Petitioner gave no new instructions to the Office to charge fees before the due date for those fees.

Thus, Petitioner lacks herein a showing that Petitioner:

- replied timely and properly to the Office action in question—rather, it was Petitioner's failure to maintain sufficient funds in the deposit account against which to charge fees due when Petitioner gave that authorization (on 19 February, 2008); and
- re-authorized that charge after he avers he replenished the deposit account and before the application went abandoned by operation of law.

The guidance in the Commentary at MPEP §711.03(c) sets forth the showing requirements for overcoming the presumptions herein.[1]

---

[1] The guidance in the Commentary at MPEP §711.03(c) as to non-received Office actions and timely filed replies is as follows:

A. Petition To Withdraw Holding of Abandonment Based on Failure To Receive Office Action

In *Delgar v. Schulyer*, 172 USPQ 513 (D.D.C. 1971), the court decided that the Office should mail a new Notice of Allowance in view of the evidence presented in support of the contention that the applicant's representative did not receive the original Notice of Allowance. Under the reasoning of *Delgar*, an allegation that an Office action was never received may be considered in a petition to withdraw the holding of abandonment. If adequately supported, the Office may grant the petition to withdraw the holding of abandonment and remail the Office action. That is, the reasoning of *Delgar* is applicable regardless of whether an application is held abandoned for failure to timely pay the issue fee (35 U.S.C. 151) or for failure to prosecute (35 U.S.C. 133).

To minimize costs and burdens to practitioners and the Office, the Office has modified the showing required to establish nonreceipt of an Office action. The showing required to establish nonreceipt of an Office communication must include a statement from the practitioner **>describing the system used for recording an Office action received at the correspondence address of record with the USPTO. The statement should establish that the docketing system is sufficiently reliable. It is expected that the record would include, but not be limited to, the application number, attorney docket number, the mail date of the Office action and the due date for the response.

Practitioner must state that the Office action was not received at the correspondence address of record, and that a search of the practitioner's record(s), including any file jacket or the equivalent, and the application contents, indicates that the Office action was not received. A copy of the record(s) used by the practitioner where the non-received Office action would have been entered had it been received is required.

A copy of the practitioner's record(s) required to show non-receipt of the Office action should include the master docket for the firm. That is, if a three month period for reply was set in the nonreceived Office action, a copy of the master docket report showing all replies docketed for a date three months from the mail date of the nonreceived Office action must be submitted as documentary proof of nonreceipt of the Office action. If no such master docket exists, the practitioner should so state and provide other evidence such as, but not limited to, the following: the application file jacket; incoming mail log; calendar; reminder system; or the individual docket record for the application in question.<

The showing outlined above may not be sufficient if there are circumstances that point to a conclusion that the Office action may have been lost after receipt rather than a conclusion that the Office action was lost in the mail (e.g., if the practitioner has a history of not receiving Office actions).

Evidence of nonreceipt of an Office communication or action (e.g., Notice of Abandonment or an advisory action) other than that action to which reply was required to avoid abandonment would not warrant withdrawal of the holding of abandonment. Abandonment takes place by

Out of an abundance of caution, Petitioners always are reminded that the filing of a petition under 37 C.F.R. §1.181 does not toll any periods that may be running any action by the Office and a petition seeking relief under the regulation must be filed within two (2) months of the act complained of (see: 37 C.F.R. §1.181(f)), and that those registered to practice and all others who make representations before the Office are reminded to inquire into the underlying facts of representations made to the Office and support averments with the appropriate documentation– since all owe to the Office the continuing duty to disclose.[2]

The availability of applications and application papers online to applicants/practitioners who diligently associate their Customer Number with the respective application(s) now provides an applicant/practitioner on-demand information as to events/transactions in an application.

(*See* MPEP § 711.03(c) under subheading "Petition to Withdraw Holding of Abandonment Based on Failure to Receive Office Action," alternative "A Reply Was Timely Filed"; see also: "Withdrawing the Holding of Abandonment When Office Actions Are Not Received," 1156 Official Gazette 53 (November 16, 1993).)

---

operation of law for failure to reply to an Office action or timely pay the issue fee, not by operation of the mailing of a Notice of Abandonment. See *Lorenz v. Finkl*, 333 F.2d 885, 889-90, 142 USPQ 26, 29-30 (CCPA 1964); *Krahn v. Commissioner*, 15 USPQ2d 1823, 1824 (E.D. Va 1990); *In re Application of Fischer*, 6 USPQ2d 1573, 1574 (Comm'r Pat. 1988).

B. Petition To Withdraw Holding of Abandonment Based on Evidence That a Reply Was Timely Mailed or Filed

37 CFR 1.10(c) through 1.10(e) and 1.10(g) set forth procedures for petitioning the Director of the USPTO to accord a filing date to correspondence as of the date of deposit of the correspondence as "Express Mail." A petition to withdraw the holding of abandonment relying upon a timely reply placed in "Express Mail" must include an appropriate petition under 37 CFR 1.10(c), (d), (e), or (g) (see MPEP § 513). When a paper is shown to have been mailed to the Office using the "Express Mail" procedures, the paper must be entered in PALM with the "Express Mail" date.

Similarly, applicants may establish that a reply was filed with a postcard receipt that properly identifies the reply and provides *prima facie* evidence that the reply was timely filed. See MPEP § 503. For example, if the application has been held abandoned for failure to file a reply to a first Office action, and applicant has a postcard receipt showing that an amendment was timely filed in response to the Office action, then the holding of abandonment should be withdrawn upon the filing of a petition to withdraw the holding of abandonment. When the reply is shown to have been timely filed based on a postcard receipt, the reply must be entered into PALM using the date of receipt of the reply as shown on the post card receipt.

Where a certificate of mailing under 37 CFR 1.8, but not a postcard receipt, is relied upon in a petition to withdraw the holding of abandonment, see 37 CFR 1.8(b) and MPEP § 512. As stated in 37 CFR 1.8(b)(3) the statement that attests to the previous timely mailing or transmission of the correspondence must be on a personal knowledge basis, or to the satisfaction of the Director of the USPTO. If the statement attesting to the previous timely mailing is not made by the person who signed the Certificate of Mailing (i.e., there is no personal knowledge basis), then the statement attesting to the previous timely mailing should include evidence that supports the conclusion that the correspondence was actually mailed (e.g., copies of a mailing log establishing that correspondence was mailed for that application). When the correspondence is shown to have been timely filed based on a certificate of mailing, the correspondence is entered into PALM with the actual date of receipt (i.e., the date that the duplicate copy of the papers was filed with the statement under 37 CFR 1.8).

37 CFR 1.8(b) also permits applicant to notify the Office of a previous mailing or transmission of correspondence and submit a statement under 37 CFR 1.8(b)(3) accompanied by a duplicate copy of the correspondence when a reasonable amount of time (e.g., more than one month) has elapsed from the time of mailing or transmitting of the correspondence. Applicant does not have to wait until the application becomes abandoned before notifying the Office of the previous mailing or transmission of the correspondence. Applicant should check the private Patent Application Information Retrieval (PAIR) system for the status of the correspondence before notifying the Office. See MPEP § 512.

C. Treatment of Untimely Petition To Withdraw Holding of Abandonment

37 CFR 1.181(f) provides that, *inter alia*, except as otherwise provided, any petition not filed within 2 months from the action complained of may be dismissed as untimely. Therefore, any petition (under 37 CFR 1.181) to withdraw the holding of abandonment not filed within 2 months of the mail date of a notice of abandonment (the action complained of) may be dismissed as untimely. 37 CFR 1.181(f).

Rather than dismiss an untimely petition to withdraw the holding of abandonment under 37 CFR 1.181(f), the Office may require a terminal disclaimer as a condition of granting an untimely petition to withdraw the holding of abandonment.

[2] See supplement of 17 June, 1999. The Patent and Trademark Office is relying on Petitioner's duty of candor and good faith and accepting a statement made by Petitioner. See Changes to Patent Practice and Procedure, 62 Fed. Reg. at 53160 and 53178, 1203 Off. Gaz. Pat. Office at 88 and 103 (responses to comments 64 and 109)(applicant obligated under 37 C.F.R. §10.18 to inquire into the underlying facts and circumstances when providing statements to the Patent and Trademark Office).

Allegations as to the Request to
Withdraw the Holding of Abandonment

The courts have determined the construct for properly supporting a petition seeking withdrawal of a holding of abandonment.[3] (See, also, the commentary at MPEP §711.03(c)(I)(A) and (B).)

And the regulation requires that relief be sought within two (2) months of the act complained of.

The petition fails to satisfy all of the above-stated requirements in that Petitioner failed make the showing required.

CONCLUSION

Accordingly, the petition is **dismissed**.

ALTERNATIVE VENUE

If Petitioner cannot supply the evidence necessary to withdraw the holding of abandonment, or simply does not wish to, Petitioner should consider filing a petition under 37 C.F.R. §1.137(b) stating that the delay was unintentional. Public Law 97-247, § 3, 96 Stat. 317 (1982), which revised patent and trademark fees, amended 35 U.S.C. §41(a)(7) to provide for the revival of an "unintentionally" abandoned application without a showing that the delay in prosecution or in late payment of the issue fee was "unavoidable." This amendment to 35 U.S.C. §41(a)(7) has been implemented in 37 C.F.R. §1.137(b). A petition alleging "unintentional" delay under 37 C.F.R. §1.137(b) must be accompanied by the petition fee, and Petitioner always should refer to the Office website (http://www.uspto.gov/main/howtofees.htm) to ensure submission of the proper fees. (A specific fee is not stated here because fee amounts change and there is no way to know when Petitioner will submit materials for filing.))

The filing of a petition under 37 C.F.R. §1.137(b) cannot be intentionally delayed and therefore must be filed promptly. A person seeking revival due to unintentional delay cannot make a statement that the delay was unintentional unless the entire delay, including the date it was discovered that the application was abandoned until the filing of the petition to revive under 37 C.F.R. §1.137(b), was unintentional. A statement that the delay was unintentional is not appropriate if Petitioner intentionally delayed the filing of a petition for revival under 37 C.F.R. §1.137(b).

Further correspondence with respect to this matter should be addressed as follows:

---

[3] See: Delgar v. Schulyer, 172 USPQ 513 (D.D.C. 1971).

By Mail: Mail Stop PETITION
Commissioner for Patents
P. O. Box 1450
Alexandria, VA 22313-1450

By hand: U. S. Patent and Trademark Office
Customer Service Window, Mail Stop Petitions
Randolph Building
401 Dulany Street
Alexandria, VA 22314

By facsimile: **(571) 273-8300**
Attn: Office of Petitions

While telephone inquiries regarding this decision may be directed to the undersigned at (571) 272-3214, it is noted that all practice before the Office is in writing (see: 37 C.F.R. §1.2[4]) and the proper authority for action on any matter in this regard are the statutes (35 U.S.C.), regulations (37 C.F.R.) and the commentary on policy (MPEP). Therefore, no telephone discussion may be controlling or considered authority for Petitioner's action(s).

/John J. Gillon, Jr./
John J. Gillon, Jr.
Senior Attorney
Office of Petitions

[4] The regulations at 37 C.F.R. §1.2 provide:

§1.2 Business to be transacted in writing.

All business with the Patent and Trademark Office should be transacted in writing. The personal attendance of applicants or their attorneys or agents at the Patent and Trademark Office is unnecessary. The action of the Patent and Trademark Office will be based exclusively on the written record in the Office. No attention will be paid to any alleged oral promise, stipulation, or understanding in relation to which there is disagreement or doubt.

UNITED STATES PATENT AND TRADEMARK OFFICE

Commissioner for Patents
United States Patent and Trademark Office
P.O. Box 1450
Alexandria, VA 22313-1450
www.uspto.gov

JIANQ CHYUN INTELLECTUAL
PROPERTY OFFICE
7 FLOOR-1, NO. 100
ROOSEVELT ROAD, SECTION 2
TAIPEI 100 TW TAIWAN

COPY MAILED

SEP 30 2008

OFFICE OF PETITIONS

In re Application of :
Lin, et al. :
Application No. 10/710,843 : DECISION
Filed: 6 August, 2004 :
Attorney Docket No. 13063-US-PA :

This is a decision on the petitions, filed 23 and 24 July, 2008, i.e., the "Renewed Petition to Withdraw the Holding of Abandonment and Revive under 37 C.F.R. §1.181," and considered as a petition under 37 C.F.R. §1.181 (no fee) requesting withdrawal of the holding of abandonment in the above-identified application, and alternatively, to revive an application under 37 C.F.R. §1.137(b) as having been abandoned due to unintentional delay.

The petition under 37 C.F.R. §1.181 is **DISMISSED**, and the petition under 37 C.F.R. §1.137(b) is **GRANTED**.

As to the Request to Withdraw
the Holding of Abandonment

A proper showing (for relief under 37 C.F.R. §1.181):

- (as to non-receipt) requires at the very minimum: a statement from practitioner stating that the Office action was not received by the practitioner; a statement from the practitioner attesting to the fact that a search of the file jacket and docket records for the application indicates that the Office action was not received with a copy of those docket records; and a brief statement of the calendaring process and a copy of the due-date (calendar) docket record(s) where the nonreceived Office action would have been scheduled for reply had it been received must be attached to and referenced in the practitioner's statement; alternatively,

- (for a showing of timely and proper reply) requires a statement from practitioner stating that the reply was timely submitted by the practitioner; and copies of all papers submitted as and/or in support of that reply, with/and a copy of the date-stamped receipt card, Office FAX receipt acknowledgement (not simply Petitioner's FAX transmittal), or EFS receipt acknowledgment from the Office, along with practitioner's attestation as to the correctness/completeness of his/her records.

The showing(s) must include that of the person(s) with first-hand knowledge and an acknowledgment by the Petitioner that he/she has reviewed that information in compliance with his/her duty of candor to the Office. Petitioner has failed to make the showings of search and non-discovery with the documentary presentations discussed herein (and set forth in the footnote, *infra*, and the showings as to docketing and calendaring, again with documentary support—all in support of the averment of nonreceipt.

Petitioner's attention always is drawn to the guidance in the Commentary at MPEP §711.03(c).[1]

---

[1] The Commentary at MPEP §711.03(c) provides in pertinent part:

*****

I. PETITION TO WITHDRAW HOLDING OF ABANDONMENT

A petition to revive an abandoned application (discussed below) should not be confused with a petition from an examiner's holding of abandonment. Where an applicant contends that the application is not in fact abandoned (e.g., there is disagreement as to the sufficiency of the reply, or as to controlling dates), a petition under 37 C.F.R. 1.181(a) requesting withdrawal of the holding of abandonment is the appropriate course of action, and such petition does not require a fee. Where there is no dispute as to whether an application is abandoned (e.g., the applicant's contentions merely involve the cause of abandonment), a petition under 37 C.F.R. 1.137 (accompanied by the appropriate petition fee) is necessary to revive the abandoned application.

Two additional procedures are available for reviving an application that has become abandoned due to a failure to reply to an Office Action: (1) a petition under 37 C.F.R. 1.137(a) based on unavoidable delay; and (2) a petition under 37 C.F.R. 1.137(b) based on unintentional delay.

A. Petition To Withdraw Holding of Abandonment Based on Failure To Receive Office Action

In *Delgar v. Schulyer*, 172 USPQ 513 (D.D.C. 1971), the court decided that the Office should mail a new Notice of Allowance in view of the evidence presented in support of the contention that the applicant's representative did not receive the original Notice of Allowance. Under the reasoning of *Delgar*, an allegation that an Office action was never received may be considered in a petition to withdraw the holding of abandonment. If adequately supported, the Office may grant the petition to withdraw the holding of abandonment and remail the Office action. That is, the reasoning of *Delgar* is applicable regardless of whether an application is held abandoned for failure to timely pay the issue fee (35 U.S.C. 151) or for failure to prosecute (35 U.S.C. 133).

To minimize costs and burdens to practitioners and the Office, the Office has modified the showing required to establish nonreceipt of an Office action. The showing required to establish nonreceipt of an Office communication must include a statement from the practitioner **>describing the system used for recording an Office action received at the correspondence address of record with the USPTO. The statement should establish that the docketing system is sufficiently reliable. It is expected that the record would include, but not be limited to, the application number, attorney docket number, the mail date of the Office action and the due date for the response.

Practitioner must state that the Office action was not received at the correspondence address of record, and that a search of the practitioner's record(s), including any file jacket or the equivalent, and the application contents, indicates that the Office action was not received. A copy of the record(s) used by the practitioner where the non-received Office action would have been entered had it been received is required.

A copy of the practitioner's record(s) required to show non-receipt of the Office action should include the master docket for the firm. That is, if a three month period for reply was set in the nonreceived Office action, a copy of the master docket report showing all replies docketed for a date three months from the mail date of the nonreceived Office action must be submitted as documentary proof of nonreceipt of the Office action. If no such master docket exists, the practitioner should so state and provide other evidence such as, but not limited to, the following: the application file jacket; incoming mail log; calendar; reminder system; or the individual docket record for the application in question.<

Petitioner presents no averment in support of the renewed petition under 37 C.F.R. §1.181, and no documentary evidence in support thereof.

As to the Allegations
of Unintentional Delay

The requirements of a grantable petition pursuant to 37 C.F.R. §1.137(b) are the petition and fee therefor, a reply, a proper statement of unintentional delay under the regulation, and, where

---

The showing outlined above may not be sufficient if there are circumstances that point to a conclusion that the Office action may have been lost after receipt rather than a conclusion that the Office action was lost in the mail (e.g., if the practitioner has a history of not receiving Office actions).

Evidence of nonreceipt of an Office communication or action (e.g., Notice of Abandonment or an advisory action) other than that action to which reply was required to avoid abandonment would not warrant withdrawal of the holding of abandonment. Abandonment takes place by operation of law for failure to reply to an Office action or timely pay the issue fee, not by operation of the mailing of a Notice of Abandonment. See *Lorenz v. Finkl*, 333 F.2d 885, 889-90, 142 USPQ 26, 29-30 (CCPA 1964); *Krahn v. Commissioner*, 15 USPQ2d 1823, 1824 (E.D. Va 1990); *In re Application of Fischer*, 6 USPQ2d 1573, 1574 (Comm'r Pat. 1988).

B. Petition To Withdraw Holding of Abandonment Based on Evidence That a Reply Was Timely Mailed or Filed

37 C.F.R. 1.10(c) through 1.10(e) and 1.10(g) set forth procedures for petitioning the Director of the USPTO to accord a filing date to correspondence as of the date of deposit of the correspondence as "Express Mail." A petition to withdraw the holding of abandonment relying upon a timely reply placed in "Express Mail" must include an appropriate petition under 37 C.F.R. 1.10(c), (d), (e), or (g) (see MPEP § 513). When a paper is shown to have been mailed to the Office using the "Express Mail" procedures, the paper must be entered in PALM with the "Express Mail" date.

Similarly, applicants may establish that a reply was filed with a postcard receipt that properly identifies the reply and provides *prima facie* evidence that the reply was timely filed. See MPEP § 503. For example, if the application has been held abandoned for failure to file a reply to a first Office action, and applicant has a postcard receipt showing that an amendment was timely filed in response to the Office action, then the holding of abandonment should be withdrawn upon the filing of a petition to withdraw the holding of abandonment. When the reply is shown to have been timely filed based on a postcard receipt, the reply must be entered into PALM using the date of receipt of the reply as shown on the post card receipt.

Where a certificate of mailing under 37 C.F.R. 1.8, but not a postcard receipt, is relied upon in a petition to withdraw the holding of abandonment, see 37 C.F.R. 1.8(b) and MPEP § 512. As stated in 37 C.F.R. 1.8(b)(3) the statement that attests to the previous timely mailing or transmission of the correspondence must be on a personal knowledge basis, or to the satisfaction of the Director of the USPTO. If the statement attesting to the previous timely mailing is not made by the person who signed the Certificate of Mailing (i.e., there is no personal knowledge basis), then the statement attesting to the previous timely mailing should include evidence that supports the conclusion that the correspondence was actually mailed (e.g., copies of a mailing log establishing that correspondence was mailed for that application). When the correspondence is shown to have been timely filed based on a certificate of mailing, the correspondence is entered into PALM with the actual date of receipt (i.e., the date that the duplicate copy of the papers was filed with the statement under 37 C.F.R. 1.8).

37 C.F.R. 1.8(b) also permits applicant to notify the Office of a previous mailing or transmission of correspondence and submit a statement under 37 C.F.R. 1.8(b)(3) accompanied by a duplicate copy of the correspondence when a reasonable amount of time (e.g., more than one month) has elapsed from the time of mailing or transmitting of the correspondence. Applicant does not have to wait until the application becomes abandoned before notifying the Office of the previous mailing or transmission of the correspondence. Applicant should check the private Patent Application Information Retrieval (PAIR) system for the status of the correspondence before notifying the Office. See MPEP §512.

C. Treatment of Untimely Petition To Withdraw Holding of Abandonment

37 C.F.R. 1.181(f) provides that, *inter alia*, except as otherwise provided, any petition not filed within 2 months from the action complained of may be dismissed as untimely. Therefore, any petition (under 37 C.F.R. 1.181) to withdraw the holding of abandonment not filed within 2 months of the mail date of a notice of abandonment (the action complained of) may be dismissed as untimely. 37 C.F.R. 1.181(f). Rather than dismiss an untimely petition to withdraw the holding of abandonment under 37 C.F.R. 1.181(f), the Office may require a terminal disclaimer as a condition of granting an untimely petition to withdraw the holding of abandonment.

*****

applicable, a terminal disclaimer and fee. (However, it does not appear that a terminal disclaimer and fee are due here.)

Petitioner's statement on page 1 of the petition authorizing the fee "for Petition to revive unintentionally abandoned application" suggests that Petitioner intends the paper to seek alternatively relief as a petition averring unintentional delay consistent with the regulations at 37 C.F.R. §1.137(b). The regulations at 37 C.F.R. §1.137(b)(3) require a statement that "the entire delay in filing the required reply from the due date for the reply until the filing of a grantable petition pursuant to 37 C.F.R. §1.137(b) was unintentional." **Since the statement appearing in the paper read herein as a petition varies from the language required by 37 C.F.R. §1.137(b)(3), the statement is being construed as the required statement. Petitioner must notify the Office if this is not a correct reading of the statement appearing in the petition.**

BACKGROUND

The record reflects as follows:

This application was held abandoned for Petitioner's failure to reply timely and properly (fees due) to the Notice of Allowance/Allowability and Fees Due mailed on 30 November, 2007, with reply due under a non-extendable deadline on or before 29 February, 2008.

The application went abandoned by operation of law after midnight 29 February, 2008.

The Office mailed the Notice of Abandonment on 10 March, 2008.

On 12 March, 2008, Petitioner filed the instant petition, asserting that the reply (fees due) was submitted via FAX on 19 February, 2008, with authority to charge fees to Deposit Account 50-2620, but that Petitioner failed to recognize until at least a day later that Petitioner had insufficient funds (it appears, only $82.00) at the time the authorization was given, and thereafter, Petitioner avers, he transferred additional and sufficient funds to the deposit account.

Notably, Petitioner then failed to reauthorize the Office to charge the fees due before the due date. The final date for payment came and went without that authorization, and the application went abandoned. Clearly, the Office sought to act on Petitioner's instructions, but the state of Petitioner's deposit account made that impossible. Thereafter, when Petitioner avers he replenished the account, Petitioner gave no new instructions to the Office to charge fees before the due date for those fees. Thus, Petitioner lacked on the first presentation of the petition a showing that Petitioner:

- replied timely and properly to the Office action in question—rather, it was Petitioner's failure to maintain sufficient funds in the deposit account against which to charge fees due when Petitioner gave that authorization (on 19 February, 2008); and
- re-authorized that charge after he avers he replenished the deposit account and before the application went abandoned by operation of law.

Thus, the original petition was dismissed on 20 June, 2008.

The instant petitions, filed on 23 and 24 July, 2008, seek relief under 37 C.F.R. §1.181, but makes no showing in that regard. Alternatively, Petitioner suggests a petition averring unintentional delay, and so pursuant to the regulations at 37 C.F.R. §1.137(b), but does not present the petition, *per se*. **Since the statement appearing in the paper read herein as a petition varies from the language required by 37 C.F.R. §1.137(b)(3), the statement is being construed as the required statement. Petitioner must notify the Office if this is not a correct reading of the statement appearing in the petition.**

In this latter regard, it is noted that Petitioner twice authorized fees due as the reply (Issue and Publication Fees), and, as a result of Petitioner's error those fees initially were twice charged. However, the Office since has corrected Petitioner's error and refunded the overpayment to Petitioner's deposit account. Thus, Petitioner's protestations as to this matter now are **moot**.

(While Petitioner may create her own forms, the risk inherent is that—as was the case here—Petitioner may fail to include, and so may so fail to satisfy, requisite elements under the regulation. Forms for petitions under 37 C.F.R. §1.137(a) or (b) averring unavoidable delay and unintentional delay, respectively, may be found at the Office website: www.uspto.gov .)

Out of an abundance of caution, Petitioners always are reminded that the filing of a petition under 37 C.F.R. §1.181 does not toll any periods that may be running any action by the Office and a petition seeking relief under the regulation must be filed within two (2) months of the act complained of (see: 37 C.F.R. §1.181(f)), and that those registered to practice and all others who make representations before the Office are reminded to inquire into the underlying facts of representations made to the Office and support averments with the appropriate documentation–since all owe to the Office the continuing duty to disclose.[2]

The availability of applications and application papers online to applicants/practitioners who diligently associate their Customer Number with the respective application(s) now provides an applicant/practitioner on-demand information as to events/transactions in an application.

STATUTES, REGULATIONS

Congress has authorized the Commissioner to "revive an application if the delay is shown to the satisfaction of the Commissioner to have been "unavoidable." 35 U.S.C. §133 (1994).

---

[2] See supplement of 17 June, 1999. The Patent and Trademark Office is relying on Petitioner's duty of candor and good faith and accepting a statement made by Petitioner. See Changes to Patent Practice and Procedure, 62 Fed. Reg. at 53160 and 53178, 1203 Off. Gaz. Pat. Office at 88 and 103 (responses to comments 64 and 109)(applicant obligated under 37 C.F.R. §10.18 to inquire into the underlying facts and circumstances when providing statements to the Patent and Trademark Office).

The regulations at 37 C.F.R. §1.137(a) and (b) set forth the requirements for a Petitioner to revive a previously unavoidably or unintentionally, respectively, abandoned application.[3],[4]

Allegations as to the Request to
Withdraw the Holding of Abandonment

The courts have determined the construct for properly supporting a petition seeking withdrawal of a holding of abandonment.[5] (See, also, the commentary at MPEP §711.03(c)(I)(A) and (B).)

And the regulation requires that relief be sought within two (2) months of the act complained of.

The petition fails to satisfy the above-stated requirements in that Petitioner failed make the showing required.

(*See* MPEP § 711.03(c) under subheading "Petition to Withdraw Holding of Abandonment Based on Failure to Receive Office Action," alternative "A Reply Was Timely Filed"; see also: "Withdrawing the Holding of Abandonment When Office Actions Are Not Received," 1156 Official Gazette 53 (November 16, 1993).)

As to the Allegations
of Unintentional Delay

The requirements of a grantable petition pursuant to 37 C.F.R. §1.137(b) are the petition and fee therefor, a reply, a proper statement of unintentional delay under the regulation, and, where applicable, a terminal disclaimer and fee. (However, it does not appear that a terminal disclaimer and fee are due here.)

It appears that Petitioner has satisfied the requirements of the regulation.

---

[3] See: Changes to Patent Practice and Procedure; Final Rule Notice, 62 Fed. Reg. at 53158-59 (October 10, 1997), 1203 Off. Gaz. Pat. Office at 86-87 (October 21, 1997).

[4] The language of 35 U.S.C. §133 and 37 C.F.R. §1.137(a) is clear, unambiguous, and without qualification: the delay in tendering the reply to the outstanding Office action, as well as filing the first petition seeking revival, must have been unavoidable for the reply now to be accepted on petition. (Therefore, by example, an unavoidable delay in the payment of the Filing Fee might occur if a reply is shipped by the US Postal Service, but due to catastrophic accident, the delivery is not made.) Delays in responding properly raise the question whether delays are unavoidable. Where there is a question whether the delay was unavoidable, Petitioners must meet the burden of establishing that the delay was unavoidable within the meaning of 35 U.S.C. §133 and 37 C.F.R. §1.137(a) And the Petitioner must be diligent in attending to the matter. Failure to do so does not constitute the care required under Pratt, and so cannot satisfy the test for diligence and due care. (By contrast, unintentional delays are those that do not satisfy the very strict statutory and regulatory requirements of unavoidable delay, and also, by definition, are not intentional.))

[5] See: Delgar v. Schulyer, 172 USPQ 513 (D.D.C. 1971).

CONCLUSION

Accordingly, the petition under 37 C.F.R. §1.181is **dismissed**, however, the petition under 37 C.F.R. §1.137(b) is **granted**.

The instant application is released to Publications Branch to be processed into a patent in due course.

Petitioner may find it beneficial to view Private PAIR within a fortnight of the instant decision to ensure that the revival has been acknowledged by the Publications Branch in response to this decision. It is noted that all inquiries with regard to that change in status need be directed to the Publications Branch where that change of status must be effected—that does not occur in the Office of Petitions.

While telephone inquiries regarding this decision may be directed to the undersigned at (571) 272-3214, it is noted that all practice before the Office is in writing (see: 37 C.F.R. §1.2[6]) and the proper authority for action on any matter in this regard are the statutes (35 U.S.C.), regulations (37 C.F.R.) and the commentary on policy (MPEP). Therefore, no telephone discussion may be controlling or considered authority for Petitioner's action(s).

/John J. Gillon, Jr./
John J. Gillon, Jr.
Senior Attorney
Office of Petitions

[6] The regulations at 37 C.F.R. §1.2 provide:

§1.2 Business to be transacted in writing.

All business with the Patent and Trademark Office should be transacted in writing. The personal attendance of applicants or their attorneys or agents at the Patent and Trademark Office is unnecessary. The action of the Patent and Trademark Office will be based exclusively on the written record in the Office. No attention will be paid to any alleged oral promise, stipulation, or understanding in relation to which there is disagreement or doubt.

PTO/SB/64 (08-08)
Approved for use through 09/30/2008. OMB 0651-0031
U.S. Patent and Trademark Office; U.S. DEPARTMENT OF COMMERCE
Under the Paperwork Reduction Act of 1995, no persons are required to respond to a collection of information unless it displays a valid OMB control number.

PETITION FOR REVIVAL OF AN APPLICATION FOR PATENT ABANDONED UNINTENTIONALLY UNDER 37 CFR 1.137(b)	Docket Number (Optional)

First named inventor:

Application No.: Art Unit:

Filed: Examiner:

Title:

Attention: Office of Petitions
Mail Stop Petition
Commissioner for Patents
P.O. Box 1450
Alexandria, VA 22313-1450
FAX (571) 273-8300

NOTE: If information or assistance is needed in completing this form, please contact Petitions Information at (571) 272-3282.

The above-identified application became abandoned for failure to file a timely and proper reply to a notice or action by the United States Patent and Trademark Office. The date of abandonment is the day after the expiration date of the period set for reply in the office notice or action plus an extensions of time actually obtained.

APPLICANT HEREBY PETITIONS FOR REVIVAL OF THIS APPLICATION

NOTE: A grantable petition requires the following items:
(1) Petition fee;
(2) Reply and/or issue fee;
(3) Terminal disclaimer with disclaimer fee - required for all utility and plant applications filed before June 8, 1995; and for all design applications; and
(4) Statement that the entire delay was unintentional.

1.Petition fee

☐ Small entity-fee $ _____ (37 CFR 1.17(m)). Applicant claims small entity status. See 37 CFR 1.27.

☐ Other than small entity – fee $ _____ (37 CFR 1.17(m))

2. Reply and/or fee

A. The reply and/or fee to the above-noted Office action in the form of _____(identify type of reply):

☐ has been filed previously on _____.
☐ is enclosed herewith.

B. The issue fee and publication fee (if applicable) of $ _____.

☐ has been paid previously on _____.
☐ is enclosed herewith.

This collection of information is required by 37 CFR 1.137(b). The information is required to obtain or retain a benefit by the public which is to file (and by the USPTO to process) an application. Confidentiality is governed by 35 U.S.C. 122 and 37 CFR 1.11 and 1.14. This collection is estimated to take 1.0 hour to complete, including gathering, preparing, and submitting the completed application form to the USPTO. Time will vary depending upon the individual case. Any comments on the amount of time you require to complete this form and/or suggestions for reducing this burden, should be sent to the Chief Information Officer, U.S. Patent and Trademark Office, U.S. Department of Commerce, P.O. Box 1450, Alexandria, VA 22313-1450. DO NOT SEND FEES OR COMPLETED FORMS TO THIS ADDRESS. **SEND TO: Mail Stop Petition, Commissioner for Patents, P.O. Box 1450, Alexandria, VA 22313-1450.**

If you need assistance in completing the form, call 1-800-PTO-9199 and select option 2.

3. Terminal disclaimer with disclaimer fee

☐ Since this utility/plant application was filed on or after June 8, 1995, no terminal disclaimer is required.

☐ A terminal disclaimer (and disclaimer fee (37 CFR 1.20(d)) of $ _____ for a small entity or $ _____ for other than a small entity) disclaiming the required period of time is enclosed herewith (see PTO/SB/63).

4. STATEMENT: The entire delay in filing the required reply from the due date for the required reply until the filing of a grantable petition under 37 CFR 1.137(b) was unintentional. [NOTE: The United States Patent and Trademark Office may require additional information if there is a question as to whether either the abandonment or the delay in filing a petition under 37 CFR 1.137(b) was unintentional (MPEP 711.03(c), subsections (III)(C) and (D)).]

WARNING:

Petitioner/applicant is cautioned to avoid submitting personal information in documents filed in a patent application that may contribute to identity theft. Personal information such as social security numbers, bank account numbers, or credit card numbers (other than a check or credit card authorization form PTO-2038 submitted for payment purposes) is never required by the USPTO to support a petition or an application. If this type of personal information is included in documents submitted to the USPTO, petitioners/applicants should consider redacting such personal information from the documents before submitting them to the USPTO. Petitioner/applicant is advised that the record of a patent application is available to the public after publication of the application (unless a non-publication request in compliance with 37 CFR 1.213(a) is made in the application) or issuance of a patent. Furthermore, the record from an abandoned application may also be available to the public if the application is referenced in a published application or an issued patent (see 37 CFR 1.14). Checks and credit card authorization forms PTO-2038 submitted for payment purposes are not retained in the application file and therefore are not publicly available.

_____ Signature	_____ Date
_____ Typed or printed name	_____ Registration Number, if applicable
_____ Address	_____ Telephone Number
_____ Address	

Enclosures: ☐ Fee Payment

☐ Reply

☐ Terminal Disclaimer Form

☐ Additional sheets containing statements establishing unintentional delay

☐ Other: _____

CERTIFICATE OF MAILING OR TRANSMISSION [37 CFR 1.8(a)]

I hereby certify that this correspondence is being:

☐ Deposited with the United States Postal Service on the date shown below with sufficient postage as first class mail in an envelope addressed to: Mail Stop Petition, Commissioner for Patents, P. O. Box 1450, Alexandria, VA 22313-1450.

☐ Transmitted by facsimile on the date shown below to the United States Patent and Trademark Office at (571) 273-8300.

_____ Date	_____ Signature
	_____ Typed or printed name of person signing certificate

Privacy Act Statement

The **Privacy Act of 1974 (P.L. 93-579)** requires that you be given certain information in connection with your submission of the attached form related to a patent application or patent. Accordingly, pursuant to the requirements of the Act, please be advised that: (1) the general authority for the collection of this information is 35 U.S.C. 2(b)(2); (2) furnishing of the information solicited is voluntary; and (3) the principal purpose for which the information is used by the U.S. Patent and Trademark Office is to process and/or examine your submission related to a patent application or patent. If you do not furnish the requested information, the U.S. Patent and Trademark Office may not be able to process and/or examine your submission, which may result in termination of proceedings or abandonment of the application or expiration of the patent.

The information provided by you in this form will be subject to the following routine uses:

1. The information on this form will be treated confidentially to the extent allowed under the Freedom of Information Act (5 U.S.C. 552) and the Privacy Act (5 U.S.C 552a). Records from this system of records may be disclosed to the Department of Justice to determine whether disclosure of these records is required by the Freedom of Information Act.
2. A record from this system of records may be disclosed, as a routine use, in the course of presenting evidence to a court, magistrate, or administrative tribunal, including disclosures to opposing counsel in the course of settlement negotiations.
3. A record in this system of records may be disclosed, as a routine use, to a Member of Congress submitting a request involving an individual, to whom the record pertains, when the individual has requested assistance from the Member with respect to the subject matter of the record.
4. A record in this system of records may be disclosed, as a routine use, to a contractor of the Agency having need for the information in order to perform a contract. Recipients of information shall be required to comply with the requirements of the Privacy Act of 1974, as amended, pursuant to 5 U.S.C. 552a(m).
5. A record related to an International Application filed under the Patent Cooperation Treaty in this system of records may be disclosed, as a routine use, to the International Bureau of the World Intellectual Property Organization, pursuant to the Patent Cooperation Treaty.
6. A record in this system of records may be disclosed, as a routine use, to another federal agency for purposes of National Security review (35 U.S.C. 181) and for review pursuant to the Atomic Energy Act (42 U.S.C. 218(c)).
7. A record from this system of records may be disclosed, as a routine use, to the Administrator, General Services, or his/her designee, during an inspection of records conducted by GSA as part of that agency's responsibility to recommend improvements in records management practices and programs, under authority of 44 U.S.C. 2904 and 2906. Such disclosure shall be made in accordance with the GSA regulations governing inspection of records for this purpose, and any other relevant (*i.e.*, GSA or Commerce) directive. Such disclosure shall not be used to make determinations about individuals.
8. A record from this system of records may be disclosed, as a routine use, to the public after either publication of the application pursuant to 35 U.S.C. 122(b) or issuance of a patent pursuant to 35 U.S.C. 151. Further, a record may be disclosed, subject to the limitations of 37 CFR 1.14, as a routine use, to the public if the record was filed in an application which became abandoned or in which the proceedings were terminated and which application is referenced by either a published application, an application open to public inspection or an issued patent.
9. A record from this system of records may be disclosed, as a routine use, to a Federal, State, or local law enforcement agency, if the USPTO becomes aware of a violation or potential violation of law or regulation.

UNITED STATES PATENT AND TRADEMARK OFFICE

Commissioner for Patents
United States Patent and Trademark Office
P.O. Box 1450
Alexandria, VA 22313-1450
www.uspto.gov

DORT INTELLECTUAL PROPERTY LEGAL GROUP P.C
BOX 66148
WASHINGTON DC, 20035

COPY MAILED

JAN 26 2005

OFFICE OF PETITIONS

In re Application of :
David Bogart Dort :
Application No. 10/710,856 : ON PETITION
Filed: August 8, 2004 :
Attorney Docket No. VRBA.P016A :

This is a decision on the petition filed November 29, 2004 requesting that the above-identified application retain the presently accorded a filing date of August 8, 2004, with Figure 12 as part of the original disclosure.

On August 8, 2004, the above-identified application was filed. On September 29, 2004, the Office of Initial Patent Examination mailed a "Notice of Omitted Items in a Nonprovisional Application" stating that the application had been accorded a filing date of August 8, 2004, however, figures 12 as described in the specification appeared to have been omitted. The notice allowed an extendable two-month period for reply beginning from the mailing date of the notice.

In response, on November 29, 2004, applicants filed the present petition in which it is alleged that a priority claim to provisional application 60/591,129 was included in the subject application's specification and that a review of the provisional application and the drawings of the subject application reveals that the Figure 12 was present on filing, but was inadvertently not labeled.

It is obvious from the petition that no drawings were actually missing on August 4, 2004. Rather, the figure in between Figures 11 and 13 was not labeled, but should have been labeled Figure 12. However, the notice of Omitted Items in Nonprovisional Application" was correct in stating that Figures 12 as described in the specification appeared to have been omitted. Therefore, the notice was properly mailed and will not be withdrawn.

The $130.00 petition fee will be charged to the deposit account designated in the petition because the present petition was not necessitated by any error on the part of the United States Patent and Trademark Office.

A preliminary amendment correcting the drawing label to reflect Figure 12" should be prior to the first action on the merits.

Accordingly, the petition is dismissed.

The application file is being returned to the Office of Initial Patent Examination for further processing with the presently accorded filing date of August 8, 2004, using the drawings as they were filed on that date.

Any inquiries related to this decision should be directed to Kenya A. McLaughlin at (571)272-3222.

Kenya A. McLaughlin
Petitions Attorney
Office of Petitions

UNITED STATES PATENT AND TRADEMARK OFFICE

COMMISSIONER FOR PATENTS
UNITED STATES PATENT AND TRADEMARK OFFICE
P.O. BOX 1450
ALEXANDRIA, VA 22313-1450
www.uspto.gov

TAYLOR RUSSELL & RUSSELL, P.C.
4807 SPICEWOOD SPRINGS ROAD
BUILDING TWO SUITE 250
AUSTIN TX 78759

COPY MAILED

FEB 25 2008

OFFICE OF PETITIONS

In re Application of
Hotchkiss, et al.
Application No. 10/710,866
Filed: August 9, 2004
Attorney Docket No. 800760

: DECISION ON PETITION
: UNDER 37 CFR 1.78(a)(3)

This is a decision on the petition under 37 CFR 1.78(a)(3), filed August 24, 2007, to accept an unintentionally delayed claim under 35 U.S.C. § 120 for the benefit of priority to the prior-filed nonprovisional applications set forth in the amendment filed with the petition.

The petition is **DISMISSED**.

A petition for acceptance of a claim for late priority under 37 CFR 1.78(a)(3) is only applicable to those applications filed on or after November 29, 2000. Further, the petition is appropriate only after the expiration of the period specified in 37 CFR 1.78(a)(2)(ii). In addition, the petition under 37 CFR 1.78(a)(3) must be accompanied by:

(1) the reference required by 35 U.S.C. § 120 and 37 CFR 1.78(a)(2)(i) of the prior-filed application, unless previously submitted;
(2) the surcharge set forth in § 1.17(t); and
(3) a statement that the entire delay between the date the claim was due under 37 CFR 1.78(a)(2)(ii) and the date the claim was filed was unintentional. The Director may require additional information where there is a question whether the delay was unintentional.

The petition does not satisfy item (1) above.

The reference to add the above-noted, prior-filed applications in the first sentence of the specification on page one following the title is not acceptable as drafted since it improperly incorporates by reference the prior-filed applications. An incorporation by reference statement added after an application's filing date is not effective because no new matter can be added to an application after its filing date (*see* 35 U.S.C. § 132(a)). If an incorporation by reference statement is included in an amendment to the specification to add a benefit claim under 35 U.S.C. § 120 after the filing date of the application, the amendment would not be proper. When a

benefit claim under 35 U.S.C. § 120 is submitted after the filing of an application, the reference to the prior application cannot include an incorporation by reference statement of the prior application. *See* Dart Industries v. Banner, 636 F.2d 684, 207 USPQ 273 (C.A.D.C. 1980). *Note* MPEP §§ 201.06(c) and 608.04(b).

If reconsideration of this decision is desired, a renewed petition under 37 CFR § 1.78(a)(3) and an Application Data Sheet or an amendment (complying with the provisions of 37 CFR 1.121 and 37 CFR 1.76(b)(5)) to correct the above matters are required.

Further correspondence with respect to this matter should be addressed as follows:

By mail: Mail Stop PETITIONS
Commissioner for Patents
Post Office Box 1450
Alexandria, VA 22313-1450

By hand: Customer Service Window
Mail Stop Petitions
Randolph Building
401 Dulany Street
Alexandria, VA 22314

By fax: (571) 273-8300
ATTN: Office of Petitions

Any questions concerning this matter may be directed to Petitions Attorney Alesia M. Brown at (571) 272-3205.

Anthony Knight
Supervisor
Office of Petitions

UNITED STATES PATENT AND TRADEMARK OFFICE

COMMISSIONER FOR PATENTS
UNITED STATES PATENT AND TRADEMARK OFFICE
P.O. BOX 1450
ALEXANDRIA, VA 22313-1450
www.uspto.gov

TAYLOR RUSSELL & RUSSELL, P.C.
4807 SPICEWOOD SPRINGS ROAD
BUILDING TWO SUITE 250
AUSTIN TX 78759

COPY MAILED
DEC 12 2008

In re Application of	:	
Hotchkiss, et al.	:	
Application No. 10/710,866	:	DECISION DISMISSING PETITION
Filed: August 9, 2004	:	UNDER 37 CFR 1.78(a)(3)
Attorney Docket No. 800760	:	

This is a decision on the petition under 37 CFR 1.78(a)(3), filed April 4, 2008, to accept an unintentionally delayed claim under 35 U.S.C. §120 for the benefit of priority to prior-filed nonprovisional Application No. 10/249,784, filed May 7, 2003.

The petition is **DISMISSED**.

A petition for acceptance of a claim for late priority under 37 CFR 1.78(a)(3) is only applicable to those applications filed on or after November 29, 2000 and after the expiration of the period specified in 37 CFR 1.78(a)(2)(ii). In addition, the petition under 37 CFR 1.78(a)(3) must be accompanied by:

(1) the reference required by 35 U.S.C. § 120 and 37 CFR 1.78(a)(2)(i) of the prior-filed application, unless previously submitted;
(2) the surcharge set forth in § 1.17(t); and
(3) a statement that the entire delay between the date the claim was due under 37 CFR 1.78(a)(2)(ii) and the date the claim was filed was unintentional. The Director may require additional information where there is a question whether the delay was unintentional.

The amendment as drafted is unacceptable and, therefore, is not considered a proper reference under 37 CFR 1.78(a)(2)(i). In this regard, the amendment is physically part of the petition and, as such, does not comply with 37 CFR 1.121, 1.52, or 1.4(c). Note that 37 CFR 1.121 states that amendments are made by filing a paper, in compliance with § 1.52, directing that specified amendments be made. The pertinent section of 37 CFR 1.52 states that the claim (in this case, the claim for priority), must commence on a separate physical sheet. 37 CFR 1.4(c) states that each distinct subject must be contained in a separate paper since different matters may be considered by different branches of the United States Patent and Trademark Office.

Before the petition can be granted, petitioner must submit a substitute amendment in compliance with the aforementioned rules, along with a renewed petition under 37 CFR 1.78(a)(3).[1]

Further correspondence with respect to this matter should be addressed as follows:

By mail: Mail Stop PETITIONS
Commissioner for Patents
Post Office Box 1450
Alexandria, VA 22313-1450

By hand: Customer Service Window
Mail Stop Petitions
Randolph Building
401 Dulany Street
Alexandria, VA 22314

By fax: (571) 273-8300
ATTN: Office of Petitions

Any questions concerning this matter may be directed to Alesia M. Brown, Petitions Attorney, at (571) 272-3205.

Anthony Knight
Supervisor
Office of Petitions

[1] The claim for priority may also be made in an Application Data Sheet in compliance with 37 CFR 1.121 and 37 CFR 1.76(b)(5).

UNITED STATES PATENT AND TRADEMARK OFFICE

COMMISSIONER FOR PATENTS
UNITED STATES PATENT AND TRADEMARK OFFICE
P.O. BOX 1450
ALEXANDRIA, VA 22313-1450
www.uspto.gov

MAILED

MAR 30 2009

OFFICE OF PETITIONS

TAYLOR RUSSELL & RUSSELL, P.C.
4807 SPICEWOOD SPRINGS ROAD
BUILDING TWO SUITE 250
AUSTIN TX 78759

In re Application of
Hotchkiss, et al.
Application No. 10/710,866
Filed: August 9, 2004
Attorney Docket No. 800760

: DECISION DISMISSING PETITION
: UNDER 37 CFR 1.78(a)(3)

This is a decision on the renewed petition under 37 CFR 1.78(a)(3), filed January 19, 2009, to accept an unintentionally delayed claim under 35 U.S.C. § 120 for the benefit of priority to the prior-filed nonprovisional applications set forth in the amendment filed with the petition.

The petition is **GRANTED**.

A petition for acceptance of a claim for late priority under 37 CFR 1.78(a)(3) is only applicable to those applications filed on or after November 29, 2000. Further, the petition is appropriate only after the expiration of the period specified in 37 CFR 1.78(a)(2)(ii). In addition, the petition under 37 CFR 1.78(a)(3) must be accompanied by:

(1) the reference required by 35 U.S.C. § 120 and 37 CFR 1.78(a)(2)(i) of the prior-filed application, unless previously submitted;
(2) the surcharge set forth in § 1.17(t); and
(3) a statement that the entire delay between the date the claim was due under 37 CFR 1.78(a)(2)(ii) and the date the claim was filed was unintentional. The Director may require additional information where there is a question whether the delay was unintentional.

All of the above requirements having been satisfied, the late claim for priority under 35 U.S.C. § 120 is accepted as being unintentionally delayed.

The granting of the petition to accept the delayed benefit claim to the prior-filed applications under 37 CFR 1.78(a)(3) should not be construed as meaning that this application is entitled to the benefit of the prior-filed applications. In order for this application to be entitled to the benefit of the prior-filed applications, all other requirements under 35 U.S.C. § 120 and 37 CFR 1.78(a)(1) and (a)(2) must be met. Similarly, the fact that the corrected Filing Receipt accompanying this decision on petition includes the prior-filed applications should not be

construed as meaning that applicant is entitled to the claim for benefit of priority to the prior-filed applications noted thereon. Accordingly, the examiner will, in due course, consider this benefit claim and determine whether the application is entitled to the benefit of the earlier filing date.

A corrected Filing Receipt, which includes the priority claim to the prior-filed nonprovisional applications, accompanies this decision on petition.

This application is being forwarded to Technology Center Art Unit 2168 for consideration by the examiner of applicant's entitlement to claim benefit of priority under 35 U.S.C. § 120 to the prior-filed applications.

Any questions concerning this matter may be directed to Alesia M. Brown, Petitions Attorney, at (571) 272-3205. All other inquiries concerning either the examination procedures or status of the application should be directed to the Technology Center.

Anthony Knight
Supervisor
Office of Petitions

UNITED STATES PATENT AND TRADEMARK OFFICE

UNITED STATES DEPARTMENT OF COMMERCE
United States Patent and Trademark Office
Address: COMMISSIONER FOR PATENTS
P.O. Box 1450
Alexandria, Virginia 22313-1450
www.uspto.gov

APPLICATION NUMBER	FILING or 371(c) DATE	GRP ART UNIT	FIL FEE REC'D	ATTY.DOCKET.NO	TOT CLAIMS	IND CLAIMS
10/710,866	08/09/2004	2168	590	800760	38	4

CONFIRMATION NO. 4865

CORRECTED FILING RECEIPT

23372
TAYLOR RUSSELL & RUSSELL, P.C.
4807 SPICEWOOD SPRINGS ROAD
BUILDING TWO SUITE 250
AUSTIN, TX 78759

OC000000035067068

Date Mailed: 03/18/2009

Receipt is acknowledged of this non-provisional patent application. The application will be taken up for examination in due course. Applicant will be notified as to the results of the examination. Any correspondence concerning the application must include the following identification information: the U.S. APPLICATION NUMBER, FILING DATE, NAME OF APPLICANT, and TITLE OF INVENTION. Fees transmitted by check or draft are subject to collection. Please verify the accuracy of the data presented on this receipt. **If an error is noted on this Filing Receipt, please submit a written request for a Filing Receipt Correction. Please provide a copy of this Filing Receipt with the changes noted thereon. If you received a "Notice to File Missing Parts" for this application, please submit any corrections to this Filing Receipt with your reply to the Notice. When the USPTO processes the reply to the Notice, the USPTO will generate another Filing Receipt incorporating the requested corrections**

Applicant(s)

Lynette I. Hotchkiss, Lake Forest, CA;
Timothy T. Green, Residence Not Provided;
Angela Cheek, Residence Not Provided;

Power of Attorney:
Douglas Russell--40152

Domestic Priority data as claimed by applicant

This application is a CIP of 10/249,784 05/07/2003

Foreign Applications

If Required, Foreign Filing License Granted: 09/16/2004

The country code and number of your priority application, to be used for filing abroad under the Paris Convention, is **US 10/710,866**

Projected Publication Date: Not Applicable

Non-Publication Request: No

Early Publication Request: No
**** SMALL ENTITY ****

Title

System and Method for Regulatory Rules Repository Generation and Maintenance

Preliminary Class

707

PROTECTING YOUR INVENTION OUTSIDE THE UNITED STATES

Since the rights granted by a U.S. patent extend only throughout the territory of the United States and have no effect in a foreign country, an inventor who wishes patent protection in another country must apply for a patent in a specific country or in regional patent offices. Applicants may wish to consider the filing of an international application under the Patent Cooperation Treaty (PCT). An international (PCT) application generally has the same effect as a regular national patent application in each PCT-member country. The PCT process **simplifies** the filing of patent applications on the same invention in member countries, but **does not result** in a grant of "an international patent" and does not eliminate the need of applicants to file additional documents and fees in countries where patent protection is desired.

Almost every country has its own patent law, and a person desiring a patent in a particular country must make an application for patent in that country in accordance with its particular laws. Since the laws of many countries differ in various respects from the patent law of the United States, applicants are advised to seek guidance from specific foreign countries to ensure that patent rights are not lost prematurely.

Applicants also are advised that in the case of inventions made in the United States, the Director of the USPTO must issue a license before applicants can apply for a patent in a foreign country. The filing of a U.S. patent application serves as a request for a foreign filing license. The application's filing receipt contains further information and guidance as to the status of applicant's license for foreign filing.

Applicants may wish to consult the USPTO booklet, "General Information Concerning Patents" (specifically, the section entitled "Treaties and Foreign Patents") for more information on timeframes and deadlines for filing foreign patent applications. The guide is available either by contacting the USPTO Contact Center at 800-786-9199, or it can be viewed on the USPTO website at http://www.uspto.gov/web/offices/pac/doc/general/index.html.

For information on preventing theft of your intellectual property (patents, trademarks and copyrights), you may wish to consult the U.S. Government website, http://www.stopfakes.gov. Part of a Department of Commerce initiative, this website includes self-help "toolkits" giving innovators guidance on how to protect intellectual property in specific countries such as China, Korea and Mexico. For questions regarding patent enforcement issues, applicants may call the U.S. Government hotline at 1-866-999-HALT (1-866-999-4158).

LICENSE FOR FOREIGN FILING UNDER

Title 35, United States Code, Section 184

Title 37, Code of Federal Regulations, 5.11 & 5.15

GRANTED

The applicant has been granted a license under 35 U.S.C. 184, if the phrase "IF REQUIRED, FOREIGN FILING LICENSE GRANTED" followed by a date appears on this form. Such licenses are issued in all applications where the conditions for issuance of a license have been met, regardless of whether or not a license may be required as

set forth in 37 CFR 5.15. The scope and limitations of this license are set forth in 37 CFR 5.15(a) unless an earlier license has been issued under 37 CFR 5.15(b). The license is subject to revocation upon written notification. The date indicated is the effective date of the license, unless an earlier license of similar scope has been granted under 37 CFR 5.13 or 5.14.

This license is to be retained by the licensee and may be used at any time on or after the effective date thereof unless it is revoked. This license is automatically transferred to any related applications(s) filed under 37 CFR 1.53(d). This license is not retroactive.

The grant of a license does not in any way lessen the responsibility of a licensee for the security of the subject matter as imposed by any Government contract or the provisions of existing laws relating to espionage and the national security or the export of technical data. Licensees should apprise themselves of current regulations especially with respect to certain countries, of other agencies, particularly the Office of Defense Trade Controls, Department of State (with respect to Arms, Munitions and Implements of War (22 CFR 121-128)); the Bureau of Industry and Security, Department of Commerce (15 CFR parts 730-774); the Office of Foreign AssetsControl, Department of Treasury (31 CFR Parts 500+) and the Department of Energy.

NOT GRANTED

No license under 35 U.S.C. 184 has been granted at this time, if the phrase "IF REQUIRED, FOREIGN FILING LICENSE GRANTED" DOES NOT appear on this form. Applicant may still petition for a license under 37 CFR 5.12, if a license is desired before the expiration of 6 months from the filing date of the application. If 6 months has lapsed from the filing date of this application and the licensee has not received any indication of a secrecy order under 35 U.S.C. 181, the licensee may foreign file the application pursuant to 37 CFR 5.15(b).

UNITED STATES PATENT AND TRADEMARK OFFICE

Commissioner for Patents
United States Patent and Trademark Office
P.O. Box 1450
Alexandria, VA 22313-1450
www.uspto.gov

NORTH AMERICA INTELLECTUAL PROPERTY CORPORATION
P.O. BOX 506
MERRIFIELD VA 22116

COPY MAILED

SEP 07 2007

OFFICE OF PETITIONS

In re Patent No. 7,248,319
Issued: July 24, 2007
Application of Meng-Chi Liou et al. :
Application No. 10/710,887 : ON PETITION
Filed: August 10, 2004 :
Attorney Docket Number: CPTP0002USA :

This is a decision on the petition under 37 CFR 1.182, filed, May 3, 2007, to change the name of inventor "Meng-Chi Liu " to –Meng-Chi Liou"--.

The petition is **GRANTED**.

Office records have been updated to reflect the inventor's change of name. However, although the petition was filed prior to payment of the issue fee and prior to the issuance of the patent but not acted on, the patent was issued with an incorrect name of the inventor.

As the petitioner initiated the correction to the inventors name with a supplemental Application Data Sheet and as the petition is grantable but due to USPTO error in not addressing the petition prior to issuance of the patent, in the interest of justice, the petition will be treated under 37 CFR 1.182 and a certificate of correction will issue with the correct name of the inventor.

Fees in the amount of $400.00 for the petition and $100.00 for the certificate of correction have been charged to deposit account no. 50-3105.

Inquiries concerning this decision should be directed to the undersigned at (571) 272-3212. Any questions concerning the issuance of a certificate of correction should be directed to the Certificates of Correction Branch at (703) 305-8309.

This matter is being referred to the Certificates of Correction Branch for issuance of a certificate of correction.

Patricia Faison-Ball
Senior Petitions Attorney
Office of Petitions

UNITED STATES PATENT AND TRADEMARK OFFICE

COMMISSIONER FOR PATENTS
UNITED STATES PATENT AND TRADEMARK OFFICE
P.O. BOX 1450
ALEXANDRIA, VA 22313-1450
www.uspto.gov

MALIN HALEY AND DIMAGGIO, PA
1936 S ANDREWS AVENUE
FORT LAUDERDALE FL 33316

COPY MAILED

MAY 17 2006

OFFICE OF PETITIONS

In re Application of :
Jennifer Fernandez :
Application No. 10/710,898 : DECISION ON PETITION
Filed: August 11, 2004 : TO WITHDRAW
Attorney Docket No. 10939.3801 : FROM RECORD
:

This is a decision on the Request to Withdraw as attorney or agent of record under 37 C.F.R. § 1.36(b), filed December 2, 2005.

The request is **APPROVED**.

A grantable request to withdraw as attorney/agent of record must be signed by every attorney/agent seeking to withdraw or contain a clear indication that one attorney is signing on behalf of another/others. A request to withdraw will not be approved unless at least 30 (thirty) days would remain between the date of approval and the later of the expiration date of a time to file a response or the expiration date of the maximum time period which can be extended under 37 C.F.R. § 1.136(a).

The request was signed by Barry L. Haley on behalf of himself and all the attorneys/agents associated with Customer No. 22235.

All attorneys/agents associated with Customer Number 22235 have been withdrawn.

Applicant is reminded that there is no attorney of record at this time.

The correspondence address of record remains unchanged. However, a copy of this decision is being mailed to the sole inventor at the address noted below. All future communications from the Office will be directed to correspondence address of record until otherwise properly notified by applicant.

There is an outstanding Office action mailed December 21, 2005 that requires a reply from the applicant.

Telephone inquiries concerning this decision should be directed to Sherry D. Brinkley at (571) 272-3204.

Sherry D. Brinkley
Petitions Examiner
Office of Petitions

Conferee: Amelia Au.

cc: JENNIFER FERNANDEZ
9802 N.W. 1ST COURT
PLANTATION, FL 33324

UNITED STATES PATENT AND TRADEMARK OFFICE

Commissioner for Patents
United States Patent and Trademark Office
P.O. Box 1450
Alexandria, VA 22313-1450
www.uspto.gov

FOSTER, SWIFT, COLLINS & SMITH, P.C.
313 SOUTH WASHINGTON SQUARE
LANSING MI 48933

COPY MAILED

MAR 12 2008

OFFICE OF PETITIONS

In re Application of :
HUMMEL, et al. :
Application No. 10/710,917 : DECISION ON PETITION
Filed: August 12, 2004 :
Attorney Docket No. **13234-00013** :

This is a decision on the petition under the unintentional provisions of 37 CFR 1.137(b), filed August 13, 2007, to revive the above-identified application.

The petition is **GRANTED.**

This application became abandoned for failure to timely pay the issue and publication fees on or before July 5, 2007, as required by the Notice of Allowance and Fee(s) Due, mailed April 5, 2007. Accordingly, the date of abandonment of this application is July 6, 2007.

The petition satisfies the requirements of 37 CFR 1.137(b) in that petitioner has supplied (1) the reply in the form of payment of the issue fee of $700 and the publication fee of $300, (2) the petition fee of $750; and (3) an adequate statement of unintentional delay.

Telephone inquiries concerning this decision should be directed to Monica A. Graves at (571) 272-7253.

This application is being referred to the Office of Data Management for processing into a patent.

Sherry D. Brinkley
Petitions Examiner
Office of Petitions

UNITED STATES PATENT AND TRADEMARK OFFICE

Commissioner for Patents
United States Patent and Trademark Office
P.O. Box 1450
Alexandria, VA 22313-1450
www.uspto.gov

ALBIHNS STOCKHOLM AB
Linnegatan 2
BOX 5581
SE-114 85 Stockholm SWEDEN

COPY MAILED

OCT 0 2 2006

OFFICE OF PETITIONS

In re Application of :
JIANG, et al. :
Application No. 10/710,937 : DECISION ON PETITION
Filed: August 13, 2004 : TO WITHDRAW
Attorney Docket No. 76966 : FROM RECORD
:

This is a decision on the Request to Withdraw as attorney or agent of record under 37 C.F.R. § 1.36(b), filed June 29, 2006.

The request is **NOT APPROVED** as moot.

A review of the file record indicates that the power of attorney to ALBIHNS STOCKHOLM AB has been revoked by the assignee of the patent application on August 22, 2006. Accordingly, the request to withdraw under 37 C.F.R. § 1.36(b) is moot.

All future communications from the Office will continue to be directed to the below-listed address until otherwise notified by applicant.

Telephone inquires concerning this decision should be directed to PatriciaVolpe at 571-272-6825.

for David Bucci
Petitions Examiner
Office of Petitions

cc: NIXON & VANDERHYE, PC
901 North Glebe Road, 11th Floor
Arlington, VA 22203

UNITED STATES PATENT AND TRADEMARK OFFICE

Commissioner for Patents
United States Patent and Trademark Office
P.O. Box 1450
Alexandria, VA 22313-1450
www.uspto.gov

FAEGRE & BENSON LLP
PATENT DOCKETING
2200 WELLS FARGO CENTER
90 SOUTH 7TH STREET
MINNEAPOLIS MN 55402-3901

COPY MAILED

JAN 11 2005

OFFICE OF PETITIONS

In re Application of :
David Allen :
Application No. 10,710,944 :
Filed: August 13, 2004 :
Attorney Docket No. 56578-308426 :

NOTICE

This is a notice regarding your request for acceptance of a fee deficiency submission under 37 CFR 1.28. On September 1, 1998, the Court of Appeals for the Federal Circuit held that 37 CFR 1.28(c) is the sole provision governing the time for correction of the erroneous payment of the issue fee as a small entity. **See DH Technology v. Synergystex International, Inc. 154 F.3d 1333, 47 USPQ2d 1865 (Fed. Cir. Sept. 1, 1998).**

The Office no longer investigates or rejects original or reissue applications under 37 CFR 1.56. **1098 Off. Gaz. Pat. Office 502 (January 3, 1989).** Therefore, nothing in this Notice is intended to imply that an investigation was done.

Your fee deficiency submission under 37 CFR 1.28 is hereby **ACCEPTED.**

This application no longer qualifies for small entity status. Accordingly, all future fees must be paid at the large entity rate.

Inquiries related to this communication should be directed to the undersigned at (571) 272-3208.

Karen Creasy
Petitions Examiner
Office of Petitions
Office of the Deputy Commissioner
for Patent Examination Policy

UNITED STATES PATENT AND TRADEMARK OFFICE

Commissioner for Patents
United States Patent and Trademark Office
P.O. Box 1450
Alexandria, VA22313-1450
www.uspto.gov

JJGJR: 08-07

Paper No: __

COPY MAILED

SEP 10 2007

OFFICE OF PETITIONS

HOFFMAN, WARNICK
& D'ALESSANDRO LLC
75 STATE ST
14TH FL
ALBANY NY 12207

In re Application of
Chudzik, et al.
Application No.: 10/710,947
Filing Date: 13 August, 2004
Attorney Docket No. FIS920040092US2

DECISION

This is a decision on the petition filed on 31 January, 2007,to withdraw the holding of abandonment and considered under 37 C.F.R. §1.181, alternatively to revive the application under 37 C.F.R. §1.137(b) as having been abandoned due to unintentional delay.

The Office regrets the delay in addressing this matter, however, the instant petition was presented to the attorneys in the Office of Petitions only at this writing.[1]

The petition as considered under 37 C.F.R. §1.181 is **GRANTED**; and the petition under 37 C.F.R. §1.137(b) is **DISMISSED**.

[1] NOTE: **Monitoring of the status of applications on PAIR can inform one's management of application responses and provide an indication when mailings of Office actions should be expected. Status Inquiries filed at three (3) or four (4) month intervals provide a demonstration of diligence and attention in supporting a petition seeking relief under 37 C.F.R. §1.181.**

NOTE: The record reflects that Petitioner filed into the papers that he avers were intended for the instant application, but were that were improvidently designated with an erroneous application number to another and unrelated file.

BACKGROUND

The record reflects that:

- Petitioner failed to reply timely and properly to the 23 May, 2006, non-final Office action, reply due absent an extension of time on or before 23 August, 2006;
- the application went abandoned by operation of law after midnight on 2 August, 2006;
- the Office mailed the Notice of Abandonment on 9 January, 2007;
- on 31 January, 2007, Petitioner filed the instant petition, and averred therein, *inter alia*, that he filed timely and properly a reply to the Office action in question, and provided a copy of the reply averred to have been filed over a 21 August, 2006, Certificate of FAX Transmission, albeit under the incorrect application number (09/710947), rather than the correct application number of the instant application (10/710947), and Petitioner evidences a FAX Confirmation dated 21 August, 2007 (misstated by Petitioner as 21 April, 2007 (Petition, page 2, ¶2)) received from the Office as to that filing

Notably, the availability of applications and application papers online to applicants/practitioners who diligently associate their Customer Number with the respective application(s) now provides an applicant/practitioner immediate and on-demand information as to events/transactions in an application. Thus, now if one wishes to know the progress in and/or status of an application or the accuracy of the data therein, one need only look at the file online.

Out of an abundance of caution, Petitioners always are reminded that the filing of a petition under 37 C.F.R. §1.181 does not toll any periods that may be running any action by the Office and a petition seeking relief under the regulation must be filed within two (2) months of the act complained of (see: 37 C.F.R. §1.181(f)); and those registered to practice *and* all others who make representations before the Office must inquire into the underlying facts of representations made to the Office and support averments with the appropriate documentation–since all owe to the Office the continuing duty to disclose.[2]

---

[2] See supplement of 17 June, 1999. The Patent and Trademark Office is relying on petitioner's duty of candor and good faith and accepting a statement made by Petitioner. See Changes to Patent Practice and Procedure, 62 Fed. Reg. at 53160 and 53178, 1203 Off. Gaz. Pat. Office at 88 and 103 (responses to comments 64 and 109)(applicant obligated under 37 C.F.R. §10.18 to inquire into the underlying facts and circumstances when providing statements to the Patent and Trademark Office).

STATUTES, REGULATIONS AND ANALYSIS

Congress has authorized the Commissioner to "revive an application if the delay is shown to the satisfaction of the Commissioner to have been "unavoidable." 35 U.S.C. §133 (1994).[3]

The regulations at 37 C.F.R. §1.137(a) and (b) set forth the requirements for a petitioner to revive a previously unavoidably or unintentionally, respectively, abandoned application under this congressional grant of authority. The language of 35 U.S.C. §133 and 37 C.F.R. §1.137(a) is clear, unambiguous, and without qualification: the delay in tendering the reply to the outstanding Office action, as well as filing the first petition seeking revival, must have been unavoidable for

---

Specifically, the regulations at 37 C.F.R. §10.18 provide:

§ 10.18 Signature and certificate for correspondence filed in the Patent and Trademark Office.
(a) For all documents filed in the Office in patent, trademark, and other non-patent matters, except for correspondence that is required to be signed by the applicant or party, each piece of correspondence filed by a practitioner in the Patent and Trademark Office must bear a signature by such practitioner complying with the provisions of §1.4(d), §1.4(e), or § 2.193(c)(1) of this chapter.
(b) By presenting to the Office (whether by signing, filing, submitting, or later advocating) any paper, the party presenting such paper, whether a practitioner or non-practitioner, is certifying that—

(1) All statements made therein of the party's own knowledge are true, all statements made therein on information and belief are believed to be true, and all statements made therein are made with the knowledge that whoever, in any matter within the jurisdiction of the Patent and Trademark Office, knowingly and willfully falsifies, conceals, or covers up by any trick, scheme, or device a material fact, or makes any false, fictitious or fraudulent statements or representations, or makes or uses any false writing or document knowing the same to contain any false, fictitious or fraudulent statement or entry, shall be subject to the penalties set forth under 18 U.S.C. 1001, and that violations of this paragraph may jeopardize the validity of the application or document, or the validity or enforceability of any patent, trademark registration, or certificate resulting therefrom; and

(2) To the best of the party's knowledge, information and belief, formed after an inquiry reasonable under the circumstances, that —

(i) The paper is not being presented for any improper purpose, such as to harass someone or to cause unnecessary delay or needless increase in the cost of prosecution before the Office;

(ii) The claims and other legal contentions therein are warranted by existing law or by a nonfrivolous argument for the extension, modification, or reversal of existing law or the establishment of new law;

(iii) The allegations and other factual contentions have evidentiary support or, if specifically so identified, are likely to have evidentiary support after a reasonable opportunity for further investigation or discovery; and

(iv) The denials of factual contentions are warranted on the evidence, or if specifically so identified, are reasonably based on a lack of information or belief.

(c) Violations of paragraph (b)(1) of this section by a practitioner or non-practitioner may jeopardize the validity of the application or document, or the validity or enforceability of any patent, trademark registration, or certificate resulting therefrom. Violations of any of paragraphs (b)(2)(i) through (iv) of this section are, after notice and reasonable opportunity to respond, subject to such sanctions as deemed appropriate by the Commissioner, or the Commissioner's designee, which may include, but are not limited to, any combination of —

(1) Holding certain facts to have been established;
(2) Returning papers;
(3) Precluding a party from filing a paper, or presenting or contesting an issue;
(4) Imposing a monetary sanction;
(5) Requiring a terminal disclaimer for the period of the delay; or
(6) Terminating the proceedings in the Patent and Trademark Office.

(d) Any practitioner violating the provisions of this section may also be subject to disciplinary action. See § 10.23(c)(15).
[Added 50 FR 5175, Feb. 6, 1985, effective Mar. 8, 1985; para. (a) revised, 58 FR 54494, Oct. 22, 1993, effective Nov. 22, 1993; paras. (a) & (b) revised, paras. (c) & (d) added, 62 FR 53131, Oct. 10, 1997, effective Dec. 1, 1997; para. (a) revised, 69 FR 56481, Sept. 21, 2004, effective Oct. 21, 2004]

[3] 35 U.S.C. §133 provides:
35 U.S.C. §133 Time for prosecuting application.
Upon failure of the applicant to prosecute the application within six months after any action therein, of which notice has been given or mailed to the applicant, or within such shorter time, not less than thirty days, as fixed by the Commissioner in such action, the application shall be regarded as abandoned by the parties thereto, unless it be shown to the satisfaction of the Commissioner that such delay was unavoidable.

the reply now to be accepted on petition.[4]

Delays in responding properly raise the question whether delays are unavoidable.[5] Where there is a question whether the delay was unavoidable, Petitioners must meet the burden of establishing that the delay was unavoidable within the meaning of 35 U.S.C. §133 and 37 C.F.R. §1.137(a).[6]

And the Petitioner must be diligent in attending to the matter.[7] Failure to do so does not constitute the care required under Pratt, and so cannot satisfy the test for diligence and due care.

(By contrast, unintentional delays are those that do not satisfy the very strict statutory and regulatory requirements of unavoidable delay, and also, by definition, are not intentional.[8]))

Allegations as to the Request to
Withdraw the Holding of Abandonment

The courts have determined the construct for properly supporting a petition seeking withdrawal of a holding of abandonment.[9]

The commentary at MPEP §711.03(c) provides:

* * *

> **B. Petition To Withdraw Holding of Abandonment Based on Evidence That a Reply Was Timely Mailed or Filed**
>
> 37 C.F.R. §1.10(c) through §1.10(e) and §1.10(g) set forth procedures for petitioning the Director of the USPTO to accord a filing date to correspondence as of the date of deposit of the

---

[4] Therefore, by example, an unavoidable delay in the payment of the Filing Fee might occur if a reply is shipped by the US Postal Service, but due to catastrophic accident, the delivery is not made.

[5] See: *Changes to Patent Practice and Procedure; Final Rule Notice*, 62 *Fed. Reg.* at 53158-59 (October 10, 1997), 1203 *Off. Gaz. Pat. Office* at 86-87 (October 21, 1997).

[6] See: In re Application of G, 11 USPQ2d 1378, 1380 (Comm'r Pats. 1989).

[7] See: Diligence in Filing Petitions to Revive and Petitions to Withdraw the Holding of Abandonment, 1124 Off. Gaz. Pat. Office 33 (March 19, 1991). It was and is Petitioner's burden to exercise diligence in seeking either to have the holding of abandonment withdrawn or the application revived. See 1124 Off. Gaz. Pat. Office supra.

[8] Therefore, by example, an unintentional delay in the reply might occur if the reply and transmittal form are to be prepared for shipment by the US Postal Service, but other pressing matters distract one's attention and the mail is not timely deposited for shipment.

[9] See: Delgar v. Schulyer, 172 USPQ 513 (D.D.C. 1971).

correspondence as "Express Mail." A petition to withdraw the holding of abandonment relying upon a timely reply placed in "Express Mail" must include an appropriate petition under 37 C.F.R. §1.10(c), (d), * (e), or (g) (see MPEP § 513). When a paper is shown to have been mailed to the Office using the "Express Mail" procedures, the paper must be entered in PALM with the "Express Mail" date.

Similarly, applicants may establish that a reply was filed with a postcard receipt that properly identifies the reply and provides *prima facie* evidence that the reply was timely filed. See MPEP § 503. For example, if the application has been held abandoned for failure to file a reply to a first Office action, and applicant has a postcard receipt showing that an amendment was timely filed in response to the Office action, then the holding of abandonment should be withdrawn upon the filing of a petition to withdraw the holding of abandonment. When the reply is shown to have been timely filed based on a postcard receipt, the reply must be entered into PALM using the date of receipt of the reply as shown on the post card receipt.

Where a certificate of mailing under 37 C.F.R. §1.8, but not a postcard receipt, is relied upon in a petition to withdraw the holding of abandonment, see 37 C.F.R. §1.8(b) and MPEP § 512. As stated in 37 C.F.R §1.8(b)(3) the statement that attests to the previous timely mailing or transmission of the correspondence must be on a personal knowledge basis, or to the satisfaction of the Director of the USPTO. If the statement attesting to the previous timely mailing is not made by the person who signed the Certificate of Mailing (i.e., there is no personal knowledge basis), then the statement attesting to the previous timely mailing should include evidence that supports the conclusion that the correspondence was actually mailed (e.g., copies of a mailing log establishing that correspondence was mailed for that application). When the correspondence is shown to have been timely filed based on a certificate of mailing, the correspondence is entered into PALM with the actual date of receipt (i.e., the date that the duplicate copy of the papers was filed with the statement under 37 C.F.R. §1.8).

37 C.F.R. §1.8(b) also permits applicant to notify the Office of a previous mailing or transmission of correspondence and submit a

> statement under 37 C.F.R. 1.8(b)(3) accompanied by a duplicate copy of the correspondence when a reasonable amount of time (e.g., more than one month) has elapsed from the time of mailing or transmitting of the correspondence. Applicant does not have to wait until the application becomes abandoned before notifying the Office of the previous mailing or transmission of the correspondence. Applicant should check the private Patent Application Information Retrieval (PAIR) system for the status of the correspondence before notifying the Office. See MPEP § 512.
>
> * * *

Moreover, the regulation places upon Petitioner a diligence requirement to seek relief within two (2) months of the act complained of.

It appears that Petitioner has satisfied the showing as discussed above.

As to the Allegations
of Unintentional Delay

The requirements for a grantable petition under 37 C.F.R. §1.137(b) are the petition and fee, a statement/showing of unintentional delay, a proper reply, and–where appropriate--a terminal disclaimer and fee if the application was filed before 8 June, 1995.

It appears that the matter is moot.

CONCLUSION

The petition as considered under 37 C.F.R. §1.181 is **granted**, and the 9 January, 2007, Notice of Abandonment is **vacated**; the petition under 37 C.F.R. §1.137(b) is **dismissed as moot** and the petition fee is refunded.

The instant application is released to Technology Center 2800 for further processing in due course.

While telephone inquiries regarding this decision may be directed to the undersigned at (571) 272-3214, it is noted that all practice before the Office is in writing (see: 37 C.F.R. §1.2[10]) and

---

[10] The regulations at 37 C.F.R. §1.2 provide:

§1.2 Business to be transacted in writing.

All business with the Patent and Trademark Office should be transacted in writing.The personal attendance of applicants or their attorneys or

the proper authority for action on any matter in this regard are the statutes (35 U.S.C.), regulations (37 C.F.R.) and the commentary on policy (MPEP). Therefore, no telephone discussion may be controlling or considered authority for Petitioner's action(s).

John J. Gillon, Jr.
Senior Attorney
Office of Petitions

---

agents at the Patent and Trademark Office is unnecessary. The action of the Patent and Trademark Office will be based exclusively on the written record in the Office. No attention will be paid to any alleged oral promise, stipulation,or understanding in relation to which there is disagreement or doubt.

UNITED STATES PATENT AND TRADEMARK OFFICE

Commissioner for Patents
United States Patent and Trademark Office
P.O. Box 1450
Alexandria, VA 22313-1450
www.uspto.gov

IBM CORPORATION (JSS)
C/O SCHUBERT OSTERRIEDER & NICKELSON PLLC
6013 CANNON MOUNTAIN DRIVE, S14
AUSTIN TX 78749

COPY MAILED

JUL 29 2008

OFFICE OF PETITIONS

In re Application of :
Scott L. **NIELSON, et al** :
Application No. 10/710,959 : ON PETITION
Filed: August 14, 2004 :
:

This is a decision on the petition under the unintentional provisions of 37 CFR 1.137(b), filed January 4, 2008, to revive the above-identified application.

The petition is **GRANTED**.

The above-identified application became abandoned for failure to reply in a timely manner to the non-final Office action mailed June 29, 2006, which set a shortened statutory period for reply of three (3) months. No extensions of time under the provisions of 37 CFR 1.136(a) were obtained. Accordingly, the above-identified application became abandoned on September 30, 2007.

The petition satisfies the requirements of 37 CFR 1.137(b) in that the petitioner has supplied (1) the reply in the form of an amendment and arguments/remarks, (2) the petition fee of $ 770, and (3) a proper statement of unintentional delay.

An extension of time under 37 CFR 1.136 must be filed prior to the expiration of the maximum extendable period for reply. *See* In re Application of S., 8 USPQ2d 1630, 1631 (Comm'r Pats. 1988). Since the $525 extension of time fee submitted with the petition on December 31, 2007 was subsequent to the maximum extendable period for reply, petitioner may request a refund of this fee by writing to the following address: Mail Stop 16, Commissioner for Patents, P. O. Box 1450, Alexandria, VA 22313-1450. A copy of this decision should accompany petitioner's request.

It is not apparent whether the person signing the statement of unintentional delay was in a position to have firsthand or direct knowledge of the facts and circumstances of the delay at issue. Nevertheless, such statement is being treated as having been made as the result of a reasonable inquiry into the facts and circumstances of such delay. See 37 CFR 10.18(b) and Changes to Patent Practice and Procedure; Final Rule Notice, 62 Fed. Reg. 53131, 53178 (October 10, 1997), 1203 Off. Gaz. Pat. Office 63, 103 (October 21, 1997). In the event that such an inquiry has not been made, petitioner must make such an inquiry. If such inquiry results in the discovery that it is not correct that the entire delay in filing the required reply from the due date for the reply until the filing of a grantable petition pursuant to 37 CFR 1.137(b) was unintentional, petitioner must notify the Office.

There is no indication that the person signing the petition was ever given a power of attorney to prosecute the application. If the person signing the petition desires to receive future correspondence regarding this application, the appropriate power of attorney document must be submitted. While a courtesy copy of this decision is being mailed to the person signing the petition, all future correspondence will be directed to the address currently of record until appropriate instructions are received.

Telephone inquiries concerning this decision should be directed to Lori Baker Amerson at (571) 272-6052.

The application file is being referred to Technology Center AU 2128 for appropriate action by the Examiner.

Christopher Bottiglia

for David Bucci
Petitions Examiner
Office of Petitions

Cc: Grant R. Clayton
Clayton, Howarth & Cannon, P.C.
P.O. Box 1909
Sandy, UT 84091

UNITED STATES PATENT AND TRADEMARK OFFICE

Commissioner for Patents
United States Patent and Trademark Office
P.O. Box 1450
Alexandria, VA 22313-1450
www.uspto.gov

IBM CORPORATION (JSS)
C/O SCHUBERT OSTERRIEDER & NICKELSON PLLC
6013 CANNON MOUNTAIN DRIVE, S14
AUSTIN TX 78749

COPY MAILED

JUL 2 9 2008

In re Application of
Scott L. **NIELSON, et al**
Application No. 10/710,959
Filed: August 14, 2004

ON PETITION

This is a decision on the petition under the unintentional provisions of 37 CFR 1.137(b), filed January 4, 2008, to revive the above-identified application.

The petition is **GRANTED**.

The above-identified application became abandoned for failure to reply in a timely manner to the non-final Office action mailed June 29, 2006, which set a shortened statutory period for reply of three (3) months. No extensions of time under the provisions of 37 CFR 1.136(a) were obtained. Accordingly, the above-identified application became abandoned on September 30, 2006.

The petition satisfies the requirements of 37 CFR 1.137(b) in that the petitioner has supplied (1) the reply in the form of an amendment and arguments/remarks, (2) the petition fee of $ 770, and (3) a proper statement of unintentional delay.

An extension of time under 37 CFR 1.136 must be filed prior to the expiration of the maximum extendable period for reply. *See* In re Application of S., 8 USPQ2d 1630, 1631 (Comm'r Pats. 1988). Since the $525 extension of time fee submitted with the petition on December 31, 2007 was subsequent to the maximum extendable period for reply, petitioner may request a refund of this fee by writing to the following address: Mail Stop 16, Commissioner for Patents, P. O. Box 1450, Alexandria, VA 22313-1450. A copy of this decision should accompany petitioner's request.

It is not apparent whether the person signing the statement of unintentional delay was in a position to have firsthand or direct knowledge of the facts and circumstances of the delay at issue. Nevertheless, such statement is being treated as having been made as the result of a reasonable inquiry into the facts and circumstances of such delay. See 37 CFR 10.18(b) and Changes to Patent Practice and Procedure; Final Rule Notice, 62 Fed. Reg. 53131, 53178 (October 10, 1997), 1203 Off. Gaz. Pat. Office 63, 103 (October 21, 1997). In the event that such an inquiry has not been made, petitioner must make such an inquiry. If such inquiry results in the discovery that it is not correct that the entire delay in filing the required reply from the due date for the reply until the filing of a grantable petition pursuant to 37 CFR 1.137(b) was unintentional, petitioner must notify the Office.

There is no indication that the person signing the petition was ever given a power of attorney to prosecute the application. If the person signing the petition desires to receive future correspondence regarding this application, the appropriate power of attorney document must be submitted. While a courtesy copy of this decision is being mailed to the person signing the petition, all future correspondence will be directed to the address currently of record until appropriate instructions are received.

Telephone inquiries concerning this decision should be directed to Lori Baker Amerson at (571) 272-6052 or in her absence the undersigned at 571-272-7099.

The application file is being referred to Technology Center AU 2128 for appropriate action by the Examiner.

for David Bucci
Petitions Examiner
Office of Petitions

Cc: Grant R. Clayton
Clayton, Howarth & Cannon, P.C.
P.O. Box 1909
Sandy, UT 84091

UNITED STATES PATENT AND TRADEMARK OFFICE

Commissioner for Patents
United States Patent and Trademark Office
P.O. Box 1450
Alexandria, VA 22313-1450
www.uspto.gov

WORKMAN NYDEGGER
60 EAST SOUTH TEMPLE
1000 EAGLE GATE TOWER
SALT LAKE CITY UT 84111

COPY MAILED
SEP 12 2008

In re Application of :
Scott L. Nielson et al. :
Application No. 10/710,961 : DECISION ON PETITION
Filed: August 15, 2004 :
Attorney Docket No. :

This is a decision on the petition under the unintentional provisions of 37 CFR 1.137(b), filed December 31, 2007, to revive the above-identified application.

The petition is **GRANTED**.

The above identified application became abandoned for failure to reply in a timely manner to the non-final Office action mailed June 28, 2006, which set a shortened statutory period for reply of three (3) months. No extensions of time under the provisions of 37 CFR 1.136(a) were obtained. Accordingly, the application became abandoned on September 29, 2006.

The petition satisfies the requirements of 37 CFR 1.137(b) in that petitioner has supplied (1) the reply in the form of an amendment, (2) the petition fee of $770 and (3) an adequate statement of unintentional delay.

37 CFR 1.137(b)(3) requires a statement that "the entire delay in filing the required reply from the due date for the reply until the filing of a grantable petition pursuant to 37 CFR 1.137(b) was unintentional." Since the statement appearing in the petition varies from the language required by 37 CFR 1.137(b)(3), the statement is being construed as the required statement. Petitioner must notify the Office if this is **not** a correct reading of the statement appearing in the petition.

An extension of time under 37 CFR 1.136 must be filed prior to the expiration of the maximum extendable period for reply. See In re Application of S., 8 USPQ2d 1630, 1631 (Comm'r Pats. 1988). Since the $525 extension of time fee submitted with the petition on December 31, 2007 was subsequent to the maximum extendable period for reply, this fee is unnecessary and will be credited to petitioner's deposit account.

It is not apparent whether the person signing the statement of unintentional delay was in a position to have firsthand or direct knowledge of the facts and circumstances of the delay at issue. Nevertheless, such statement is being treated as having been made as the result of a reasonable inquiry into the facts and circumstances of such delay. See 37 CFR 10.18(b) and Changes to Patent Practice and Procedure; Final Rule Notice, 62 Fed. Reg. 53131, 53178 (October 10, 1997), 1203 Off. Gaz. Pat. Office 63, 103 (October 21, 1997). In the event that such an inquiry has not been made, petitioner must make such an inquiry. If such inquiry results in the discovery that it is not correct that the entire delay in filing the required reply from the due date for the reply until the filing of a grantable petition pursuant to 37 CFR 1.137(b) was unintentional, petitioner must notify the Office.

There is no indication that the person signing the petition was ever given a power of attorney to prosecute the application. If the person signing the petition desires to receive future correspondence regarding this application, the appropriate power of attorney document must be submitted. While a courtesy copy of this decision is being mailed to the person signing the petition, all future correspondence will be directed to the address currently of record until appropriate instructions are received.

Telephone inquiries concerning this decision should be directed to Karin Reichle at (571) 272-6051.

This application is being referred to Technology Center AU 2128 for appropriate action by the Examiner in the normal course of business on the reply received December 31, 2007.

David Bucci
Petitions Examiner
Office of Petitions

Cc: Grant R. Clayton
Clayton Howarth & Cannon, PC
PO Box 1909
Sandy, Utah 84091-1909

UNITED STATES PATENT AND TRADEMARK OFFICE

Commissioner for Patents
United States Patent and Trademark Office
P.O. Box 1450
Alexandria, VA 22313-1450
www.uspto.gov

WORKMAN NYDEGGER
60 EAST SOUTH TEMPLE
1000 EAGLE GATE TOWER
SALT LAKE CITY, UT 84111

COPY MAILED

OCT 2 1 2008

OFFICE OF PETITIONS

In re Application of	:	
Scott L. NIELSON, et al	:	
Application No. 10/710,961	:	DECISION ON PETITION
Filed: August 14, 2004	:	TO WITHDRAW
Attorney Docket No. T11355.E	:	FROM RECORD
	:	

This is a decision on the Request to Withdraw as attorney or agent of record under 37 C.F.R. § 1.36(b), filed September 18, 2008.

The request is **NOT APPROVED** as moot.

A review of the file record indicates that the power of attorney to Workman Nydegger has been revoked by the assignee of the patent application on September 23, 2008. Accordingly, the request to withdraw under 37 C.F.R. § 1.36(b) is moot.

The correspondence address of record has been changed and the new correspondence address is the address indicated below.

Telephone inquires concerning this decision should be directed to undersigned at 571-272- 6735.

Diane Goodwyn
Petitions Examiner
Office of Petitions

cc: GRANT R. CLAYTON
CLAYTON HOWARTH & CANNON, PC
P.O. BOX 1909
SANDY, UT 84091-1909

UNITED STATES PATENT AND TRADEMARK OFFICE

Commissioner for Patents
United States Patent and Trademark Office
P.O. Box 1450
Alexandria, VA 22313-1450
www.uspto.gov

CLAUSEN MILLER, P.C
SUITE 1600
10S. LASALLE STREET
CHICAGO IL 60603

COPY MAILED

AUG 19 2009

OFFICE OF PETITIONS

In re Application of	:	
Weiss et al.	:	
Application No. 10/710,975	:	ON PETITION
Filed: August 16, 2004	:	
Attorney Docket No. FF2	:	

This is a decision on the petition under 37 C.F.R. § 1.137(b), filed May 20, 2009, to revive the above-identified application.

The petition is **GRANTED**.

The petition satisfies the requirements of 37 CFR 1.137(b) in that petitioner has supplied (1) the reply in the form of an Amendment, (2) the petition fee, and (3) a proper statement of unintentional delay.

Telephone inquiries concerning this decision should be directed to the undersigned at (571) 272-3206.

This matter is being referred to Technology Center AU 3764 for further examination on the merits.

Liana Walsh
Petitions Examiner
Office of Petitions

UNITED STATES PATENT AND TRADEMARK OFFICE

Commissioner for Patents
United States Patent and Trademark Office
P.O. Box 1450
Alexandria, VA 22313-1450
www.uspto.gov

SMITH HOPEN, PA
180 PINE AVENUE NORTH
OLDSMAR FL 34677

COPY MAILED

SEP 11 2008

In re Patent No. 7,255,800 :
Issued: August 14, 2007 :
Application No. 10/710,984 : ON PETITION
Filed: August 16, 2004 :
Attorney Docket No. 1372.187.PRC :

This is a decision on the petition under 37 CFR 1.182, filed, July 21, 2008, to change the name of inventor "Abdu Rub Abdur" to – Abdur Rub Abdur Rahman –.

The petition is **DISMISSED**.

The petition under 37 CFR 1.182 to change an inventor's name must include (1) an appropriate petition fee, (2) a statement signed by the inventor setting forth both names and (3) the procedure whereby the change of name was effected, or a copy of the court order.

Petitioner has failed to comply with (2) and (3).

Further, although petitioner did submit a Request for Certificate of Correction on October 9, 2007 in reference to the name change, the requisite $100.00 Certificate of Correction fee was not submitted.

In view of the above, the petition under § 1.182 cannot be granted at this time to change the inventor's name.

Further correspondence with respect to this matter should be addressed as follows:

By mail: Mail Stop PETITIONS
Commissioner for Patents
Post Office Box 1450
Alexandria, VA 22313-1450

By hand: Customer Window located at:
U.S. Patent and Trademark Office
Customer Service Window Randolph Building
401 Dulany Street
Alexandria, VA 22314

By fax: (571) 273-8300
ATTN: Office of Petitions

Any questions concerning this matter may be directed to the undersigned at (571) 272-3206.

Liana Walsh
Petitions Examiner
Office of Petitions

UNITED STATES PATENT AND TRADEMARK OFFICE

Commissioner for Patents
United States Patent and Trademark Office
P.O. Box 1450
Alexandria, VA 22313-1450
www.uspto.gov

SNELL & WILMER
400 EAST VAN BUREN
ONE ARIZONA CENTER
PHOENIX AZ 85004-2202

COPY MAILED
NOV 24 2006
OFFICE OF PETITIONS

In re Application of	:	
Kemmons A. Tubbs	:	
Application No. 10/710,989	:	NOTICE
Filed: August 16, 2004	:	
Attorney Docket No. 41821.0917	:	

This is in response to the petition under 37 CFR 1.28 filed by facsimile transmission on September 18, 2006, which is being treated as a Request under 37 CFR 1.27(c) seeking status as a small entity.

The statement claiming small entity status has been made of record and small entity status has been accorded. Therefore, the large entity issue fee payment of $1,400, filed June 16, 2006, will be reduced by half, leaving a refund of $700 to be credited to petitioner's deposit account, as authorized.

The application file is being referred to Files Repository.

Andrea Smith
Petitions Examiner
Office of Petitions

UNITED STATES PATENT AND TRADEMARK OFFICE

Commissioner for Patents
United States Patent and Trademark Office
P.O. Box 1450
Alexandria, VA 22313-1450
www.uspto.gov

COPY MAILED
NOV 24 2006
OFFICE OF PETITIONS

SNELL & WILMER
400 EAST VAN BUREN
ONE ARIZONA CENTER
PHOENIX AZ 85004-2202

In re Application of :
Kemmons A. Tubbs :
Application No. 10/710,990 : NOTICE
Filed: August 16, 2004 :
Attorney Docket No. 41821.0936 :

This is in response to the petition under 37 CFR 1.28 filed by facsimile transmission on September 18, 2006, which is being treated as a Request under 37 CFR 1.27(c) seeking status as a small entity.

The statement claiming small entity status has been made of record and small entity status has been accorded. Therefore, the large entity issue fee payment of $1,400, filed June 16, 2006, will be reduced by half, leaving a refund of $700 to be credited to petitioner's deposit account, as authorized.

The application file is being referred to Files Repository.

Andrea Smith
Petitions Examiner
Office of Petitions

UNITED STATES PATENT AND TRADEMARK OFFICE

Commissioner for Patents
United States Patent and Trademark Office
P.O. Box 1450
Alexandria, VA 22313-1450
www.uspto.gov

COPY MAILED
NOV 24 2006
OFFICE OF PETITIONS

SNELL & WILMER
400 EAST VAN BUREN
ONE ARIZONA CENTER
PHOENIX AZ 85004-2202

In re Application of	:	
Kemmons A. Tubbs	:	
Application No. 10/710,991	:	NOTICE
Filed: August 16, 2004	:	
Attorney Docket No. 41821.0937	:	

This is in response to the petition under 37 CFR 1.28 filed by facsimile transmission on September 18, 2006, which is being treated as a Request under 37 CFR 1.27(c) seeking status as a small entity.

The statement claiming small entity status has been made of record and small entity status has been accorded. Therefore, the large entity issue fee payment of $1,400, filed June 16, 2006, will be reduced by half, leaving a refund of $700 to be credited to petitioner's deposit account, as authorized.

The application file is being referred to Files Repository.

Andrea Smith
Petitions Examiner
Office of Petitions

UNITED STATES PATENT AND TRADEMARK OFFICE

Commissioner for Patents
United States Patent and Trademark Office
P.O. Box 1450
Alexandria, VA 22313-1450
www.uspto.gov

SNELL & WILMER L.L.P. (Main)
400 EAST VAN BUREN
ONE ARIZONA CENTER
PHOENIX AZ 85004-2202

COPY MAILED

MAY 10 2007

OFFICE OF PETITIONS

Patent No. 7,087,164 :
Issued: August 8, 2006 :
Application No. 10/710,993 : ON PETITION
Filed: August 16, 2004 :
Attorney Docket No. 41821.0938 :

This is in response to the paper filed September 18, 2006 captioned under 37 CFR 1.28 seeking status as a small entity and a refund of the excess issue fee paid as a large entity. The correspondence is being treated as a statement of small entity status and a refund request under 37 CFR 1.27(c).

The petition under 37 CFR 1.27(c) is **granted**.

The statement claiming small entity status of September 18, 2006 has been made of record and small entity status has been accorded.

Regarding the request for refund, petitioner has asserted small entity status and requested a refund of the excess amount paid as a large entity within three months of the date of the timely payment of the large entity fee. Therefore, the petition is granted. Deposit account no. 19-2814 will be credited the excess amount paid, or $700.00.

The application file is being returned to Files Repository.

Shirene Willis Brantley

Shirene Willis Brantley
Senior Petitions Attorney
Office of Petitions

UNITED STATES PATENT AND TRADEMARK OFFICE

Commissioner for Patents
United States Patent and Trademark Office
P.O. Box 1450
Alexandria, VA 22313-1450
www.uspto.gov

SNELL & WILMER L.L.P. (Main)
400 EAST VAN BUREN
ONE ARIZONA CENTER
PHOENIX AZ 85004-2202

COPY MAILED

APR 13 2007

OFFICE OF PETITIONS

Patent No. 7,087,165 :
Issued: August 8, 2006 :
Application No. 10/710,994 : ON PETITION
Filed: August 16, 2004 :
Attorney Docket No. 41821.0939 :

This is in response to the paper filed September 18, 2006 captioned under 37 CFR 1.28 seeking status as a small entity and a refund of the excess issue fee paid as a large entity. The correspondence is being treated as a statement of small entity status and a refund request under 37 CFR 1.27(c).

The petition under 37 CFR 1.27(c) is **granted**.

The statement claiming small entity status of September 18, 2006 has been made of record and small entity status has been accorded.

Regarding the request for refund, petitioner has asserted small entity status and requested a refund of the excess amount paid as a large entity within three months of the date of the timely payment of the large entity fee. Therefore, the petition is granted. Deposit account no. 19-2814 will be credited the excess amount paid, or $700.00.

The application file is being returned to Files Repository.

Shirene Willis Brantley

Shirene Willis Brantley
Senior Petitions Attorney
Office of Petitions

UNITED STATES PATENT AND TRADEMARK OFFICE

Commissioner for Patents
United States Patent and Trademark Office
P.O. Box 1450
Alexandria, VA 22313-1450
www.uspto.gov

TEXAS INSTRUMENTS INCORPORATED
P O BOX 655474, M/S 3999
DALLAS, TX 75265

COPY MAILED

NOV 13 2007

OFFICE OF PETITIONS

In re Application of :
Anand Shridhar Sawant, et al. :
Application No. 10/710,998 : DECISION ON PETITION
Filed: August 16, 2004 :
Attorney Docket No. TI-36864 :

This is a decision on the petition under the unintentional provisions of 37 CFR 1.137(b), filed June 29, 2007, to revive the above-identified application.

The petition is **GRANTED**.

The application became abandoned for failure to reply in a timely manner to the non-final Office action mailed, September 6, 2006, which set a shortened statutory period for reply of three (3) months. No extensions of time under the provisions of 37 CFR 1.136(a) were obtained. Accordingly, the application became abandoned on December 7, 2006.

The petition satisfies the requirements of 37 CFR 1.137(b) in that petitioner has supplied (1) the reply in the form of an amendment, (2) the petition fee of $1500, and (3) a proper statement of unintentional delay.

It is not apparent whether the person signing the statement of unintentional delay was in a position to have firsthand or direct knowledge of the facts and circumstances of the delay at issue. Nevertheless, such statement is being treated as having been made as the result of a reasonable inquiry into the facts and circumstances of such delay. See 37 CFR 10.18(b) and Changes to Patent Practice and Procedure; Final Rule Notice, 62 Fed. Reg. 53131, 53178 (October 10, 1997), 1203 Off. Gaz. Pat. Office 63, 103 (October 21, 1997). In the event that such an inquiry has not been made, petitioner must make such an inquiry. If such inquiry results in the discovery that it is not correct that the entire delay in filing the required reply from the due date for the reply until the filing of a grantable petition pursuant to 37 CFR 1.137(b) was unintentional, petitioner must notify the Office.

There is no indication that the person signing the petition was ever given a power of attorney to prosecute the application. If the person signing the petition desires to receive future correspondence regarding this application, the appropriate power of attorney document must be

submitted. While a courtesy copy of this decision is being mailed to the person signing the petition, all future correspondence will be directed to the address currently of record until appropriate instructions are received.

Telephone inquiries concerning this decision should be directed to undersigned (571) 272-1642.

This application is being referred to Technology Center AU 2168 for appropriate action by the Examiner in the normal course of business on the reply received June 29, 2007.

April M. Wise
Petitions Examiner
Office of Petitions

UNITED STATES PATENT AND TRADEMARK OFFICE

Commissioner for Patents
United States Patent and Trademark Office
P.O. Box 1450
Alexandria, VA 22313-1450
www.uspto.gov

AUG 19 2005

MALIN HALEY AND DIMAGGIO, PA
1936 S ANDREWS AVENUE
FORT LAUDERDALE FL 33316

In re Application of	:	
Jack Klootz	:	
Serial No.: 10/711,005	:	DECISION ON PETITION
Filed: August 17, 2004	:	
For: Led Illumination for Surgical Endoscopes and Industrial Rigid Boroscopes	:	

This is in response to applicants' petition filed October 14, 2004, to make the above-identified application special under the provisions of 37 CFR 1.102(c), based on the age of the applicant.

Applicant has satisfied the provisions set forth in M.P.E.P. 708.02, IV. Therefore the petition is **GRANTED**.

The application will be forwarded to the examiner for action on the merits commensurate with this decision.

Should there be any questions with regard to this letter please contact Frederick Schmidt by letter addressed to the Director, Technology Center 3700, P.O. Box 1450 Alexandria, VA 22313-1450, or by telephone at (571) 272-2975 or by facsimile transmission at (571) 273-8300.

Frederick R. Schmidt, Director
Technology Center 3700

UNITED STATES PATENT AND TRADEMARK OFFICE

Commissioner for Patents
United States Patent and Trademark Office
P.O. Box 1450
Alexandria, VA 22313-1450
www.uspto.gov

Paper No. 121304

MALIN HALEY AND DIMAGGIO, PA
1936 SOUTH ANDREWS AVENUE
FORT LAUDERDALE FL 33316

MAR 2 2 2005

In re Application of:	:	
KLOOTZ, JACK	:	DECISION ON PETITION
Serial No.: 10/711,006	:	TO MAKE SPECIAL
Filed: August 17, 2004	:	
Attorney Docket No.: **10885.3802**	:	

This is a decision on the petition under 37 C.F.R. § 1.102(c), filed October 14, 2004 to make the above-identified application special.

Petitioner requests that the above-identified application be made special under the accelerated examination procedure set forth in the Manual of Patent Examining Procedure (M.P.E.P.) § 708.02, Section IV: Applicant's Age.

A grantable petition to make special under 37 C.F.R. § 1.102, and in accordance with M.P.E.P. § 708.02, Section IV, must include evidence showing that the applicant is sixty five (65) years of age or more. No fee is required for this petition.

The petition includes a declaration from one of the co-inventors, Jack Klootz, stating that he is sixty-five (65) years of age or more.

Accordingly, the petition is GRANTED.

After allowance, this application will be given priority for printing. See M.P.E.P. § 1309.

Inquiries regarding this decision should be directed to Jose Dees at (571) 272-1569.

Jose Dees, Special Programs Examiner
Technology Center 2800
Semiconductors, Electrical and Optical
Systems and Components

UNITED STATES PATENT AND TRADEMARK OFFICE

Commissioner for Patents
United States Patent and Trademark Office
P.O. Box 1450
Alexandria, VA 22313-1450
www.uspto.gov

ERNEST A. BEUTLER,
ATTORNEY AT LAW
10 RUE MARSEILLE
NEWPORT BEACH CA 92660

COPY MAILED

MAY 0 2 2007

OFFICE OF PETITIONS

In re Application of :
Masaki Morimatsu :
Application No. 10/711,024 : ON PETITION
Filed: August 18, 2004 :
Attorney Docket No. SIMTEK6935 :

This is a decision on the petition, filed April 6, 2007, under 37 CFR 1.313(c)(3) to withdraw the above-identified application from issue after payment of the issue fee.

The petition is **GRANTED**.

The above-identified application is withdrawn from issue for express abandonment. See 37 CFR 1.313(c)(3).

The application is hereby withdrawn from issue, and the abandonment is hereby recognized.

Telephone inquiries should be directed to the undersigned at (571) 272-3208.

Karen Creasy
Petitions Examiner
Office of Petitions

UNITED STATES PATENT AND TRADEMARK OFFICE

UNITED STATES DEPARTMENT OF COMMERCE
United States Patent and Trademark Office
Address: COMMISSIONER FOR PATENTS
P.O. Box 1450
Alexandria, Virginia 22313-1450
www.uspto.gov

IBM CORPORATION
3039 CORNWALLIS RD.
DEPT. T81 / B503, PO BOX 12195
RESEARCH TRIANGLE PARK, NC 27709

Mail Date: 04/20/2010

Applicant	: Robert T. Uthe	: DECISION ON REQUEST FOR
Patent Number	: 7627682	: RECALCULATION of PATENT
Issue Date	: 12/01/2009	: TERM ADJUSTMENT IN VIEW
Appliction No	: 10/711,042	: OF WYETH AND NOTICE OF INTENT TO
Filed	: 08/19/2004	: ISSUE CERTIFICATE OF CORRECTION
		:

The Request for Recalculation is **GRANTED** to the extent indicated.

The patent term adjustment has been determined to be **1426** days. The USPTO will *sua sponte* issue a certificate of correction reflecting the amount of PTA days determined by the recalculation.

Prior to the issuance of the certificate of correction, the USPTO will afford patentee an opportunity to be heard and request reconsideration. Accordingly, patentee has **one month or thirty (30) days**, whichever is longer, to file a request for reconsideration of this patent term adjustment calculation. See 35 U.S.C. 154(b)(3)(B)(ii) and 37 CFR 1.322(a)(4). No extensions of time will be granted under 37 CFR 1.136.

Patentee should use document code PET.OP if electronically filing a request for reconsideration of this patent term adjustment calculation. The patentee must also include the information required by 37 CFR 1.705(b)(2) and the fee required by 37 CFR 1.18(e). If patentee does not file a timely request for reconsideration of this patent term adjustment calculation including the information required by 37 CFR 1.705(b)(2) and the fee required by 37 CFR 1.18(e), the USPTO will issue a certificate of correction reflecting the PTA determination noted above.

Patentee should be aware that in order to preserve the right to review in the United States District Court for the District of Columbia of the USPTO patent term adjustment determination, patentee must ensure that he or she also take the steps required under 35 U.S.C. 154(b)(4)(A) in a timely manner. Nothing in the request for recalculation should be construed as providing an alternative time frame for commencing a civil action under 35 U.S.C. 154(b)(4)(A).

Any questions concerning this decision should be directed to the Office of Patent Legal Administration at 571-272-7702.

UNITED STATES PATENT AND TRADEMARK OFFICE

UNITED STATES DEPARTMENT OF COMMERCE
United States Patent and Trademark Office
Address: COMMISSIONER FOR PATENTS
P.O. Box 1450
Alexandria, Virginia 22313-1450
www.uspto.gov

INTERNATIONAL BUSINESS MACHINES CORPORATION
DEPT. 18G
BLDG. 321-482
2070 ROUTE 52
HOPEWELL JUNCTION, NY 12533

Mail Date: 04/20/2010

Applicant	: Govindarajan Natarajan	: DECISION ON REQUEST FOR
Patent Number	: 7645423	: RECALCULATION of PATENT
Issue Date	: 01/12/2010	: TERM ADJUSTMENT IN VIEW
Appliction No	: 10/711,071	: OF WYETH AND NOTICE OF INTENT TO
Filed	: 08/20/2004	: ISSUE CERTIFICATE OF CORRECTION
		:

The Request for Recalculation is **GRANTED** to the extent indicated.

The patent term adjustment has been determined to be **1260** days. The USPTO will *sua sponte* issue a certificate of correction reflecting the amount of PTA days determined by the recalculation.

Prior to the issuance of the certificate of correction, the USPTO will afford patentee an opportunity to be heard and request reconsideration. Accordingly, patentee has **one month or thirty (30) days**, whichever is longer, to file a request for reconsideration of this patent term adjustment calculation. See 35 U.S.C. 154(b)(3)(B)(ii) and 37 CFR 1.322(a)(4). No extensions of time will be granted under 37 CFR 1.136.

Patentee should use document code PET.OP if electronically filing a request for reconsideration of this patent term adjustment calculation. The patentee must also include the information required by 37 CFR 1.705(b)(2) and the fee required by 37 CFR 1.18(e). If patentee does not file a timely request for reconsideration of this patent term adjustment calculation including the information required by 37 CFR 1.705(b)(2) and the fee required by 37 CFR 1.18(e), the USPTO will issue a certificate of correction reflecting the PTA determination noted above.

Patentee should be aware that in order to preserve the right to review in the United States District Court for the District of Columbia of the USPTO patent term adjustment determination, patentee must ensure that he or she also take the steps required under 35 U.S.C. 154(b)(4)(A) in a timely manner. Nothing in the request for recalculation should be construed as providing an alternative time frame for commencing a civil action under 35 U.S.C. 154(b)(4)(A).

Any questions concerning this decision should be directed to the Office of Patent Legal Administration at 571-272-7702.

UNITED STATES PATENT AND TRADEMARK OFFICE

Commissioner for Patents
United States Patent and Trademark Office
P.O. Box 1450
Alexandria, VA 22313-1450
www.uspto.gov

SHUMAKER LOOP
& KENDRICK
101 E. KENNEDY
SUITE 2800
TAMPA FL 33672-0609

COPY MAILED

SEP 18 2009

OFFICE OF PETITIONS

In re Application of :
Laghi :
Application No. 10/711,077 : DECISION
Filed: 20 August, 2004 :
Attorney Docket No. A34800-114077-59 :

This is a decision on the petition filed on 15 June, 2009, for revival of an application abandoned due to unintentional delay under 37 C.F.R. §1.137(b).

The petition under 37 C.F.R. §1.137(b) is **DISMISSED**.

Any further petition to revive must be submitted within TWO (2) MONTHS from the mail date of this decision. Extensions of time under 37 C.F.R. §1.136(a) are permitted. The reconsideration request should include a cover letter entitled "Renewed Petition under 37 C.F.R. §1.137(b)."

This is **not** a final agency action within the meaning of 5 U.S.C.§704.

As to the Allegations
of Unintentional Delay

The requirements of a grantable petition pursuant to 37 C.F.R. §1.137(b) are the petition and fee therefor, a reply, a proper statement of unintentional delay under the regulation, and, where applicable, a terminal disclaimer and fee. (However, it does not appear that a terminal disclaimer and fee are due here.)

Petitioner does not appear to have addressed satisfactorily the statement/showing-of-delay requirement under the rule. This deficiency must be overcome.

Petitioners' attentions always are directed to the guidance in the Commentary at MPEP §711.03(c)(II).

BACKGROUND

The record reflects as follows:

Petitioner failed to reply timely and properly to the non-final Office action mailed on 1 November, 2007, with reply due under absent an extension of time on or before 1 February, 2008.

The application went abandoned by operation of law after midnight 1 February, 2008.

The Office mailed the Notice of Abandonment 12 May, 2008.

On 15 June, 2009, Petitioner filed, *inter alia*, a petition (with fee) pursuant to 37 C.F.R. §1.137(b), with a reply in the form of an amendment and made the statement of unintentional delay.

(The request and fee for extension of time filed after expiration of the statutory period of reply are not proper. The fee will be refunded. Should Petitioner later find that the fee has not been refunded, Petitioner should file a request with the Office of Finance and submit with it a copy of this decision.)

It is not apparent whether the person signing the statement of unintentional delay was in a position to have firsthand or direct knowledge of the facts and circumstances of the delay at issue.[1] *In the event that such an inquiry has not been made, Petitioner* ***must*** *make such an inquiry.*

If such inquiry results in the discovery that it is not correct that the entire delay in filing the required reply from the due date for the reply until the filing of a grantable petition pursuant to 37 C.F.R. §1.137(b) was unintentional, Petitioner ***must*** *notify the Office.*

Petitioner provided no explanation for the extended period of abandonment—sixteen (16) months since abandonment and thirteen (13) months since Notice thereof. On any renewed petition, Petitioner (Applicant) must provide an explanation of the delay, with documentation in support thereof.

Again, Petitioners' attentions always are directed to the guidance in the Commentary at MPEP §711.03(c)(II).

The availability of applications and application papers online to applicants/practitioners who diligently associate their Customer Number with the respective application(s) now provides an applicant/practitioner on-demand information as to events/transactions in an application.

---

[1] See 37 C.F.R. §10.18(b) and Changes to Patent Practice and Procedure; Final Rule Notice, 62 Fed. Reg. 53131, 53178 (October 10, 1997), 1203 Off. Gaz. Pat. Office 63, 103 (October 21, 1997).

Out of an abundance of caution, Petitioners always are reminded that those registered to practice and all others who make representations before the Office **must** inquire into the underlying facts of representations made to the Office and support averments with the appropriate documentation–since all owe to the Office the continuing duty to disclose.[2]

STATUTES, REGULATIONS AND ANALYSIS

Congress has authorized the Commissioner to "revive an application if the delay is shown to the satisfaction of the Commissioner to have been "unavoidable." 35 U.S.C. §133 (1994).[3] The regulations at 37 C.F.R. §1.137(a) and (b) set forth the requirements for a Petitioner to revive a previously unavoidably or unintentionally, respectively, abandoned application under this congressional grant of authority.

Unintentional delays are those that do not satisfy the very strict statutory and regulatory requirements of unavoidable delay, and also, by definition, are not intentional.[4]))

As to Allegations of Unintentional Delay

As indicated above, the requirements of a grantable petition pursuant to 37 C.F.R. §1.137(b) are the petition and fee therefor, a proper reply, a proper statement and/or showing of unintentional delay under the regulation, and, where applicable, a terminal disclaimer and fee.

As discussed above, it does not appear that Petitioner has satisfied the statement/showing-of-delay requirement under the rule.

CONCLUSION

Accordingly, the petition under 37 C.F.R. §1.137(b) is **dismissed**.

Further correspondence with respect to this matter should be addressed as follows:

---

[2] See supplement of 17 June, 1999. The Patent and Trademark Office is relying on petitioner's duty of candor and good faith and accepting a statement made by Petitioner. See Changes to Patent Practice and Procedure, 62 Fed. Reg. at 53160 and 53178, 1203 Off. Gaz. Pat. Office at 88 and 103 (responses to comments 64 and 109)(applicant obligated under 37 C.F.R. §10.18 to inquire into the underlying facts and circumstances when providing statements to the Patent and Trademark Office).

[3] 35 U.S.C. §133 provides:

35 U.S.C. §133 Time for prosecuting application.

Upon failure of the applicant to prosecute the application within six months after any action therein, of which notice has been given or mailed to the applicant, or within such shorter time, not less than thirty days, as fixed by the Commissioner in such action, the application shall be regarded as abandoned by the parties thereto, unless it be shown to the satisfaction of the Commissioner that such delay was unavoidable.

[4] Therefore, by example, an unintentional delay in the reply might occur if the reply and transmittal form are to be prepared for shipment by the US Postal Service, but other pressing matters distract one's attention and the mail is not timely deposited for shipment.

By Mail: Mail Stop PETITION
Commissioner for Patents
P. O. Box 1450
Alexandria, VA 22313-1450

By hand: U. S. Patent and Trademark Office
Customer Service Window, Mail Stop Petitions
Randolph Building
401 Dulany Street
Alexandria, VA 22314

By facsimile: **(571) 273-8300**
Attn: Office of Petitions

Telephone inquiries regarding this decision may be directed to the undersigned at (571) 272-3214—it is noted, however, that all practice before the Office is in writing (see: 37 C.F.R. §1.2[5]) and the proper authority for action on any matter in this regard are the statutes (35 U.S.C.), regulations (37 C.F.R.) and the commentary on policy (MPEP). Therefore, no telephone discussion may be controlling or considered authority for Petitioner's action(s).

/John J. Gillon, Jr./
John J. Gillon, Jr.
Senior Attorney
Office of Petitions

[5] The regulations at 37 C.F.R. §1.2 provide:
§1.2 Business to be transacted in writing.
All business with the Patent and Trademark Office should be transacted in writing. The personal attendance of Petitioners or their attorneys or agents at the Patent and Trademark Office is unnecessary. The action of the Patent and Trademark Office will be based exclusively on the written record in the Office. No attention will be paid to any alleged oral promise, stipulation, or understanding in relation to which there is disagreement or doubt.

UNITED STATES PATENT AND TRADEMARK OFFICE

Commissioner for Patents
United States Patent and Trademark Office
P.O. Box 1450
Alexandria, VA 22313-1450
www.uspto.gov

SHUMAKER LOOP
& KENDRICK
101 E. KENNEDY
SUITE 2800
TAMPA FL 33672-0609

COPY MAILED

SEP 28 2009

OFFICE OF PETITIONS

In re Application of :
Laghi :
Application No. 10/711,077 : DECISION
Filed: 20 August, 2004 :
Attorney Docket No. A34800-114077-59 :

This is a decision on the petition filed on 25 September, 2009, for revival of an application abandoned due to unintentional delay under 37 C.F.R. §1.137(b).

The petition under 37 C.F.R. §1.137(b) is **GRANTED**.

As to the Allegations
of Unintentional Delay

The requirements of a grantable petition pursuant to 37 C.F.R. §1.137(b) are the petition and fee therefor, a reply, a proper statement of unintentional delay under the regulation, and, where applicable, a terminal disclaimer and fee. (However, it does not appear that a terminal disclaimer and fee are due here.)

Petitioners' attentions always are directed to the guidance in the Commentary at MPEP §711.03(c)(II).

BACKGROUND

The record reflects as follows:

Petitioner failed to reply timely and properly to the non-final Office action mailed on 1 November, 2007, with reply due under absent an extension of time on or before 1 February, 2008.

The application went abandoned by operation of law after midnight 1 February, 2008.

The Office mailed the Notice of Abandonment 12 May, 2008.

On 15 June, 2009, Petitioner filed, *inter alia*, a petition (with fee) pursuant to 37 C.F.R. §1.137(b), with a reply in the form of an amendment and made the statement of unintentional delay.[1] (The request and fee for extension of time filed after expiration of the statutory period of reply was not proper and was refunded.) Petitioner provided no explanation for the extended period of abandonment—sixteen (16) months since abandonment and thirteen (13) months since Notice thereof, and Petitioner was reminded that an explanation of the delay was required with any renewed petition. The petition was dismissed on 18 September, 2009.

On 25 September, 2009, Petitioner renewed the petition pursuant to 37 C.F.R. §1.137(b), and, having made a showing as to the history of the delay herein, completed submission as to the instant petition.

The record (including the petitions filed on 15 June and 25 September, 2009) does not necessitate a finding that the delay between midnight 1 February, 2008 (date of abandonment), and 25 September, 2009(date of filing of grantable petition), was not unintentional.

Rather, the Patent and Trademark Office is relying in this matter on the duty of candor and good faith of Petitioner (Laghi) and Counsel Robert S. Pippenger (Reg. No. 59,008) when accepting Petitioner's representation that the delay in filing the response was unintentional.[2]

The availability of applications and application papers online to applicants/practitioners who diligently associate their Customer Number with the respective application(s) now provides an applicant/practitioner on-demand information as to events/transactions in an application.

Out of an abundance of caution, Petitioners always are reminded that those registered to practice and all others who make representations before the Office **must** inquire into the underlying facts of representations made to the Office and support averments with the appropriate documentation–since all owe to the Office the continuing duty to disclose.[3]

---

[1] Petitioner was reminded that It was not apparent whether the person signing the statement of unintentional delay was in a position to have firsthand or direct knowledge of the facts and circumstances of the delay at issue; Petitioner **must** make such an inquiry; if such inquiry resulted in the discovery that it is not correct that the entire delay in filing the required reply from the due date for the reply until the filing of a grantable petition pursuant to 37 C.F.R. §1.137(b) was unintentional, Petitioner **must** notify the Office.

[2] See Changes to Patent Practice and Procedure, 62 Fed. Reg. at 53160 and 53178, 1203 Off. Gaz. Pat. Office at 88 and 103 (responses to comments 64 and 109)(applicant obligated under 37 C.F.R. §10.18 to inquire into the underlying facts and circumstances when providing the statement required by 37 C.F.R. §1.137(b) to the Patent and Trademark Office).

[3] See supplement of 17 June, 1999. The Patent and Trademark Office is relying on petitioner's duty of candor and good faith and accepting a statement made by Petitioner. See Changes to Patent Practice and Procedure, 62 Fed. Reg. at 53160 and 53178, 1203 Off. Gaz. Pat. Office at 88 and 103 (responses to comments 64 and 109)(applicant obligated under 37 C.F.R. §10.18 to inquire into the underlying facts and circumstances when providing statements to the Patent and Trademark Office).

STATUTES, REGULATIONS AND ANALYSIS

Congress has authorized the Commissioner to "revive an application if the delay is shown to the satisfaction of the Commissioner to have been "unavoidable." 35 U.S.C. §133 (1994).[4] The regulations at 37 C.F.R. §1.137(a) and (b) set forth the requirements for a Petitioner to revive a previously unavoidably or unintentionally, respectively, abandoned application under this congressional grant of authority.

Unintentional delays are those that do not satisfy the very strict statutory and regulatory requirements of unavoidable delay, and also, by definition, are not intentional.[5]))

As to Allegations of Unintentional Delay

The requirements of a grantable petition pursuant to 37 C.F.R. §1.137(b) are the petition and fee therefor, a reply, a proper statement of unintentional delay under the regulation, and, where applicable, a terminal disclaimer and fee.

It appears that the requirements under the rule have been satisfied.

CONCLUSION

Accordingly, the petition under 37 C.F.R. §1.137(b) is **granted**.

The instant application is released to the Technology Center/AU3751 for further processing in due course.

Petitioner may find it beneficial to view Private PAIR within a fortnight of the instant decision to ensure that the revival has been acknowledged by the TC/AU in response to this decision. It is noted that all inquiries with regard to that change in status need be directed to the TC/AU where that change of status must be effected—that does not occur in the Office of Petitions.

---

[4] 35 U.S.C. §133 provides:

35 U.S.C. §133 Time for prosecuting application.

Upon failure of the applicant to prosecute the application within six months after any action therein, of which notice has been given or mailed to the applicant, or within such shorter time, not less than thirty days, as fixed by the Commissioner in such action, the application shall be regarded as abandoned by the parties thereto, unless it be shown to the satisfaction of the Commissioner that such delay was unavoidable.

[5] Therefore, by example, an unintentional delay in the reply might occur if the reply and transmittal form are to be prepared for shipment by the US Postal Service, but other pressing matters distract one's attention and the mail is not timely deposited for shipment.

Telephone inquiries regarding this decision may be directed to the undersigned at (571) 272-3214—it is noted, however, that all practice before the Office is in writing (see: 37 C.F.R. §1.2[6]) and the proper authority for action on any matter in this regard are the statutes (35 U.S.C.), regulations (37 C.F.R.) and the commentary on policy (MPEP). Therefore, no telephone discussion may be controlling or considered authority for Petitioner's action(s).

/John J. Gillon, Jr./
John J. Gillon, Jr.
Senior Attorney
Office of Petitions

[6] The regulations at 37 C.F.R. §1.2 provide:

§1.2 Business to be transacted in writing.

All business with the Patent and Trademark Office should be transacted in writing. The personal attendance of applicants or their attorneys or agents at the Patent and Trademark Office is unnecessary. The action of the Patent and Trademark Office will be based exclusively on the written record in the Office. No attention will be paid to any alleged oral promise, stipulation, or understanding in relation to which there is disagreement or doubt.

UNITED STATES PATENT AND TRADEMARK OFFICE

Commissioner for Patents
United States Patent and Trademark Office
P.O. Box 1450
Alexandria, VA 22313-1450
www.uspto.gov

BENNETT JONES LLP
3400 ONE FIRST CANADIAN PLACE
PO BOX 130
TORONTO ON M5X 1A4 CA CANADA

COPY MAILED

MAR 2 0 2009

OFFICE OF PETITIONS

In re Application of	:	
Prince, Dennis Scott	:	
Application No. 10/711,081	:	ON PETITION
Filed: August 20, 2004	:	
Attorney Docket No. 56646-1	:	

This is a decision on the petition under 37 C.F.R. § 1.137(b), filed November 17, 2008, to revive the above-identified application.

The petition is **GRANTED**.

The petition satisfies the requirements of 37 CFR 1.137(b) in that petitioner has supplied (1) the reply in the form of a Substitute Specification, (2) the petition fee, and (3) a proper statement of unintentional delay.

Telephone inquiries concerning this decision should be directed to the undersigned at (571) 272-3206.

This matter is being referred to the Office of Data Processing for processing into a patent.

Liana Walsh
Petitions Examiner
Office of Petitions

UNITED STATES PATENT AND TRADEMARK OFFICE

Commissioner for Patents
United States Patent and Trademark Office
P.O. Box 1450
Alexandria, VA 22313-1450
www.uspto.gov

NOVAK DRUCE & QUIGG LLP
1300 EYE STREET NW
400 EAST TOWER
WASHINGTON DC 20005

COPY MAILED
AUG 17 2006
OFFICE OF PETITIONS

In re Application of :
Sabelstrom, et al. :
Application No. 10/711,088 : ON PETITION
Filed: August 20, 2004 :
Attorney Docket No. 7589.187.PCUS00 :

This is a decision on the petition to revive an abandoned application under 37 CFR 1.137(b), filed January 4, 2006

The petition under 37 CFR 1.137(b) is **GRANTED**.

The above-identified application became abandoned for failure to timely file a response to the non-final Office action mailed November 29, 2004, which set a shortened statutory period for reply of three (3) months. No extensions of time under 37 CFR 1.136(a) were purchased. Accordingly, no reply having received, the application became abandoned on March 1, 2005. A Notice of Abandonment was mailed on June 7, 2005.

With the instant petition, petitioner paid the petition fee, submitted the required reply in the form of an Amendment, and made the proper statement of unintentional delay.

The matter is being forwarded to Group Art Unit 3683 for consideration of the Amendment filed January 4, 2006.

Telephone inquiries related to this decision should be directed to the undersigned at (571)272-3207.

Cliff Congo
Petitions Attorney
Office of Petitions

UNITED STATES PATENT AND TRADEMARK OFFICE

Commissioner for Patents
United States Patent and Trademark Office
P.O. Box 1450
Alexandria, VA 22313-1450
www.uspto.gov

VALETNOIR INC - A NEW YORK CORPORATION
1140 BROADWAY
SUITE 903
NEW YORK, NY 10001

COPY MAILED

NOV 0 8 2005

OFFICE OF PETITIONS

In re Application of Nassef :
Application No. 10/711,106 : Decision on Petition
Filing Date: August 24, 2004 :
For: Method and Apparatus for :
Permitting the Self-Service ... :

This is a decision on the petition under 37 CFR 1.137(a), filed August 15, 2005, to revive the above-identified application.

The petition is **DISMISSED**.

Facts:

A Notice to File Corrected Papers was mailed on September 30, 2004.

The Notice required the submission of a substitute specification complying with 37 CFR 1.52, 1.121(b)(3) and 1.125. The Notice specifically stated the line spacing on the specification, claims, and abstract was not 1½ or double-spaced.

The Notice also required payment of $36 for the additional claims beyond 20.

The address of record is the address associated with customer number 43836.

Petitioner's Office relocated and the Notice was not received.

Since a reply to the Notice was not filed, the application became abandoned on December 31, 2004.

On an unknown date, petitioner filed a request to change the customer number. Petitioner states it was not processed in a timely manner.

Petitioner states a power of attorney has been filed on two different occasions. A copy of the power of attorney was not submitted with the petition. Petitioner should submit a copy of the power of attorney with any request for reconsideration or petition under 37 CFR 1.137(b).

A Notice of Abandonment was mailed on July 6, 2005.

Analysis:

A grantable petition under 37 CFR 1.137(a) must be accompanied by:

(1) the required reply,
(2) the petition fee,
(3) a showing to the satisfaction of the Commissioner that the entire delay in filing the required reply from the due date for the reply until the filing of a grantable petition pursuant to this paragraph was unavoidable, and
(4) a terminal disclaimer and fee *if* the application was filed on or before June 8, 1995 or *if* the application is a design application.

The instant petition lacks items (1) and (3).

As to item (1), the Notice required the submission of a corrected specification, claims, and abstract. A new specification has not been filed. The replacement claims and abstract fail to comply with 37 CFR 1.52, 1.121(b)(3) and 1.125. For example, the line spacing on the claims and abstract is greater than double-spaced.

Petitioner has failed to pay the fee for the extra claims as required by the Notice. The fee for extra claims was increased from $9 to $25 on December 8, 2004. Therefore, petitioner must either pay $25 for each of the 4 extra claims or file an amendment canceling claims.

As to item (3), the showing of record is not sufficient to establish to the satisfaction of the Commissioner that the delay was unavoidable within the meaning of 37 CFR 1.137(a). Petitioner has failed to state petitioner took reasonable and prudent steps to ensure the Office always had a correct address on file. Petitioner has failed to establish a proper request to change the address was filed prior to September 30, 2004.

Petitioner may wish to consider filing a petition to revive based on unintentional abandonment under 37 CFR 1.137(b). A grantable petition pursuant to 37 CFR 1.137(b) must be accompanied by the required reply (still must be submitted), the required petition fee ($750 for a small entity), and a statement that the **entire** delay in filing the required reply from the due date for the reply until the filing of a grantable petition pursuant to 37 CFR 1.137(b) was unintentional

Any request for reconsideration must be submitted within TWO (2) MONTHS from the mail date of this decision. No further petition fee is required for the request. Extensions of time under 37 CFR 1.136(a) are permitted. The reconsideration request should include a cover letter entitled "Renewed Petition under 37 CFR 1.137(a)."

Further correspondence with respect to this matter should be addressed as follows:

By mail: Mail Stop Petition
Commissioner for Patents
P.O. Box 1450
Alexandria, VA 22313-1450
By facsimile: (571) 273-8300

Attn: Office of Petitions

By hand: U.S. Patent and Trademark Office
Customer Service Window
Randolph Building
401 Dulany Street
Alexandria, VA 22314

Telephone inquiries regarding this communication should be directed to Petitions Attorney Steven Brantley at (571) 272-3203.

Charles Steven Brantley
Senior Petitions Attorney
Office of Petitions

cc: George J. Nassef Jr.
1140 Broadway, Suite 903
New York, NY 10001

UNITED STATES PATENT AND TRADEMARK OFFICE

Commissioner for Patents
United States Patent and Trademark Office
P.O. Box 1450
Alexandria, VA 22313-1450
www.uspto.gov

VALETNOIR INC - A NEW YORK CORPORATION
1140 BROADWAY
SUITE 903
NEW YORK, NY 10001

COPY MAILED

MAR 0 1 2006

OFFICE OF PETITIONS

In re Application of Nassef :
Application No. 10/711,106 :
Filing Date: August 24, 2004 :
For: Method and Apparatus for :
Permitting the Self-Service ... :

Decision on Petition

This is a decision on the petition under 37 CFR 1.137(b), filed November 25, 2005, to revive the above-identified application.

The petition is **DISMISSED**.

Facts:

A Notice to File Corrected Papers was mailed on September 30, 2004.

The Notice required the submission of a substitute specification complying with 37 CFR 1.52, 1.121(b)(3) and 1.125. The Notice specifically stated the line spacing on the specification, claims, and abstract was not 1½ or double-spaced.

Since a reply to the Notice was not filed, the application became abandoned on December 31, 2004.

A Notice of Abandonment was mailed on July 6, 2005.

Analysis:

A grantable petition under 37 CFR 1.137(b) must be accompanied by the required reply.

As to item (1), the Notice required the submission of a corrected specification, claims, and abstract.

A corrected specification has not been filed. Petitioner should submit a corrected specification.

The abstract contains over 300 words. 37 CFR 1.72(b) states, "The abstract ... may not exceed 150 words in length." A new abstract should be filed.

Any request for reconsideration must be submitted within TWO (2) MONTHS from the mail date of this decision. No further petition fee is required for the request. Extensions of time under 37 CFR 1.136(a) are permitted. The reconsideration request should include a cover letter entitled "Renewed Petition under 37 CFR 1.137(b)." This is **not** final agency action within the meaning of 5 U.S.C. § 704.

Further correspondence with respect to this matter should be addressed as follows:

By mail: Mail Stop Petition
Commissioner for Patents
P.O. Box 1450
Alexandria, VA 22313-1450

By facsimile: (571) 273-8300
Attn: Office of Petitions

By hand: U.S. Patent and Trademark Office
Customer Service Window
Randolph Building
401 Dulany Street
Alexandria, VA 22314

Telephone inquiries regarding this communication should be directed to Petitions Attorney Steven Brantley at (571) 272-3203.

Charles Steven Brantley
Senior Petitions Attorney
Office of Petitions

UNITED STATES PATENT AND TRADEMARK OFFICE

Commissioner for Patents
United States Patent and Trademark Office
P.O. Box 1450
Alexandria, VA 22313-1450
www.uspto.gov

VALETNOIR INC - A NEW YORK CORPORATION
1140 BROADWAY
SUITE 903
NEW YORK, NY 10001

COPY MAILED

NOV 0 8 2006

OFFICE OF PETITIONS

In re Application of Nassef :
Application No. 10/711,106 : Decision on Petition
Filing Date: August 24, 2004 :
For: Method and Apparatus for :
Permitting the Self-Service ... :

This is a decision on the petition under 37 CFR 1.137(b), filed July 31, 2006, to revive the above-identified application.

The petition is **granted**.

A Notice to File Corrected Papers was mailed on September 30, 2004.

The Notice required the submission of a substitute specification complying with 37 CFR 1.52, 1.121(b)(3) and 1.125. The Notice specifically stated the line spacing on the specification, claims, and abstract was not 1½ or double-spaced.

Since a reply to the Notice was not filed, the application became abandoned on December 31, 2004.

A Notice of Abandonment was mailed on July 6, 2005.

The instant petition requests revival of the application.

Petitioner has met the requirements to revive the above-identified application pursuant to 37 CFR 1.137(b). Therefore, the petition is granted and the application is revived.

The Office of Initial Patent Examination will be informed of the instant decision and will prepare the application for examination in due course.

Telephone inquiries regarding this communication should be directed to Petitions Attorney Steven Brantley at (571) 272-3203.

Charles Steven Brantley
Senior Petitions Attorney
Office of Petitions

UNITED STATES PATENT AND TRADEMARK OFFICE

UNITED STATES DEPARTMENT OF COMMERCE
United States Patent and Trademark Office
Address: COMMISSIONER FOR PATENTS
P.O. Box 1450
Alexandria, Virginia 22313-1450
www.uspto.gov

GENERAL ELECTRIC COMPANY
GLOBAL RESEARCH
ONE RESEARCH CIRCLE
BLDG. K1-3A59
NISKAYUNA, NY 12309

Mail Date: 06/25/2010

Applicant	: Charles Steven Korman	: DECISION ON REQUEST FOR
Patent Number	: 7642449	: RECALCULATION of PATENT
Issue Date	: 01/05/2010	: TERM ADJUSTMENT IN VIEW
Application No	: 10/711,107	: OF WYETH AND NOTICE OF INTENT TO
Filed	: 08/24/2004	: ISSUE CERTIFICATE OF CORRECTION
		:

The Request for Recalculation is **GRANTED** to the extent indicated.

The patent term adjustment has been determined to be **1190** days. The USPTO will *sua sponte* issue a certificate of correction reflecting the amount of PTA days determined by the recalculation.

Prior to the issuance of the certificate of correction, the USPTO will afford patentee an opportunity to be heard and request reconsideration. Accordingly, patentee has **one month or thirty (30) days**, whichever is longer, to file a request for reconsideration of this patent term adjustment calculation. See 35 U.S.C. 154(b)(3)(B)(ii) and 37 CFR 1.322(a)(4). No extensions of time will be granted under 37 CFR 1.136.

Patentee should use document code PET.OP if electronically filing a request for reconsideration of this patent term adjustment calculation. The patentee must also include the information required by 37 CFR 1.705(b)(2) and the fee required by 37 CFR 1.18(e). If patentee does not file a timely request for reconsideration of this patent term adjustment calculation including the information required by 37 CFR 1.705(b)(2) and the fee required by 37 CFR 1.18(e), the USPTO will issue a certificate of correction reflecting the PTA determination noted above.

Patentee should be aware that in order to preserve the right to review in the United States District Court for the District of Columbia of the USPTO patent term adjustment determination, patentee must ensure that he or she also take the steps required under 35 U.S.C. 154(b)(4)(A) in a timely manner. Nothing in the request for recalculation should be construed as providing an alternative time frame for commencing a civil action under 35 U.S.C. 154(b)(4)(A).

Any questions concerning this decision should be directed to the Office of Patent Legal Administration at 571-272-7702.

UNITED STATES PATENT AND TRADEMARK OFFICE

UNITED STATES DEPARTMENT OF COMMERCE
United States Patent and Trademark Office
Address: COMMISSIONER FOR PATENTS
P.O. Box 1450
Alexandria, Virginia 22313-1450
www.uspto.gov

MOORE & VAN ALLEN PLLC
P.O. BOX 13706
Research Triangle Park, NC 27709

Mail Date: 04/21/2010

Applicant	: Donald R. Moody	: DECISION ON REQUEST FOR
Patent Number	: 7617648	: RECALCULATION of PATENT
Issue Date	: 11/17/2009	: TERM ADJUSTMENT IN VIEW
Appliction No	: 10/711,118	: OF WYETH AND NOTICE OF INTENT TO
Filed	: 08/25/2004	: ISSUE CERTIFICATE OF CORRECTION
		:

The Request for Recalculation is **GRANTED** to the extent indicated.

The patent term adjustment has been determined to be **865** days. The USPTO will *sua sponte* issue a certificate of correction reflecting the amount of PTA days determined by the recalculation.

Prior to the issuance of the certificate of correction, the USPTO will afford patentee an opportunity to be heard and request reconsideration. Accordingly, patentee has **one month or thirty (30) days**, whichever is longer, to file a request for reconsideration of this patent term adjustment calculation. See 35 U.S.C. 154(b)(3)(B)(ii) and 37 CFR 1.322(a)(4). No extensions of time will be granted under 37 CFR 1.136.

Patentee should use document code PET.OP if electronically filing a request for reconsideration of this patent term adjustment calculation. The patentee must also include the information required by 37 CFR 1.705(b)(2) and the fee required by 37 CFR 1.18(e). If patentee does not file a timely request for reconsideration of this patent term adjustment calculation including the information required by 37 CFR 1.705(b)(2) and the fee required by 37 CFR 1.18(e), the USPTO will issue a certificate of correction reflecting the PTA determination noted above.

Patentee should be aware that in order to preserve the right to review in the United States District Court for the District of Columbia of the USPTO patent term adjustment determination, patentee must ensure that he or she also take the steps required under 35 U.S.C. 154(b)(4)(A) in a timely manner. Nothing in the request for recalculation should be construed as providing an alternative time frame for commencing a civil action under 35 U.S.C. 154(b)(4)(A).

Any questions concerning this decision should be directed to the Office of Patent Legal Administration at 571-272-7702.

UNITED STATES PATENT AND TRADEMARK OFFICE

COMMISSIONER FOR PATENTS
UNITED STATES PATENT AND TRADEMARK OFFICE
P.O. BOX 1450
ALEXANDRIA, VA 22313-1450
www.uspto.gov

WOOD, HERRON & EVANS, LLP (LEAR)
2700 CAREW TOWER
441 VINE STREET
CINCINNATI, OH 45202

COPY MAILED

JAN 0 5 2005

OFFICE OF PETITIONS

In re Application of	:
Radu, et al.	: DECISION GRANTING STATUS
Application No. 10/711,119	: UNDER 37 CFR 1.47(a)
Filed: August 25, 2004	:
Atty. Dkt. No.: MASL-47	:
For: AUTOMOTIVE HARDWARE	:
CARRIER AND METHOD OF MAKING	:
SAME	:

This decision is in response to the petition under 37 CFR 1.47(a), filed November 22, 2004.

The petition under 37 CFR 1.47(a) is **GRANTED**.

Petitioner has shown that inventor Bogdan Radu has refused to execute the declaration for the above-identified application after having been presented with the application papers.

The above-identified application and papers have been reviewed and found in compliance with 37 CFR 1.47(a). This application is hereby accorded Rule 1.47(a) status.

As provided in Rule 1.47(c), this Office will forward notice of this application's filing to the non-signing inventors at the addresses given in the petition. Notice of the filing of this application will also be published in the Official Gazette.

After this decision is mailed, the above-identified application will be returned to the Office of Initial Patent Examination for further processing.

Telephone inquiries regarding this decision should be directed to the undersigned at (571) 272-3205.

Alesia M. Brown
Petitions Attorney
Office of Petitions

UNITED STATES PATENT AND TRADEMARK OFFICE

COMMISSIONER FOR PATENTS
UNITED STATES PATENT AND TRADEMARK OFFICE
P.O. BOX 1450
ALEXANDRIA, VA 22313-1450
www.uspto.gov

Bogdan Radu
16011 Knollwood Drive
Dearborn, Michigan 48120

In re Application of :
Radu, et al. :
Application No. 10/711,119 : LETTER
Filed: August 25, 2004 :
Docket No.: MASL-47 :
For: AUTOMOTIVE HARDWARE :
CARRIER AND METHOD OF MAKING :
SAME :

COPY MAILED
JAN 0 5 2005
OFFICE OF PETITIONS

Dear Sir:

You are named as an inventor in the above-identified United States patent application filed under the provisions of 35 U.S.C. 116 (United States Code) and 37 C.F.R. § 1.47(a), Rules of Practice in Patent Cases. Should a patent be granted on the application you will be designated therein as a joint inventor.

As a named inventor you are entitled to inspect any paper in the file wrapper of the application, order copies of all or any part thereof (at a prepaid cost as per 37 C.F.R. § 1.19) or make your position of record in the application. Alternatively, you may arrange to do any of the preceding through a registered patent attorney or agent presenting written authorization from you. If you care to join the application, counsel of record (see below) would presumably assist you. Joining in the application would entail the filing of an appropriate oath or declaration by you pursuant to 37 C.F.R. § 1.63.

Telephone inquiries regarding this communication should be directed to the undersigned at (571) 272-3205. Requests for information regarding your application should be directed to the File Information Unit at (703) 308-2733. Information regarding how to pay for and order a copy of the application, or a specific paper in the application, should be directed to Certification Division at (703) 308-9726 or 1-800-972-6382 (outside the Washington D.C. area).

Telephone inquiries regarding this matter should be directed to the undersigned at (571) 272-3205.

Alesia M. Brown
Senior Petitions Attorney
Office of Petitions

UNITED STATES PATENT AND TRADEMARK OFFICE

Commissioner for Patents
United States Patent and Trademark Office
P.O. Box 1450
Alexandria, VA 22313-1450
www.uspto.gov

SMART INFORMATION FLOW TECHNOLOGIES
2119 OLIVER AVE SOUTH
MINNEAPOLIS MN 55405

COPY MAILED

MAY 18 2005

OFFICE OF PETITIONS

In re Application of :
Miller, et al. :
Application No. 10/711,126 : DECISION ON PETITION
Filed: August 25, 2004 :
Attorney Docket No. SIFT0305-01 :

This is a decision on the paper filed November 9, 2004, which is being treated as a request that the "Notice of Omitted Item(s) in a Nonprovisional Application" mailed September 29, 2004 be withdrawn.

The petition is **DISMISSED**.

Petitioner is given TWO MONTHS from the mailing date of this decision to reply, correcting the below-noted deficiencies. Any reply should be entitled "Request for Reconsideration Under 37 CFR 1.182," and should only address the deficiencies noted below, except that the reply may include an oath or declaration executed by the non-signing inventors. **Failure to respond will result in abandonment of the application.** Any extensions of time will be governed by 37 CFR 1.136(a).

The application was filed on August 25, 2004. However, on September 29, 2004, the Initial Patent Examination Division mailed a "Notice of Omitted Item(s) in a Nonprovional Application". The Notice informed applicant that the application had been accorded a filing date. However, Figures 7b and 7C as described in the specification appeared to have been omitted.

In response, inventor Harry Funk filed the present petition. Petitioner explains that Figures 7B and 7C were in fact missing on August 25, 2004 - more specifically, the specification erroneously contained a reference to these Figures. Applicant has submitted a substitute specification removing the reference to Figures 7B and 7C.

37 CFR 1.33 states that papers filed in a patent application must be signed by:

> (1) A registered attorney or agent of record appointed in compliance with § 1.34(b);
>
> (2) A registered attorney or agent not of record who acts in a representative capacity under the provisions of § 1.34(a);
>
> (3) An assignee as provided for under § 3.71(b) of this chapter; or
>
> (4) All of the applicants (§ 1.41(b)) for patent, unless there is an assignee of the entire interest and such assignee has taken action in the application in accordance with § 3.71 of this chapter.

Office records do not indicate that Harry Funk is an agent or attorney registered to practice before the Patent and Trademark Office.[1] In addition, Office records do not indicate that the assignee, SIFT, LLC., has taken action pursuant to § 3.71. The enclosed "Statement Under 37 CFR 3.73(b)" form should be completed by the assignee and returned on renewed petition.

Further correspondence with respect to this matter should be addressed as follows:

By mail: Mail Stop Petitions
Commissioner for Patents
P.O. Box 1450
Alexandria VA 22313-1450

By FAX: (703) 872-9306
Attn: Office of Petitions

Telephone inquiries concerning this decision may be directed to the undersigned at 571-272-3207.

Cliff Congo
Petitions Attorney
Office of Petitions

Enc: PTO/SB/96 (1 page)

---

[1] A transmittal letter submitted with the filing of the application indicates that Harry Funk has a "registered number" of 37198. As Mr. Funk is not registered as an agent or attorney before the Office, Mr. Funk does not possess a registration number. Assignee SIFT, LLC. is, however, associated with **customer number** 37198.

UNITED STATES PATENT AND TRADEMARK OFFICE

Commissioner for Patents
United States Patent and Trademark Office
P.O. Box 1450
Alexandria, VA 22313-1450
www.uspto.gov

SMART INFORMATION FLOW TECHNOLOGIES
2119 OLIVER AVE SOUTH
MINNEAPOLIS MN 55405

COPY MAILED

NOV 3 0 2006

OFFICE OF PETITIONS

In re Application of :
Miller, et al. :
Application No. 10/711,126 : DECISION ON PETITION
Filed: August 25, 2004 :
Attorney Docket No. SIFT0305-01 :

This is a decision on the paper filed July 15, 2005, which is being treated as a renewed request that the "Notice of Omitted Item(s) in a Nonprovisional Application" mailed September 29, 2004 be withdrawn.

The petition is **DISMISSED**.

The application was filed on August 25, 2004. However, on September 29, 2004, the Initial Patent Examination Division mailed a "Notice of Omitted Item(s) in a Nonprovional Application". The Notice informed applicant that the application had been accorded a filing date. However, Figures 7b and 7C as described in the specification appeared to have been omitted.

In response, inventor Harry Funk filed a petition on November 9, 2004. Petitioner explained that Figures 7B and 7C were in fact missing on August 25, 2004 - more specifically, the specification erroneously contained a reference to these Figures. Petitioner submitted a substitute specification removing the reference to Figures 7B and 7C. However, the petition was dismissed in a decision mailed on May 18, 2005, because the petition was not signed by all of the inventors, a registered attorney or agent, or an assignee.

On request for reconsideration, petitioner has submitted a proper 37 CFR 3.73(b) statement.

The matter is being forwarded to the Office of Initial Patent Examination for processing, using the application papers filed on August 25, 2004, and the substitute specification filed on November 9, 2004.

Telephone inquiries concerning this decision may be directed to the undersigned at 571-272-3207.

Cliff Congo
Petitions Attorney
Office of Petitions

UNITED STATES PATENT AND TRADEMARK OFFICE

Commissioner for Patents
United States Patent and Trademark Office
P.O. Box 1450
Alexandria, VA 22313-1450
www.uspto.gov

NOVAK DRUCE & QUIGG LLP
1300 EYE STREET NW
400 EAST TOWER
WASHINGTON DC 20005

COPY MAILED
AUG 18 2006
OFFICE OF PETITIONS

In re Application of :
Rydberg, et al. :
Application No. 10/711,146 : ON PETITION
Filed: August 27, 2004 :
Attorney Docket No. 7589.196.PCUS00 :

This is a decision on the petition to revive an abandoned application under 37 CFR 1.137(b), filed January 4, 2006

The petition under 37 CFR 1.137(b) is **GRANTED**.

The above-identified application became abandoned for failure to timely file a response to the non-final Office action mailed May 12, 2005, which set a shortened statutory period for reply of three (3) months. No extensions of time under 37 CFR 1.136(a) were purchased. Accordingly, no reply having received, the application became abandoned on August 13, 2005. A Notice of Abandonment was mailed on December 21, 2005.

With the instant petition, petitioner paid the petition fee, submitted the required reply in the form of an Amendment, and made the proper statement of unintentional delay.

The matter is being forwarded to Group Art Unit 3745 for consideration of the Amendment filed January 4, 2006.

Telephone inquiries related to this decision should be directed to the undersigned at (571)272-3207.

Cliff Congo
Petitions Attorney
Office of Petitions

UNITED STATES PATENT AND TRADEMARK OFFICE

Commissioner for Patents
United States Patent and Trademark Office
P.O. Box 1450
Alexandria, VA 22313-1450
www.uspto.gov

Malvern U. Griffin III
SUTHERLAND ASBILL & BRENNAN LLP
999 Peachtree Street, N.E.
Atlanta GA 30309-3996

COPY MAILED

JAN 27 2009

OFFICE OF PETITIONS

In re Application :
Wheeler et al. :
Application No. 10/711,149 : LETTER REGARDING
Filed: 08/27/2004 : PATENT TERM ADJUSTMENT
Attorney Docket No. 34250-016 :

This letter is in response to the "REQUEST FOR PATENT TERM ADJUSTMENT RECONSIDERATION" filed October 31, 2008. Applicants requests that the determination of patent term adjustment under 35 U.S.C. 154(b) be reviewed for accuracy.

The request for review of the determination of patent term adjustment (PTA) is **dismissed**.

On September 2, 2008, the Office mailed the Determination of Patent Term Adjustment under 35 U.S.C. 154(b) in the above-identified application. The Notice stated that the patent term adjustment to date is 833 days. On October 31, 2008, applicants submitted the instant comment.

Applicants state that they believe that the patent term adjustment should be zero days as the result of filing at least one terminal disclaimer during the prosecution of the above-identified application.

A review of the application history confirms that the patent term adjustment of 833 days (833 days of Office delay - 0 days of applicant delay) is correct.

It is noted that the filing of the terminal disclaimers on May 1, 2008, have no effect on the determination of patent term adjustment set forth on this application. It is true that 35 U.S.C. 154(b)(2)(B) provides that:

> No patent the term of which has been disclaimed beyond a specified date may be adjusted under this section beyond the expiration date specified in the disclaimer.

Moreover, 37 CFR 1.703(g) provides that:

> No patent, the term of which has been disclaimed beyond a specified date, shall be adjusted under § 1.702 and this section beyond the expiration date specified in the disclaimer.

However, the provisions of U.S.C. 154(b) for adjustment due to examination delay apply to original applications, other than designs, filed on or after May 29, 2000. The Office calculates patent term adjustment for examination delay in all eligible applications. In calculating the patent term adjustment, the Office does not differentiate between applications that have terminal disclaimers and those that do not. Nor does the Office undertake the burdensome task of reviewing every application with a terminal disclaimer to determine if the patent term adjustment accorded would adjust the term beyond the expiration date specified in the disclaimer.

Rather, on issuance of the application, in compliance with 35 U.S.C. 154(b) and 37 CFR 1.703(g), it is indicated in the patent that the patent term adjustment indicated therein is subject to any disclaimer. Moreover, it is also stated therein that the patent is subject to a terminal disclaimer. Applicants must determine whether the submission of the terminal disclaimer will prevent them from enforcing the days of patent term adjustment awarded.

Furthermore, it is noted that the terminal disclaimers were filed together with the reply on May 1, 2008, and thus, there is no applicant delay for the filing of the terminal disclaimers.

In view thereof, the revised Patent Term Adjustment remains 838 days.

As this letter was submitted as an advisement to the Office of an error in applicants' favor, the Office will not assess the $200.00 fee under 37 CFR 1.18(e). The Office thanks applicants for their good faith and candor in bringing this to the attention of the Office.

The application is being referred to the Office of Patent Publications for issuance of the patent.

Telephone inquiries specific to this matter should be directed to Christina Tartera Donnell, Senior Petitions Attorney, at (571) 272-3211.

Kery A. Fries

Kery A. Fries
Senior Legal Advisor
Office of Patent Legal Administration

UNITED STATES PATENT AND TRADEMARK OFFICE

Commissioner for Patents
United States Patent and Trademark Office
P. O. Box 1450
Alexandria, VA 22313-1450
www.uspto.gov

TOWNSEND AND TOWNSEND AND CREW, LLP
TWO EMBARCADERO CENTER
EIGHTH FLOOR
SAN FRANCISCO, CA 94111-3834

COPY MAILED

MAR 14 2007

OFFICE OF PETITIONS

In re Application of	:	
Changsheng Ying	:	
Application No. 10/711,153	:	ON PETITION
Filed: August 27, 2004	:	
Attorney Docket No. 21736-000200	:	

This is a decision on the petition under 37 CFR 1.137(b), filed October 24, 2006, to revive the above-identified application.

The petition is **GRANTED**.

The above-identified application became abandoned for failure to reply in a timely manner to the non-final Office action mailed December 20, 2005, which set a shortened statutory period for reply of three (3) months. No extension of time under the provisions of 37 CFR 1.136(a) were obtained. Accordingly, the above-identified application became abandoned on March 21, 2006.

Telephone inquiries concerning this decision should be directed to Irvin Dingle at (571) 272-3210.

This matter is being referred to Technology Center AU 2825 for further processing.

Irvin Dingle
Petitions Examiner
Office of Petitions

UNITED STATES PATENT AND TRADEMARK OFFICE

Commissioner for Patents
United States Patent and Trademark Office
P.O. Box 1450
Alexandria, VA 22313-1450
www.uspto.gov

POLSINELLI SHUGHART PC
700 W. 47TH STREET, SUITE 1000
KANSAS CITY, MO 64112-1802

COPY MAILED

APR 22 2009

OFFICE OF PETITIONS

In re Application of	:	
Edward GRAU	:	
Application No. 10/711,172	:	DECISION ON PETITION
Filed: August 30, 2004	:	TO WITHDRAW
Attorney Docket No. 053328-124694	:	FROM RECORD
	:	

This is a decision on the Request to Withdraw as attorney or agent of record under 37 C.F.R. § 1.36(b), filed April 2, 2009.

The request is **APPROVED**.

A grantable request to withdraw as attorney/agent of record must be signed by every attorney/agent seeking to withdraw or contain a clear indication that one attorney is signing on behalf of another/others. The Office requires the practitioner(s) requesting withdrawal to certify that he, she, or they have: (1) given reasonable notice to the client, prior to the expiration of the response period, that the practitioner(s) intends to withdraw from employment; (2) delivered to the client or a duly authorized representative of the client all papers and property (including funds) to which the client is entitled; and (3) notified the client of any responses that may be due and the time frame within which the client must respond, pursuant 37 CFR 10.40(c).

The request was signed by Patrick Woolley on behalf of all the attorneys of record.

All the attorneys of record have been withdrawn.

Applicant is reminded that there is no attorney of record at this time.

The correspondence address of record has been changed and the new correspondence address is the address indicated below until otherwise properly notified by the applicant.

Telephone inquiries concerning this decision should be directed to the undersigned at 571-272-6735.

Diane Goodwyn
Petitions Examiner
Office of Petitions

cc: GC INVENTORS LLC
7 EAST BURNAM ROAD
COLUMBIA, MO 65203

UNITED STATES PATENT AND TRADEMARK OFFICE

Commissioner for Patents
United States Patent and Trademark Office
P.O. Box 1450
Alexandria, VA 22313-1450
www.uspto.gov

COPY MAILED

NOV 2 8 2006

OFFICE OF PETITIONS

Matthew J. Booth & Associates, PLLC
P.O. Box 50010
Austin, TX 78763-0010

In re Application of :
Rebecca S. Taylor :
Application No. 10/711,173 : DECISION ON PETITION
Filed: August 30, 2004 : TO WITHDRAW
Attorney Docket No. 81250.0106 : FROM RECORD
:

This is a decision on the Request to Withdraw as attorney or agent of record under 37 C.F.R. § 1.36(b), filed August 24, 2006.

The request is **APPROVED**.

A grantable request to withdraw as attorney/agent of record must be signed by every attorney/agent seeking to withdraw or contain a clear indication that one attorney is signing on behalf of another/others. A request to withdraw will not be approved unless at least 30 (thirty) days would remain between the date of approval and the later of the expiration date of a time to file a response or the expiration date of the maximum time period which can be extended under 37 C.F.R. § 1.136(a).

The request was signed by Matthew J. Booth on behalf of all attorneys of record who are associated with Customer No. 23309.

All attorneys/agents associated with the Customer No. 23309 have been withdrawn.

Applicant is reminded that there is no attorney of record at this time.

All future correspondence will be directed to the first named inventor Rebecca S. Taylor at the address indicated below.

There is no outstanding Office action at this time.

Telephone inquiries concerning this decision should be directed to Terri Williams at 571-272-2991.

Terri Williams
Petitions Examiner
Office of Petitions

cc: **Rebecca Taylor**
707 Terrace Mountain Drive
Austin, TX 78746

UNITED STATES PATENT AND TRADEMARK OFFICE

UNITED STATES DEPARTMENT OF COMMERCE
United States Patent and Trademark Office
Address: COMMISSIONER FOR PATENTS
P.O. Box 1450
Alexandria, Virginia 22313-1450
www.uspto.gov

APPLICATION NUMBER	FILING OR 371 (c) DATE	FIRST NAMED APPLICANT	ATTY. DOCKET NO./TITLE
10/711,173	08/30/2004	Rebecca S. Taylor	81250.0106

CONFIRMATION NO. 5172

OC000000021373442

OC000000021373442

23309
Matthew J. Booth & Associates, PLLC
P O BOX 50010
AUSTIN, TX 78763-0010

Date Mailed: 11/27/2006

NOTICE REGARDING CHANGE OF POWER OF ATTORNEY

This is in response to the Power of Attorney filed 08/24/2006.

- The withdrawal as attorney in this application has been accepted. Future correspondence will be mailed to the new address of record. 37 CFR 1.33.

Terri S. Williams

TERRI S WILLIAMS
OP (571) 272-2991

FORMER ATTORNEY/AGENT COPY

UNITED STATES PATENT AND TRADEMARK OFFICE

Commissioner for Patents
United States Patent and Trademark Office
P.O. Box 1450
Alexandria, VA 22313-1450
www.uspto.gov

MOTOROLA, INC.
1303 EAST ALGONQUIN ROAD
IL01/3RD
SCHAUMBURG, IL 60196

COPY MAILED

JUN 24 2008

OFFICE OF PETITIONS

In re Application of :
Weimin Xiao, et. al. :
Application No. 10/711,191 : ON PETITION
Filed: November 24, 2004 :
Attorney Docket No. CML01326T :

This is a decision on the petition under 37 CFR 1.137(b), filed November 16, 2007, to revive the above-identified application.

The application became abandoned for failure to respond to the non-final Office action mailed January 9, 2007. A Notice of Abandonment was mailed on August 14, 2007.

The petition satisfies the requirements of 37 CFR 1.137(b) in that petitioner has supplied (1) the reply in the form of an amendment; (2) the petition fee of $1,540; and (3) a proper statement of unintentional delay. Therefore, the petition is **GRANTED**.

This application file is being referred to Technology Center Art Unit 2121 for review of the response filed with the instant petition.

Telephone inquiries concerning this decision should be directed to the undersigned at (571) 272-3226.

Andrea Smith
Petitions Examiner
Office of Petitions

UNITED STATES PATENT AND TRADEMARK OFFICE

Commissioner for Patents
United States Patent and Trademark Office
P.O. Box 1450
Alexandria, VA 22313-1450
www.uspto.gov

Lott & Friedland, P.A.
P.O. Box 141098
Coral Gables, FL 33114-1098

MAILED

MAY 18 2009

OFFICE OF PETITIONS

In re Application of :
Frank Stems :
Application No. 10/711,218 : DECISION ON PETITION
Filed: September 2, 2004 : TO WITHDRAW
Attorney Docket No. 20040-1-0200 : FROM RECORD
:

This is a decision on the Request to Withdraw as attorney or agent of record under 37 C.F.R. § 1.36(b), filed December 9, 2005.

The request is **moot because a revocation of power of attorney has been previously filed.**

A review of the file record indicates that the power of attorney to Ury Fischer and all attorneys/agents of record has been revoked by the assignee of the patent application on May 9, 2006. Accordingly, the request to withdraw under 37 C.F.R. § 1.36(b) is moot.

All future communications from the Office will continue to be directed to the below-listed address until otherwise notified by applicant.

Telephone inquires concerning this decision should be directed to Kimberly Inabinet at 571-272-4618.

Kimberly Inabinet
Petitions Examiner
Office of Petitions

cc: Hogan & Hartson, L.L.P.
1999 Avenue of the Stars
Suite 1400
Los Angeles, CA 90067

UNITED STATES PATENT AND TRADEMARK OFFICE

Commissioner for Patents
United States Patent and Trademark Office
P.O. Box 1450
Alexandria, VA 22313-1450
www.uspto.gov

HARTMAN & HARTMAN, P.C.
552 EAST 700 NORTH
VALPARAISO, IN 46383

COPY MAILED

MAY 18 2006

OFFICE OF PETITIONS

In re Application of :
Jerry Dusich :
Application No. 10/711,246 : DECISION ON PETITION
Filed: September 3, 2004 : TO MAKE SPECIAL UNDER
Attorney Docket No. A4-1802 : 37 CFR 1.102(c)(1)
:

This is a decision on the petition under 37 CFR 1.102(c)(1), filed March 13, 2006, to make the above-identified application special based on applicant's age as set forth in M.P.E.P. § 708.02, Section IV.

The petition is **DISMISSED**.

A grantable petition to make an application special under 37 CFR 1.102(c)(1) and MPEP § 708.02, Section IV: Applicant's Age, must be accompanied by evidence showing that at least one of the applicants is 65 years of age, or more, such as a birth certificate or a statement by applicant. No fee is required.

The instant petition does not include a signature from Inventor Jerry Dusich.

Further correspondence with respect to this matter should be addressed as follows:

By Mail: Mail Stop PETITION
Commissioner for Patents
P. O. Box 1450
Alexandria, VA 22313-1450

By hand: U. S. Patent and Trademark Office
Customer Service Window, Mail Stop Petitions
Randolph Building
401 Dulany Street
Alexandria, VA 22314

By FAX: (571) 273-8300

Telephone inquiries concerning this decision should be directed to Irvin Dingle at 571-272-3210.

All other inquiries concerning either the examination or status of the application should be directed to the Technology Center.

The application is being forwarded to the Technology Center Art Unit 3635 for action in its regular turn.

Irvin Dingle
Petitions Examiner
Office of Petitions

UNITED STATES PATENT AND TRADEMARK OFFICE

Commissioner for Patents
United States Patent and Trademark Office
P.O. Box 1450
Alexandria, VA 22313-1450
www.uspto.gov

HARTMAN & HARTMAN, P.C.
552 EAST 700 NORTH
VALPARAISO, IN 46383

COPY MAILED

JUN 0 5 2006

OFFICE OF PETITIONS

In re Application of :
Jerry Dusich :
Application No. 10/711,246 : DECISION ON PETITION
Filed: September 3, 2004 : TO MAKE SPECIAL UNDER
Attorney Docket No. A4-1802 : 37 CFR 1.102(c)(1)
:

This is a decision on the petition under 37 CFR 1.102(c)(1), filed May 17, 2006, to make the above-identified application special based on applicant's age as set forth in M.P.E.P. § 708.02, Section IV.

The petition is **GRANTED**.

A grantable petition to make an application special under 37 CFR 1.102(c)(1) and MPEP § 708.02, Section IV: Applicant's Age must be accompanied by evidence showing that at least one of the applicants is 65 years of age, or more, such as a birth certificate or a statement by applicant. No fee is required

The instant petition includes a statement from Inventor Jerry Dusich stating that he is over 65 years of age. Accordingly, the above-identified application has been accorded "special" status.

Telephone inquiries concerning this decision should be directed to Irvin Dingle at 571-272-3210.

All other inquiries concerning either the examination or status of the application should be directed to the Technology Center.

The application is being forwarded to the Technology Center Art Unit 1734 for action on the merits commensurate with this decision.

Irvin Dingle
Petitions Examiner
Office of Petitions

UNITED STATES PATENT AND TRADEMARK OFFICE

COMMISSIONER FOR PATENTS
UNITED STATES PATENT AND TRADEMARK OFFICE
P.O. BOX 1450
ALEXANDRIA, VA 22313-1450
www.uspto.gov

DICKINSON WRIGHT, PLLC
1901 L. STREET NW
SUITE 800
WASHINGTON, DC 20036

COPY MAILED

JUN 06 2007

OFFICE OF PETITIONS

In re Application of :
Ramon Diaz, et. al. :
Application No. 10/711,288 : ON PETITION
Filed: September 8, 2004 :
Attorney Docket No. 28747.00004 :

This is a decision on the petition under 37 CFR 1.137(b), filed on December 1, 2006, to revive the above-identified application.

The above application became abandoned for failure to file a proper reply to the final Office action mailed April 27, 2006.

The petition satisfies the requirements of 37 CFR 1.137(b) in that petitioner has supplied (1) the reply in the form of a Request for Continued Examination (RCE) under 37 CFR 1.114, with the $395 filing fee; (2) the petition fee of $750; and (3) an adequate statement of unintentional delay. Therefore, the petition is **GRANTED**.

This application is being revived for consideration of the RCE.

The application file is being referred to Technology Center Art Unit 3714, for review of the amendment filed with the instant petition.

Telephone inquiries concerning this decision should be directed to the undersigned at (571) 272-3226.

Andrea Smith
Petitions Examiner
Office of Petitions

UNITED STATES PATENT AND TRADEMARK OFFICE

Commissioner for Patents
United States Patent and Trademark Office
P.O. Box 1450
Alexandria, VA 22313-1450
www.uspto.gov

DICKINSON WRIGHT PLLC
38525 WOODWARD AVENUE, SUITE 2000
BLOOMFIELD HILLS, MI 48304-2970

COPY MAILED

MAR 3 1 2006

OFFICE OF PETITIONS

In re Application of :
Natalya Faytlin :
Application No. 10/711,315 : DECISION GRANTING PETITION
Filed: September 10, 2004 : UNDER 37 CFR 1.313(c)(2)
Attorney Docket No. 656200-056 :

This is a decision on the petition under 37 CFR 1.313(c)(2) to withdraw the above-identified application from issue after payment of the issue fee.

The petition is **GRANTED**.

The above-identified application is withdrawn from issue for consideration of a submission under 37 CFR 1.114 (request for continued examination). See 37 CFR 1.313(c)(2).

Petitioner is advised that the issue fee paid on November 10, 2005 in the above-identified application cannot be refunded. If, however, the above-identified application is again allowed, petitioner may request that it be applied towards the issue fee required by the new Notice of Allowance.[1]

Telephone inquiries should be directed to the undersigned at (571) 272-3218.

This matter is being referred to Technology Center AU 3749 for processing of the request for continued examination under 37 CFR 1.114.

Frances Hicks
Petitions Examiner
Office of Petitions

C:\Documents and Settings\FHicks\My Documents\470\Mar9\711315.wpd

---

[1] *The request to apply the issue fee to the new Notice may be satisfied by completing and returning the new Part B – Fee(s) Transmittal Form (along with any balance due at the time of submission), which includes the following language thereon: "The Director of the USPTO is requested to apply the Issue Fee and Publication Fee (if any) or to re-apply any previously paid issue fee in the application identified above. Petitioner is advised that, whether a fee is indicated as being due or not, the Issue Fee Transmittal Form* ***must*** *be completed and timely submitted to avoid abandonment. Note the language in bold text on the first page of the Notice of Allowance and Fee(s) Due (PTOL-85).*

UNITED STATES PATENT AND TRADEMARK OFFICE

UNITED STATES DEPARTMENT OF COMMERCE
United States Patent and Trademark Office
Address: COMMISSIONER FOR PATENTS
P.O. Box 1450
Alexandria, Virginia 22313-1450
www.uspto.gov

Workman Nydegger
1000 Eagle Gate Tower
60 East South Temple
Salt Lake City, UT 84111

Mail Date: 04/21/2010

Applicant	: Arash Massoudi	: DECISION ON REQUEST FOR
Patent Number	: 7584454	: RECALCULATION of PATENT
Issue Date	: 09/01/2009	: TERM ADJUSTMENT IN VIEW
Appliction No	: 10/711,322	: OF WYETH AND NOTICE OF INTENT TO
Filed	: 09/10/2004	: ISSUE CERTIFICATE OF CORRECTION
		:

The Request for Recalculation is **GRANTED** to the extent indicated.

The patent term adjustment has been determined to be **1322** days. The USPTO will *sua sponte* issue a certificate of correction reflecting the amount of PTA days determined by the recalculation.

Prior to the issuance of the certificate of correction, the USPTO will afford patentee an opportunity to be heard and request reconsideration. Accordingly, patentee has **one month or thirty (30) days**, whichever is longer, to file a request for reconsideration of this patent term adjustment calculation. See 35 U.S.C. 154(b)(3)(B)(ii) and 37 CFR 1.322(a)(4). No extensions of time will be granted under 37 CFR 1.136.

Patentee should use document code PET.OP if electronically filing a request for reconsideration of this patent term adjustment calculation. The patentee must also include the information required by 37 CFR 1.705(b)(2) and the fee required by 37 CFR 1.18(e). If patentee does not file a timely request for reconsideration of this patent term adjustment calculation including the information required by 37 CFR 1.705(b)(2) and the fee required by 37 CFR 1.18(e), the USPTO will issue a certificate of correction reflecting the PTA determination noted above.

Patentee should be aware that in order to preserve the right to review in the United States District Court for the District of Columbia of the USPTO patent term adjustment determination, patentee must ensure that he or she also take the steps required under 35 U.S.C. 154(b)(4)(A) in a timely manner. Nothing in the request for recalculation should be construed as providing an alternative time frame for commencing a civil action under 35 U.S.C. 154(b)(4)(A).

Any questions concerning this decision should be directed to the Office of Patent Legal Administration at 571-272-7702.

UNITED STATES PATENT AND TRADEMARK OFFICE

Commissioner for Patents
United States Patent and Trademark Office
P.O. Box 1450
Alexandria, VA 22313-1450
www.uspto.gov

MAILED

AUG 15 2005

Director's Office
Group 3700

GODFREY & KAHN, S.C.
780 North Water Street
Milwaukee, WI 53202

In re Application of :
Brian Arnott :
Serial No. 10/711,328 : **DECISION ON PETITION**
Filed: September 10, 2004 : **TO MAKE SPECIAL**

For: METHOD AND APPARATUS FOR REMOVING OIL SPILLS AND EXTINGUISHING FIRES

Applicant's petition, filed November 12, 2004, seeks to have this application made Special based upon the Environmental Quality Program.

The petition has been reviewed and is found to be in compliance with the requirements for special status as set forth in Section 708.02(V) of the Manual of Patent Examining Procedure (MPEP).

PETITION GRANTED.

Richard A. Bertsch
Technology Center 3700
571-272-3750

rt/ 8/12/05

UNITED STATES PATENT AND TRADEMARK OFFICE

COMMISSIONER FOR PATENTS
UNITED STATES PATENT AND TRADEMARK OFFICE
P.O. BOX 145
ALEXANDRIA, VA 22313-1450
www.uspto.gov

SEP 15 2005

Sonali S. Srivastava
Godfrey & Kahn, S.C.
780 North Water Street
Milwaukee, WI 53202

In re application of : **DECISION ON PETITION**
Brian Arnott : **TO MAKE SPECIAL**
Application No. 10/711,328 : **(ENVIRONMENTAL QUALITY)**
Filed: September 10, 2004 :
For: METHOD AND APPARATUS FOR REMOVING OIL SPILLS AND EXTINGUISHING FIRE

This is a decision on the petition filed November 12, 2004, under 37 CFR 1.102 (c) to make the above-identified application special under the accelerated examination procedure set forth in MPEP 708.02, Section V: Environmental Quality.

A grantable petition to make an application special under 37 C. F. R. 1.102(c), MPEP 708.02, Section V for an invention which materially enhances the quality of the environment of mankind by contributing to the restoration or maintenance of the basic life-sustaining elements-air, water and soil, must be accompanied by affidavits or declaration under 37 CFR 1.102 by the applicant or his attorney explaining how the invention contributes to the maintenance or restoration of one of these life sustaining elements.

The declaration of Sonali S. Srivastava states that "the claimed invention materially enhances the quality of the environment by efficient and effective removal of oil spills and extinguishing fires."

These statements are insufficient to grant a petition under 37 CFR 1.102 (c) to make the above-identified application special under the accelerated examination procedure set forth in MPEP 708.02, Section V: Environmental Quality. In this regard, Sonali S. Srivastava's statements are lacking in that they fail to explain, and establish for the record, how applicants' invention contributes to the maintenance or restoration of the basic life-sustaining elements-air, water and soil. While it may be that applicant's invention materially enhances the quality of the environment by efficient and effective removal of oil spills and extinguishing fires, It is not clear from Sonali S. Srivastava 's statement how this is accomplished or how, in fact, this leads to the "restoration" or "maintenance" of one or more of the basic life-sustaining elements-air, water and soil.

The petition to make special based on Environmental Quality is **DISMISSED.**

Any request for reconsideration must be filed within TWO MONTHS of the date of this decision. Extensions of time under 37 CFR 1.136(a) are permitted. Should petitioner desire reconsideration, he should supplement this petition by a declaration or statement giving the information as outlined above. Applicants should promptly submit a renewed petition to the Commissioner of Patents and Trademarks, P.O. Box 1450, Alexandria, VA 22313-1450. The envelope should indicate that the correspondence be brought to the attention of Technology Center 3600.

Until the renewed petition is submitted, the application will be returned to the examiner's docket to await treatment on the merits in the normal order of examination.

Kenneth J. Dorner
Special Programs Examiner
Technology Center 3600
(571) 272-6587

KJD/mng: 07/25/05

UNITED STATES PATENT AND TRADEMARK OFFICE

Commissioner for Patents
United States Patent and Trademark Office
P.O. Box 1450
Alexandria, VA 22313-1450
www.uspto.gov

Oppedahl and Larson LLP
PO Box 5068
Dillon CO 80435-5068

COPY MAILED

NOV 30 2005

OFFICE OF PETITIONS

In re Application of :
John K. Stevens :
Application No. 10/711,334 : DECISION ON PETITION
Filed: September 10, 2004 :
Attorney Docket No. JKMS.P-007-DV :

This is a decision on the petition filed November 21, 2005, requesting that the above-identified application be accorded a filing date of September 10, 2004, rather than the current filing date of December 6, 2004, with Figure 2 as part of the original disclosure.

On September 10, 2004, applicant filed the above-identified application. On October 12, 2004, the Office mailed a "Notice of Omitted Item(s) in a Nonprovisional Application" (Notice), stating that the application was accorded a filing date of September 10, 2004; however, it appeared that Figure 2 was omitted.

In response, on December 6, 2004, applicant submitted a "Response to Notice of Omitted Item(s)" and a copy of Figure 2. The Response stated that Figure 2 contained no new matter because it was incorporated by reference. Thereafter, the Office of Initial Patent Examination accorded the application a filing date of December 6, 2004; the date applicant submitted the missing Figure 2.

On November 21, 2005, applicant submitted the present petition, a preliminary amendment, and one sheet of drawings containing Figures 1 and 2. Applicant asserted that the present application is a divisional application of Application No. 10/297,246, which incorporated the parent application in its entirety.

Upon a review of the record, Figure 2 has not been located in the official file. However, as applicant previously stated, the specification indicates: "This application is a divisional of U.S. Application No. 10/297,246, filed December 3, 2002, incorporated herein by reference."

Section 201.06(c) of the Manual of Patent Examining Procedure states that:

> . . . an applicant may incorporate by reference the prior application by including, in the application-as-filed, a statement that such specifically enumerated prior application or applications are "hereby incorporated herein by reference." The statement may appear in the specification or in the application transmittal letter. The inclusion of this incorporation by reference of the prior application(s) will permit an applicant to amend the continuing

application to include any subject matter in such prior application(s), without the need for a petition. (Emphasis supplied).

In view of the incorporation by reference of Application No. 10/297,246, Figure 2 is not new matter if it was part of the disclosure of Application No. 10/297,246. Nevertheless, the Notice mailed on October 12, 2004, was correct in stating that Figure 2 appeared to have been omitted. Therefore, Notice will not be withdrawn.

It appears that applicant did not intend to accept the date applicant submitted omitted Figure 2 in the USPTO as the filing date of the above-identified application. Therefore, the petition is **granted** to the extent that the application will be accorded the filing date of September 10, 2004, **without** Figure 2 as part of the original disclosure.

The examiner will review the preliminary amendment filed November 21, 2005, requesting entry of the one drawing sheet (containing Figures 1 and 2) and make a determination of whether new matter is present.

The Office of Initial Patent Examination is directed to accord the application a filing date of September 10, 2004. Figure 2 will not be entered at this time.

Any inquiries related to this decision should be directed to the undersigned at (571) 272-3211.

Christina L. Donnell

Christina Tartera Donnell
Senior Petitions Attorney
Office of Petitions

UNITED STATES PATENT AND TRADEMARK OFFICE

Commissioner for Patents
United States Patent and Trademark Office
P.O. Box 1450
Alexandria, VA 22313-1450
www.uspto.gov

WEI TE CHUNG
FOX CONN INTERNATIONAL, INC.
1650 MEMOREX DRIVE
SANTA CLARA CA 95050

COPY MAILED

APR 29 2008

OFFICE OF PETITIONS

In re Patent No. 7,268,844 :
Issue Date: September 11, 2007 :
Application No. 10/711,343 : NOTICE
Filed: September 13, 2004 :
Attorney Docket No. JEMP0001USA :

This is a notice regarding your request for acceptance of a fee deficiency submission under 37 CFR 1.28. On September 1, 1998, the Court of Appeals for the Federal Circuit held that 37 CFR 1.28(c) is the sole provision governing the time for correction of the erroneous payment of the issue fee as a small entity. **See DH Technology v. Synergystex International, Inc. 154 F.3d 1333, 47 USPQ2d 1865 (Fed. Cir. Sept. 1, 1998).**

The Office no longer investigates or rejects original or reissue applications under 37 CFR 1.56. **1098 Off. Gaz. Pat. Office 502 (January 3, 1989).** Therefore, nothing in this Notice is intended to imply that an investigation was done.

Your fee deficiency submission under 37 CFR 1.28 is hereby **ACCEPTED.**

This application no longer qualifies for small entity status. Accordingly, all future fees in this file must be paid at the large entity rate, absent further notification from a proper party of a change in status. ***See 37 CFR 1.27(c)(2).***

Inquiries related to this communication should be directed to the undersigned at (571) 272-3208.

Karen Creasy
Petitions Examiner
Office of Petitions

UNITED STATES PATENT AND TRADEMARK OFFICE

Commissioner for Patents
United States Patent and Trademark Office
P.O. Box 1450
Alexandria, VA 22313-1450
www.uspto.gov

RAYMOND E. ROBERTS
PATENT VENTURE GROUP
10788 CIVIC CENTER DRIVE, SUITE 215
RANCHO CUCAMONGA CA 91730-3805

MAILED

MAY 11 2009

OFFICE OF PETITIONS

In re Patent No. 7,025,265 :
Issue Date: April 11, 2006 :
Application No. 10/711,355 : DECISION ON PETITION
Filed: September 13, 2004 :
Attorney Docket No. **60154.301803** :

This is a decision on the petition under 37 CFR 1.183 filed February 23, 2009, which is being treated as a request under 37 CFR 3.81(b)[1] to correct the assignee's name on the Fee(s) Transmittal form PTOL-85(b) by way of a certificate of correction in the patent to be issued from the above-identified application.

The petition under 37 CFR 1.183 is **DISMISSED.**

The petition under 37 CFR 3.81(b) to correct the assignee's name is **GRANTED**.

The request is **GRANTED**.

Petitioner states that the correct assignee's name is "None" and that the incorrect assignee's name was included on the Fee(s) Transmittal form PTOL-85(b) at the time of payment of the issue fee. Accordingly, petitioner requests that a certificate of correction be issued to reflect the correct assignee on the front page of the Letters Patent in the patent to be issued from the application.

[1] *See* MPEP 1309, subsection II; and Official Gazette of June 22, 2004.

37 CFR 3.81(b), effective June 25, 2004, reads:

> *After payment of the issue fee:* Any request for issuance of an application in the name of the assignee submitted after the date of payment of the issue fee, and any request for a patent to be corrected to state the name of the assignee, must state that the assignment was submitted for recordation as set forth in § 3.11 before issuance of the patent, and must include a request for a certificate of correction under § 1.323 of this chapter (accompanied by the fee set forth in § 1.20(a) and the processing fee set forth in § 1.17(i) of this chapter.

The request was accompanied by a certificate of correction (and fee) as required by 3.81(b). Further, Office assignment records reflect that there is no assignee of record. Accordingly, as the request complies with the provisions of 37 CFR 3.81(b), it would be appropriate for a certificate of correction to be processed after issuance of this application into a patent.

The petition fee of $400.00 under CFR 1.17(f) submitted with the petition on February 23, 2009 will be will be refunded and a petition fee of $130.00 under CFR 1.17(i) will be charged to the petitioners deposit account.

Inquiries concerning this decision should be directed to the Michelle R. Eason at (571) 272-4231. Any questions concerning the issuance of a certificate of correction should be directed to the Certificates of Correction Branch at (571) 272-4200.

This matter is being referred to the Certificates of Correction Branch for processing of a certificate of correction after issuance of this application into a patent.

Thurman Page
Petitions Examiner
Office of Petitions

UNITED STATES PATENT AND TRADEMARK OFFICE

Commissioner for Patents
United States Patent and Trademark Office
P.O. Box 1450
Alexandria, VA 22313-1450
www.uspto.gov

MESMER & DELEAULT, PLLC
1 NEW HAMPSHIRE AVENUE
SUITE 125
PORTSMOUTH, NH 03801

COPY MAILED

AUG 2 8 2007

OFFICE OF PETITIONS

In re Application of :
Timothy C. Bonerb :
Application No. 10/711,362 : DECISION ON PETITION
Filed: September 14, 2004 :
Attorney Docket No. BON.US.47 :

This is a decision on the petition under the unintentional provisions of 37 CFR 1.137(b), filed April 18, 2007, to revive the above-identified application.

The petition is **DISMISSED**.

Any request for reconsideration of this decision must be submitted within TWO (2) MONTHS from the mail date of this decision. Extensions of time under 37 CFR 1.136(a) are permitted. The reconsideration request should include a cover letter entitled "Renewed Petition under 37 CFR 1.137(b)." This is **not** a final agency action within the meaning of 5 U.S.C. § 704.

This application became abandoned for failure to timely pay the issue and publication fees and to submit corrected formal drawings on or before January 24, 2007, as required by the Notice of Allowance and Fee(s) Due and the Notice of Allowability, mailed October 24, 2006 . Accordingly, the date of abandonment of this application is January 25, 2007. A Notice of Abandonment was mailed on February 21, 2007.

A grantable petition under 37 CFR 1.137(b) must be accompanied by: (1) the required reply, unless previously filed; (2) the petition fee as set forth in 37 CFR 1.17(m); (3) a statement that the entire delay in filing the required reply from the due date for the reply until the filing of a grantable petition pursuant to 37 CFR 1.137(b) was unintentional; and (4) any terminal disclaimer (and fee as set forth in 37 CFR 1.20(d)) required by 37 CFR 1.137(d). Where there is a question as to whether either the abandonment or the delay in filing a petition under 37 CFR 1.137 was unintentional, the Director may require additional

information. *See* MPEP 711.03(c)(II)(C) and (D). The instant petition lacks item(s) (1) above.

The issue and publication fees have been received. However, there is no indication that replacement drawings as required by the Notice of Allowability of October 24, 2006 have been submitted. Accordingly, this application cannot be revived until the replacement drawings have been submitted.

The reply (the replacement drawings) should be accompanied by a renewed petition under 37 CFR 1.137(b) (no additional fee required).

Further correspondence with respect to this matter should be addressed as follows:

By Mail: Mail Stop PETITION
Commissioner for Patents
P. O. Box 1450
Alexandria, VA 22313-1450

By hand: U. S. Patent and Trademark Office
Customer Service Window, Mail Stop Petitions
Randolph Building
401 Dulany Street
Alexandria, VA 22314

The centralized facsimile number is **(571) 273-8300.**

Correspondence regarding this decision may also be filed through the electronic filing system of the USPTO.

To expedite consideration, petitioner may wish to contact the undersigned regarding the filing of the renewed petition under 37 CFR 1.137(b).

Telephone inquiries concerning this decision should be directed to the undersigned at (571) 272-3218.

Frances Hicks
Petitions Examiner
Office of Petitions

UNITED STATES PATENT AND TRADEMARK OFFICE

Commissioner for Patents
United States Patent and Trademark Office
P.O. Box 1450
Alexandria, VA 22313-1450
www.uspto.gov

MESMER & DELEAULT, PLLC
1 NEW HAMPSHIRE AVE.
SUITE 125
PORTSMOUTH NH 03801

COPY MAILED

MAY 0 7 2008

OFFICE OF PETITIONS

In re Application of :
Timothy C. Bonerb :
Application No. 10/711,362 : ON PETITION
Filed: September 14, 2004 :
Attorney Docket No. BON.US.47 :

This is a decision on the petition under 37 CFR 1.137(f) filed October 27, 2007 which is properly treated as a renewed petition under 37 CFR 1.137(b) to revive the above-identified application.

The petition is **GRANTED**.

The above-identified application became abandoned for failure to timely respond to the Notice of Allowance and Issue Fee(s) Due and the Notice of Allowability mailed October 24, 2006, which set a statutory period for reply of three (3) months. Accordingly, by operation of law, the above-identified application became abandoned on January 25, 2007.

The previous Office communication was a petition decision mailed August 28, 2007 and the instant petition appears to be a response to that decision in that it provides the required drawing corrections that were indicated as necessary for a petition grant. The instant petition was a PTO form for Petition for Revival of an Application for Patent Abandoned for Failure to Notify the Office of a Foreign or International Filing (37 CFR 1.137(f). It appears petitioner used the wrong form. The renewed petition included a copy of replacement drawings which were missing from the initial petition filed under 37 CFR 1.137(b), filed April 18, 2007.

The instant renewed petition includes the replacement drawings.

The renewed petition satisfies the conditions for revival pursuant to the provisions of 37 CFR 1.137(b) in that (1) the reply in the form of issue and publication fee(s) due and replacement drawings; (2) the petition fee of $750; and (3) the required statement of unintentional delay have been received. Accordingly, the issue and publication fee and the replacement drawings are accepted as having been unintentionally delayed.

Telephone inquiries concerning this decision should be directed to Carl Friedman at (571) 272-6842.

The application file is being referred to the Office of Patent Publication for appropriate action.

for David Bucci
Petitions Examiner
Office of Petitions

UNITED STATES PATENT AND TRADEMARK OFFICE

COMMISSIONER FOR PATENTS
UNITED STATES PATENT AND TRADEMARK OFFICE
P.O. BOX 1450
ALEXANDRIA, VA 22313-1450
www.uspto.gov

WOOD, HERRON & EVANS, LLP (LEAR)
2700 CAREW TOWER
441 VINE STREET
CINCINNATI, OH 45202

COPY MAILED

MAR 10 2005

OFFICE OF PETITIONS

In re Application of:	:	
Bogdan Radu	:	
Application No. 10/711,385	:	DECISION GRANTING
Filed: September 15, 2004	:	PETITION UNDER
Attorney Docket No.: MASL/58	:	37 CFR 1.47(b)

This is in response to the Petition Under 37 CFR 1.47(b), to Accept Unsigned Declaration and Response to Notice to File Missing Parts, filed January 13, 2005. The petition is filed to allow a person to whom an inventor has assigned or agreed in writing to assign the invention, or who otherwise shows sufficient proprietary interest in the matter justifying such action, to make application on behalf of and as agent for all inventors.

The petition is **granted**.

The above-identified application and papers have been reviewed and found in compliance with 37 CFR 1.47(b). This application is hereby accorded Rule 1.47(b) status.

Petitioner has shown that the non-signing inventor, Bogdan Radu, refuses to join in the application.

As provided in Rule 1.47(b), this Office will forward notice of this application's filing to the non-signing inventors at the addresses given in the Petition. Notice of the filing of this application will also be published in the Official Gazette.

The application file is being referred to Technology Center Art Unit 1773 for examination in due course.

Telephone inquiries related to this decision may be directed to the undersigned at (571) 272-3232

Derek L. Woods
Attorney/Advisor
Office of Petitions

UNITED STATES PATENT AND TRADEMARK OFFICE

COMMISSIONER FOR PATENTS
UNITED STATES PATENT AND TRADEMARK OFFICE
P.O. BOX 1450
ALEXANDRIA, VA 22313-1450
www.uspto.gov

BOGDAN RADU
C/O Karen Smith Kienbaum, Esq.
KAREN SMITH KIENBAUM & ASSOCIATES
400 MONROE
SUITE 470
DETROIT, MI 48226

COPY MAILED

MAR 10 2005

OFFICE OF PETITIONS

In re Application of: :
Robert Haines and Mike Jones : LETTER
Application No. 10/836,089 :
Filed: April 30, 2004 :
Attorney Docket No.: 3726.1000-000 :

Dear Mr. Radu:

You are named as the inventor in the above-identified United States patent application filed under the provisions of 35 U.S.C. 116 (United States Code) and 37 CFR 1.47(b), Rules of Practice in Patent Cases. Should a patent be granted on the application you will be designated therein as the inventor.

As the named inventor you are entitled to inspect any paper in the file wrapper of the application, order copies of all or any part thereof (at a prepaid cost per 37 CFR 1.19) or make your position of record in the application. Alternatively, you may arrange to do any of the preceding through a registered patent attorney or agent presenting written authorization from you. If you care to join the application, counsel of record (see below) would presumably assist you. Joining in the application would entail the filing of an appropriate oath or declaration by you pursuant to 37 CFR 1.63.

Telephone inquiries regarding this communication should be directed to the undersigned at (571) 272-3232. Requests for information regarding your application should be directed to the File Information Unit at (703) 308-2733. Information regarding how to pay for and order a copy of the application, or a specific paper in the application, should be directed to Certification Division at (703) 308-9726 or 1-800-972-6382 (outside the Washington D.C. area).

Derek L. Woods
Attorney/Advisor
Office of Petitions

cc: WOOD, HERRON & EVANS, LLP (LEAR)
2700 CAREW TOWER
441 VINE STREET
CINCINNATI, OH 45202

UNITED STATES PATENT AND TRADEMARK OFFICE

COMMISSIONER FOR PATENTS
UNITED STATES PATENT AND TRADEMARK OFFICE
P.O. BOX 1450
ALEXANDRIA, VA 22313-1450
www.uspto.gov

SNELL & WILMER
ONE ARIZONA CENTER
400 EAST VAN BUREN
PHOENIX, AZ 85004-0001

COPY MAILED

APR 29 2005

OFFICE OF PETITIONS

In re Application of:	:	
Benson et al.	:	
Application No. 10/711,388	:	DECISION GRANTING
Filed: September 15, 2004	:	STATUS UNDER
Title of Invention:	:	37 CFR 1.47(a)
ON-LINE MERCHANT SERVICES SYSTEM	:	
AND METHOD FOR FACILITATING	:	
RESOLUTION OF POST	:	
TRANSACTION DISPUTES	:	

This decision is in response to the Petition Under 37 CFR 1.47(a), filed April 1, 2005, to allow the other inventor(s) to proceed with the application on behalf of himself or herself and the nonsigning inventor(s).

The petition is **granted**.

The above-identified application and papers have been reviewed and found in compliance with 37 CFR 1.47(a). This application is hereby accorded Rule 1.47(a) status.

Petitioner has shown that the non-signing inventors, Judith Continelli and Sandra Hazeltine, refuse to join in the application.

As provided in Rule 1.47(a), this Office will forward notice of this application's filing to the non-signing inventors at the addresses given in the Petition. Notice of the filing of this application will also be published in the Official Gazette.

The application file is being returned to the Office of Initial Patent Examination for continued processing.

Telephone inquiries related to this decision may be directed to the undersigned at (571) 272-3232.

Derek L. Woods
Petitions Attorney
Office of Petitions

UNITED STATES PATENT AND TRADEMARK OFFICE

COMMISSIONER FOR PATENTS
UNITED STATES PATENT AND TRADEMARK OFFICE
P.O. BOX 1450
ALEXANDRIA, VA 22313-1450
www.uspto.gov

Ms. Judith Continelli
5620 W. Tonopah Drive
Glendale, AZ 85308

In re Application of: :
Benson et al. :
Application No. 10/711,388 :
Filed: September 15, 2004 : LETTER
Title of Invention: :
ON-LINE MERCHANT SERVICES SYSTEM :
AND METHOD FOR FACILITATING :
RESOLUTION OF POST :
TRANSACTION DISPUTES :

COPY MAILED

APR 29 2005

OFFICE OF PETITIONS

Dear Ms. Continelli:

You are named as a joint inventor in the above-identified United States patent application filed under the provisions of 35 U.S.C. 116 (United States Code) and 37 CFR 1.47(a), Rules of Practice in Patent Cases. Should a patent be granted on the application you will be designated therein as a joint inventor.

As a named inventor you are entitled to inspect any paper in the file wrapper of the application, order copies of all or any part thereof (at a prepaid cost per 37 CFR 1.19) or make your position of record in the application. Alternatively, you may arrange to do any of the preceding through a registered patent attorney or agent presenting written authorization from you. If you care to join the application, counsel of record (see below) would presumably assist you. Joining in the application would entail the filing of an appropriate oath or declaration by you pursuant to 37 CFR 1.63.

Telephone inquiries regarding this communication should be directed to the undersigned at (571) 272-3232. Requests for information regarding your application should be directed to the File Information Unit at (703) 308-2733. Information regarding how to pay for and order a copy of the application, or a specific paper in the application, should be directed to Certification Division at (703) 308-9726 or 1-800-972-6382 (outside the Washington D.C. area).

Derek L. Woods
Petitions Attorney
Office of Petitions

cc: SNELL & WILMER
ONE ARIZONA CENTER
400 EAST VAN BUREN
PHOENIX, AZ 85004-0001

UNITED STATES PATENT AND TRADEMARK OFFICE

COMMISSIONER FOR PATENTS
UNITED STATES PATENT AND TRADEMARK OFFICE
P.O. BOX 1450
ALEXANDRIA, VA 22313-1450
www.uspto.gov

Ms. Sandra Hazeltine
820 East Corto Oro
Phoenix, AZ 85020-3773

In re Application of:
Benson et al.
Application No. 10/711,388
Filed: September 15, 2004
Title of Invention:
ON-LINE MERCHANT SERVICES SYSTEM
AND METHOD FOR FACILITATING
RESOLUTION OF POST
TRANSACTION DISPUTES

LETTER

COPY MAILED

APR 29 2005

OFFICE OF PETITIONS

Dear Ms. Hazeltine:

You are named as a joint inventor in the above-identified United States patent application filed under the provisions of 35 U.S.C. 116 (United States Code) and 37 CFR 1.47(a), Rules of Practice in Patent Cases. Should a patent be granted on the application you will be designated therein as a joint inventor.

As a named inventor you are entitled to inspect any paper in the file wrapper of the application, order copies of all or any part thereof (at a prepaid cost per 37 CFR 1.19) or make your position of record in the application. Alternatively, you may arrange to do any of the preceding through a registered patent attorney or agent presenting written authorization from you. If you care to join the application, counsel of record (see below) would presumably assist you. Joining in the application would entail the filing of an appropriate oath or declaration by you pursuant to 37 CFR 1.63.

Telephone inquiries regarding this communication should be directed to the undersigned at (571) 272-3232. Requests for information regarding your application should be directed to the File Information Unit at (703) 308-2733. Information regarding how to pay for and order a copy of the application, or a specific paper in the application, should be directed to Certification Division at (703) 308-9726 or 1-800-972-6382 (outside the Washington D.C. area).

Derek L. Woods
Petitions Attorney
Office of Petitions

cc: SNELL & WILMER
ONE ARIZONA CENTER
400 EAST VAN BUREN
PHOENIX, AZ 85004-0001

UNITED STATES PATENT AND TRADEMARK OFFICE

UNITED STATES DEPARTMENT OF COMMERCE
United States Patent and Trademark Office
Address: COMMISSIONER FOR PATENTS
P.O. Box 1450
Alexandria, Virginia 22313-1450
www.uspto.gov

NORTH AMERICA INTELLECTUAL PROPERTY CORPORATION
P.O. BOX 506
MERRIFIELD, VA 22116

Mail Date: 05/19/2010

Applicant	: Chi-Cheng Ju	: DECISION ON REQUEST FOR
Patent Number	: 7630436	: RECALCULATION of PATENT
Issue Date	: 12/08/2009	: TERM ADJUSTMENT IN VIEW
Application No	: 10/711,391	: OF WYETH AND NOTICE OF INTENT TO
Filed	: 09/15/2004	: ISSUE CERTIFICATE OF CORRECTION
		:

The Request for Recalculation is **GRANTED** to the extent indicated.

The patent term adjustment has been determined to be **1423** days. The USPTO will *sua sponte* issue a certificate of correction reflecting the amount of PTA days determined by the recalculation.

Prior to the issuance of the certificate of correction, the USPTO will afford patentee an opportunity to be heard and request reconsideration. Accordingly, patentee has **one month or thirty (30) days**, whichever is longer, to file a request for reconsideration of this patent term adjustment calculation. See 35 U.S.C. 154(b)(3)(B)(ii) and 37 CFR 1.322(a)(4). No extensions of time will be granted under 37 CFR 1.136.

Patentee should use document code PET.OP if electronically filing a request for reconsideration of this patent term adjustment calculation. The patentee must also include the information required by 37 CFR 1.705(b)(2) and the fee required by 37 CFR 1.18(e). If patentee does not file a timely request for reconsideration of this patent term adjustment calculation including the information required by 37 CFR 1.705(b)(2) and the fee required by 37 CFR 1.18(e), the USPTO will issue a certificate of correction reflecting the PTA determination noted above.

Patentee should be aware that in order to preserve the right to review in the United States District Court for the District of Columbia of the USPTO patent term adjustment determination, patentee must ensure that he or she also take the steps required under 35 U.S.C. 154(b)(4)(A) in a timely manner. Nothing in the request for recalculation should be construed as providing an alternative time frame for commencing a civil action under 35 U.S.C. 154(b)(4)(A).

Any questions concerning this decision should be directed to the Office of Patent Legal Administration at 571-272-7702.

UNITED STATES PATENT AND TRADEMARK OFFICE

Commissioner for Patents
United States Patent and Trademark Office
P.O. Box 1450
Alexandria, VA 22313-1450
www.uspto.gov

CHOATE, HALL & STEWART LLP
TWO INTERNATIONAL PLACE
BOSTON, MA 02110

COPY MAILED

NOV 0 4 2008

OFFICE OF PETITIONS

In re Application of :

RIGOPULOS, Alexandria P. :
Application No. 10/711,398 : DECISION ON PETITION
Filed: September 16, 2004 : TO WITHDRAW
Attorney Docket No. **HXT-007** : FROM RECORD
:

This is a decision on the Request to Withdraw as attorney or agent under 37 C.F.R. § 1.36(b) or 37 C.F.R. § 10.40 filed September 10, 2008.

The request is **NOT APPROVED**.

A review of the file record indicates that customer no. 24280 does not have power of attorney in this patent application nor is there any statement or evidence of record of employment in or otherwise being engaged in the proceedings in this patent application. Accordingly, the request to withdraw under 37 C.F.R. § 1.36(b) is not applicable.

All future communications from the Office will continue to be directed to the below-listed address until otherwise properly notified by the applicant.

Telephone inquires concerning this decision should be directed to the undersigned at 571-272-4231.

Michelle R. Eason
Paralegal Specialist
Office of Petitions

cc: **LAHIVE & COCKFIELD, LLP**
FLOOR 30, SUITE 3000
ONE POST OFFICE SQUARE
BOSTON MA 02109

UNITED STATES PATENT AND TRADEMARK OFFICE

Commissioner for Patents
United States Patent and Trademark Office
P.O. Box 1450
Alexandria, VA 22313-1450
www.uspto.gov

KONSTANDINOS ZAMFES
1830 - 10TH AVE S.W.
CALGARY AB T3C-OJ8
CANADA

COPY MAILED

JAN 17 2007

OFFICE OF PETITIONS

In re Application of :
Konstandinos Zamfes :
Application No. 10/711,435 : ON PETITION
Filed: 09-17-2004 :
Title: Horizontal Binocular Microscope for vertically gravitated and floating samples. :

This is a decision on the petition under 37 CFR 1.137(a), filed September 19, 2006, to revive the above-identified application.

On February 7, 2006, the Office mailed a nonfinal Office action, which set a three month shortened statutory period for reply. Petitioner obtained an extension of time for response within the second month and paid the requisite fee.[1] In the absence of a timely filed reply, the application became abandoned on July 8, 2006. On October 11, 2006, the Office mailed a Notice of Abandonment.

DISCUSSION

A grantable petition to revive an abandoned application under 37 CFR 1.137(a) must be accompanied by:

(1) The reply required to the outstanding Office action or notice, unless previously filed.

(2) The petition fee as set forth in § 1.17(l);

---

[1] Prior to the expiration of the statutory period, petitioner submitted four separate requests for a one month extension of time to reply each of which were accompanied by a credit card authorization for $60.00 (i.e. May 3, 2006, June 6, 2006, July 6, 2006, August 7, 2006), for a total of $240.00. The current fee for a two-month extension of time is $225.00. Therefore, petitioner paid enough money to obtain a two-month extension of time to reply, leaving an overpayment of $15.00.

In addition, petitioner submitted a fifth request for a one-month extension of time accompanied by a credit card authorization for $60.00 on September 5, 2006, after the expiration of the statutory period for reply. The Office notes that an extension of time under 37 CFR 1.136 must be filed prior to the expiration of the maximum extendable period for reply. See In re Application of S., 8 USPQ2d 1630, 1631 (Comm'r Pats. 1988). Therefore, the $60.00 extension of time fee paid on September 5, 2006, and the $15.00 overpayment will be refunded to petitioner's credit card.

(3) A showing to the satisfaction of the Director that the entire delay in filing the required reply from the due date for the reply until the filing of a grantable petition was unavoidable; and

(4) Any terminal disclaimer (and fee set forth in § 1.20(d)) required pursuant to § 1.137(d).

This petition lacks items (1) and (3) above.

Initially, the Office notes that petitioner did not submit a reply to the nonfinal Office action previously or with the present petition. The required reply to a non-final action in a nonprovisional application abandoned for failure to prosecute may be either: (A) an argument or amendment under 37 CFR 1.111 or (B) the filing of a continuing application under 37 CFR 1.53(b). Before the application can be revived, **petitioner must submit a proper reply to the nonfinal Office action.**

The Director may revive an abandoned application if the delay in responding to the relevant outstanding Office requirement is shown to the satisfaction of the Director to be "unavoidable." Decisions on reviving abandoned applications on the basis of "unavoidable" delay have adopted the reasonably prudent person standard in determining if the delay was unavoidable:

> The word 'unavoidable' . . . is applicable to ordinary human affairs, and requires no more or greater care or diligence than is generally used and observed by prudent and careful men in relation to their most important business. It permits them in the exercise of this care to rely upon the ordinary and trustworthy agencies of mail and telegraph, worthy and reliable employees, and such other means and instrumentalities as are usually employed in such important business. If unexpectedly, or through the unforeseen fault or imperfection of these agencies and instrumentalities, there occurs a failure, it may properly be said to be unavoidable, all other conditions of promptness in its rectification being present.[2]

Specifically, an application is "unavoidably" abandoned only where petitioner, or counsel for petitioner, takes all action necessary for a proper response to the outstanding Office action, but through the intervention of unforeseen circumstances, such as failure of mail, telegraph, facsimile, or the negligence of otherwise reliable employees, the response is not timely received in the Office.[3]

---

[2] In re Mattullath, 38 App. D.C. 497, 514-15 (1912)(quoting Ex parte Pratt, 1887 Dec. Comm'r Pat. 31, 32-33 (1887)); see also Winkler v. Ladd, 221 F. Supp. 550, 552, 138 USPQ 666, 167-68 (D.D.C. 1963), aff'd, 143 USPQ 172 (D.C. Cir. 1963); Ex parte Henrich, 1913 Dec. Comm'r Pat. 139, 141 (1913). In addition, decisions on revival are made on a "case-by-case basis, taking all the facts and circumstances into account." Smith v. Mossinghoff, 671 F.2d 533, 538, 213 USPQ 977, 982 (D.C. Cir. 1982). Finally, a petition cannot be granted where a petitioner has failed to meet his or her burden of establishing that the delay was "unavoidable." Haines v. Quigg, 673 F. Supp. 314, 316-17, 5 USPQ2d 1130, 1131-32 (N.D. Ind. 1987).

[3] Ex parte Pratt, 1887 Dec. Comm'r Pat. 31 (Comm'r Pat. 1887).

In the present petition, petitioner did not provide a "showing" of unavoidable delay. In particular, petitioner failed to explain why the events surrounding the delay were unavoidable. Instead, petitioner simply listed the follow four reasons as to why the delay in filing a reply was unavoidable:

1. Corporate restructure
2. Additional experimental work, that may reflect on patent specifics
3. The initial filing been maid [sic] by old electronic business center (EBC) and lot of mistakes been made [sic] as the system did not allowed [sic] the parentheses, etc.
4. The switching to new filing system is requiring some learning time.

Petitioner must provide the Office with a thorough explanation, accompanied by any documentary evidence, to support petitioner's argument that petitioner, or counsel for petitioner, took all action necessary to submit a timely and proper response to the outstanding nonfinal Office action, but through the intervention of unforeseen circumstances, the reply was not timely received in the USPTO.

For example, if petitioner is asserting that the delay was unavoidable as a result of an error on the part of an employee in the performance of a clerical function, petitioner must show that: (1) the error was the cause of the delay at issue; (2) there was in place a business routine for performing the clerical function that could reasonably be relied upon to avoid errors in its performance; and (3) the employee was sufficiently trained and experienced with regard to the function and routine for its performance that reliance upon such employee represented the exercise of due care.[4] In addition, an adequate showing of unavoidable delay due to clerical error requires:

> (A) Statements by all persons with direct knowledge of the circumstances surrounding the delay, setting forth the facts as they know them.
>
> (B) Petitioner must supply a thorough explanation of the docketing and call-up system in use and must identify the type of records kept and the person responsible for the maintenance of the system. This showing must include copies of mail ledgers, docket sheets, file wrappers and such other records as may exist which would substantiate an error in docketing, and include an indication as to why the system failed to provide adequate notice that a reply was due.
>
> (C) Petitioner must supply information regarding the training provided to the personnel responsible for the docketing error, degree of supervision of their work, examples of other work functions carried out, and checks on the described work which were used to assure proper execution of assigned tasks.

Nevertheless, the Office reminds petitioner that an applicant's preoccupation with other matters that took precedence over an application does not constitute unavoidable delay.[5]

---

[4] See MPEP 711.03(c)(III)(C)(2).

[5] See Smith v. Mossinghoff, 671 F.2d 533, 538, 213 USPQ 977, 982 (D.C. Cir. 1982).

As petitioner has not provided a showing to the satisfaction of the Director that the entire delay in filing the required reply from the due date for the reply until the filing of a grantable petition was unavoidable, the petition under 37 CFR 1.137(a) is **dismissed**.

Any request for reconsideration of this decision must be submitted within **TWO (2) MONTHS** from the mail date of this decision. The reconsideration request should include a cover letter entitled "Renewed Petition under 37 CFR 1.137(a)." Extensions of time are permitted under 37 CFR 1.136(a).

ALTERNATIVE VENUE

Instead of filing a renewed petition under 37 CFR 1.137(a), petitioner may wish to file a petition pursuant to 37 CFR 1.137(b) on the basis of **unintentional** delay. The appropriate form (PTO/SB/64) accompanies this decision.

A grantable petition pursuant to 37 CFR 1.137(b) must be accompanied by:

(1) The reply required to the outstanding Office action or notice, unless previously filed.

(2) The petition fee as set forth in § 1.17(m), an additional $750.00 for a small entity;

(3) A statement that the entire delay in filing the required reply from the due date for the reply until the filing of a grantable petition was unintentional. The Director may require additional information where there is a question whether the delay was unintentional; and,

(4) Any terminal disclaimer (and fee set forth in § 1.20(d)) required pursuant to § 1.137(d), unless previously filed.

Petitioner may wish to contact the Inventors Assistance Center (IAC) by telephone at 800-786-9199 or 571-272-1000, Monday through Friday from 8:30 AM to 5:30 PM (EST). The IAC provides patent information and services to the public and is staffed by former Supervisory Patent Examiners and experienced Primary Examiners who answer general questions concerning patent examining policy and procedure.

Further correspondence with respect to this matter should be addressed as follows:

By mail: Mail Stop Petition
Commissioner for Patents
P.O. Box 1450
Alexandria, VA 22313-1450

By FAX: (571) 273-8300
Attn: Office of Petitions

By hand: Customer Service Window
Randolph Building
401 Dulany Street
Alexandria, VA 22314

Telephone inquiries related to this decision may be directed to the undersigned at (571) 272-3211.

C. T. Donnell

Christina Tartera Donnell
Senior Petitions Attorney
Office of Petitions

Enclosure: Form PTO/SB/64

PTO/SB/64 (09-06)
Approved for use through 03/31/2007. OMB 0651-0031
U.S. Patent and Trademark Office; U.S. DEPARTMENT OF COMMERCE
Under the Paperwork Reduction Act of 1995, no persons are required to respond to a collection of information unless it displays a valid OMB control number.

PETITION FOR REVIVAL OF AN APPLICATION FOR PATENT ABANDONED UNINTENTIONALLY UNDER 37 CFR 1.137(b)

Docket Number (Optional)

First named inventor:

Application No.: Art Unit:

Filed: Examiner:

Title:

Attention: Office of Petitions
Mail Stop Petition
Commissioner for Patents
P.O. Box 1450
Alexandria, VA 22313-1450
FAX (571) 273-8300

NOTE: If information or assistance is needed in completing this form, please contact Petitions Information at (571) 272-3282.

The above-identified application became abandoned for failure to file a timely and proper reply to a notice or action by the United States Patent and Trademark Office. The date of abandonment is the day after the expiration date of the period set for reply in the office notice or action plus an extensions of time actually obtained.

APPLICANT HEREBY PETITIONS FOR REVIVAL OF THIS APPLICATION

NOTE: A grantable petition requires the following items:
(1) Petition fee;
(2) Reply and/or issue fee;
(3) Terminal disclaimer with disclaimer fee - required for all utility and plant applications filed before June 8, 1995; and for all design applications; and
(4) Statement that the entire delay was unintentional.

1.Petition fee

☐ Small entity-fee $ _____ (37 CFR 1.17(m)). Applicant claims small entity status. See 37 CFR 1.27.

☐ Other than small entity – fee $ _____ (37 CFR 1.17(m))

2. Reply and/or fee

A. The reply and/or fee to the above-noted Office action in the form of _____(identify type of reply):

☐ has been filed previously on _____.
☐ is enclosed herewith.

B. The issue fee and publication fee (if applicable) of $ _____.

☐ has been paid previously on _____.
☐ is enclosed herewith.

This collection of information is required by 37 CFR 1.137(b). The information is required to obtain or retain a benefit by the public which is to file (and by the USPTO to process) an application. Confidentiality is governed by 35 U.S.C. 122 and 37 CFR 1.11 and 1.14. This collection is estimated to take 1.0 hour to complete, including gathering, preparing, and submitting the completed application form to the USPTO. Time will vary depending upon the individual case. Any comments on the amount of time you require to complete this form and/or suggestions for reducing this burden, should be sent to the Chief Information Officer, U.S. Patent and Trademark Office, U.S. Department of Commerce, P.O. Box 1450, Alexandria, VA 22313-1450. DO NOT SEND FEES OR COMPLETED FORMS TO THIS ADDRESS. **SEND TO: Mail Stop Petition, Commissioner for Patents, P.O. Box 1450, Alexandria, VA 22313-1450.**

If you need assistance in completing the form, call 1-800-PTO-9199 and select option 2.

3. Terminal disclaimer with disclaimer fee

☐ Since this utility/plant application was filed on or after June 8, 1995, no terminal disclaimer is required.

☐ A terminal disclaimer (and disclaimer fee (37 CFR 1.20(d)) of $ _____ for a small entity or $ _____ for other than a small entity) disclaiming the required period of time is enclosed herewith (see PTO/SB/63).

4. STATEMENT: The entire delay in filing the required reply from the due date for the required reply until the filing of a grantable petition under 37 CFR 1.137(b) was unintentional. [NOTE: The United States Patent and Trademark Office may require additional information if there is a question as to whether either the abandonment or the delay in filing a petition under 37 CFR 1.137(b) was unintentional (MPEP 711.03(c), subsections (III)(C) and (D)).]

WARNING:

Petitioner/applicant is cautioned to avoid submitting personal information in documents filed in a patent application that may contribute to identity theft. Personal information such as social security numbers, bank account numbers, or credit card numbers (other than a check or credit card authorization form PTO-2038 submitted for payment purposes) is never required by the USPTO to support a petition or an application. If this type of personal information is included in documents submitted to the USPTO, petitioners/applicants should consider redacting such personal information from the documents before submitting them to the USPTO. Petitioner/applicant is advised that the record of a patent application is available to the public after publication of the application (unless a non-publication request in compliance with 37 CFR 1.213(a) is made in the application) or issuance of a patent. Furthermore, the record from an abandoned application may also be available to the public if the application is referenced in a published application or an issued patent (see 37 CFR 1.14). Checks and credit card authorization forms PTO-2038 submitted for payment purposes are not retained in the application file and therefore are not publicly available.

_____ _____
Signature Date

_____ _____
Typed or printed name Registration Number, if applicable

_____ _____
Address Telephone Number

_____
Address

Enclosures: ☐ Fee Payment
☐ Reply
☐ Terminal Disclaimer Form
☐ Additional sheets containing statements establishing unintentional delay
☐ Other: _____

CERTIFICATE OF MAILING OR TRANSMISSION [37 CFR 1.8(a)]

I hereby certify that this correspondence is being:

☐ Deposited with the United States Postal Service on the date shown below with sufficient postage as first class mail in an envelope addressed to: Mail Stop Petition, Commissioner for Patents, P. O. Box 1450, Alexandria, VA 22313-1450.

☐ Transmitted by facsimile on the date shown below to the United States Patent and Trademark Office at (571) 273-8300.

_____ _____
Date Signature

_____
Typed or printed name of person signing certificate

Privacy Act Statement

The **Privacy Act of 1974 (P.L. 93-579)** requires that you be given certain information in connection with your submission of the attached form related to a patent application or patent. Accordingly, pursuant to the requirements of the Act, please be advised that: (1) the general authority for the collection of this information is 35 U.S.C. 2(b)(2); (2) furnishing of the information solicited is voluntary; and (3) the principal purpose for which the information is used by the U.S. Patent and Trademark Office is to process and/or examine your submission related to a patent application or patent. If you do not furnish the requested information, the U.S. Patent and Trademark Office may not be able to process and/or examine your submission, which may result in termination of proceedings or abandonment of the application or expiration of the patent.

The information provided by you in this form will be subject to the following routine uses:

1. The information on this form will be treated confidentially to the extent allowed under the Freedom of Information Act (5 U.S.C. 552) and the Privacy Act (5 U.S.C 552a). Records from this system of records may be disclosed to the Department of Justice to determine whether disclosure of these records is required by the Freedom of Information Act.
2. A record from this system of records may be disclosed, as a routine use, in the course of presenting evidence to a court, magistrate, or administrative tribunal, including disclosures to opposing counsel in the course of settlement negotiations.
3. A record in this system of records may be disclosed, as a routine use, to a Member of Congress submitting a request involving an individual, to whom the record pertains, when the individual has requested assistance from the Member with respect to the subject matter of the record.
4. A record in this system of records may be disclosed, as a routine use, to a contractor of the Agency having need for the information in order to perform a contract. Recipients of information shall be required to comply with the requirements of the Privacy Act of 1974, as amended, pursuant to 5 U.S.C. 552a(m).
5. A record related to an International Application filed under the Patent Cooperation Treaty in this system of records may be disclosed, as a routine use, to the International Bureau of the World Intellectual Property Organization, pursuant to the Patent Cooperation Treaty.
6. A record in this system of records may be disclosed, as a routine use, to another federal agency for purposes of National Security review (35 U.S.C. 181) and for review pursuant to the Atomic Energy Act (42 U.S.C. 218(c)).
7. A record from this system of records may be disclosed; as a routine use, to the Administrator, General Services, or his/her designee, during an inspection of records conducted by GSA as part of that agency's responsibility to recommend improvements in records management practices and programs, under authority of 44 U.S.C. 2904 and 2906. Such disclosure shall be made in accordance with the GSA regulations governing inspection of records for this purpose, and any other relevant (*i.e.*, GSA or Commerce) directive. Such disclosure shall not be used to make determinations about individuals.
8. A record from this system of records may be disclosed, as a routine use, to the public after either publication of the application pursuant to 35 U.S.C. 122(b) or issuance of a patent pursuant to 35 U.S.C. 151. Further, a record may be disclosed, subject to the limitations of 37 CFR 1.14, as a routine use, to the public if the record was filed in an application which became abandoned or in which the proceedings were terminated and which application is referenced by either a published application, an application open to public inspection or an issued patent.
9. A record from this system of records may be disclosed, as a routine use, to a Federal, State, or local law enforcement agency, if the USPTO becomes aware of a violation or potential violation of law or regulation.

UNITED STATES PATENT AND TRADEMARK OFFICE

Commissioner for Patents
United States Patent and Trademark Office
P.O. Box 1450
Alexandria, VA 22313-1450
www.uspto.gov

DIEDERIKS & WHITELAW, PLC
#301, 12471 Dillingham Square
Woodbridge, VA 22192

COPY MAILED

JUN 14 2007

OFFICE OF PETITIONS

In re Application of :
Konstandinos Zamfes :
Application No. 10/711,435 : ON PETITION
Filed: 09-17-2004 :
Title: Horizontal Binocular Microscope for :
vertically gravitated and floating samples. :

This is a decision on the petition under 37 CFR 1.137(b), filed June 4, 2007, to revive the above-identified application.

The application became abandoned for failure to reply in a timely manner to the non-final Office action, mailed February 7, 2006, which set a shortened statutory period for reply of three (3) months. Petitioner obtained an extensions of time for response within the second month pursuant to the provisions of 37 CFR 1.136(a) were obtained. Accordingly, the application became abandoned on July 8, 2006. On October 11, 2006, the Office mailed a Notice of Abandonment.

The petition satisfies the requirements of 37 CFR 1.137(b) in that petitioner has supplied (1) the reply in the form of an amendment; (2) the petition fee; and (3) a proper statement of unintentional delay.

This application is being referred to Technology Center AU 2872 for review of the amendment.

Telephone inquiries concerning this decision should be directed to the undersigned at (571) 272-3211.

Christina Tartera Donnell

Christina Tartera Donnell
Senior Petitions Attorney
Office of Petitions

UNITED STATES PATENT AND TRADEMARK OFFICE

UNITED STATES DEPARTMENT OF COMMERCE
United States Patent and Trademark Office
Address: COMMISSIONER FOR PATENTS
P.O. Box 1450
Alexandria, Virginia 22313-1450
www.uspto.gov

ROBERTS MLOTKOWSKI SAFRAN & COLE, P.C.
Intellectual Property Department
P.O. Box 10064
MCLEAN, VA 22102-8064

Mail Date: 04/20/2010

Applicant	: Toshiharu Furukawa	: DECISION ON REQUEST FOR
Patent Number	: 7585614	: RECALCULATION of PATENT
Issue Date	: 09/08/2009	: TERM ADJUSTMENT IN VIEW
Appliction No	: 10/711,458	: OF WYETH AND NOTICE OF INTENT TO
Filed	: 09/20/2004	: ISSUE CERTIFICATE OF CORRECTION
		:

The Request for Recalculation is **GRANTED** to the extent indicated.

The patent term adjustment has been determined to be **1388** days. The USPTO will *sua sponte* issue a certificate of correction reflecting the amount of PTA days determined by the recalculation.

Prior to the issuance of the certificate of correction, the USPTO will afford patentee an opportunity to be heard and request reconsideration. Accordingly, patentee has **one month or thirty (30) days**, whichever is longer, to file a request for reconsideration of this patent term adjustment calculation. See 35 U.S.C. 154(b)(3)(B)(ii) and 37 CFR 1.322(a)(4). No extensions of time will be granted under 37 CFR 1.136.

Patentee should use document code PET.OP if electronically filing a request for reconsideration of this patent term adjustment calculation. The patentee must also include the information required by 37 CFR 1.705(b)(2) and the fee required by 37 CFR 1.18(e). If patentee does not file a timely request for reconsideration of this patent term adjustment calculation including the information required by 37 CFR 1.705(b)(2) and the fee required by 37 CFR 1.18(e), the USPTO will issue a certificate of correction reflecting the PTA determination noted above.

Patentee should be aware that in order to preserve the right to review in the United States District Court for the District of Columbia of the USPTO patent term adjustment determination, patentee must ensure that he or she also take the steps required under 35 U.S.C. 154(b)(4)(A) in a timely manner. Nothing in the request for recalculation should be construed as providing an alternative time frame for commencing a civil action under 35 U.S.C. 154(b)(4)(A).

Any questions concerning this decision should be directed to the Office of Patent Legal Administration at 571-272-7702.

UNITED STATES PATENT AND TRADEMARK OFFICE

COMMISSIONER FOR PATENTS
UNITED STATES PATENT AND TRADEMARK OFFICE
P.O. BOX 1450
ALEXANDRIA, VA 22313-1450
WWW.USPTO.GOV

Paper No. None

WOOD, HERRON & EVANS, LLP (LEAR)
2700 CAREW TOWER
441 VINE STREET
CINCINNATI OH 45202

COPY MAILED

FEB 25 2005

OFFICE OF PETITIONS

In re Application of :
Bogdan Radu and David Dooley :
Application No. 10/711,462 : DECISION ON PETITION
Filed: September 20, 2004 :
Attorney Docket No. MASL-57 :
Title: DOOR TRIM BOLSTER WITH :
ELECTROLUMINESCENT LAMP AND
INJECTION MOLDILNG METHOD OF
MAKING SAME

This is in response to the petition under 37 C.F.R. §1.47(a)[1], filed November 26, 2004.

On September 20, 2004, the application was deposited, identifying Bogdan Radu and David Dooley as joint inventors. The application was deposited without an executed oath or declaration[2]. On October 20, 2004, the Office mailed a Notice to File Missing Parts of Nonprovisional Application (Notice), requiring an executed oath or declaration along with the

[1]A grantable petition under 37 C.F.R. §1.47(a) requires:
(1) the petition fee of $130;
(2) a surcharge of either $65 or $130 if the petition is not filed at the time of filing the application, as set forth in 37 CFR § 1.16(e);
(3) a statement of the last known address of the non-signing inventors;
(4) either
a) proof that a copy of the entire application (specification, claims, drawings, and the oath or declaration) was sent or given to the non-signing inventor for review and proof that the non-signing inventor refuses to join in the application or
b) proof that the non-signing inventor cannot be found or reached after diligent effort;
(5) a declaration which complies with 37 CFR §1.63.

2 The declaration submitted on filing was executed by joint inventor Dooley.

surcharge associated with the late filing of an oath or declaration. The notice set a two-month period for response.

With the instant petition, Petitioner has submitted the petition fee, the last address of the non-signing inventor, a statement of facts, and a copy of a letter sent from the representative of the non-signing joint inventor. The surcharge associated with the late filing of an oath or declaration has been charged to Petitioner's Deposit Account, as authorized in the petition.

With the instant petition, Petitioner has met each of the 5 requirements above.

The petition is **GRANTED** and this application is hereby accorded Rule §1.47(a) status.

As provided in Rule 1.47(a), this Office will forward notice of this application's filing to the non-signing inventor at the address given in the petition. Notice of the filing of this application will also be published in the Official Gazette.

After this decision is mailed, the application will be forwarded to Technology Center 3600 for further processing.

The general phone number for the Office of Petitions which should be used for status requests is (571) 272-3282. Telephone inquiries regarding *this decision* should be directed to the undersigned at (571) 272-3225.

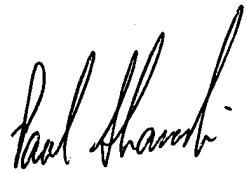

Paul Shanoski
Senior Attorney
Office of Petitions
United States Patent and Trademark Office

UNITED STATES PATENT AND TRADEMARK OFFICE

COMMISSIONER FOR PATENTS
UNITED STATES PATENT AND TRADEMARK OFFICE
P.O. BOX 1450
ALEXANDRIA, VA 22313-1450
WWW.USPTO.GOV

COPY MAILED

FEB 2 5 2005

OFFICE OF PETITIONS

Bogdan Radu
16011 Knollwood Drive
Dearborn, MI 48120

In re Application of :
Bogdan Radu and David Dooley :
Application No. 10/711,462 : DECISION ON PETITION
Filed: September 20, 2004 :
Attorney Docket No. MASL-57 :
Title: DOOR TRIM BOLSTER WITH :
ELECTROLUMINESCENT LAMP AND :
INJECTION MOLDILNG METHOD OF MAKING :
SAME :

Dear Mr. Radu:

You are named as a joint inventor in the above-identified United States patent application filed under the provisions of 35 U.S.C. 116 (United States Code) and 37 CFR 1.47(a), Rules of Practice in Patent Cases. Should a patent be granted on the application you will be designated therein as a joint inventor.

As a named inventor you are entitled to inspect any paper in the file wrapper of the application, order copies of all or any part thereof (at a prepaid cost per 37 CFR 1.19) or make your position of record in the application. Alternatively, you may arrange to do any of the preceding through a registered patent attorney or agent presenting written authorization from you. If you care to join the application, the attorney of record below would presumably assist you. Joining in the application would entail the filing of an appropriate oath or declaration by you pursuant to 37 CFR 1.63.

Telephone inquiries regarding this communication should be directed to the undersigned at (571) 272-3225. Requests for information regarding your application should be directed to the File Information Unit at (703) 308-2733. Information regarding how to pay for and order a copy of the application, or a specific paper in the application, should be directed to the Certification Division at (703) 308-9726 or 1-800-972-6382 (outside the Washington D.C. area).

cc: Karen Smith Kienbaum & Associates
400 Monroe, Suite 470,
Detroit, Michigan 48226

WOOD, HERRON & EVANS, LLP (LEAR)
2700 CAREW TOWER
441 VINE STREET
CINCINNATI OH 45202

UNITED STATES PATENT AND TRADEMARK OFFICE

COMMISSIONER FOR PATENTS
UNITED STATES PATENT AND TRADEMARK OFFICE
P.O. BOX 1450
ALEXANDRIA, VA 22313-1450
WWW.USPTO.GOV

Paper No. None

WOOD, HERRON & EVANS, LLP (LEAR)
2700 CAREW TOWER
441 VINE STREET
CINCINNATI OH 45202

COPY MAILED

MAR 0 2 2005

OFFICE OF PETITIONS

In re Application of
Bogdan Radu Alan G. Dry, and David Dooley
Application No. 10/711,463
Filed: September 20, 2004
Attorney Docket No. MASL-59
Title: DOOR TRIM SPEAKER GRILLE WITH ELECTROLUMINESCENT LAMP AND INJECTION MOLDING METHOD OF MAKING SAME

DECISION ON PETITION

This is in response to the petition under 37 C.F.R. §1.47(a)[1], filed December 9, 2004.

On September 20, 2004, the application was deposited, identifying Bogdan Radu and David Dooley as joint inventors. The application was deposited without an executed oath or declaration[2]. On October 25, 2004, the Office mailed a Notice to File Missing Parts of Nonprovisional Application (Notice), requiring an executed oath or declaration along with the

[1]A grantable petition under 37 C.F.R. §1.47(a) requires:
(1) the petition fee of $130;
(2) a surcharge of either $65 or $130 if the petition is not filed at the time of filing the application, as set forth in 37 CFR § 1.16(e);
(3) a statement of the last known address of the non-signing inventors;
(4) either
a) proof that a copy of the entire application (specification, claims, drawings, and the oath or declaration) was sent or given to the non-signing inventor for review and proof that the non-signing inventor refuses to join in the application or
b) proof that the non-signing inventor cannot be found or reached after diligent effort;
(5) a declaration which complies with 37 CFR §1.63.

2 The declaration submitted on filing was executed by joint inventors Dry and Dooley.

surcharge associated with the late filing of an oath or declaration. The notice set a two-month period for response.

With the instant petition, Petitioner has submitted the petition fee, the last address of the non-signing inventor, a statement of facts, and a copy of a letter sent from the representative of the non-signing joint inventor. The surcharge associated with the late filing of an oath or declaration has been charged to Petitioner's Deposit Account, as authorized in the petition.

With the instant petition, Petitioner has met each of the 5 requirements above.

The petition is **GRANTED** and this application is hereby accorded Rule §1.47(a) status.

As provided in Rule 1.47(a), this Office will forward notice of this application's filing to the non-signing inventor at the address given in the petition. Notice of the filing of this application will also be published in the Official Gazette.

After this decision is mailed, the application will be forwarded to Technology Center 2800 for further processing.

The general phone number for the Office of Petitions which should be used for status requests is (571) 272-3282. Telephone inquiries regarding *this decision* should be directed to the undersigned at (571) 272-3225.

Paul Shanoski
Senior Attorney
Office of Petitions
United States Patent and Trademark Office

UNITED STATES PATENT AND TRADEMARK OFFICE

COMMISSIONER FOR PATENTS
UNITED STATES PATENT AND TRADEMARK OFFICE
P.O. BOX 1450
ALEXANDRIA, VA 22313-1450
WWW.USPTO.GOV

Bogdan Radu
16011 Knollwood Drive
Dearborn, MI 48120

COPY MAILED

MAR 0 2 2005

OFFICE OF PETITIONS

In re Application of :
Bogdan Radu, Alan G. Dry, and David Dooley :
Application No. 10/711,463 :
Filed: September 20, 2004 :
Attorney Docket No. MASL-59 :
Title: DOOR TRIM SPEAKER GRILLE WITH ELECTROLUMINESCENT LAMP AND INJECTION MOLDING METHOD OF MAKING SAME :

DECISION ON PETITION

Dear Mr. Radu:

You are named as a joint inventor in the above-identified United States patent application filed under the provisions of 35 U.S.C. 116 (United States Code) and 37 CFR 1.47(a), Rules of Practice in Patent Cases. Should a patent be granted on the application you will be designated therein as a joint inventor.

As a named inventor you are entitled to inspect any paper in the file wrapper of the application, order copies of all or any part thereof (at a prepaid cost per 37 CFR 1.19) or make your position of record in the application. Alternatively, you may arrange to do any of the preceding through a registered patent attorney or agent presenting written authorization from you. If you care to join the application, the attorney of record below would presumably assist you. Joining in the application would entail the filing of an appropriate oath or declaration by you pursuant to 37 CFR 1.63.

Telephone inquiries regarding this communication should be directed to the undersigned at (571) 272-3225. Requests for information regarding your application should be directed to the File Information Unit at (703) 308-2733. Information regarding how to pay for and order a copy of the application, or a specific paper in the application, should be directed to the Certification Division at (703) 308-9726 or 1-800-972-6382 (outside the Washington D.C. area).

Paul Shanoski
Senior Attorney
Office of Petitions
United States Patent and Trademark Office

cc: Karen Smith Kienbaum & Associates
400 Monroe, Suite 470,
Detroit, Michigan 48226

WOOD, HERRON & EVANS, LLP (LEAR)
2700 CAREW TOWER
441 VINE STREET
CINCINNATI OH 45202

UNITED STATES PATENT AND TRADEMARK OFFICE

Commissioner for Patents
United States Patent and Trademark Office
P.O. Box 1450
Alexandria, VA 22313-1450
www.uspto.gov

Paper No. 082006

ZIOLKOWSKI PATENT SOLUTIONS GROUP, SC (ITW)
14135 NORTH CEDARBURG ROAD
MEQUON, WI 53097

SEP - 2 2006

In re Application of:	:	
Herbert A. Bankstahl	:	PETITION FOR SUPERVISORY
Serial No.: 10/711,475	:	AUTHORITY
Filed: September 21, 2004	:	UNDER 37 CFR § 1.144
Attorney Docket No.: ITW7510.088	:	
High-Power Electrical Quick Connector		

This is a decision on the petition filed on February 23, 2006 requesting Supervisory Authority review under 37 CFR 1.144 of the restriction requirement and direct the examiner to rejoin non-elected claims 16 – 105 and 109.

The petition is **GRANTED**.

Upon further review of the application and as pointed out by Petitioner, the arguments presented regarding the restriction and species requirements by Petitioner have not been addressed by the Examiner. Petitioner's request for rejoinder of all originally filed claims is granted.

The Office actions of November 23, 2005 and those subsequently issued are hereby vacated. No reply by the applicant to any issues raised by the Examiner is necessary or required at this time.

The Examiner is directed to prepare a new Office action. The Petitioner should note that the new Office action might include a proper restriction requirement under 35 USC 121.

Telephone inquires regarding this decision should be directed to Paula Bradley at (571) 272-2800 ext 33.

Richard K. Seidel, Director
Technology Center 2800
Semiconductors, Electrical and Optical
Systems and Components

UNITED STATES PATENT AND TRADEMARK OFFICE

COMMISSIONER FOR PATENTS
UNITED STATES PATENT AND TRADEMARK OFFICE
P.O. BOX 1450
ALEXANDRIA, VA 22313-1450
www.uspto.gov

COPY MAILED

SEP 28 2009

OFFICE OF PETITIONS

SUTHERLAND ASBILL &
BRENNAN LLP
999 PEACHTREE STREET, N.E.
ATLANTA GA 30309

In re Patent No. 7,521,387	:	
Xue, et al.	:	DECISION ON REQUEST FOR
Issue Date: April 21, 2009	:	RECONSIDERATION OF
Application No. 10/711,477	:	PATENT TERM ADJUSTMENT
Filed: September 21, 2004	:	
Attorney Docket No. 19441-0072	:	

This is in response to the "APPLICATION FOR PATENT TERM ADJUSTMENT UNDER 37 C.F.R.§1.705(d)," filed June 22, 2009, requesting that the patent term adjustment determination for the above-identified patent be changed from nine hundred twelve (912) days to one thousand twp hundred sixty-seven (1,267) days.

The request for reconsideration is granted to the extent that the determination has been reconsidered; however, the request for reconsideration of patent term adjustment is **DISMISSED** with respect to making any change in the patent adjustment determination under 35 U.S.C. § 154(b) of 912 days.

On April 21, 2009, the above-identified application matured into U.S. Patent No. 7,521,387 with a patent term adjustment of 912 days. This request for reconsideration of patent term adjustment (including the required fee) was timely filed within two months of the issue date of the patent. See 1.705(d).

Patentees request recalculation of the patent term adjustment based on the decision in *Wyeth v. Dudas*, 580 F. Supp. 2d 138, 88 U.S.P.Q. 2d 1538 (D.D.C. 2008). Patentees maintain that a portion of the period of adjustment due to the Three Year Delay by the Office, pursuant to 37 CFR § 1.703(b), 314 of the 578 days, and the period of adjustment due to examination delay, pursuant to 37 CFR §1.702(a), of 953 days do not overlap as these periods do not occur on the same day.

Patentees argue that the period of adjustment due to the Three Year Delay by the Office, pursuant to 37 CFR § 1.703(b), is 578 days. This 578 day period is calculated based on the application having been filed under 35 U.S.C. §111 on September 21, 2004, and the patent having not issued until April 21, 2009, 2009, three years and 578 days later. Patentees assert that in addition to this 578 day period, they are entitled to a period of adjustment due to examination delay, pursuant to 37 CFR §1.702(a) totalling 953 days.

This 953 day period is the sum of:

- a period of delay of 933 days for the failure by the Office to mail at least one of a notification under 35 U.S.C. 132 not later than fourteen months after the date on which the application was filed under 35 U.S.C. 111(a), pursuant to § 1.702(a)(1); and

- a period of delay of 20 days for the failure by the Office to respond to an amendment filed under 37 CFR 1.312, the filing of said amendment being necessitated by an obvious error introduced by and examiner's amendment.

Patentees are informed that the request for an additional adjustment of 20 days is not supported by the rules pertaining to patent term adjustment and is dismissed.

The period of reduction of 21 days for applicant delay is in dispute. Patentees assert that the February 6, 2009 amendment under 37 CFR 1.312 was filed to correct an obvious error introduced by the examiner's amendment, mailed January 9, 2009. As such, patentees argue that a 20 day adjustment, not a 21 day reduction, should be charged to the USPTO.

37 CFR § 1.704(c)(10) provides that:

> Submission of an amendment under § 1.312 or other paper after a notice of allowance has been given or mailed, in which case the period of adjustment set forth in § 1.703 shall be reduced by the lesser of:
>
> (i) The number of days, if any, beginning on the date the amendment under § 1.312 or other paper was filed and ending on the mailing date of the Office action or notice in

response to the amendment under § 1.312 or such other paper;

or

(ii) Four months;

As stated, in pertinent part, in MPEP 2732:

37 CFR 1.704(c)(10) establishes submission of an amendment under 37 CFR 1.312 or other paper after a notice of allowance has been given or mailed as a circumstance that constitutes a failure of an applicant to engage in reasonable efforts to conclude processing or examination of an application. The submission of amendments (or other papers) after an application is allowed may cause substantial interference with the patent issue process.

Certain papers filed after allowance are not considered to be a failure to engage in reasonable efforts to conclude processing or examination of an application. See *Clarification of 37 CFR 1.704(c)(10) - Reduction of Patent Term Adjustment for Certain Types of Papers Filed After a Notice of Allowance has been Mailed*, 1247 Off. Gaz. Pat. Office 111 (June 26, 2001). The submission of the following papers after a "Notice of Allowance" is not considered a failure to engage in reasonable efforts to conclude processing or examination of an application: (1) Fee(s) Transmittal (PTOL-85B); (2) Power of Attorney; (3) Power to Inspect; (4) Change of Address; (5) Change of Status (small/not small entity status); (6) a response to the examiner's reasons for allowance or a request to correct an error or omission in the "Notice of Allowance" or "Notice of Allowability;" and (7) letters related to government interests (e.g., those between NASA and the Office). Papers that will be considered a failure to engage in reasonable efforts to conclude processing or examination of an application include: (1) a request for a refund; (2) a status letter; (3) amendments under 37 CFR 1.312; (4) late priority claims; (5) a certified copy of a priority document; (6) drawings; (7) letters related to biologic deposits; and (8) oaths or declarations.

The filing of an amendment under 37 CFR 1.312 is explicitly listed as a paper that will be considered a failure to engage in reasonable efforts to conclude examination. Accordingly, the period of reduction of 21 days commenced February 6, 2009, the date the amendment was filed, and ended February 26, 2009, the date a response thereto was mailed.

Patentees assert that the total period of Office delay is the sum of the period of Three Years Delay (578 days) and the period of Examination Delay (953 days, per patentees' calculation) to the extent that these periods of delay are not overlapping. Patentees contend that 264 days overlap

Thus, patentees assert entitlement to an overall patent term adjustment of 1,267 days (933 + 314 + 20). Patentees alternatively assert entitlement to an overall patent term adjustment of 1,227 (933 + 314 - 20)

The Office asserts that the patent issued 3 years and 578 days after its filing date. The Office agrees that the action detailed above was not taken within the specified time frame, and thus, the entry of period of adjustment of 933 days is correct. At issue is whether patentees should accrue an additional 578 days of patent term adjustment for the Office taking in excess of three years to issue the patent, as well as, 933 days for Office failure to take a certain action within a specified time frame (or examination delay). The Office asserts that the overall adjustment is properly reduced 21 days for applicants' failure to engage in reasonable efforts to conclude processing pursuant to 37 CFR 1.704(c)(10).

Under 37 CFR § 1.703(f), patentees are entitled to a period of patent term adjustment equal to the period of delays based on the grounds set forth in 37 CFR §1.702 reduced by the period of time equal to the period of time during which applicants failed to engage in reasonable efforts to conclude prosecution pursuant to 37 CFR §1.704. In other words, the period of Office delay reduced by the period of applicant delay.

The Office contends that all 578 days overlap with the 933 period of Three Year Delay. Patentees' interpretation of the period of overlap has been considered and found to be incorrect. Patentees' calculation of the period of overlap is inconsistent with the Office's interpretation of this provision. 35 U.S.C. 154(b)(2)(A) limits the adjustment of patent term, as follows:

> To the extent that the periods of delay attributable to grounds specified in paragraph (1) overlap, the period of any adjustment granted under this subsection shall not exceed the actual number of days the issuance of the patent was delayed.

Likewise, 37 CFR 1.703(f) provides that:

> To the extent that periods of delay attributable to the grounds specified in §1.702 overlap, the period of adjustment granted under this section shall not exceed the actual number of days the issuance of the patent was delayed.

As explained in *Explanation of 37 CFR 1.703(f) and of the United States Patent and Trademark Office Interpretation of 35 U.S.C. 154(b)(2)(A)*, 69 Fed. Reg. 34283 (June 21, 2004), the Office interprets 35 U.S.C. 154(b)(2)(A) as permitting either patent term adjustment under 35 U.S.C. 154(b)(1)(A)(i)-(iv), or patent term adjustment under 35 U.S.C. 154(b)(1)(B), but not as permitting patent term adjustment under both 35 U.S.C. 154(b)(1)(A)(i)-(iv) and 154(b)(1)(B). Accordingly, the Office implements the overlap provision as follows:

> If an application is entitled to an adjustment under 35 U.S.C. 154(b)(1)(B), the entire period during which the application was pending (except for periods excluded under 35 U.S.C. 154(b)(1)(B)(i)-(iii)), and not just the period beginning three years after the actual filing date of the application, is the period of delay under 35 U.S.C. 154(b)(1)(B) in determining whether periods of delay overlap under 35 U.S.C. 154(b)(2)(A). Thus, any days of delay for Office issuance of the patent more than 3 years after the filing date of the application, which overlap with the days of patent term adjustment accorded prior to the issuance of the patent will not result in any additional patent term adjustment. See 35 U.S.C. 154(b)(1)(B), 35 U.S.C. 154(b)(2)(A), and 37 CFR § 1.703(f). See *Changes to Implement Patent Term Adjustment Under Twenty Year Term; Final Rule*, 65 Fed. Reg. 56366 (Sept. 18, 2000). See also *Revision of Patent Term Extension and Patent Term Adjustment Provisions; Final Rule*, 69 Fed. Reg. 21704 (April 22, 2004), 1282 Off. Gaz. Pat. Office 100 (May 18, 2004). See also *Explanation of 37*

> *CFR 1.703(f) and of the United States Patent and Trademark Office Interpretation of 35 U.S.C. 154(b)(2)(A)*, 69 Fed. Reg. 34283 (June 21, 2004).

The current wording of § 1.703(f) was revised in response to the misinterpretation of this provision by a number of applicants. The rule was slightly revised to more closely track the corresponding language of 35 U.S.C. 154(b)(2)(A). The relevant portion differs only to the extent that the statute refers back to provisions of the statute whereas the rule refers back to sections of the rule. This was not a substantive change to the rule nor did it reflect a change of the Office's interpretation of 35 U.S.C. 154(b)(2)(A). As stated in the *Explanation of 37 CFR 1.703(f) and of the United States Patent and Trademark Office Interpretation of 35 U.S.C. 154(b)(2)(A)*, the Office has consistently taken the position that if an application is entitled to an adjustment under the three-year pendency provision of 35 U.S.C. 154(b)(1)(B), the entire period during which the application was pending before the Office (except for periods excluded under 35 U.S.C. 154(b)(1)(B)(i)-(iii)), and not just the period beginning three years after the actual filing date of the application, is the relevant period under 35 U.S.C. 154(b)(1)(B) in determining whether periods of delay "overlap" under 35 U.S.C. 154(b)(2)(A).

This interpretation is consistent with the statute. Taken together the statute and rule provide that to the extent that periods of delay attributable to grounds specified in 35 U.S.C. 154(b)(1) and in corresponding §1.702 overlap, the period of adjustment granted shall not exceed the actual number of days the issuance of the patent was delayed. The grounds specified in these sections cover the A) guarantee of prompt Patent and Trademark Office responses, B) guarantee of no more than 3 year application pendency, and C) guarantee or adjustments for delays due to interference, secrecy orders and appeals. A section by section analysis of 35 U.S.C. 154(b)(2)(A) specifically provides that:

> Section 4402 imposes limitations on restoration of term. In general, pursuant to [35 U.S.C.] 154(b)(2)(A)-(C), total adjustments granted for restorations under [35 U.S.C. 154](b)(1) are reduced as follows: (1) To the extent that there are multiple grounds for extending the term of a patent that may exist simultaneously (e.g., delay due to a secrecy order under [35 U.S.C.] 181 and administrative

> delay under [35 U.S.C.] 154(b)(1)(A)), the term should not be extended for each ground of delay but only for the actual number of days that the issuance of a patent was delayed; See 145 Cong. Rec. S14,718[1]

As such, the period for over 3 year pendency does not overlap only to the extent that the actual dates in the period beginning three years after the date on which the application was filed overlap with the actual dates in the periods for failure of the Office to take action within specified time frames. In other words, consideration of the overlap does not begin three years after the filing date of the application.

In this instance, the relevant period under 35 U.S.C. 154(b)(1)(B) in determining whether periods of delay "overlap" under 35 U.S.C. 154(b)(2)(A) is the entire period during which the application was pending before the Office, September 21, 2004 to April 21, 2009. (There were no periods excluded under 35 U.S.C. 154(b)(1)(B)(i)-(iii)). 933 days of patent term adjustment were accorded prior to the issuance of the patent for the Office failing to respond within a specified time frame during the pendency of the application. During that time, the issuance of the patent was delayed by 933 days, not 933 + 578 days. The Office took 14 months and 933 days to issue a first Office action. Otherwise, the Office took all actions set forth in 37 C.F.R. § 1.702(a) within the prescribed timeframes. Nonetheless, given the initial 933 days of Office delay and the time allowed within the timeframes for processing and examination, and applicant delays, the patent issued, three years and 578 days after its filing date.

However, zero days of patent term adjustment was entered for the Office taking in excess of 3 years to issue the patent, since the period of delay of 578 days attributable to the delay in the issuance of the patent completely overlaps with the adjustment of 933 days attributable to ground specified in § 1.702(a)(1). Entry of both grounds is neither warranted nor permitted.

In view thereof, no adjustment to the patent term will be made.

---

[1] The AIPA is title IV of the Intellectual Property and Communications Omnibus Reform Act of 1999 (S. 1948), which was incorporated and enacted as law as part of Pub. L. 106-113. The Conference Report for H.R. 3194, 106th Cong. 1st Sess. (1999), which resulted in Pub. L. 106-113, does not contain any discussion (other than the incorporated language) of S. 1948. A section-by-section analysis of S. 1948, however, was printed in the Congressional Record at the request of Senator Lott, See 145 Cong. Rec. S14,708-26 (1999)(daily ed. Nov. 17, 1999).

The Office acknowledges submission of the $200.00 fee set forth in 37 CFR 1.18(e). No additional fees are required.

Telephone inquiries specific to this matter should be directed to Shirene Willis Brantley, Senior Petitions Attorney, at (571) 272-3230.

Alesia M. Brown
Senior Petitions Attorney
Office of the Deputy Commissioner
for Patent Examination Policy

UNITED STATES PATENT AND TRADEMARK OFFICE

Commissioner for Patents
United States Patent and Trademark Office
P.O. Box 1450
Alexandria, VA 22313-1450
www.uspto.gov
OIW dt-05

WOOD, HERRON & EVANS, LLP (LEAR)
2700 CAREW TOWER
441 VINE STREET
CINCINNATI OH 45202

COPY MAILED

JAN 25 2005

OFFICE OF PETITIONS

In re Application of	:	
Radu and Dry	:	
Application No. 10/711,480	:	DECISION ACCORDING STATUS
Filed: 21 September, 2004	:	UNDER 37 CFR 1.47(a)
Attorney Docket No. MASL-55	:	

This is in response to the petition filed under 37 CFR 1.47(a) on 29 December, 2004.

The petition is **GRANTED**.

Petitioners have shown that the non-signing inventor, Bogdan Radu, has refused to join in the filing of the above-identified application after having been sent a copy of the application papers. Specifically, petitioners have established that a copy of the application was sent to the non-signing inventor's counsel, Karen Smith Kienbaum. However, the non-signing inventor has failed to return a signed declaration listing him as a joint inventor along with Alan G. Dry.

The above-identified application and papers have been reviewed and found in compliance with 37 CFR 1.47(a). This application is hereby accorded Rule 1.47(a) status.

As provided in Rule 1.47(c), this Office will forward notice of this application's filing to the non-signing inventor at the address given in the Declaration. Notice of the filing of this application will also be published in the Official Gazette.

After this decision is mailed, the application will be referred to the Office of Initial Patent Examination for further processing.

Telephone inquiries related to this decision should be directed to the undersigned at 571-272-3231.

DWood

Douglas I. Wood
Senior Petitions Attorney
Office of Petitions

UNITED STATES PATENT AND TRADEMARK OFFICE

Commissioner for Patents
United States Patent and Trademark Office
P.O. Box 1450
Alexandria, VA 22313-1450
www.uspto.gov
DIW 01-05

Bogdan Radu
16011 Knollwood Drive
Dearborn MI 48120

COPY MAILED

JAN 25 2005

OFFICE OF PETITIONS

In re Application of
Radu et al.
Application No. 10/711,480
Filed: 21 September, 2004
For: AUTOMOTIVE STORAGE COMPARTMENT HAVING AN ELECTROLUMINESCENT LAMP AND METHOD OF MAKING THE SAME

Dear Mr. Radu:

You are named as a joint inventor in the above identified United States patent application, filed under the provisions of 35 U.S.C. 116 (United States Code), and 37 CFR 1.47(a), Rules of Practice in Patent Cases. Should a patent be granted on the application you will be designated therein as a joint inventor.

As a named inventor you are entitled to inspect any paper in the file wrapper of the application, order copies of all or any part thereof (at a prepaid cost per 37 CFR 1.19) or make your position of record in the application. Alternatively, you may arrange to do any of the preceding through a registered patent attorney or agent presenting written authorization from you. If you care to join the application, counsel of record (see below) would presumably assist you. Joining in the application would entail the filing of an appropriate oath or declaration by you pursuant to 37 CFR 1.63.

Telephone inquiries regarding this communication should be directed to the undersigned at 571/272-3231. Requests for information regarding your application should be directed to the File Information Unit at 703/308-2733. Information regarding how to pay for and order a copy of the application, or a specific paper in the application, should be directed to Certification Division at 703/308-9726 or 1-800-972-6382 (outside the Washington D.C. area).

D Wood

Douglas I. Wood
Senior Petitions Attorney
Office of Petitions

WOOD, HERRON & EVANS, LLP (LEAR)
2700 CAREW TOWER
441 VINE STREET
CINCINNATI OH 45202

UNITED STATES PATENT AND TRADEMARK OFFICE

COMMISSIONER FOR PATENTS
UNITED STATES PATENT AND TRADEMARK OFFICE
P.O. BOX 1450
ALEXANDRIA, VA 22313-1450
www.uspto.gov

BASF AG
CARL-BOSCH-STRASSE 38
6700 LUDWIGSHAFEN
RHEINLAND-PFATZ D-67056 67056
DE GERMANY

MAILED

MAR 30 2009

OFFICE OF PETITIONS

In re Patent No. 7,470,751	:	DECISION ON REQUEST
Taylor et al.	:	FOR
Issue Date: December 30, 2008	:	RECONSIDERATION OF
Application: 10/711,481	:	PATENT TERM ADJUSTMENT
Filed: September 21, 2004	:	
Attorney Docket No. JD-347	:	
Title: Stabilized Water-Borne Polymer Compositions For Use As Water-Based Coatings	:	

This is a decision on the "REQUEST FOR RECONSIDERATION OF PATENT TERM ADJUSTMENT UNDER 37 CFR §1.705(d)" filed December 31, 2008. Patentees request that the patent term adjustment indicated in the patent be corrected from six hundred seventy-nine (679) to nine hundred ninety-five (995) days.

The request for reconsideration of the patent term adjustment indicated on the patent is **DISMISSED**.

On December 30, 2008, the above-identified application matured into U.S. Patent No. 7,470,751. The instant request for reconsideration was timely filed within 2 months of the date the patent issued. See § 1.705(d). The Patent issued with a revised Patent Term Adjustment of 679 days. Patentees request correction of the patent term adjustment to increase the patent term adjustment to 995 days in that pursuant to 35 U.S.C. § 154(b) the Office failed to issue a patent within three years of the actual filing date of the above-referenced application in accordance with 37 CFR 1.702(b).

Patentees acknowledge that the ability to accumulate additional patent term adjustment against the three-year pendency ended with the filing of an RCE on August 12, 2008. The filing of the RCE does not otherwise affect PTA.

Patentees maintain that the total period of Office delay is the sum of the period of Three Years Delay (326 days) and the period of Examination Delay (669 days) to the extent that these periods of delay are not overlapping. Patentees request recalculation of the patent term adjustment based on the decision in Wyeth v. Dudas, 580 F. Supp. 2d 138, 88 U.S.P.Q. 2d 1538 (D.D.C. 2008). Patentees assert that pursuant to Wyeth, a PTO delay under §154(b)(1)(A) overlaps with a delay under §154(b)(1)(B) only if the delays "occur on the same day." Patentees maintain that the period of adjustment due to the Three Year Delay by the Office, pursuant to 37 CFR § 1.703(b), of 326 days and the period of adjustment due to examination delay, pursuant to 37 CFR §1.702(a), of 679 days do not overlap as these periods do not occur on the same day.

As such, patentees assert entitlement to a patent term adjustment of 995 days (326 + 669).

It is noted that patentees' calculation includes 669 days for examination delay. However, the correct number of days of examination delay prior to the issuance of the patent is 679 days.

The Office contends that the entire period of 326 days overlaps with the days of patent term adjustment accorded prior to the issuance of the patent. Patentees' interpretation of the period of overlap has been considered and found to be incorrect. Patentees' calculation of the period of overlap is inconsistent with the Office's interpretation of this provision. 35 U.S.C. 154(b)(2)(A) limits the adjustment of patent term, as follows:

> to the extent that the periods of delay attributable to grounds specified in paragraph (1) overlap, the period of any adjustment granted under this subsection shall not exceed the actual number of days the issuance of the patent was delayed.

Likewise, 37 CFR 1.703(f) provides that:

> To the extent that periods of delay attributable to the grounds specified in §1.702 overlap, the period of adjustment granted under this section shall not exceed the actual number of days the issuance of the patent was delayed.

As explained in *Explanation of 37 CFR 1.703(f) and of the United States Patent and Trademark Office Interpretation of 35 U.S.C. 154(b)(2)(A)*, 69 Fed. Reg. 34283 (June 21, 2004), the Office interprets 35 U.S.C. 154(b)(2)(A) as permitting either patent term adjustment under 35 U.S.C. 154(b)(1)(A)(i)-(iv), or patent term adjustment under 35 U.S.C. 154(b)(1)(B), but not as permitting patent term adjustment under both 35 U.S.C. 154(b)(1)(A)(i)-(iv) and 154(b)(1)(B). Accordingly, the Office implements the overlap provision as follows:

> If an application is entitled to an adjustment under 35 U.S.C. 154(b)(1)(B), the entire period during which the application was pending (except for periods excluded under 35 U.S.C. 154(b)(1)(B)(i)-(iii)), and not just the period beginning three years after the actual filing date of the application, is the period of delay under 35 U.S.C. 154(b)(1)(B) in determining whether periods of delay overlap under 35 U.S.C. 154(b)(2)(A). Thus, any days of delay for Office issuance of the patent more than 3 years after the filing date of the application, which overlap with the days of patent term adjustment accorded prior to the issuance of the patent will not result in any additional patent term adjustment. See 35 U.S.C. 154(b)(1)(B), 35 U.S.C. 154(b)(2)(A), and 37 CFR § 1.703(f). See *Changes to Implement Patent Term Adjustment Under Twenty Year Term; Final Rule*, 65 Fed. Reg. 54366 (Sept. 18, 2000). See also *Revision of Patent Term Extension and Patent Term Adjustment Provisions; Final Rule*, 69 Fed. Reg. 21704 (April 22, 2004), 1282 Off. Gaz. Pat. Office 100 (May 18, 2004). See also *Explanation of 37 CFR 1.703(f) and of the United States Patent and Trademark Office Interpretation of 35 U.S.C. 154(b)(2)(A)*, 69 Fed. Reg. 34283 (June 21, 2004).

The current wording of § 1.703(f) was revised in response to the misinterpretation of this provision by a number of applicants. The rule was slightly revised to more closely track the corresponding language of 35 U.S.C. 154(b)(2)(A). The relevant portion differs only to the extent that the statute refers back

to provisions of the statute whereas the rule refers back to sections of the rule. This was not a substantive change to the rule nor did it reflect a change of the Office's interpretation of 35 U.S.C. 154(b)(2)(A). As stated in the *Explanation of 37 CFR 1.703(f) and of the United States Patent and Trademark Office Interpretation of 35 U.S.C. 154(b)(2)(A)*, the Office has consistently taken the position that if an application is entitled to an adjustment under the three-year pendency provision of 35 U.S.C. 154(b)(1)(B), the entire period during which the application was pending before the Office (except for periods excluded under 35 U.S.C. 154(b)(1)(B)(i)-(iii)), and not just the period beginning three years after the actual filing date of the application, is the relevant period under 35 U.S.C. 154(b)(1)(B) in determining whether periods of delay "overlap" under 35 U.S.C. 154(b)(2)(A).

This interpretation is consistent with the statute. Taken together the statute and rule provide that to the extent that periods of delay attributable to grounds specified in 35 U.S.C. 154(b)(1) and in corresponding §1.702 overlap, the period of adjustment granted shall not exceed the actual number of days the issuance of the patent was delayed. The grounds specified in these sections cover the A) guarantee of prompt Patent and Trademark Office responses, B) guarantee of no more than 3 year application pendency, and C) guarantee or adjustments for delays due to interference, secrecy orders and appeals. A section by section analysis of 35 U.S.C. 154(b)(2)(A) specifically provides that:

> Section 4402 imposes limitations on restoration of term. In general, pursuant to [35 U.S.C.] 154(b)(2)(A)-(C), total adjustments granted for restorations under [35 U.S.C. 154](b)(1) are reduced as follows: (1) To the extent that there are multiple grounds for extending the term of a patent that may exist simultaneously (e.g., delay due to a secrecy order under [35 U.S.C.] 181 and administrative delay under [35 U.S.C.] 154(b)(1)(A)), the term should not be extended for each ground of delay but only for the actual number of days that the issuance of a patent was delayed; See 145 Cong. Rec. S14,718[1]

[1] The AIPA is title IV of the Intellectual Property and Communications Omnibus Reform Act of 1999 (S. 1948), which was incorporated and enacted as law as part of Pub. L. 106-113. The Conference Report for H.R. 3194, 106th Cong. 1st Sess. (1999), which resulted in Pub. L. 106-113, does not contain any discussion (other than the incorporated language) of S. 1948. A section-by-section analysis of S. 1948, however, was printed in the Congressional Record at the request of Senator Lott, See 145 Cong. Rec. S14,708-26 (1999)(daily ed. Nov. 17, 1999).

As such, the period for over 3 year pendency does not overlap only to the extent that the actual dates in the period beginning three years after the date on which the application was filed overlap with the actual dates in the periods for failure of the Office to take action within specified time frames. In other words, consideration of the overlap does not begin three years after the filing date of the application. Treating the relevant period as starting on September 21, 2007, the date that is 3 years after the actual filing date of the application is incorrect.

In this instance, the relevant period under 35 U.S.C. 154(b)(1)(B) in determining whether periods of delay "overlap" under 35 U.S.C. 154(b)(2)(A) is the entire period during which the application was pending before the Office until the filing of the RCE, September 21, 2004 to August 12, 2008. 679 days of patent term adjustment were accorded prior to the issuance of the patent for the Office failing to respond within specified time frames during the pendency of the application. All of the 326 days for Office delay in issuing the patent overlap with the 679 days. The issuance of the patent was delayed by 679 days, not 679 + 326 days. The Office took 14 months and 679 days to issue a first Office action. Otherwise, the Office took all actions set forth in 37 C.F.R. § 1.702(a) within the prescribed timeframes. Nonetheless, given the initial 679 days of Office delay and the time allowed within the timeframes for processing and examination, as of the filing date of the RCE, the application was pending three years and 326 days after its filing date. The Office did not delay 679 days and then an additional 326 days. Accordingly, 679 days of patent term adjustment (not 679 and 326 days) was properly entered since the period of delay of 326 days attributable to the delay in the issuance of the patent overlaps with the adjustment of 679 days attributable to grounds specified in § 1.702(a)(1). Entry of both periods is not warranted. 679 days is determined to be the actual number of days that the issuance of the patent was delayed, considering the 326 days over three years.

Accordingly, at issuance, the Office properly entered 0 days additional days of patent term adjustment for the Office taking in excess of 3 years to issue the patent.

In view thereof, the instant patent is not entitled to further adjustment.

Receipt of the $200.00 fee set forth in 37 CFR 1.18(e) is acknowledged. No additional fees are required.

The file does not indicate a change of address has been submitted, although the address given on the petition differs from the address of record. If appropriate, a change of address should be filed in accordance with MPEP 601.03. A courtesy copy of this decision is being mailed to the address given on the petition; however, the Office will mail all future correspondence solely to the address of record.

Telephone inquiries specific to this matter should be directed to Charlema Grant, Petitions Attorney, at (571) 272-3215.

Nancy Johnson
Senior Petitions Attorney
Office of Petitions

Cc: FOLEY & LARDNER LLP
150 EAST GILMAN STREET
P.O. BOX 1497
MADISON, WI 53701-1497

UNITED STATES PATENT AND TRADEMARK OFFICE

COMMISSIONER FOR PATENTS
UNITED STATES PATENT AND TRADEMARK OFFICE
P.O. BOX 1450
ALEXANDRIA, VA 22313-1450
www.uspto.gov

BASF AG
CARL-BOSCH-STRASSE 38
6700 LUDWIGSHAFEN
RHEINLAND-PFATZ D-67056 67056
DE GERMANY

MAILED

MAR 30 2009

OFFICE OF PETITIONS

In re Patent No. 7,470,751	: DECISION ON REQUEST
Taylor et al.	: FOR
Issue Date: December 30, 2008	: RECONSIDERATION OF
Application: 10/711,481	: PATENT TERM ADJUSTMENT
Filed: September 21, 2004	:
Attorney Docket No. JD-347	:
Title: Stabilized Water-Borne	:
Polymer Compositions For Use As	:
Water-Based Coatings	:

This is a decision on the "REQUEST FOR RECONSIDERATION OF PATENT TERM ADJUSTMENT UNDER 37 CFR §1.705(d)" filed December 31, 2008. Patentees request that the patent term adjustment indicated in the patent be corrected from six hundred seventy-nine (679) to nine hundred ninety-five (995) days.

The request for reconsideration of the patent term adjustment indicated on the patent is **DISMISSED**.

On December 30, 2008, the above-identified application matured into U.S. Patent No. 7,470,751. The instant request for reconsideration was timely filed within 2 months of the date the patent issued. See § 1.705(d). The Patent issued with a revised Patent Term Adjustment of 679 days. Patentees request correction of the patent term adjustment to increase the patent term adjustment to 995 days in that pursuant to 35 U.S.C. § 154(b) the Office failed to issue a patent within three years of the actual filing date of the above-referenced application in accordance with 37 CFR 1.702(b).

Patentees acknowledge that the ability to accumulate additional patent term adjustment against the three-year pendency ended with the filing of an RCE on August 12, 2008. The filing of the RCE does not otherwise affect PTA.

Patentees maintain that the total period of Office delay is the sum of the period of Three Years Delay (326 days) and the period of Examination Delay (669 days) to the extent that these periods of delay are not overlapping. Patentees request recalculation of the patent term adjustment based on the decision in Wyeth v. Dudas, 580 F. Supp. 2d 138, 88 U.S.P.Q. 2d 1538 (D.D.C. 2008). Patentees assert that pursuant to Wyeth, a PTO delay under §154(b)(1)(A) overlaps with a delay under §154(b)(1)(B) only if the delays "occur on the same day." Patentees maintain that the period of adjustment due to the Three Year Delay by the Office, pursuant to 37 CFR § 1.703(b), of 326 days and the period of adjustment due to examination delay, pursuant to 37 CFR §1.702(a), of 679 days do not overlap as these periods do not occur on the same day.

As such, patentees assert entitlement to a patent term adjustment of 995 days (326 + 669).

It is noted that patentees' calculation includes 669 days for examination delay. However, the correct number of days of examination delay prior to the issuance of the patent is 679 days.

The Office contends that the entire period of 326 days overlaps with the days of patent term adjustment accorded prior to the issuance of the patent. Patentees' interpretation of the period of overlap has been considered and found to be incorrect. Patentees' calculation of the period of overlap is inconsistent with the Office's interpretation of this provision. 35 U.S.C. 154(b)(2)(A) limits the adjustment of patent term, as follows:

> to the extent that the periods of delay attributable to grounds specified in paragraph (1) overlap, the period of any adjustment granted under this subsection shall not exceed the actual number of days the issuance of the patent was delayed.

Likewise, 37 CFR 1.703(f) provides that:

> To the extent that periods of delay attributable to the grounds specified in §1.702 overlap, the period of adjustment granted under this section shall not exceed the actual number of days the issuance of the patent was delayed.

As explained in *Explanation of 37 CFR 1.703(f) and of the United States Patent and Trademark Office Interpretation of 35 U.S.C. 154(b)(2)(A)*, 69 Fed. Reg. 34283 (June 21, 2004), the Office interprets 35 U.S.C. 154(b)(2)(A) as permitting either patent term adjustment under 35 U.S.C. 154(b)(1)(A)(i)-(iv), or patent term adjustment under 35 U.S.C. 154(b)(1)(B), but not as permitting patent term adjustment under both 35 U.S.C. 154(b)(1)(A)(i)-(iv) and 154(b)(1)(B). Accordingly, the Office implements the overlap provision as follows:

> If an application is entitled to an adjustment under 35 U.S.C. 154(b)(1)(B), the entire period during which the application was pending (except for periods excluded under 35 U.S.C. 154(b)(1)(B)(i)-(iii)), and not just the period beginning three years after the actual filing date of the application, is the period of delay under 35 U.S.C. 154(b)(1)(B) in determining whether periods of delay overlap under 35 U.S.C. 154(b)(2)(A). Thus, any days of delay for Office issuance of the patent more than 3 years after the filing date of the application, which overlap with the days of patent term adjustment accorded prior to the issuance of the patent will not result in any additional patent term adjustment. See 35 U.S.C. 154(b)(1)(B), 35 U.S.C. 154(b)(2)(A), and 37 CFR § 1.703(f). See *Changes to Implement Patent Term Adjustment Under Twenty Year Term; Final Rule*, 65 Fed. Reg. 54366 (Sept. 18, 2000). See also *Revision of Patent Term Extension and Patent Term Adjustment Provisions; Final Rule*, 69 Fed. Reg. 21704 (April 22, 2004), 1282 Off. Gaz. Pat. Office 100 (May 18, 2004). See also *Explanation of 37 CFR 1.703(f) and of the United States Patent and Trademark Office Interpretation of 35 U.S.C. 154(b)(2)(A)*, 69 Fed. Reg. 34283 (June 21, 2004).

The current wording of § 1.703(f) was revised in response to the misinterpretation of this provision by a number of applicants. The rule was slightly revised to more closely track the corresponding language of 35 U.S.C. 154(b)(2)(A). The relevant portion differs only to the extent that the statute refers back

to provisions of the statute whereas the rule refers back to sections of the rule. This was not a substantive change to the rule nor did it reflect a change of the Office's interpretation of 35 U.S.C. 154(b)(2)(A). As stated in the *Explanation of 37 CFR 1.703(f) and of the United States Patent and Trademark Office Interpretation of 35 U.S.C. 154(b)(2)(A)*, the Office has consistently taken the position that if an application is entitled to an adjustment under the three-year pendency provision of 35 U.S.C. 154(b)(1)(B), the entire period during which the application was pending before the Office (except for periods excluded under 35 U.S.C. 154(b)(1)(B)(i)-(iii)), and not just the period beginning three years after the actual filing date of the application, is the relevant period under 35 U.S.C. 154(b)(1)(B) in determining whether periods of delay "overlap" under 35 U.S.C. 154(b)(2)(A).

This interpretation is consistent with the statute. Taken together the statute and rule provide that to the extent that periods of delay attributable to grounds specified in 35 U.S.C. 154(b)(1) and in corresponding §1.702 overlap, the period of adjustment granted shall not exceed the actual number of days the issuance of the patent was delayed. The grounds specified in these sections cover the A) guarantee of prompt Patent and Trademark Office responses, B) guarantee of no more than 3 year application pendency, and C) guarantee or adjustments for delays due to interference, secrecy orders and appeals. A section by section analysis of 35 U.S.C. 154(b)(2)(A) specifically provides that:

> Section 4402 imposes limitations on restoration of term. In general, pursuant to [35 U.S.C.] 154(b)(2)(A)-(C), total adjustments granted for restorations under [35 U.S.C. 154](b)(1) are reduced as follows: (1) To the extent that there are multiple grounds for extending the term of a patent that may exist simultaneously (e.g., delay due to a secrecy order under [35 U.S.C.] 181 and administrative delay under [35 U.S.C.] 154(b)(1)(A)), the term should not be extended for each ground of delay but only for the actual number of days that the issuance of a patent was delayed; See 145 Cong. Rec. S14,718[1]

[1] The AIPA is title IV of the Intellectual Property and Communications Omnibus Reform Act of 1999 (S. 1948), which was incorporated and enacted as law as part of Pub. L. 106-113. The Conference Report for H.R. 3194, 106th Cong. 1st Sess. (1999), which resulted in Pub. L. 106-113, does not contain any discussion (other than the incorporated language) of S. 1948. A section-by-section analysis of S. 1948, however, was printed in the Congressional Record at the request of Senator Lott, See 145 Cong. Rec. S14,708-26 (1999)(daily ed. Nov. 17, 1999).

As such, the period for over 3 year pendency does not overlap only to the extent that the actual dates in the period beginning three years after the date on which the application was filed overlap with the actual dates in the periods for failure of the Office to take action within specified time frames. In other words, consideration of the overlap does not begin three years after the filing date of the application. Treating the relevant period as starting on September 21, 2007, the date that is 3 years after the actual filing date of the application is incorrect.

In this instance, the relevant period under 35 U.S.C. 154(b)(1)(B) in determining whether periods of delay "overlap" under 35 U.S.C. 154(b)(2)(A) is the entire period during which the application was pending before the Office until the filing of the RCE, September 21, 2004 to August 12, 2008. 679 days of patent term adjustment were accorded prior to the issuance of the patent for the Office failing to respond within specified time frames during the pendency of the application. All of the 326 days for Office delay in issuing the patent overlap with the 679 days. The issuance of the patent was delayed by 679 days, not 679 + 326 days. The Office took 14 months and 679 days to issue a first Office action. Otherwise, the Office took all actions set forth in 37 C.F.R. § 1.702(a) within the prescribed timeframes. Nonetheless, given the initial 679 days of Office delay and the time allowed within the timeframes for processing and examination, as of the filing date of the RCE, the application was pending three years and 326 days after its filing date. The Office did not delay 679 days and then an additional 326 days. Accordingly, 679 days of patent term adjustment (not 679 and 326 days) was properly entered since the period of delay of 326 days attributable to the delay in the issuance of the patent overlaps with the adjustment of 679 days attributable to grounds specified in § 1.702(a)(1). Entry of both periods is not warranted. 679 days is determined to be the actual number of days that the issuance of the patent was delayed, considering the 326 days over three years.

Accordingly, at issuance, the Office properly entered 0 days additional days of patent term adjustment for the Office taking in excess of 3 years to issue the patent.

In view thereof, the instant patent is not entitled to further adjustment.

Receipt of the $200.00 fee set forth in 37 CFR 1.18(e) is acknowledged. No additional fees are required.

The file does not indicate a change of address has been submitted, although the address given on the petition differs from the address of record. If appropriate, a change of address should be filed in accordance with MPEP 601.03. A courtesy copy of this decision is being mailed to the address given on the petition; however, the Office will mail all future correspondence solely to the address of record.

Telephone inquiries specific to this matter should be directed to Charlema Grant, Petitions Attorney, at (571) 272-3215.

Nancy Johnson
Senior Petitions Attorney
Office of Petitions

Cc: FOLEY & LARDNER LLP
150 EAST GILMAN STREET
P.O. BOX 1497
MADISON, WI 53701-1497

UNITED STATES PATENT AND TRADEMARK OFFICE

Commissioner for Patents
United States Patent and Trademark Office
P.O. Box 1450
Alexandria, VA 22313-1450
www.uspto.gov

BASF AG
CARL-BOSCH-STRASSE 38
6700 LUDWIGSHAFEN
RHEINLAND-PFATZ D-67056 67056 DE GERMANY

MAILED

MAR 23 2010

OFFICE OF PETITIONS

In re Patent No. 7,470,751 :
Taylor et al. : DECISION ON REQUEST FOR
Issue Date: December 30, 2008 : RECONSIDERATION OF
Application No. 10/711,481 : PATENT TERM ADJUSTMENT
Filed: September 21, 2004 : AND NOTICE OF INTENT
Attorney Docket No. JD-347 : TO ISSUE CERTIFICATE OF
Title: STABILIZED WATER-BORNE : CORRECTION
POLYMER COMPOSITIONS FOR USE AS :
WATER-BASED COATINGS :

This is a decision on the petition under 37 CFR 1.181 filed on May 29, 2009, requesting that the patent term adjustment indicated on the above-identified patent be corrected to indicate that the term of the above-identified patent is extended or adjusted by nine hundred ninety-five (995) days. The petition was filed within two months of a decision by the Office mailed on March 30, 2009 dismissing applicants' request for reconsideration of PTA under 37 CFR 1.705(d).

The petition to correct the patent term adjustment indicated on the above-identified patent to indicate that the term of the above-identified patent is extended or adjusted by nine hundred ninety-four (994) days is **GRANTED to the extent indicated herein.**

As the period from the filing date of the request for continued examination (RCE) to the issue date of the patent is not included in the "B" delay period, the over three year period begins on September 22, 2007 and ends on August 11, 2008, the day before the RCE was filed, and is 325 days. See 35 U.S.C. 154(b)(1)(B)(i). There are 10 days which overlap. As such, the patent term adjustment is 994, not 995 days.

The address given on the petition differs from the address of record. If appropriate, a change of address should be filed in

accordance with MPEP 601.03. A courtesy copy of this decision is being mailed to the address given on the petition; however, the Office will mail all future correspondence solely to the address of record.

The Office will *sua sponte* issue a certificate of correction. Pursuant to 37 CFR 1.322, the Office will not issue a certificate of correction without first providing assignee or patentee an opportunity to be heard. Accordingly, patentees are given **one (1) month or thirty (30) days**, whichever is longer, from the mail date of this decision to respond. No extensions of time will be granted under § 1.136.

The Office acknowledges submission of the $200.00 fee set forth in 37 CFR 1.18(e). No additional fees are required.

The application is being forwarded to the Certificates of Branch for issuance of a certificate of correction. The Office will issue a certificate of correction indicating that the term of the above-identified patent is extended or adjusted by **nine hundred ninety-four (994)** days.

Telephone inquiries specific to this matter should be directed to Petitions Attorney, Charlema Grant at (571) 272-3215.

/ALESIA M. BROWN/

Alesia M. Brown
Petitions Attorney
Office of Petitions

Enclosure: Copy of DRAFT Certificate of Correction

Cc: FOLEY & LARDNER LLP
150 EAST GILMAN STREET
P.O. BOX 1497
MADISON, WI 53701-1497

UNITED STATES PATENT AND TRADEMARK OFFICE

CERTIFICATE OF CORRECTION

PATENT : 7,470,751 B2

DATED : **December 30, 2008** **DRAFT**

INVENTOR(S) : Taylor et al.

It is certified that error appears in the above-identified patent and that said Letters Patent is hereby corrected as shown below:

On the cover page,

[*] Notice: Subject to any disclaimer, the term of this patent is extended or adjusted under 35 USC 154(b) by 679 days

Delete the phrase "by 679 days" and insert – by 994 days--

SPE RESPONSE FOR CERTIFICATE OF CORRECTION

Paper No.: _____

DATE : June 22, 2006

TO SPE OF : ART UNIT 2618

SUBJECT : Request for Certificate of Correction for Appl. No.: 10/711,490 Patent No.: 7,031,728

Please respond to this request for a certificate of correction within 7 days.

Please review the requested changes/corrections as shown in the **COCIN** document(s) in the IFW application image. No new matter should be introduced, nor should the scope or meaning of the claims be changed.

Please complete the response (see below) and forward the completed response to scanning using document code **COCX**.

Magdalene Talley

Certificates of Correction Branch

703-308-9390 ext. 116

Thank You For Your Assistance

The request for issuing the above-identified correction(s) is hereby:

Note your decision on the appropriate box.

☒ **Approved**	**All** changes apply.
☐ **Approved in Part**	Specify below which changes **do not** apply.
☐ **Denied**	State the reasons for denial below.

Comments: _____

EDWARD F. URBAN
SUPERVISORY PATENT EXAMINER
TECHNOLOGY CENTER 2600
SPE

2618
Art Unit

UNITED STATES PATENT AND TRADEMARK OFFICE

UNITED STATES DEPARTMENT OF COMMERCE
United States Patent and Trademark Office
Address: COMMISSIONER FOR PATENTS
P.O. Box 1450
Alexandria, Virginia 22313-1450
www.uspto.gov

FORD GLOBAL TECHNOLOGIES, LLC
FAIRLANE PLAZA SOUTH, SUITE 800
330 TOWN CENTER DRIVE
DEARBORN, MI 48126

Mail Date: 04/21/2010

Applicant	: Mark Yamazaki	: DECISION ON REQUEST FOR
Patent Number	: 7605561	: RECALCULATION of PATENT
Issue Date	: 10/20/2009	: TERM ADJUSTMENT IN VIEW
Appliction No	: 10/711,499	: OF WYETH AND NOTICE OF INTENT TO
Filed	: 09/22/2004	: ISSUE CERTIFICATE OF CORRECTION
		:

The Request for Recalculation is **GRANTED** to the extent indicated.

The patent term adjustment has been determined to be **1025** days. The USPTO will *sua sponte* issue a certificate of correction reflecting the amount of PTA days determined by the recalculation.

Prior to the issuance of the certificate of correction, the USPTO will afford patentee an opportunity to be heard and request reconsideration. Accordingly, patentee has **one month or thirty (30) days**, whichever is longer, to file a request for reconsideration of this patent term adjustment calculation. See 35 U.S.C. 154(b)(3)(B)(ii) and 37 CFR 1.322(a)(4). No extensions of time will be granted under 37 CFR 1.136.

Patentee should use document code PET.OP if electronically filing a request for reconsideration of this patent term adjustment calculation. The patentee must also include the information required by 37 CFR 1.705(b)(2) and the fee required by 37 CFR 1.18(e). If patentee does not file a timely request for reconsideration of this patent term adjustment calculation including the information required by 37 CFR 1.705(b)(2) and the fee required by 37 CFR 1.18(e), the USPTO will issue a certificate of correction reflecting the PTA determination noted above.

Patentee should be aware that in order to preserve the right to review in the United States District Court for the District of Columbia of the USPTO patent term adjustment determination, patentee must ensure that he or she also take the steps required under 35 U.S.C. 154(b)(4)(A) in a timely manner. Nothing in the request for recalculation should be construed as providing an alternative time frame for commencing a civil action under 35 U.S.C. 154(b)(4)(A).

Any questions concerning this decision should be directed to the Office of Patent Legal Administration at 571-272-7702.

UNITED STATES PATENT AND TRADEMARK OFFICE

Commissioner for Patents
United States Patent and Trademark Office
P.O. Box 1450
Alexandria, VA 22313-1450
www.uspto.gov

MOORE & VAN ALLEN PLLC
P.O. BOX 13706
RESEARCH TRIANGLE PARK NC 27709

COPY MAILED

JUN 15 2005

OFFICE OF PETITIONS

In re Application of
Patrick S. McMonagle et al.
Application No. 10/711,550
Filed: September 24, 2004
Attorney Docket No. 030848-026

: DECISION ACCORDING STATUS
: UNDER 37 CFR 1.47(a)

This is in response to the petition filed March 7, 2005 under 37 CFR 1.47(a).

The petition under 37 CFR 1.47(a) is **GRANTED**.

The above-identified application was filed on September 24, 2004, without an oath or declaration. Accordingly, on October 20, 2004, a "Notice To File Missing Parts of Application" was mailed, requiring *inter alia* a properly executed oath or declaration.

In response, the instant petition under 37 CFR 1.47(a), an oath or declaration naming Patrick S. McMonagle, Douglas G. Smith and Richard L. Norman as joint inventors but only executed by inventors McMonagle and Smith, late filing surcharge and a request for a three month extension of time were filed. The petition argues that joint inventor Norman refuses to sign the oath or declaration and thus by his actions, to cooperate with the filing of the instant application.

A grantable petition under 37 CFR 1.47(a) requires: (1) proof that the non-signing inventor cannot be reached or refuses to sign the oath or declaration after having been presented with the application papers (specification, claims and drawings); (2) an acceptable oath or declaration in compliance with 35 U.S.C. §§ 115 and 116; (3) the petition fee; and (4) a statement of the last known address of the non-signing inventor.

The petition bears proof that the application papers were forwarded to and received by Mr. Norman and that to date, he has not returned an executed copy of the oath or declaration.

The above-identified application and papers have been reviewed and found in compliance with 37 CFR 1.47(a). In view thereof, this application is hereby accorded Rule 1.47(a) status.

Thus, as provided in Rule 1.47c, this Office will forward notice of this application's filing to the non-signing inventor at the address given in the petition. Notice of the filing of this application will also be published in the Official Gazette.

Please be advised that effective November 22, 2004, the petition fee has been increased to $200.00. Therein, deposit account no. 13-4365 has been charged in the amount of $70.00 to make up the difference between that which was paid and that which is due pursuant to 37 CFR 1.17(g). See the Notice published in the Federal Register on September 21, 2004 and in the Official Gazette of the United States Patent and Trademark Office on October 12, 2004.

The application is being returned to the Office of Initial Patent Examination for further pre-examination processing.

Telephone inquiries concerning this matter may be directed to the undersigned Petitions Attorney at (571) 272-3212.

Patricia Faison-Ball

Patricia Faison-Ball
Senior Petitions Attorney
Office of Petitions

UNITED STATES PATENT AND TRADEMARK OFFICE

Commissioner for Patents
United States Patent and Trademark Office
P.O. Box 1450
Alexandria, VA 22313-1450
www.uspto.gov

RICHARD L. NORMAN
4040 LOMITA LANE
DALLAS, TX 75220

COPY MAILED

JUN 15 2005

OFFICE OF PETITIONS

In re Application of
Patrick S. Mcmonagle
Application No. 10/711,550
Filed: September 24, 2004
For: CENTRALIZED CHECK IMAGE STORAGE SYSTEM

Dear Mr. Norman:

You are named as a joint inventor in the above identified United States patent application, filed under the provisions of 35 U.S.C. 116 (United States Code), and 37 CFR 1.47(a), Rules of Practice in Patent Cases. Should a patent be granted on the application you will be designated therein as a joint inventor.

As a named inventor you are entitled to inspect any paper in the file wrapper of the application, order copies of all or any part thereof (at a prepaid cost per 37 CFR 1.19) or make your position of record in the application. Alternatively, you may arrange to do any of the preceding through a registered patent attorney or agent presenting written authorization from you. If you care to join the application, counsel of record (see below) would presumably assist you. Joining in the application would entail the filing of an appropriate oath or declaration by you pursuant to 37 CFR 1.63.

Telephone inquiries regarding this communication should be directed to the undersigned Petitions Attorney at (571) 272-3212. Requests for information regarding your application should be directed to the File Information Unit at 703/308-2733. Information regarding how to pay for and order a copy of the application, or a specific paper in the application, should be directed to Certification Division at 703/308-9726 or 1-800-972-6382 (outside the Washington D.C. area).

Patricia Faison-Ball
Senior Petitions Attorney
Office of Petitions

cc:

MOORE & VAN ALLEN PLLC
P.O. BOX 13706
RESEARCH TRIANGLE PARK NC 27709

UNITED STATES PATENT AND TRADEMARK OFFICE

Commissioner for Patents
United States Patent and Trademark Office
P.O. Box 1450
Alexandria, VA 22313-1450
www.uspto.gov

COPY MAILED

OCT 28 2009

OFFICE OF PETITIONS

MOORE & VAN ALLEN PLLC
P.O. BOX 13706
Research Triangle Park NC 27709

In re Application of :
McMonagle et al. :
Application No. 10/711,550 : DECISION ON PETITION
Filed: September 24, 2004 :
Attorney Docket No. 030848-00026 :

This is a decision on the petition under 37 CFR 1.183 to waive 37 CFR 1.131 to the extent that it requires that all of the named inventors execute the declaration filed under 37 CFR 1.131 and the petition under 37 CFR 1.137(b) to revive the above-identified application, which were both filed February 9, 2009.

The petitions are **GRANTED**.

In regard to the petition under 37 CFR 1.183, petitioners assert that, while all of the named inventors contributed to the conception of the claimed invention which is under rejection, only Patrick S. McMonagle has agreed to execute the attached declaration under 37 CFR 1.131 in support of establishing conception of the claimed invention prior to August 5, 2003.

As noted in MPEP 715.04, an adequate showing may lead to acceptance of a declaration under 37 CFR 1.131 executed by less than all the named inventors of the claimed subject matter in question. Here, efforts were made to obtain a signature from inventor Douglas G. Smith for the declaration under 37 CFR 1.131 and the above-identified application was granted status under 37 CFR 1.47(a) on June 15, 2005 for earlier efforts to obtain participation from inventor Richard L. Norman. Under the facts presented, it is agreed that justice requires waiver of the rules to the extent that they require Douglas G. Smith and Richard L. Norman to declare. However, the favorable decision herein does not relieve applicants from their burden to establish that the invention was completed before the date of the reference and that the claimed invention was the product of the joint inventors. See In re Carlson, 79 F.2d. 900, 27 USPQ 400 (CCPA 1935).

In regard to the petition under 37 CFR 1.137(b), the application became abandoned for failure to reply in a timely manner to the non-final Office action mailed, July 15, 2008, which set a shortened statutory period for reply of three (3) months. No extensions of time under the provisions of 37 CFR 1.136(a) were obtained. Accordingly, the application became abandoned on October 16, 2008. A Notice of Abandonment was mailed on September 17, 2009.

The petition satisfies the requirements of 37 CFR 1.137(b) in that petitioner has supplied (1) the reply in the form of a declaration under 37 CFR 1.131 and arguments, (2) the petition fee of $1620.00; and (3) an adequate statement of unintentional delay.

This application is being referred to Technology Center AU 3696 for appropriate action in the normal course of business on the reply received on February 9, 2009.

Any questions concerning this matter may be directed to the undersigned at (571) 272-6692. Inquiries concerning the examination or status of the application should be directed to the Technology Center.

Christopher Bottorff
Petitions Examiner
Office of Petitions

UNITED STATES PATENT AND TRADEMARK OFFICE

Commissioner for Patents
United States Patent and Trademark Office
P.O. Box 1450
Alexandria, VA 22313-1450
www.uspto.gov

Date: 02/10/09

Patent No. : 7448477 B2
Ser. No. : 10/711,578
Inventor(s) : KINGSTON, TIMOTHY
Issued : 11/11/08
Title : **DEVICE FOR DISPLACING AN OBJECT A CERTAIN DISTANCE**
Docket No. : **6730.059.PCUS00**

Re: Request for Certificate of Correction

Consideration has been given your request for the issuance of a certificate of correction for the above-identified patent under the provisions of Rule(s) 1.322 and/or 1.323.

Assignees' names and addresses (assignment data) printed in a patent, are based *solely* on information supplied in the appropriate space for identifying the assignment data, i.e., item 3 of the Issue Fee Transmittal Form PTOL-85B. Granting of a request under 37 CFR 3.81(b) is required to correct applicant's error providing ***incorrect or erroneous*** assignment data, *before* issuance of a Certificate of Correction, under 37 CFR 1.323 *(see Manual of Patent Examining Procedures (M.P.E.P) Chp.1400, sect. 1481).* This procedure is required *at any time after the issue fee is paid*, including after issuance of the patent.

In view of the foregoing, your request, in this mater, is hereby denied.

A request to correct the Assignee under 37 CFR 3.81(b) should include:

A. **the processing fee set forth in 37 CFR 1.117(h) (currently $130);**
B. a statement that the failure to include the correct assignee name on the PTOL-85B was inadvertent; and
C. a copy of the Notice of Recordation of Assignment Document, reflecting the reel and frame number where the assignment(s) is recorded and/or reflecting proof of *the date* the assignment was submitted for recordation.

In the Request, Applicant(s) may request that the file be forwarded to Certificates of Correction Branch, for issuance of a Certificate of Correction, if the Request is granted.

Any request under 37 CFR 3.81(b) should be directed to the following address or facsimile number:

By mail: Mail Stop PETITIONS
Commissioner for Patents
Post Office Box 1450
Alexandria, VA 22313-1450

By hand: Customer Service Window
Mail Stop Petitions
Randolph Building
401 Dulany Street
Alexandria, VA 22314

By fax: (571) 273-0025
ATTN: Office of Petitions

If a fee (currently $100) was previously submitted for consideration of a Request for Certificate of Correction, under CFR 1.323, to correct assignment data, no additional fee is required.

Lamonte M. Newsome

Lamonte M. Newsome
For Mary Diggs, Supervisor
Decisions & Certificates
Of Correction Branch
(703) 305-8309 or (703) 308-9390 #112

NOVAK DRUCE AND QUIGG LLP (Volvo)
1000 LOUISIANA STREET
FIFTY-THIRD FLOOR
HOUSTON TX 77002

LMN

UNITED STATES PATENT AND TRADEMARK OFFICE

Commissioner for Patents
United States Patent and Trademark Office
P.O. Box 1450
Alexandria, VA 22313-1450
www.uspto.gov

NOVAK DRUCE AND QUIGG LLP (Volvo)
1000 LOUISIANA STREET
FIFTY-THIRD FLOOR
HOUSTON TX 77002

MAILED

MAY 19 2010

OFFICE OF PETITIONS

In re Patent No. 7,448,477 :
Issue Date: November 11, 2008 :
Application No. 10/711,578 : DECISION ON PETITION
Filed: September 26, 2004 :
Attorney Docket No. 6630.059.PCUS00 :

This is a decision on the Certificate Of Correction Request, filed March 18, 2010, requesting correction on the Title Page of the subject patent to identify the correct assignee's name. The Request is being treated as a Petition. A completed Certificate of Correction Form (PTO/SB/44) was submitted.

The petition under 37 CFR 3.81 is **GRANTED**.

Petitioner urges that the present Petition was submitted to correct the error in the assignee's name on the previously submitted PTOL 85B and that such error to be corrected was inadvertent. Accordingly, petitioner requests, in effect, that a Certificate of Correction (PTO/SB/44) be issued the correct name of the assignee to the Title Page of the Letters Patent.

37 CFR 3.81(b), effective June 25, 2004, reads:

> *After payment of the issue fee:* Any request for issuance of an application in the name of the assignee submitted after the date of payment of the issue fee, and any request for a patent to be corrected to state the name of the assignee, must state that the assignment was submitted for recordation as set forth in § 3.11 before issuance of the patent, and must include a request for a certificate of correction under § 1.323 of this chapter (accompanied by the fee set forth in § 1.20(a) and the processing fee set forth in § 1.17(i) of this chapter.

The requisite $100.00 fee (Fee Code 1811) as set forth under 37 CFR 1.20(a) and the $130.00 processing fee (Fee Code 1464) as set forth under 37 CFR 1.17(i) were submitted with the Petition. Further, Office assignment records are consistent with the requested correction. Accordingly, since the Petition complies with the provisions of 37 CFR 3.81(b), it is appropriate

for the Office may have to issue a Certificate of Correction in accordance with the content of the Form (PTO/SB/44) that was submitted.

Inquiries related this communication should be directed to Cheryl Gibson-Baylor at (571)272-3213.

Any questions concerning the issuance of a Certificate of Correction should be directed to the Certificates of Correction Branch at (571) 272-4200.

This matter is being referred to the Certificates of Correction Branch for processing of a Certificate of Correction in U.S. Patent No. 7,448,477.

Brian W. Brown
Petitions Examiner
Office of Petitions

UNITED STATES PATENT AND TRADEMARK OFFICE

Commissioner for Patents
United States Patent and Trademark Office
P.O. Box 1450
Alexandria, VA 22313-1450
www.uspto.gov
DIW Jan-06

KEVIN G. MIERZWA
ARTZ & ARTZ, P.C.
28333 TELEGRAPH ROAD, SUITE 250
SOUTHFIELD MI 48034

COPY MAILED

JAN 0 9 2006

OFFICE OF PETITIONS

In re Application of	:	
Radu and Dry	:	DECISION ON PETITION AND
Application No. 10/711,587	:	DECISION REFUSING STATUS
Filed: 27 September, 2004	:	UNDER 37 CFR 1.47(a)
Atty Docket No.		
05116 (LC 0171 PUS)	:	
	:	

This is in response to the petitions under 37 CFR 1.137(b)[1] and 37 CFR 1.47(a) on filed on 6 September, 2005.

The petitions are **DISMISSED**.

Rule 47 applicant is given TWO MONTHS from the mailing date of this decision to reply, correcting the below-noted deficiencies. Any reply should be entitled "Request for Reconsideration of Petition Under 37 CFR 1.47(a)," and should only address the deficiencies noted below, except that the reply may include an oath or declaration executed by the non-signing inventor.

---

[1] Effective December 1, 1997, the provisions of 37 CFR 1.137(b) now provide that where the delay in reply was unintentional, a petition may be filed to revive an abandoned application or a lapsed patent pursuant to 37 CFR 1.137(b). A grantable petition filed under the provisions of 37 CFR 1.137(b) must be accompanied by:

(1) the required reply, unless previously filed. In a nonprovisional application abandoned for failure to prosecute, the required reply may be met by the filing of a continuing application. In a nonprovisional application filed on or after June 8, 1995, and abandoned for failure to prosecute, the required reply may also be met by the filing of a request for continued examination in compliance with § 1.114. In an application or patent, abandoned or lapsed for failure to pay the issue fee or any portion thereof, the required reply must be the payment of the issue fee or any outstanding balance thereof. In an application abandoned for failure to pay the publication fee, the required reply must include payment of the publication fee.

(2) the petition fee as set forth in 37 CFR 1.17(m);

(3) a statement that the entire delay in filing the required reply from the due date for the reply until the filing of a grantable petition pursuant to 37 CFR 1.137(b) was unintentional. The Commissioner may required additional information where there is a question whether the delay was unintentional; and

(4) any terminal disclaimer (and fee as set forth in 37 CFR 1.20(d)) required pursuant to 37 CFR 1.137(c)).

Extensions of time may be obtained in accordance with 37 CFR 1.136(a).

The application became abandoned on 21 December, 2004, for failure to timely file a reply to the Notice to File Missing Parts of Nonprovisional Application mailed on 20 October, 2004, which required an executed oath or declaration and a surcharge for its late filing. The Notice set a two (2) month shortened period for reply. No extensions of time in accordance with 37 CFR 1.136(a) were obtained. Notice of Abandonment was mailed on 6 July, 2005.

On 6 September, 2005, the present petition under 37 CFR 1.137(b) was filed, along with a declaration naming Bogdan Radu and Alan George William Dry as joint inventors and signed by joint inventor Dry, and a petition under 37 CFR 1.47(a).

Petition Under 37 CFR 1.47(a)

Petitioners assert that a copy of the application and declaration were sent to joint inventor Radu, but that Radu has failed to sign and return the declaration naming him as a joint inventor along with joint inventor Dry. Petitioners have further provided a copy of a cover letter transmitting the declaration and a power of attorney to Radu, dated 7 January, 2005, as well as an E-mail from Jo Anne Croskey, assistant to registered patent attorney Jeffrey J. Chapp, transmitting the declaration and assignment to Radu.

It is noted that a grantable petition under 37 CFR 1.47(a) requires:

(1) proof that the non-signing inventor cannot be reached or located, notwithstanding diligent effort, or refuses to sign the oath or declaration after having been presented with the application papers (specification, claims and drawings);
(2) an acceptable oath or declaration in compliance with 35 U.S.C. §§ 115 and 116;
(3) the petition fee;
(4) a surcharge of $130 or $65 (small entity) if the petition and/or declaration is not filed at the time of filing the application, and
(5) a statement of the last known address of the non-signing inventor.

The petition lacks item (1).

With regard to item (1), petitioners have not provided proof that the non-signing inventor was ever sent or presented with a copy of the application as filed (specification, including claims, drawings, if any, and the declaration).[2] Specifically, although it is noted that the petition states that on 8 September, 2004, inventor Radu "received a copy of the subject patent application and was informed that a declaration would need to be signed by all inventors" it is unclear whether the statement was made by an individual with first-hand knowledge.

Petitioners may show proof that a copy of the application was sent or given to the non-signing inventor for review by providing a copy of the cover letter transmitting the application papers (specification, including claims, drawings, if any, and the declaration) to the non-signing inventor or details given in an affidavit or declaration of facts by a person having first-hand knowledge of the details.

Likewise, before a *bona fide* refusal to sign the declaration can be alleged, petitioners must show that a copy of the application was sent or given to the inventor. If the inventor refuses in writing, petitioners must submit a copy of that written refusal with any renewed petition. If the refusal was made orally to a person, then that person must provide details of the refusal in an affidavit or declaration of facts.

If the envelope sent to the non-signing inventor at the last known address is returned as undeliverable by the post office, petitioners should provide a copy of the envelope showing that the application was returned as undeliverable with any renewed petition. If the inventor refuses in writing to sign, a copy of that written refusal should be provided with any renewed petition. If the inventor refuses orally, petitioners should submit details of the refusal in an affidavit or declaration of facts by a person having first-hand knowledge of the refusal.

If repeated attempts to contact the non-signing inventor are unsuccessful, petitioners will have shown that despite diligent efforts, the inventor could not be reached.

The petition fee of $200.00 and surcharge of $130.00 will be charged to counsel's deposit account, No. 50-0476, as authorized on the fee transmittal sheet filed with the present petitions.

Petition Under 37 CFR 1.137(b).

---

[2] MPEP 409.03(d).

Since the petition under 37 CFR 1.47(a) is not grantable, petitioners have not submitted the reply required by the Notice to File Missing Parts mailed on 20 October, 2004. Therefore, action on the petition under 37 CFR 1.137(b) will be held in abeyance until after the requirements for a grantable petition under 37 CFR 1.47(a) have been met.

Further correspondence with respect to this matter should be addressed as follows:

By mail: Mail Stop Petition
Commissioner for Patents
P.O. Box 1450
Alexandria, VA 22313-1450

By FAX: (571) 273-8300
Attn: Office of Petitions

By hand: Customer Service Window
Mail Stop Petition
Randolph Building
401 Dulany Street
Alexandria, VA 22314

Telephone inquiries related to this decision should be directed to the undersigned at 571-272-3231.

D Wood

Douglas I. Wood
Senior Petitions Attorney
Office of Petitions

UNITED STATES PATENT AND TRADEMARK OFFICE

COMMISSIONER FOR PATENTS
UNITED STATES PATENT AND TRADEMARK OFFICE
P.O. BOX 1450
ALEXANDRIA, VA 22313-1450
www.uspto.gov
DIW Feb-06

KEVIN G. MIERZWA
ARTZ & ARTZ, P.C.
28333 TELEGRAPH ROAD, SUITE 250
SOUTHFIELD MI 48034

COPY MAILED

FEB 10 2006

OFFICE OF PETITIONS

In re Application of	:	
Radu and Dry	:	DECISION ON PETITION AND
Application No. 10/711,587	:	DECISION ACCORDING STATUS
Filed: 27 September, 2004	:	UNDER 37 CFR 1.47(a)
Atty Docket No.	:	
05116 (LC 0171 PUS)	:	

This is a decision in response to the "Request for Reconsideration of Petition Under 37 CFR 1.47(a)" filed on 25 January, 2006, which is treated as a renewed petition under 37 CFR 1.137(b)[1] and 37 CFR 1.47(a).

The petitions are **GRANTED**.

The application became abandoned on 21 December, 2004, for failure to timely file a reply to the Notice to File Missing Parts of Nonprovisional Application mailed on 20 October, 2004, which required an executed oath or declaration and a surcharge for its late filing. The Notice set a two (2) month shortened

---

[1] Effective December 1, 1997, the provisions of 37 CFR 1.137(b) now provide that where the delay in reply was unintentional, a petition may be filed to revive an abandoned application or a lapsed patent pursuant to 37 CFR 1.137(b). A grantable petition filed under the provisions of 37 CFR 1.137(b) must be accompanied by:

(1) the required reply, unless previously filed. In a nonprovisional application abandoned for failure to prosecute, the required reply may be met by the filing of a continuing application. In a nonprovisional application filed on or after June 8, 1995, and abandoned for failure to prosecute, the required reply may also be met by the filing of a request for continued examination in compliance with § 1.114. In an application or patent, abandoned or lapsed for failure to pay the issue fee or any portion thereof, the required reply must be the payment of the issue fee or any outstanding balance thereof. In an application abandoned for failure to pay the publication fee, the required reply must include payment of the publication fee.

(2) the petition fee as set forth in 37 CFR 1.17(m);

(3) a statement that the entire delay in filing the required reply from the due date for the reply until the filing of a grantable petition pursuant to 37 CFR 1.137(b) was unintentional. The Commissioner may required additional information where there is a question whether the delay was unintentional; and

(4) any terminal disclaimer (and fee as set forth in 37 CFR 1.20(d)) required pursuant to 37 CFR 1.137(c)).

period for reply. No extensions of time in accordance with 37 CFR 1.136(a) were obtained. Notice of Abandonment was mailed on 6 July, 2005. The petition filed on 6 September, 2005, was dismissed on 9 January, 2006.

Petition Under 37 CFR 1.137(b)

As the petition under 37 CFR 1.47(a) is grantable, the reply required by 37 CFR 1.137(b)(1) has now been provided, and the petition to revive is granted.

Petition Under 37 CFR 1.47(a)

Petitioners have shown via the statement of registered patent attorney Jeffrey J. Chapp, that the non-signing inventor was sent a copy of the application papers via E-mail, has failed to sign the declaration naming him as a joint inventor along with Alan G.W. Dry.

The above-identified application and papers have been reviewed and found in compliance with 37 CFR 1.47(a). This application is hereby accorded Rule 1.47(a) status.

As provided in Rule 1.47(c), this Office will forward notice of this application's filing to the non-signing inventor at the address given in the declaration. Notice of the filing of this application will also be published in the *Official Gazette*.

The application is being referred to Technology Center 3636 for examination in due course.

Telephone inquiries related to this decision should be directed to the undersigned at 571-272-3231.

D Wood

Douglas I. Wood
Senior Petitions Attorney
Office of Petitions

UNITED STATES PATENT AND TRADEMARK OFFICE

COMMISSIONER FOR PATENTS
UNITED STATES PATENT AND TRADEMARK OFFICE
P.O. BOX 1450
ALEXANDRIA, VA 22313-1450
www.uspto.gov
DIW Feb-06

Bogdan Radu
16011 Knollwood Drive
Dearborn MI 48120

COPY MAILED

FEB 10 2006

OFFICE OF PETITIONS

In re Application of
Radu et al.
Application No. 10/711,587
Filed: 27 September, 2004
For: ADJUSTABLE VEHICLE ARMREST

Dear Mr. Radu:

You are named as a joint inventor in the above identified United States patent application, filed under the provisions of 35 U.S.C. 116 (United States Code), and 37 CFR 1.47(a), Rules of Practice in Patent Cases. Should a patent be granted on the application you will be designated therein as a joint inventor.

As a named inventor you are entitled to inspect any paper in the file wrapper of the application, order copies of all or any part thereof (at a prepaid cost per 37 CFR 1.19) or make your position of record in the application. Alternatively, you may arrange to do any of the preceding through a registered patent attorney or agent presenting written authorization from you. If you care to join the application, counsel of record (see below) would presumably assist you. Joining in the application would entail the filing of an appropriate oath or declaration by you pursuant to 37 CFR 1.63.

Telephone inquiries regarding this communication should be directed to the undersigned at 571/272-3231. Requests for information regarding your application should be directed to the File Information Unit at 571-272-3150. Information regarding how to pay for and order a copy of the application, or a specific paper in the application, should be directed to Certification Division at 571-272-3150 or 1-800-972-6382 (outside the Washington D.C. area).

D Wood

Douglas I. Wood
Senior Petitions Attorney
Office of Petitions

KEVIN G. MIERZWA
ARTZ & ARTZ, P.C.
28333 TELEGRAPH ROAD, SUITE 250
SOUTHFIELD MI 48034

UNITED STATES PATENT AND TRADEMARK OFFICE

Commissioner for Patents
United States Patent and Trademark Office
P.O. Box 1450
Alexandria, VA 22313-1450
www.uspto.gov

Schlumberger Reservoir Completions
14910 Airline Road
P.O. Box 1590
Rosharon, TX 77583-1590

COPY MAILED

APR 12 2005

OFFICE OF PETITIONS

In re Application of :
Watson et al. :
Application No. 10/711,631 : DECISION REFUSING STATUS
Filed: September 29, 2004 : UNDER 37 CFR 1.47(a)
Attorney Docket No. 68.0417 :

This is in response to the petition under 37 CFR 1.47(a), filed January 21, 2005.

The petition is **dismissed**.

Applicants are given TWO (2) MONTHS from the mailing date of this decision to reply, correcting the below-noted deficiencies. Any reply should be entitled "Request for Reconsideration of Petition Under 37 CFR 1.47(a)," and should address the deficiencies noted below, except that the reply may include an oath or declaration executed by the non-signing inventor. Failure to respond will result in abandonment of the application. Any extensions of time will be governed by 37 CFR 1.136(a).

On September 29, 2004, applicants filed the above-identified application without an executed oath or declaration. On November 23, 2004, the Office of Initial Patent Examination mailed a "Notice to File Missing Parts of Application," requiring an executed oath or declaration and a $130.00 surcharge for its late filing. Additionally, the Notice required applicants to submit replacement drawings in compliance with 37 CFR 1.84 and 1.121.

On January 21, 2005, applicants filed, inter alia, the present petition, a $130.00 surcharge, a declaration missing the signature of joint inventor Parveen Sayela, and an authorization to charge their deposit account for any necessary fees.

In the present petition, applicants state that after diligent effort, applicants have been unable to reach Ms. Sayela. Specifically, Joanne Hyland, a patent administrator, stated that she emailed the declaration and assignment to Ms. Sayela on October 27, 2004; however, she received no response. On November 3, 2004, Ms. Hyland again emailed Ms. Sayela and requested a response to the first email and Ms. Sayela's current contact information. On December 17, 2004, Ms. Hyland sent Ms. Sayela a certified letter to her last known address. The letter was returned to Ms. Hyland on January 14, 2005.

A grantable petition under 37 CFR 1.47(a) requires: (1) proof that the non-signing inventor cannot be reached or refuses to sign the oath or declaration after having been presented with the application papers (specification, claims and drawings); (2) an acceptable oath or declaration in compliance with 35 U.S.C. §§ 115 and 116; (3) the petition fee; and (4) a statement of the last known address of the non-signing inventor. Applicants lacks item (1) as set forth above.

As to item (1), it is unclear whether applicants are arguing that they are unable to locate the non-signing inventor or that the inventor has refused to sign the declaration.

Initially, the Office notes that applicants have failed to submit sufficient evidence to prove that diligent efforts have been made to locate the non-signing inventor. See MPEP 403.03(d). If attempts to obtain a forwarding address and to locate the nonsigning inventor by other means such as through telephone or the Internet fail, then applicants will have provided the necessary proof required under 37 CFR 1.47 that the inventor cannot be reached. Details of the efforts to locate the nonsigning inventor should be set forth in an affidavit or declaration of facts by a person with firsthand knowledge of the details. Applicants should submit documentary evidence such the results of an Internet search.

However, if applicants are asserting that the inventor refuses to sign the declaration, applicants have failed to support this assertion. It appears that Ms. Hyland emailed only the declaration and assignment to Ms. Sayela. Unless inventor Sayela was presented with a complete copy of the application papers, including the specification, claims and drawings, she could not attest that she has "reviewed and understands the application papers." Accordingly, applicants failed to show or provide proof that the nonsigning inventor has refused to sign the declaration. See MPEP 409.03(d). To show that the inventor has refused to join in the application, applicants must show that a complete copy of the application papers, including the specification, claims and drawings, was presented to

inventor Sayela and that she did not respond to the request that she sign the declaration.

On December 8, 2004, the fee for a petition under 37 CFR 1.47(a) increased to $200.00. Applicants' Deposit Account will be charged accordingly.

Further correspondence with respect to this matter should be addressed as follows and **to the attention of Christina Tartera Donnell, Senior Petitions Attorney:**

By mail: Mail Stop Petition
Commissioner for Patents
P.O. Box 1450
Alexandria, VA 22313-1450

By FAX: (703) 872-9306
Attn: Office of Petitions

By hand: Customer Service Window
Randolph Building
401 Dulany Street
Alexandria, VA 22314

Telephone inquiries related to this decision may be directed to the undersigned at (571) 272-3211.

Christina Tartera Donnell

Christina Tartera Donnell
Senior Petitions Attorney
Office of Petitions

UNITED STATES PATENT AND TRADEMARK OFFICE

Commissioner for Patents
United States Patent and Trademark Office
P.O. Box 1450
Alexandria, VA 22313-1450
www.uspto.gov

Schlumberg Reservoir Completions
14910 Airline Road
P.O. Box 1590
Rosharon TX 77583-1590

COPY MAILED

MAY 23 2005

OFFICE OF PETITIONS

In re Application of :
Watson et al. :
Application No. 10/711,631 :
Filed: September 29, 2004 :
Attorney Docket No. 68.0417 :

DECISION NOTING JOINDER OF INVENTOR AND PETITION UNDER 37 CFR 1.47(a) MOOT

This is in response to the renewed petition under 37 CFR 1.47(a), filed on May 5, 2005.

In view of the joinder of the inventors, further consideration under 37 CFR 1.47(a) is not necessary. Accordingly, the petition is dismissed as involving a moot issue. This application does not have any Rule 1.47(a) status and no such status should appear on the file wrapper. This application does not need to be returned to the Office of Petitions for further consideration under 37 CFR 1.47(a).

This matter is being referred to Technology Center Art Unit 1764.

Telephone inquiries should be directed to the undersigned at (571) 272-3211.

Christina Tartera Donnell

Christina Tartera Donnell
Senior Petitions Attorney
Office of Petitions

UNITED STATES PATENT AND TRADEMARK OFFICE

COMMISSIONER FOR PATENTS
UNITED STATES PATENT AND TRADEMARK OFFICE
P.O. BOX 1450
ALEXANDRIA, VA 22313-1450
www.uspto.gov

JJGJr: 02-05

Paper No: __

WOOD, HERRON
& EVANS, LLP (LEAR)
2700 CAREW TOWER
441 VINE STREET
CINCINNATI OH 45202

COPY MAILED

FEB 11 2005

OFFICE OF PETITIONS

In re Application of :
Radu, et al. :
Application No. 10/711,636 : DECISION ON PETITION
Filed: 29 September, 2004 :
Attorney Docket No.: MASL-52 :

This is a decision on the petition filed on 27 December, 2004 under 37 C.F.R. §1.47(a).

The petition is **DISMISSED**.

NOTES:

(1) Any request for reconsideration of this decision must be submitted within TWO (2) MONTHS from the mail date of this decision. Extensions of time under 37 C.F.R. §1.136(a) are permitted. The reconsideration request should include a cover letter entitled "Renewed Petition under 37 C.F.R. §1.47(a)."

(2) There will be no further reconsideration thereafter.

BACKGROUND AND ANALYSIS

The record reflects that:

- the instant application was received and given a filing date of 29 September, 2004,

without, *inter alia*, a fully executed oath/declaration;

- the Office mailed a Notice of Missing Parts on 25 October, 2004;

- Petitioner Kevin G. Rooney (Reg. No. 36,330) has filed, *inter alia*, a statement by Steven Benintendi (Reg. No. 56,297) and a copy of an oath/declaration signed by name co-inventor Dry, but without the signature of non-signing inventor Bogdan Radu. (Mr. Radu), has stated a "last known address" for him, and has made a statement that he has tried to reach Mr. Radu (through counsel), the transmittal letters placed in evidence by Petitioner and alleged to have been sent to Mr. Radu clearly indicate that only an oath/declaration, and not a copy of the entire application (description, claims, drawings) were mailed to the non-signing inventor Mr. Radu in an effort to contact him and have him execute the oath/declaration.

ANALYSIS

The commentary at MPEP §409.03(d) states:

> * * *
>
> Where a refusal of the inventor to sign the application papers is alleged, the circumstances of the presentation of the application papers and of the refusal must be specified in a statement of facts by the person who presented the inventor with the application papers and/or to whom the refusal was made. Statements by a party not present when an oral refusal is made will not be accepted.
>
> Proof that a bona fide attempt was made to present a copy of the application papers (specification, including claims, drawings, and oath or declaration) to the nonsigning inventor for signature, but the inventor refused to accept delivery of the papers or expressly stated that the application papers should not be sent, may be sufficient. When there is an express oral refusal, that fact along with the time and place of the refusal must be stated in the statement of facts. When there is an express written refusal, a copy of the document evidencing that refusal must be made part of the statement of facts. The document may be redacted to remove material not related to the inventor's reasons for refusal.

The commentary at MPEP §409.03(d) provides:

> **409.03(d) Proof of Unavailability or Refusal**
>
> INVENTOR CANNOT BE REACHED

Where inability to find or reach a nonsigning inventor "after diligent effort" is the reason for filing under 37 C.F.R. §1.47, a statement of facts should be submitted that fully describes the exact facts which are relied on to establish that a diligent effort was made.

The fact that a nonsigning inventor is on vacation or out of town and is therefore temporarily unavailable to sign the declaration is not an acceptable reason for filing under 37 C.F.R. §1.47.

Furthermore, the fact that an inventor is hospitalized and/or is not conscious is not an acceptable reason for filing under 37 C.F.R. §1.47. 37 C.F.R. §1.43 may be available under these circumstances. See MPEP §409.02. Such a petition under 37 C.F.R. §1.47 will be dismissed as inappropriate.

The statement of facts must be signed, where at all possible, by a person having firsthand knowledge of the facts recited therein. Statements based on hearsay will not normally be accepted. Copies of documentary evidence such as internet searches, certified mail return receipts, cover letters of instructions, telegrams, that support a finding that the nonsigning inventor could not be found or reached should be made part of the statement. The steps taken to locate the whereabouts of the nonsigning inventor should be included statement of facts. It is important that the statement contain facts as opposed to conclusions.

REFUSAL TO JOIN

A refusal by an inventor to sign an oath or declaration when the inventor has not been presented with the application papers does not itself suggest that the inventor is refusing to join the application unless it is clear that the inventor understands exactly what he or she is being asked to sign and refuses to accept the application papers. A copy of the application papers should be sent to the last known address of the nonsigning inventor, or, if the nonsigning inventor is represented by counsel, to the address of the nonsigning inventor's attorney. The fact that an application may contain proprietary information does not relieve the 37 C.F.R. §1.47 applicant of the responsibility to present the application papers to the inventor if the inventor is willing to receive the papers in order to sign the oath or declaration. It is noted that the inventor may obtain a complete copy of the application, unless the inventor has assigned his or her interest in the application, and the assignee has requested that the inventor not be permitted access. See MPEP § 106. It is reasonable to require that the inventor be presented with the application papers before a petition under 37 C.F.R. §1.47 is granted since such a procedure ensures that the inventor is apprised of the application to which the oath or declaration is directed. In re Gray, 115 USPQ 80 (Comm'r Pat. 1956).

> Where a refusal of the inventor to sign the application papers is alleged, the circumstances of the presentation of the application papers and of the refusal must be specified in a statement of facts by the person who presented the inventor with the application papers and/or to whom the refusal was made. Statements by a party not present when an oral refusal is made will not be accepted.
>
> Proof that a bona fide attempt was made to present a copy of the application papers (specification, including claims, drawings, and oath or declaration) to the nonsigning inventor for signature, but the inventor refused to accept delivery of the papers or expressly stated that the application papers should not be sent, may be sufficient.
>
> When there is an express oral refusal, that fact along with the time and place of the refusal must be stated in the statement of facts. When there is an express written refusal, a copy of the document evidencing that refusal must be made part of the statement of facts. The document may be redacted to remove material not related to the inventor's reasons for refusal.
>
> When it is concluded by the 37 C.F.R. §1.47 applicant that a nonsigning inventor's conduct constitutes a refusal, all facts upon which that conclusion is based should be stated in the statement of facts in support of the petition or directly in the petition. If there is documentary evidence to support facts alleged in the petition or in any statement of facts, such evidence should be submitted. Whenever a nonsigning inventor gives a reason for refusing to sign the application oath or declaration, that reason should be stated in the petition.

Thus, not only must a copy of the entire application must be sent to the last known address of the non-signing inventor (or the estate representative) with a request that he/she sign the declaration for the patent application–and evidence of that transmittal submitted (a reasonable effort must be made to ascertain a current or last known address)–but also the petition (with fee) must state over the signature and registration number of the Petitioner the last known address (and, if appropriate, evidence of the due diligence effort ascertaining same).

Alternatively, an oath or declaration for the patent application in compliance with 37 C.F.R. §§1.63 and 1.64 must be presented.

The declaration must set forth the inventor's residence, citizenship and post office address. An oath or declaration in compliance with 37 C.F.R. §§1.63 and 1.64 signed by the Rule 1.47 applicant is required.[1]

---

[1] See: MPEP 409.03(b).

CONCLUSION

Therefore, the instant petition hereby is **dismissed**.

Further correspondence with respect to this matter should be addressed as follows:

By mail: Commissioner for Patents[2]
P.O. Box 1450
Alexandria, VA 22313-1450

By FAX: (703) 872-9306 (IFW Formal Filings)
ATTN.: Office of Petitions

By hand: Mail Stop: Petition
Customer Service Window
Randolph Building
401 Dulany Street
Alexandria, VA 22314

Telephone inquiries regarding this decision should be directed to the undersigned at (571) 272-3214.

John J. Gillon, Jr.
Senior Attorney
Office of Petitions

[2] To determine the appropriate addresses for other subject-specific correspondence, refer to the USPTO Web site at www.uspto.gov.

UNITED STATES PATENT AND TRADEMARK OFFICE

COMMISSIONER FOR PATENTS
UNITED STATES PATENT AND TRADEMARK OFFICE
P.O. BOX 1450
ALEXANDRIA, VA 22313-1450
www.uspto.gov

RECEIVED
2005 FEB 16 PM 2:05
WOOD, HERRON & EVANS

RECEIVED
CENTRAL FAX CENTER
MAR 2 1 2005

JJGJr. 02-05

Paper No: __

WOOD, HERRON
& EVANS, LLP (LEAR)
2700 CAREW TOWER
441 VINE STREET
CINCINNATI OH 45202

COPY MAILED
FEB 1 1 2005
OFFICE OF PETITIONS

In re Application of
Radu, et al.
Application No. 10/711,636
Filed: 29 September, 2004
Attorney Docket No.: MASL-52

DECISION ON PETITION

This is a decision on the petition filed on 27 December, 2004 under 37 C.F.R. §1.47(a).

The petition is **DISMISSED**.

NOTES:

(1) Any request for reconsideration of this decision must be submitted within TWO (2) MONTHS from the mail date of this decision. Extensions of time under 37 C.F.R. §1.136(a) are permitted. The reconsideration request should include a cover letter entitled "Renewed Petition under 37 C.F.R. §1.47(a)."

(2) There will be no further reconsideration thereafter.

BACKGROUND AND ANALYSIS

The record reflects that:

- the instant application was received and given a filing date of 29 September, 2004,

without, *inter alia*, a fully executed oath/declaration;

- the Office mailed a Notice of Missing Parts on 25 October, 2004;
- Petitioner Kevin G. Rooney (Reg. No. 36,330) has filed, *inter alia*, a statement by Steven Benintendi (Reg. No. 56,297) and a copy of an oath/declaration signed by name co-inventor Dry, but without the signature of non-signing inventor Bogdan Radu. (Mr. Radu), has stated a "last known address" for him, and has made a statement that he has tried to reach Mr. Radu (through counsel), the transmittal letters placed in evidence by Petitioner and alleged to have been sent to Mr. Radu clearly indicate that only an oath/declaration, and not a copy of the entire application (description, claims, drawings) were mailed to the non-signing inventor Mr. Radu in an effort to contact him and have him execute the oath/declaration.

ANALYSIS

The commentary at MPEP §409.03(d) states:

* * *

> Where a refusal of the inventor to sign the application papers is alleged, the circumstances of the presentation of the application papers and of the refusal must be specified in a statement of facts by the person who presented the inventor with the application papers and/or to whom the refusal was made. Statements by a party not present when an oral refusal is made will not be accepted.
>
> Proof that a bona fide attempt was made to present a copy of the application papers (specification, including claims, drawings, and oath or declaration) to the nonsigning inventor for signature, but the inventor refused to accept delivery of the papers or expressly stated that the application papers should not be sent, may be sufficient. When there is an express oral refusal, that fact along with the time and place of the refusal must be stated in the statement of facts. When there is an express written refusal, a copy of the document evidencing that refusal must be made part of the statement of facts. The document may be redacted to remove material not related to the inventor's reasons for refusal.

The commentary at MPEP §409.03(d) provides:

> **409.03(d) Proof of Unavailability or Refusal**
>
> INVENTOR CANNOT BE REACHED

Where inability to find or reach a nonsigning inventor "after diligent effort" is the reason for filing under 37 C.F.R. §1.47, a statement of facts should be submitted that fully describes the exact facts which are relied on to establish that a diligent effort was made.

The fact that a nonsigning inventor is on vacation or out of town and is therefore temporarily unavailable to sign the declaration is not an acceptable reason for filing under 37 C.F.R. §1.47.

Furthermore, the fact that an inventor is hospitalized and/or is not conscious is not an acceptable reason for filing under 37 C.F.R. §1.47. 37 C.F.R. §1.43 may be available under these circumstances. See MPEP §409.02. Such a petition under 37 C.F.R. §1.47 will be dismissed as inappropriate.

The statement of facts must be signed, where at all possible, by a person having firsthand knowledge of the facts recited therein. Statements based on hearsay will not normally be accepted. Copies of documentary evidence such as internet searches, certified mail return receipts, cover letters of instructions, telegrams, that support a finding that the nonsigning inventor could not be found or reached should be made part of the statement. The steps taken to locate the whereabouts of the nonsigning inventor should be included statement of facts. It is important that the statement contain facts as opposed to conclusions.

REFUSAL TO JOIN

A refusal by an inventor to sign an oath or declaration when the inventor has not been presented with the application papers does not itself suggest that the inventor is refusing to join the application unless it is clear that the inventor understands exactly what he or she is being asked to sign and refuses to accept the application papers. A copy of the application papers should be sent to the last known address of the nonsigning inventor, or, if the nonsigning inventor is represented by counsel, to the address of the nonsigning inventor's attorney. The fact that an application may contain proprietary information does not relieve the 37 C.F.R. §1.47 applicant of the responsibility to present the application papers to the inventor if the inventor is willing to receive the papers in order to sign the oath or declaration. It is noted that the inventor may obtain a complete copy of the application, unless the inventor has assigned his or her interest in the application, and the assignee has requested that the inventor not be permitted access. See MPEP § 106. It is reasonable to require that the inventor be presented with the application papers before a petition under 37 C.F.R. §1.47 is granted since such a procedure ensures that the inventor is apprised of the application to which the oath or declaration is directed. In re Gray, 115 USPQ 80 (Comm'r Pat. 1956).

> Where a refusal of the inventor to sign the application papers is alleged, the circumstances of the presentation of the application papers and of the refusal must be specified in a statement of facts by the person who presented the inventor with the application papers and/or to whom the refusal was made. Statements by a party not present when an oral refusal is made will not be accepted.
>
> Proof that a bona fide attempt was made to present a copy of the application papers (specification, including claims, drawings, and oath or declaration) to the nonsigning inventor for signature, but the inventor refused to accept delivery of the papers or expressly stated that the application papers should not be sent, may be sufficient.
>
> When there is an express oral refusal, that fact along with the time and place of the refusal must be stated in the statement of facts. When there is an express written refusal, a copy of the document evidencing that refusal must be made part of the statement of facts. The document may be redacted to remove material not related to the inventor's reasons for refusal.
>
> When it is concluded by the 37 C.F.R. §1.47 applicant that a nonsigning inventor's conduct constitutes a refusal, all facts upon which that conclusion is based should be stated in the statement of facts in support of the petition or directly in the petition. If there is documentary evidence to support facts alleged in the petition or in any statement of facts, such evidence should be submitted. Whenever a nonsigning inventor gives a reason for refusing to sign the application oath or declaration, that reason should be stated in the petition.

Thus, not only must a copy of the entire application must be sent to the last known address of the non-signing inventor (or the estate representative) with a request that he/she sign the declaration for the patent application–and evidence of that transmittal submitted (a reasonable effort must be made to ascertain a current or last known address)–but also the petition (with fee) must state over the signature and registration number of the Petitioner the last known address (and, if appropriate, evidence of the due diligence effort ascertaining same).

Alternatively, an oath or declaration for the patent application in compliance with 37 C.F.R. §§1.63 and 1.64 must be presented.

The declaration must set forth the inventor's residence, citizenship and post office address. An oath or declaration in compliance with 37 C.F.R. §§1.63 and 1.64 signed by the Rule 1.47 applicant is required.[1]

[1] See: MPEP 409.03(b).

CONCLUSION

Therefore, the instant petition hereby is **dismissed**.

Further correspondence with respect to this matter should be addressed as follows:

By mail: Commissioner for Patents[2]
P.O. Box 1450
Alexandria, VA 22313-1450

By FAX: (703) 872-9306 (IFW Formal Filings)
ATTN.: Office of Petitions

By hand: Mail Stop: Petition
Customer Service Window
Randolph Building
401 Dulany Street
Alexandria, VA 22314

Telephone inquiries regarding this decision should be directed to the undersigned at (571) 272-3214.

John J. Gillon, Jr.
Senior Attorney
Office of Petitions

[2] To determine the appropriate addresses for other subject-specific correspondence, refer to the USPTO Web site at www.uspto.gov.

UNITED STATES PATENT AND TRADEMARK OFFICE

Commissioner for Patents
United States Patent and Trademark Office
P.O. Box 1450
Alexandria, VA 22313-1450
www.uspto.gov

JJGJr: 06-05

Paper No: __

WOOD, HERRON
& EVANS, LLP (LEAR)
2700 CAREW TOWER
441 VINE STREET
CINCINNATI OH 45202

COPY MAILED

JUL 0 1 2005

OFFICE OF PETITIONS

In re Application of	:	
Radu, et al.	:	
Application No. 10/711,636	:	DECISION ON PETITION
Filed: 29 September, 2004	:	
Attorney Docket No.: MASL-52	:	

This is a decision on the petition filed on 21 March, 2005, under 37 C.F.R. §1.47(a).

The petition is **GRANTED**.

BACKGROUND AND ANALYSIS

The record reflects that:

- the instant application was received and given a filing date of 29 September, 2004, without, *inter alia*, a fully executed oath/declaration, and the the Office mailed a Notice of Missing Parts on 25 October, 2004;

- initially, Petitioner Kevin G. Rooney (Reg. No. 36,330) filed on 22 December, 2004, a petition (with fee) under 37 C.F.R. 1.47 with, *inter alia*, a statement by Steven Benintendi (Reg. No. 56,297) and a copy of an oath/declaration signed by name co-inventor Dry, but without the signature of non-signing inventor Bogdan Radu. (Mr. Radu), stated a "last known address" for him, and made a statement that he has tried to reach Mr. Radu (through counsel), the transmittal letters placed in evidence by Petitioner and alleged to have been sent to Mr. Radu clearly indicate that only an oath/declaration, and not a copy

of the entire application (description, claims, drawings) were mailed to the non-signing inventor Mr. Radu in an effort to contact him and have him execute the oath/declaration, and that petition was dismissed on 11 February, 2005, for those deficiencies;

- a renewed petition was filed via FAX on 21 March, 2005, and now evidences that, along with the oath/declaration, the entire application–description, abstract, claims and drawings–were sent to Mr. Radu, as required, and that he has not replied.

This application and papers have been reviewed and found in compliance with 37 C.F.R. §1.47(a).

This application hereby is **ACCORDED status under 37 C.F.R. §1.47(a)**.

As provided under 37 C.F.R. §1.47(a), the Office will forward notice of this application's filing to the non-signing inventor at the address given in the petition.

Notice of the filing of this application also will be published in the Official Gazette.

This file is being released to OIPE for processing as necessary to reflect the instant decision before being released for examination in due course.

Telephone inquiries concerning this decision may be directed to the undersigned at (571) 272-3214.

John J. Gillon, Jr.
Senior Attorney
Office of Petitions

UNITED STATES PATENT AND TRADEMARK OFFICE

Commissioner for Patents
United States Patent and Trademark Office
P.O. Box 1450
Alexandria, VA 22313-1450
www.uspto.gov

JJGJr: 06-05

Paper No: __

COPY MAILED

JUL 0 1 2005

OFFICE OF PETITIONS

BOGDAN RADU
16011 KNOLLWOOD DRIVE
DEARBORN, MI 48120

In re Application of :
Radu, et al. :
Application No. 10/711,636 : COMMUNICATION
Filed: 29 September, 2004 :
Attorney Docket No.: MASL-52 :

Dear Bogdan Radu:

You are named as inventor in the above identified United States patent application, filed under the provisions of 35 U.S.C. §116 (United States Code), and 37 C.F.R. §1.47,[1] ¶a, Rules of Practice in Patent Cases. Should a patent be granted on the application you will be designated therein as inventor.

As a named inventor you are entitled to inspect any paper in the file wrapper of the application,

---

[1] The regulations at 37 C.F.R. §1.47 provide:

§ 1.47 Filing when an inventor refuses to sign or cannot be reached.

(a) If a joint inventor refuses to join in an application for patent or cannot be found or reached after diligent effort, the application may be made by the other inventor on behalf of himself or herself and the nonsigning inventor. The oath or declaration in such an application must be accompanied by a petition including proof of the pertinent facts, the fee set forth in §1.17(h), and the last known address of the nonsigning inventor. The nonsigning inventor may subsequently join in the application by filing an oath or declaration complying with §1.63.

(b) Whenever all of the inventors refuse to execute an application for patent, or cannot be found or reached after diligent effort, a person to whom an inventor has assigned or agreed in writing to assign the invention, or who otherwise shows sufficient proprietary interest in the matter justifying such action, may make application for patent on behalf of and as agent for all the inventors. The oath or declaration in such an application must be accompanied by a petition including proof of the pertinent facts, a showing that such action is necessary to preserve the rights of the parties or to prevent irreparable damage, the fee set forth in §1.17(h), and the last known address of all of the inventors. An inventor may subsequently join in the application by filing an oath or declaration complying with §1.63.

© The Office will send notice of the filing of the application to all inventors who have not joined in the application at the address(es) provided in the petition under this section, and publish notice of the filing of the application in the *Official Gazette*. The Office may dispense with this notice provision in a continuation or divisional application, if notice regarding the filing of the prior application was given to the nonsigning inventor(s).

[47 Fed. Reg. 41275, Sept. 17, 1982, effective Oct. 1, 1982; 48 Fed. Reg. 2709, Jan. 20, 1983, effective Feb. 27, 1983; revised, 62 Fed. Reg. 53131, Oct. 10, 1997, effective Dec. 1, 1997; revised, 65 Fed. Reg. 54604, Sept. 8, 2000, effective Nov. 7, 2000]

order copies of all or any part thereof (at a prepaid cost per 37 C.F.R. §1.19) or make your position of record in the application. Alternatively, you may arrange to do any of the preceding through a registered patent attorney or agent presenting written authorization from you. If you care to join the application, counsel of record (see below) would presumably assist you. Joining in the application would entail the filing of an appropriate oath or declaration by you pursuant to 37 C.F.R. §1.63.

Requests for information regarding your application should be directed to the File Information Unit at (703) 308-2733.

Information regarding how to pay for and order a copy of the application, or a specific paper in the application, should be directed to Certification Division at (703) 308-9726 or toll-free: (800) 972-6382 (outside the Washington D.C. area).

Telephone inquiries concerning this letter may be directed to the undersigned at (571) 272-3214.

John J. Gillon, Jr.
Senior Attorney
Office of Petitions

Counsel of Record:
WOOD, HERRON
& EVANS, LLP (LEAR)
2700 CAREW TOWER
441 VINE STREET
CINCINNATI OH 45202

UNITED STATES PATENT AND TRADEMARK OFFICE

Commissioner for Patents
United States Patent and Trademark Office
P.O. Box 1450
Alexandria, VA 22313-1450
www.uspto.gov

MAILED

MAR 22 2010

OFFICE OF PETITIONS

CHOATE HALL & STEWART / CITRIX SYSTEMS, INC.
TWO INTERNATIONAL PLACE
BOSTON, MA 02110

In re Application of :
Georgy Momchilov et al :
Application No. 10/711,647 : DECISION ON PETITION
Filed: September 29, 2004 :
Attorney Docket No. 2006579-1490 (CTX-101) :

This is a decision on the petition under 37 CFR 1.182, filed, January 7, 2010, to correct the spelling of the first named inventor from "Gueorgui Momtchilov" to – Georgy Momchilov --.

The petition is **GRANTED**.

Office records have been corrected to reflect the correct spelling of the above-named inventor. A corrected Filing Receipt, which sets forth the correct spelling of the above-named inventor, accompanies this decision on petition.

Any questions concerning this matter may be directed to Irvin Dingle at (571) 272-3210.

Irvin Dingle
Petition Examiner
Office of Petitions

ATTACHMENT: Corrected Filing Receipt

UNITED STATES PATENT AND TRADEMARK OFFICE

UNITED STATES DEPARTMENT OF COMMERCE
United States Patent and Trademark Office
Address: COMMISSIONER FOR PATENTS
P.O. Box 1450
Alexandria, Virginia 22313-1450
www.uspto.gov

APPLICATION NUMBER	FILING or 371(c) DATE	GRP ART UNIT	FIL FEE REC'D	ATTY.DOCKET.NO	TOT CLAIMS	IND CLAIMS
10/711,647	09/29/2004	2456	2982	2006579-1490 (CTX-101)	76	12

CONFIRMATION NO. 5646

69665
CHOATE, HALL & STEWART / CITRIX SYSTEMS, INC.
TWO INTERNATIONAL PLACE
BOSTON, MA 02110

CORRECTED FILING RECEIPT

Date Mailed: 03/22/2010

Receipt is acknowledged of this non-provisional patent application. The application will be taken up for examination in due course. Applicant will be notified as to the results of the examination. Any correspondence concerning the application must include the following identification information: the U.S. APPLICATION NUMBER, FILING DATE, NAME OF APPLICANT, and TITLE OF INVENTION. Fees transmitted by check or draft are subject to collection. Please verify the accuracy of the data presented on this receipt. **If an error is noted on this Filing Receipt, please submit a written request for a Filing Receipt Correction. Please provide a copy of this Filing Receipt with the changes noted thereon. If you received a "Notice to File Missing Parts" for this application, please submit any corrections to this Filing Receipt with your reply to the Notice. When the USPTO processes the reply to the Notice, the USPTO will generate another Filing Receipt incorporating the requested corrections**

Applicant(s)

Georgy Momchilov, Coconut Creek, FL;
Ryan BEST, Wellington, FL;

Assignment For Published Patent Application

Citrix System, Inc., Fort Lauderdale, FL

Power of Attorney: The patent practitioners associated with Customer Number 24280

Domestic Priority data as claimed by applicant

Foreign Applications

If Required, Foreign Filing License Granted: 11/05/2004

The country code and number of your priority application, to be used for filing abroad under the Paris Convention, is **US 10/711,647**

Projected Publication Date: Not Applicable

Non-Publication Request: No

Early Publication Request: No

Title

SYSTEM AND METHOD FOR EVENT DETECTION AND RE-DIRECTION OVER A NETWORK USING A PRESENTATION LEVEL PROTOCOL

Preliminary Class

709

PROTECTING YOUR INVENTION OUTSIDE THE UNITED STATES

Since the rights granted by a U.S. patent extend only throughout the territory of the United States and have no effect in a foreign country, an inventor who wishes patent protection in another country must apply for a patent in a specific country or in regional patent offices. Applicants may wish to consider the filing of an international application under the Patent Cooperation Treaty (PCT). An international (PCT) application generally has the same effect as a regular national patent application in each PCT-member country. The PCT process **simplifies** the filing of patent applications on the same invention in member countries, but **does not result** in a grant of "an international patent" and does not eliminate the need of applicants to file additional documents and fees in countries where patent protection is desired.

Almost every country has its own patent law, and a person desiring a patent in a particular country must make an application for patent in that country in accordance with its particular laws. Since the laws of many countries differ in various respects from the patent law of the United States, applicants are advised to seek guidance from specific foreign countries to ensure that patent rights are not lost prematurely.

Applicants also are advised that in the case of inventions made in the United States, the Director of the USPTO must issue a license before applicants can apply for a patent in a foreign country. The filing of a U.S. patent application serves as a request for a foreign filing license. The application's filing receipt contains further information and guidance as to the status of applicant's license for foreign filing.

Applicants may wish to consult the USPTO booklet, "General Information Concerning Patents" (specifically, the section entitled "Treaties and Foreign Patents") for more information on timeframes and deadlines for filing foreign patent applications. The guide is available either by contacting the USPTO Contact Center at 800-786-9199, or it can be viewed on the USPTO website at http://www.uspto.gov/web/offices/pac/doc/general/index.html.

For information on preventing theft of your intellectual property (patents, trademarks and copyrights), you may wish to consult the U.S. Government website, http://www.stopfakes.gov. Part of a Department of Commerce initiative, this website includes self-help "toolkits" giving innovators guidance on how to protect intellectual property in specific countries such as China, Korea and Mexico. For questions regarding patent enforcement issues, applicants may call the U.S. Government hotline at 1-866-999-HALT (1-866-999-4158).

LICENSE FOR FOREIGN FILING UNDER

Title 35, United States Code, Section 184

Title 37, Code of Federal Regulations, 5.11 & 5.15

GRANTED

The applicant has been granted a license under 35 U.S.C. 184, if the phrase "IF REQUIRED, FOREIGN FILING LICENSE GRANTED" followed by a date appears on this form. Such licenses are issued in all applications where

the conditions for issuance of a license have been met, regardless of whether or not a license may be required as set forth in 37 CFR 5.15. The scope and limitations of this license are set forth in 37 CFR 5.15(a) unless an earlier license has been issued under 37 CFR 5.15(b). The license is subject to revocation upon written notification. The date indicated is the effective date of the license, unless an earlier license of similar scope has been granted under 37 CFR 5.13 or 5.14.

This license is to be retained by the licensee and may be used at any time on or after the effective date thereof unless it is revoked. This license is automatically transferred to any related applications(s) filed under 37 CFR 1.53(d). This license is not retroactive.

The grant of a license does not in any way lessen the responsibility of a licensee for the security of the subject matter as imposed by any Government contract or the provisions of existing laws relating to espionage and the national security or the export of technical data. Licensees should apprise themselves of current regulations especially with respect to certain countries, of other agencies, particularly the Office of Defense Trade Controls, Department of State (with respect to Arms, Munitions and Implements of War (22 CFR 121-128)); the Bureau of Industry and Security, Department of Commerce (15 CFR parts 730-774); the Office of Foreign AssetsControl, Department of Treasury (31 CFR Parts 500+) and the Department of Energy.

NOT GRANTED

No license under 35 U.S.C. 184 has been granted at this time, if the phrase "IF REQUIRED, FOREIGN FILING LICENSE GRANTED" DOES NOT appear on this form. Applicant may still petition for a license under 37 CFR 5.12, if a license is desired before the expiration of 6 months from the filing date of the application. If 6 months has lapsed from the filing date of this application and the licensee has not received any indication of a secrecy order under 35 U.S.C. 181, the licensee may foreign file the application pursuant to 37 CFR 5.15(b).

UNITED STATES PATENT AND TRADEMARK OFFICE

Commissioner for Patents
United States Patent and Trademark Office
P.O. Box 1450
Alexandria, VA 22313-1450
www.uspto.gov

OCT 11 2005

LAW OFFICE OF MICHAEL R. NICHOLS
3001 S. HARDIN BLVD. STE. 110
PMB #155
MCKINNEY, TX 75070

In re application of : **DECISION ON PETITION**
Calvin Charles Shaw : **TO MAKE SPECIAL**
Application No. 10/711,650 : **(APPLICANT'S AGE)**
Filed: September 29, 2004 :
For: METHOD AND APPARATUS FOR FRAMING GREETING CARDS

This is a decision on the petition submitted on September 23, 2005 under 37 CFR 1.102 (c) to make the above-identified application special under the accelerated examination procedure set forth in MPEP 708.02, Section IV: Applicant's Age.

The petition is **GRANTED**.

An application may be accorded special status upon the filing of a petition providing evidence showing that the applicant is at least 65 years old. Such a showing may be provided by evidence such as a birth certificate or a statement from the applicant.

The evidence submitted with the petition is a declaration signed by Calvin Charles Shaw indicating that he is at least 65 years of age.

The examiner is directed (1) to make an interference search for possible interfering applications, (2) to promptly examine this application out of turn, and (3) if any interfering application is discovered, to examine such application simultaneously and state in the first official letter of such application that it is being taken out of turn because of a possible interference.

Petitioner is advised that this application will continue to be special, throughout its entire prosecution and pendency, including interference or appeal, if any, only if petitioner makes a prompt ***bona fide*** effort, in response to each Office action, to place the application in condition for allowance, even if it is necessary to conduct an interview with the examiner to accomplish this purpose.

SUMMARY: Petition to Make Special **GRANTED**.

Randolph A. Reese
Special Programs Examiner
Technology Center 3600
(571) 272-6619

RAR/dcg: 10/3/05

UNITED STATES PATENT AND TRADEMARK OFFICE

Commissioner for Patents
United States Patent and Trademark Office
P.O. Box 1450
Alexandria, VA 22313-1450
www.uspto.gov

WOOD, HERRON & EVANS, LLP (LEAR)
2700 CAREW TOWER
441 VINE STREET
CINCINNATI OH 45202

COPY MAILED

APR 0 8 2005

OFFICE OF PETITIONS

In re Application of :
Bogdan Radu et al. :
Application No. 10/711,652 : DECISION ACCORDING STATUS
Filed: September 29, 2004 : UNDER 37 CFR 1.47(a)
Attorney Docket No. MASL-53 :

This is in response to the petition filed January 11, 2005 under 37 CFR 1.47(a).

The petition under 37 CFR 1.47(a) is **GRANTED**.

The above-identified application was filed on September 29, 2004, naming Bogdan Radu and Alan G. Dry as joint inventors but only with a declaration signed by Mr. Dry. Accordingly, on November 12, 2004, a "Notice To File Missing Parts of Application" was mailed, requiring *inter alia* a properly executed oath or declaration.

In response, the instant petition under 37 CFR 1.47(a) and late filing surcharge were filed. The petition argues that Mr. Radu refuses to execute the oath or declaration and thus to cooperate with the filing of the instant application.

A grantable petition under 37 CFR 1.47(a) requires: (1) proof that the non-signing inventor cannot be reached or refuses to sign the oath or declaration after having been presented with the application papers (specification, claims and drawings); (2) an acceptable oath or declaration in compliance with 35 U.S.C. §§ 115 and 116; (3) the petition fee; and (4) a statement of the last known address of the non-signing inventor.

The petition bears proof that the application papers were sent to Mr. Radu's counsel and that to date he has not returned an executed copy of the oath or declaration. The above-identified application and papers have been reviewed and found in compliance with 37 CFR 1.47(a). In view thereof, this application is hereby accorded Rule 1.47(a) status.

Thus, as provided in Rule 1.47c, this Office will forward notice of this application's filing to the non-signing inventor at the address given in the petition. Notice of the filing of this application will also be published in the Official Gazette.

This matter is being referred to Technology Center 3612 and will be examined in due course.

Telephone inquiries concerning this matter may be directed to the undersigned Petitions Attorney at (571) 272-3212.

Patricia Faison-Ball

Patricia Faison-Ball
Senior Petitions Attorney
Office of Petitions

UNITED STATES PATENT AND TRADEMARK OFFICE

Commissioner for Patents
United States Patent and Trademark Office
P.O. Box 1450
Alexandria, VA 22313-1450
www.uspto.gov

BOGDAN RADU
16011 KNOLLWOOD DRIVE
DEARBORN, MI 48120

COPY MAILED

APR 0 8 2005

OFFICE OF PETITIONS

In re Application of
Bogdan Radu et al.
Application No. 10/711,652
Filed: September 29, 2004
For: AUTOMOTIVE ASHTRAY HAVING AN ELECTROLUMINESCENT LAMP AND METHOD OF MAKING THE SAME

Dear Mr. Radu:

You are named as a joint inventor in the above identified United States patent application, filed under the provisions of 35 U.S.C. 116 (United States Code), and 37 CFR 1.47(a), Rules of Practice in Patent Cases. Should a patent be granted on the application you will be designated therein as a joint inventor.

As a named inventor you are entitled to inspect any paper in the file wrapper of the application, order copies of all or any part thereof (at a prepaid cost per 37 CFR 1.19) or make your position of record in the application. Alternatively, you may arrange to do any of the preceding through a registered patent attorney or agent presenting written authorization from you. If you care to join the application, counsel of record (see below) would presumably assist you. Joining in the application would entail the filing of an appropriate oath or declaration by you pursuant to 37 CFR 1.63.

Telephone inquiries regarding this communication should be directed to the undersigned Petitions Attorney at (571) 272-3212. Requests for information regarding your application should be directed to the File Information Unit at 703/308-2733. Information regarding how to pay for and order a copy of the application, or a specific paper in the application, should be directed to Certification Division at 703/308-9726 or 1-800-972-6382 (outside the Washington D.C. area).

Patricia Faison-Ball
Senior Petitions Attorney
Office of Petitions

cc:
WOOD, HERRON & EVANS, LLP (LEAR)
2700 CAREW TOWER
441 VINE STREET
CINCINNATI OH 45202

KAREN SMITH KIENBAUM, ESQ
KAREN SMITH KIENBAUM & ASSOCIATES
400 MONROE, SUITE 470
DETROIT, MI 48226

UNITED STATES PATENT AND TRADEMARK OFFICE

Commissioner for Patents
United States Patent and Trademark Office
P.O. Box 1450
Alexandria, VA 22313-1450
www.uspto.gov

ALAIN PAINCHAUD
724 STE MARIE
QUEBEC, QC G1R 3G8
CANADA

COPY MAILED
DEC 0 7 2006
OFFICE OF PETITIONS

In re Application of :
Alain Painchaud :
Application No. 10/711,662 : DECISION ON PETITION
Filed: September 29, 2004 :
Inventor: Alain Painchaud :

This is a decision on the petition filed in the above-identified application.

The petition is dismissed.

The rules and statutory provisions governing the operations of the U.S. Patent and Trademark Office require payment of a fee on filing each petition to revive an abandoned application for patent based on unintentional delay or to accept an unintentionally delayed payment of a fee for issuing a patent. In this instance, the fee required by law is $1,500. If applicant can qualify as a "small entity" and does so prior to or together with the payment of the fee, the fee will be one-half of the amount indicated **($750)**. See 37 CFR 1.27.

The petition in the above-identified application was not accompanied by payment of the required fee. No consideration on the merits can be given that petition until the required fee is received.

Petitioner should also note that the proper reply to a final Office action is the filing of one of the following: (1) a Notice of Appeal (and appeal fee required by 37 CFR 41.20(b)(2)); (2) an amendment that *prima facie* places the application in condition for allowance; (3) a Request for Continued Examination (RCE) and submission (37 CFR 1.114); or (4) the filing of a continuing application under 37 CFR 1.53(b). *See* MPEP 711.03(c)(II)(A)(2)(b). In the meantime, the argument filed on June 25, 2006 will be referred to the Examiner to determine whether the argument presented would overcome the rejections set

out in the final Office action and place the application in *prima facie* condition for allowance. If the Examiner determines that the argument presented would not *prima facie* place this application in condition for allowance, then a proper reply, as noted above, would have to be submitted in order to effect revival of this application. From an initial reading of the argument presented, it does not appear that the reply of June 25, 2006 would *prima facie* place the application in condition for allowance.

Further correspondence with respect to this matter should be addressed as follows:

By mail: Mail Stop PETITION
Commissioner for Patents
Post Office Box 1450
Alexandria, VA 22313-1450

By hand: Customer Service Window
Mail Stop Petitions
Randolph Building
401 Dulany Street
Alexandria, VA 22314

By fax: (571) 273-8300
ATTN: Office of Petitions

Any questions concerning this matter may be directed to the undersigned at (571) 272-3218.

Frances Hicks
Petitions Examiner
Office of Petitions

UNITED STATES PATENT AND TRADEMARK OFFICE

Commissioner for Patents
United States Patent and Trademark Office
P.O. Box 1450
Alexandria, VA 22313-1450
www.uspto.gov

ALAIN PAINCHAUD
724 STE MARIE
QUEBEC G1R 3G8 CANADA

COPY MAILED

DEC 28 2006

OFFICE OF PETITIONS

In re Application of :
Alain Painchaud :
Application No. 10/711,662 : SUPPLEMENTAL DECISION
Filed: September 29, 2004 :
For: BRIDGE CONVERTING :
MOVEMENT INTO ELECTRICAL ENERGY

This is a supplemental decision on the petition under the unintentional provisions of 37 CFR 1.137(b), filed June 6, 2006, to revive the above-identified application.

A decision on the petition to revive filed on June 6, 2006 was mailed on December 7, 2006, stating that the required fee of $750 for the petition was not received and dismissed the petition to revive. The decision also indicated that the argument filed on June 25, 2006 to the final Office action August 11, 2005 would be referred to the Examiner to determine whether the argument presented would overcome the rejections set forth in the Office action of August 11, 2005 and place the application in *prima facie* condition for allowance.

The Examiner has indicated that the reply would not *prima facie* place the application in condition for allowance for the reasons stated on the attached copy of an Advisory Action. Since the reply submitted does not *prima facie* place the application in condition for allowance, the reply required must be a Notice of Appeal (and appeal fee), the filing of a request for continued examination under 37 CFR 1.114 (and filing fee of $395 and submission, which submission requirement may be met by way of an amendment or arguments in reply to the Office action of August 11, 2005), or the filing of a continuing application under 37 CFR 1.53(b).

Accordingly, before revival of this application can be effected, petitioner must submit a renewed petition under 37 CFR 1.137(b), the $750 required petition fee, and a proper reply (as set out above) to the final Office action of August 11, 2005. The

request for reconsideration must be filed within two months from the mailing date of this supplemental petition. Extensions of time pursuant to the provisions of 37 CFR 1.136(a) are available. Failure to timely reply within this two month period or obtain extensions of time thereafter may be construed as intentional delay.

Further correspondence with respect to this matter should be addressed as follows:

By Mail: Mail Stop PETITION
Commissioner for Patents
P. O. Box 1450
Alexandria, VA 22313-1450

By hand: U. S. Patent and Trademark Office
Customer Service Window, Mail Stop Petitions
Randolph Building
401 Dulany Street
Alexandria, VA 22314

The centralized facsimile number is **(571) 273-8300.**

Telephone inquiries concerning this decision should be directed to the undersigned at (571) 272-3218.

Frances Hicks
Petitions Examiner
Office of Petitions

ATTACHMENT: Copy of Advisory Action

Advisory Action Before the Filing of an Appeal Brief	Application No. 10/711,662	Applicant(s) PAINCHAUD, ALAIN	
	Examiner Raymond W. Addie	Art Unit 3671	

--The MAILING DATE of this communication appears on the cover sheet with the correspondence address --

THE REPLY FILED 6/6, 6/25/06 FAILS TO PLACE THIS APPLICATION IN CONDITION FOR ALLOWANCE.

1. ☒ The reply was filed after a final rejection, but prior to or on the same day as filing a Notice of Appeal. To avoid abandonment of this application, applicant must timely file one of the following replies: (1) an amendment, affidavit, or other evidence, which places the application in condition for allowance; (2) a Notice of Appeal (with appeal fee) in compliance with 37 CFR 41.31; or (3) a Request for Continued Examination (RCE) in compliance with 37 CFR 1.114. The reply must be filed within one of the following time periods:
   a) ☒ The period for reply expires 3 months from the mailing date of the final rejection.
   b) ☐ The period for reply expires on: (1) the mailing date of this Advisory Action, or (2) the date set forth in the final rejection, whichever is later. In no event, however, will the statutory period for reply expire later than SIX MONTHS from the mailing date of the final rejection.

   Examiner Note: If box 1 is checked, check either box (a) or (b). ONLY CHECK BOX (b) WHEN THE FIRST REPLY WAS FILED WITHIN TWO MONTHS OF THE FINAL REJECTION. See MPEP 706.07(f).

Extensions of time may be obtained under 37 CFR 1.136(a). The date on which the petition under 37 CFR 1.136(a) and the appropriate extension fee have been filed is the date for purposes of determining the period of extension and the corresponding amount of the fee. The appropriate extension fee under 37 CFR 1.17(a) is calculated from: (1) the expiration date of the shortened statutory period for reply originally set in the final Office action; or (2) as set forth in (b) above, if checked. Any reply received by the Office later than three months after the mailing date of the final rejection, even if timely filed, may reduce any earned patent term adjustment. See 37 CFR 1.704(b).

NOTICE OF APPEAL

2. ☐ The Notice of Appeal was filed on _____. A brief in compliance with 37 CFR 41.37 must be filed within two months of the date of filing the Notice of Appeal (37 CFR 41.37(a)), or any extension thereof (37 CFR 41.37(e)), to avoid dismissal of the appeal. Since a Notice of Appeal has been filed, any reply must be filed within the time period set forth in 37 CFR 41.37(a).

AMENDMENTS

3. ☐ The proposed amendment(s) filed after a final rejection, but prior to the date of filing a brief, will not be entered because
   (a) ☐ They raise new issues that would require further consideration and/or search (see NOTE below);
   (b) ☐ They raise the issue of new matter (see NOTE below);
   (c) ☐ They are not deemed to place the application in better form for appeal by materially reducing or simplifying the issues for appeal; and/or
   (d) ☐ They present additional claims without canceling a corresponding number of finally rejected claims.

   NOTE: _____. (See 37 CFR 1.116 and 41.33(a)).
4. ☐ The amendments are not in compliance with 37 CFR 1.121. See attached Notice of Non-Compliant Amendment (PTOL-324).
5. ☐ Applicant's reply has overcome the following rejection(s): _____.
6. ☐ Newly proposed or amended claim(s) _____ would be allowable if submitted in a separate, timely filed amendment canceling the non-allowable claim(s).
7. ☐ For purposes of appeal, the proposed amendment(s): a) ☐ will not be entered, or b) ☐ will be entered and an explanation of how the new or amended claims would be rejected is provided below or appended.
   The status of the claim(s) is (or will be) as follows:
   Claim(s) allowed: _____.
   Claim(s) objected to: _____.
   Claim(s) rejected: _____.
   Claim(s) withdrawn from consideration: _____.

AFFIDAVIT OR OTHER EVIDENCE

8. ☐ The affidavit or other evidence filed after a final action, but before or on the date of filing a Notice of Appeal will not be entered because applicant failed to provide a showing of good and sufficient reasons why the affidavit or other evidence is necessary and was not earlier presented. See 37 CFR 1.116(e).
9. ☐ The affidavit or other evidence filed after the date of filing a Notice of Appeal, but prior to the date of filing a brief, will not be entered because the affidavit or other evidence failed to overcome all rejections under appeal and/or appellant fails to provide a showing a good and sufficient reasons why it is necessary and was not earlier presented. See 37 CFR 41.33(d)(1).
10. ☐ The affidavit or other evidence is entered. An explanation of the status of the claims after entry is below or attached.

REQUEST FOR RECONSIDERATION/OTHER

11. ☒ The request for reconsideration has been considered but does NOT place the application in condition for allowance because: See Continuation Sheet.
12. ☐ Note the attached Information Disclosure Statement(s). (PTO/SB/08) Paper No(s). _____
13. ☐ Other: _____.

Raymond Addie

RAYMOND ADDIE
PRIMARY EXAMINER

Continuation of 11. does NOT place the application in condition for allowance because: The actual claim language is anticipated by the disclosure of Runner # 6,204,568. See Col. 4, Ins. 9-40. Further, it is noted the claims only require the crankshaft to produce rotations in discrete steps when a vehicle pass over the movable segment. But claim 1 does not require the crankshaft to be operably connected to any electric generating device. Claim 2 permits the crankshaft to produce rotations that are converted into electrical energy, by an undefined "Mean of a technology based on Faraday's law of induction. Which the prior art clearly discloses and specificly illustrates.

UNITED STATES PATENT AND TRADEMARK OFFICE

Commissioner for Patents
United States Patent and Trademark Office
P.O. Box 1450
Alexandria, VA 22313-1450
www.uspto.gov

ALAIN PAINCHAUD
724 STE MARIE
QUEBEC G1R 3G8 CANADA

COPY MAILED

AUG 16 2007

OFFICE OF PETITIONS

In re Application of :
Alain Painchaud :
Application No. 10/711,662 : DECISION ON PETITION
Filed: September 29, 2004 :
For: BRIDGE CONVERTING :
MOVEMENT INTO ELECTRICAL ENERGY

This is a decision on the renewed petition under the 37 CFR 1.137(b), filed February 23, 2007, to revive the above-identified application.

The petition is **DISMISSED**.

The application became abandoned for failure to timely reply within the meaning of 37 CFR 1.113 to the final Office action, mailed August 11, 2005, which set a shortened statutory period for reply of three (3) months. No extensions of time under the provisions of 37 CFR 1.136(a) were obtained. Accordingly, the application became abandoned on November 12, 2005. A first petition to revive was filed on June 6, 2006 and was dismissed in a decision mailed December 7, 2006, stating that the required $750 petition fee had not been received. A supplemental decision was mailed on December 28, 2006 stating that the reply to the final Office action of did not *prima facie* place the application in condition for allowance.

Any request for reconsideration of this decision must be submitted within TWO (2) MONTHS from the mail date of this decision. Extensions of time under 37 CFR 1.136(a) are permitted. The reconsideration request should include a cover letter entitled "Renewed Petition under 37 CFR 1.137(b)." This is **not** a final agency action within the meaning of 5 U.S.C. § 704.

A grantable petition under 37 CFR 1.137(b) must be accompanied by: (1) the required reply, unless previously filed; (2) the petition fee as set forth in 37 CFR 1.17(m); (3) a statement that

the entire delay in filing the required reply from the due date for the reply until the filing of a grantable petition pursuant to 37 CFR 1.137(b) was unintentional; and (4) any terminal disclaimer (and fee as set forth in 37 CFR 1.20(d)) required by 37 CFR 1.137(d). Where there is a question as to whether either the abandonment or the delay in filing a petition under 37 CFR 1.137 was unintentional, the Director may require additional information. *See* MPEP 711.03(c)(II)(C).

The instant petition now lacks item (1).

As noted in the supplemental decision mailed December 28, 2006, petitioner was informed that the Examiner has indicated that the reply received to the final Office action of August 11, 2005 would not *prima facie* place the application in condition for allowance for the reasons stated on the copy of the Advisory Action, which accompanied the supplemental decision. Therefore, since petitioner has not to date submitted a proper reply; *i.e.*, (1) a Notice of Appeal (and appeal fee-currently $250), (2) the filing of a request for continued examination under 37 CFR 1.114 (and filing fee of $395 and submission, which submission requirement may be met by way of an amendment or arguments in reply to the Office action of August 11, 2005), (3) or the filing of a continuing application under 37 CFR 1.53(b), the petition must again be dismissed.

Accordingly, before revival of this application can be effected, petitioner must submit a renewed petition under 37 CFR 1.137(b) and a **proper reply** (as set out above) to the final Office action of August 11, 2005. The request for reconsideration must be filed within two months from the mailing date of this decision on petition. Extensions of time pursuant to the provisions of 37 CFR 1.136(a) are available. Failure to timely reply within the time period set in this decision may be construed as intentional delay.

Further correspondence with respect to this matter should be addressed as follows:

By Mail: Mail Stop PETITION
Commissioner for Patents
P. O. Box 1450
Alexandria, VA 22313-1450

By hand: U. S. Patent and Trademark Office
Customer Service Window, Mail Stop Petitions

Randolph Building
401 Dulany Street
Alexandria, VA 22314

The centralized facsimile number is **(571) 273-8300.**

Correspondence regarding this decision may also be filed through the electronic filing system of the USPTO.

To expedite consideration, petitioner may wish to contact the undersigned regarding the filing of the renewed petition under 37 CFR 1.137(b).

Telephone inquiries concerning this decision should be directed to the undersigned at (571) 272-3218.

Frances Hicks
Petitions Examiner
Office of Petitions

UNITED STATES PATENT AND TRADEMARK OFFICE

Commissioner for Patents
United States Patent and Trademark Office
P.O. Box 1450
Alexandria, VA 22313-1450
www.uspto.gov

WOOD, HERRON & EVANS, LLP (LEAR)
2700 CAREW TOWER
441 VINE STREET
CINCINNATI OH 45202

COPY MAILED

DEC 0 6 2004

OFFICE OF PETITIONS

In re Application of :
Michael J. Hier et al. :
Application No. 10/711,692 : DECISION DISMISSING
Filed: September 30, 2004 : PETITION
Attorney Docket No. MASL-68 :

This is a decision on the petition filed November 4, 2004, in response to the Notice of Omitted Items mailed October 26, 2004, requesting that Figures 3A-3B be accepted as having been filed with the original application. The petition is being treated under 37 CFR 1.182.

On September 30, 2004 the application was filed.

On October 26, 2004, the Office of Initial Patent Examination (OIPE) mailed a Notice of Omitted Items in a Nonprovisional Application stating that the application had been accorded a filing date of September 30, 2004, but Figures 3A-3B described in the specification appeared to have been omitted from the application.

In response, on November 4, 2004, the present petition was filed. Petitioners argue that the application was filed electronically via the Office's Electronic Filing System (EFS) on September 30, 2004 and that Figures 3A-3B was submitted with the original application. In support, petitioners have included a copy of the Acknowledgment Receipt, with a time stamp date of September 30, 2004, acknowledging receipt of, *inter alia*, "drawings-pdf". Petitioners therefore assert that Figures 3A-3B were received by the Office on September 30, 2004.

The argument and evidence supplied with the petition have been carefully considered, but are not persuasive. Upon a review of the Office EFS database and the original XML documents however, it was noted that only three sheets of drawings were filed with the application papers filed September 30, 2004 and they did not include Figures 3A-3B.

The petition is **DISMISSED**.

The copy of Figures 3A-3B supplied with the present petition will not be used for processing or examination, but will be retained in the application file. Petitioner may file Figures 3A-3B as a preliminary amendment. If Figures 3A-3B are filed as a preliminary amendment, the amendment will be reviewed for new matter.

As the evidence presented is not sufficient to prove that Figures 3A-3B were filed with the application when filed, the evidence is insufficient to show that the error was committed by the USPTO and thus, the petition fee will not be refunded.

The application is being returned to the Office of Initial Patent Examination for further processing with a filing date of September 30, 2004, using only the application papers filed on that date and not the copy of Figures 3A-3B submitted with the petition.

Telephone inquiries concerning this matter may be directed to the undersigned Petitions Attorney at (571) 272-3212.

Patricia Faison-Ball

Patricia Faison-Ball
Senior Petitions Attorney
Office of Petitions

UNITED STATES PATENT AND TRADEMARK OFFICE

Commissioner for Patents
United States Patent and Trademark Office
P.O. Box 1450
Alexandria, VA 22313-1450
www.uspto.gov

WOOD, HERRON & EVANS, LLP (LEAR)
2700 CAREW TOWER
441 VINE STREET
CINCINNATI OH 45202

COPY MAILED

FEB 23 2005

OFFICE OF PETITIONS

In re Application of
Michael J. Hier et al.
Application No. 10/711,692
Filed: September 30, 2004
Attorney Docket No. MASL-68

: DECISION DISMISSING
: PETITION

This is a decision on the petition filed December 10, 2004, in response to the Notice of Omitted Items mailed October 26, 2004, requesting that the filing date be changed to coincide with the filing of the instant petition, the preliminary amendment and Figures 3A-3B. The petition is being treated under 37 CFR 1.182.

On September 30, 2004 the application was filed. On October 26, 2004, the Office of Initial Patent Examination (OIPE) mailed a Notice of Omitted Items in a Nonprovisional Application stating that the application had been accorded a filing date of September 30, 2004, but Figures 3A-3B described in the specification appeared to have been omitted from the application. In response, on November 4, 2004, a petition was filed by Attorney William R. Allen and on December the petition was dismissed because while petitioners asserted that Figures 3A-3B were received by the Office on September 30, 2004, the evidence presented was not sufficient to prove that Figures 3A-3B were filed with the application when filed. A decision dismissing the petition was mailed December 6, 2004. The application retained the filing date of September 30, 2004 but without Figures 3A-3B as a part of the original disclosure. A preliminary amendment was filed with the petition filed November 4, 2004 and will be reviewed by the examiner in due course for a determination as to whether it introduces new matter.

The instant petition is filed by Attorney Kevin G. Rooney seeking an even later filing date, the date of the instant petition and submission of a preliminary amendment and Figures 3A-3B.

The petition is **DISMISSED**.

For the purposes of according a filing date, the mailing of a "Notice of Omitted Items" permits the applicant to either: (1) promptly establish prior receipt in the PTO of the omitted item at issue (generally by way of a date-stamped postcard receipt (MPEP 503)), or (2) promptly submit the omitted item in a nonprovisional application and accept the date of such submission as the application filing date. An applicant asserting that the omitted item was in fact deposited in the PTO with the application papers must file a petition (and the appropriate petition fee) with evidence of such deposit. An applicant desiring to submit the omitted item in a nonprovisional application and accept the date of such submission as the application filing date must file any omitted item with an oath or declaration in compliance with 37 CFR 1.63 and 1.64 referring to such item and a petition under 37 CFR 1.182 (with the petition fee under 37 CFR 1.17(h)) requesting the later filing date within two months of the date of the "Notice of Omitted Items" (37 CFR 1.181(f)). Finally, the third option is in the absence of electing options 1) or 2) above, to constructively opt to accept the filing date which has been accorded with the papers filed upon application. With option 3), no petition under 37 CFR 1.182 is necessary for that purpose.

The petition filed November 4, 2004 was filed electing under option (1) and thus while the arguments of prior receipt failed, the decision mailed December 6, 2004 allowed the application to retain the original filing date but without the omitted drawings. Comes now petitioner trying to to elect under option (2) to accept the filing date of the submission, however petitioner has done so with a deficient oath or declaration. The oath or declaration submitted upon petition is unsigned and thus not in compliance with 37 CFR 1.63 and 1.64

Again, the application will retain a filing date of September 30, 2004. The copy of Figures 3A-3B supplied with the present petition will not be used for processing or examination. A preliminary amendment is acknowledged and will be reviewed by the examiner in due course.

As the application has already been processed with a filing date of September 30, 2004 and with a notation that Figures 3A-3B were not a part of the original disclosure, this matter will be referred to the Technology Center 3616 for examination in due course and for a review of the preliminary amendment filed November 4, 2004 and December 10, 2004.

Telephone inquiries concerning this matter may be directed to the undersigned Petitions Attorney at (571) 272-3212.

Patricia Faison-Ball

Patricia Faison-Ball
Senior Petitions Attorney
Office of Petitions

UNITED STATES PATENT AND TRADEMARK OFFICE

UNITED STATES DEPARTMENT OF COMMERCE
United States Patent and Trademark Office
Address: COMMISSIONER FOR PATENTS
P.O. Box 1450
Alexandria, Virginia 22313-1450
www.uspto.gov

Workman Nydegger
1000 Eagle Gate Tower
60 East South Temple
Salt Lake City, UT 84111

Mail Date: 04/21/2010

Applicant	: Arash Massoudi	: DECISION ON REQUEST FOR
Patent Number	: 7581205	: RECALCULATION of PATENT
Issue Date	: 08/25/2009	: TERM ADJUSTMENT IN VIEW
Appliction No	: 10/711,706	: OF WYETH AND NOTICE OF INTENT TO
Filed	: 09/30/2004	: ISSUE CERTIFICATE OF CORRECTION
		:

The Request for Recalculation is **GRANTED** to the extent indicated.

The patent term adjustment has been determined to be **643** days. The USPTO will *sua sponte* issue a certificate of correction reflecting the amount of PTA days determined by the recalculation.

Prior to the issuance of the certificate of correction, the USPTO will afford patentee an opportunity to be heard and request reconsideration. Accordingly, patentee has **one month or thirty (30) days**, whichever is longer, to file a request for reconsideration of this patent term adjustment calculation. See 35 U.S.C. 154(b)(3)(B)(ii) and 37 CFR 1.322(a)(4). No extensions of time will be granted under 37 CFR 1.136.

Patentee should use document code PET.OP if electronically filing a request for reconsideration of this patent term adjustment calculation. The patentee must also include the information required by 37 CFR 1.705(b)(2) and the fee required by 37 CFR 1.18(e). If patentee does not file a timely request for reconsideration of this patent term adjustment calculation including the information required by 37 CFR 1.705(b)(2) and the fee required by 37 CFR 1.18(e), the USPTO will issue a certificate of correction reflecting the PTA determination noted above.

Patentee should be aware that in order to preserve the right to review in the United States District Court for the District of Columbia of the USPTO patent term adjustment determination, patentee must ensure that he or she also take the steps required under 35 U.S.C. 154(b)(4)(A) in a timely manner. Nothing in the request for recalculation should be construed as providing an alternative time frame for commencing a civil action under 35 U.S.C. 154(b)(4)(A).

Any questions concerning this decision should be directed to the Office of Patent Legal Administration at 571-272-7702.

UNITED STATES PATENT AND TRADEMARK OFFICE

Commissioner for Patents
United States Patent and Trademark Office
P.O. Box 1450
Alexandria, VA 22313-1450
www.uspto.gov

BAY AREA PATENT GROUP, LLC
13630 58TH ST. NORTH
SUITE 101
CLEARWATER FL 33760

COPY MAILED

FEB 21 2008

OFFICE OF PETITIONS

In re Application of
Norman Picard
Application No. 10/711,722
Filed: September 30, 2004
Attorney Docket No.: **04-01020**

ON PETITION

This is a decision on the petition filed February 5, 2007 under 37 CFR 1.137(b), [1] to revive the above-identified application.

The petition is **GRANTED**.

This application became abandoned for failure to timely reply to the non-Final Office Action mailed March 16, 2006. A shortened statutory period of three months was set for replying to the non-Final Office Action. No extensions of time having been requested, this application became abandoned June 19, 2006. Accordingly, a Notice of Abandonment was mailed January 11, 2007.

This matter is being referred to Technology Center 3723 for appropriate action on the amendment filed February 5, 2007.

Telephone inquiries concerning this matter should be directed to the undersigned Petitions Attorney at (571) 272-3212.

Patricia Faison-Ball
Senior Petitions Attorney
Office of Petitions

---

[1] Effective December 1, 1997, the provisions of 37 CFR 1.137(b) now provide that where the delay in reply was unintentional, a petition may be filed to revive an abandoned application or a lapsed patent pursuant to 37 CFR 1.137(b). ~~g~~rantable petition filed under the provisions of 37 CFR 1.137(b)must be accompanied by:

(1) the required reply, unless previously filed. In a nonprovisional application abandoned for failure to prosecute, the required reply may be met by the filing of a continuing application. In a nonprovisional application filed on or after June 8, 1995, and abandoned for failure to prosecute, the required reply may also be met by the filing of a request for continued examination in compliance with § 1.114. In an application or patent, abandoned or lapsed for failure to pay the issue fee or any portion thereof, the required reply must be the payment of the issue fee or any outstanding balance thereof. In an application abandoned for failure to pay the publication fee, the required reply must include payment of the publication fee.

(2) the petition fee as set forth in 37 CFR 1.17(m);

(3) a statement that the entire delay in filing the required reply from the due date for the reply until the filing of a grantable petition pursuant to 37 CFR 1.137(b) was unintentional. The Commissioner may required additional information where there is a question whether the delay was unintentional; and

(4) any terminal disclaimer (and fee as set forth in 37 CFR 1.20(d)) required pursuant to 37 CFR 1.137(c)).

UNITED STATES PATENT AND TRADEMARK OFFICE

UNITED STATES DEPARTMENT OF COMMERCE
United States Patent and Trademark Office
Address: COMMISSIONER FOR PATENTS
P.O. Box 1450
Alexandria, Virginia 22313-1450
www.uspto.gov

CHOATE, HALL & STEWART / CITRIX SYSTEMS, INC.
TWO INTERNATIONAL PLACE
BOSTON, MA 02110

Mail Date: 05/20/2010

Applicant	: Lee George LABORCZFALVI	: DECISION ON REQUEST FOR
Patent Number	: 7680758	: RECALCULATION of PATENT
Issue Date	: 03/16/2010	: TERM ADJUSTMENT IN VIEW
Application No	: 10/711,737	: OF WYETH
Filed	: 09/30/2004	:
		:

The Patentee's Request for Recalculation is **DISMISSED.**

This Request is deemed ineligible for consideration for one or more of the following reasons:

(A). The patent for which PTA recalculation is requested is either a design or reissue application or is a reexamination proceeding;

(B). The patent for which PTA recalculation is requested resulted from a utility or plant application filed under 35 USC 111(a) before May 29, 2000 and no CPA filed in the application on/after May 29, 2000;

(C). The patent for which PTA recalculation is requested resulted from an international application in which the international filing date was before May 29, 2000 and no CPA filed in the application on/after May 29, 2000;

(D). The patent for which PTA recalculation is requested issued on/after March 2, 2010;

(E). The Request for Recalculation was filed more than 180 days after the grant date of the patent and the request was not filed within two months of a dismissal of a request for reconsideration of the of the patent term under 37 CFR 1.705(d);

(F). The Request for Recalculation is not solely limited to USPTO pre-Wyeth interpretation of 35 U.S.C. 154(b)(2)(A);

or

(G). A civil action was filed pursuant to 35 U.S.C. 154(b)(4)(A)concerning the same patent at issue in this request.

Patentee may file a reply to this decision dismissing the Request for Recalculation. Patentee must file such reply within one month or thirty days, whichever is longer, of the mail date of the decision dismissing the Request for Recalculation. No fee is required if patentee is asserting in the reply that the dismissal for ineligibility is improper.

Patentee should use document code PET.OP if electronically filing a reply to this dismissal. If the USPTO finds that the request was improperly deemed ineligible, the USPTO will mail applicant a recalculation determination.

Patentee should be aware that in order to preserve the right to review in the United States District Court for the District of Columbia of the USPTO patent term adjustment determination, patentee must ensure that he or she also take the steps required under 35 U.S.C. 154(b)(4)(A). Nothing in the request for recalculation should be construed as providing an alternative time frame for commencing a civil action under 35 U.S.C. 154 (b)(4)(A).

Any questions concerning this decision should be directed to the Office of Patent Legal Administration at 571-272-7702.

UNITED STATES PATENT AND TRADEMARK OFFICE

Commissioner for Patents
United States Patent and Trademark Office
P.O. Box 1450
Alexandria, VA 22313-1450
www.uspto.gov

NOVAK DRUCE & QUIGG, LLP
1300 EYE STREET NW
SUITE 1000 WEST TOWER
WASHINGTON, DC 20005

COPY MAILED

MAR 19 2007

OFFICE OF PETITIONS

In re Application of :

Claes-Goran Linden :

Application No. 10/711,769 : DECISION ON PETITION

Filed: October 4, 2004 :

Attorney Docket No. 7298.143 PCUS00

This is a decision on the petition under 37 CFR 1.137(b), filed November 9, 2006, to revive the above-identified application.

The petition is **GRANTED**.

The above-cited application became abandoned for failure to reply in a timely manner to the non-final Office action mailed August 7, 2006, which set a shortened statutory period for reply of three (3) months. No extension of time pursuant to 37 CFR 1.136(a) was obtained. Accordingly, the application became abandoned on November 8, 2006. A Notice of Abandonment was mailed on August 7, 2006

The amendment filed November 9, 2006, is noted and made of record.

The application is being forwarded to Technology Center 3700, GAU 3727 for further processing.

Telephone inquiries concerning this decision should be directed to the undersigned at (571) 272-3222.

Kenya A. McLaughlin
Petitions Attorney
Office of Petitions

UNITED STATES PATENT AND TRADEMARK OFFICE

Commissioner for Patents
United States Patent and Trademark Office
P.O. Box 1450
Alexandria, VA 22313-1450
www.uspto.gov

NOVAK DRUCE & QUIGG, LLP
1300 EYE STREET NW
SUITE 1000 WEST TOWER
WASHINGTON, DC 20005

COPY MAILED

JUN 21 2007

OFFICE OF PETITIONS

In re Application of

Claes-Goran Linden

Application No. 10/711,769

Filed: October 4, 2004

Attorney Docket No. 7298.143 PCUS00

DECISION ON PETITION

This is a decision on the petition under 37 CFR 1.137(b), filed November 9, 2006, to revive the above-identified application.

The decision mailed March 19, 2007, is **vacated.**

The petition is **GRANTED**.

The above-cited application became abandoned for failure to reply in a timely manner to the non-final Office action mailed December 29, 2005, which set a shortened statutory period for reply of three (3) months. No extension of time pursuant to 37 CFR 1.136(a) was obtained. Accordingly, the application became abandoned on March 30, 2006. A Notice of Abandonment was mailed on August 7, 2006

The amendment filed November 9, 2006, is noted and made of record.

The application is being forwarded to Technology Center 3700, GAU 3782 for further processing.

Telephone inquiries concerning this decision should be directed to the undersigned at (571) 272-3222.

Kenya A. McLaughlin
Petitions Attorney
Office of Petitions

UNITED STATES PATENT AND TRADEMARK OFFICE

Commissioner for Patents
United States Patent and Trademark Office
P.O. Box 1450
Alexandria, VA 22313-1450
www.uspto.gov

NOVAK DRUCE AND QUIGG LLP (Volvo)
1000 LOUISIANA STREET
FIFTY-THIRD FLOOR
HOUSTON TX 77002

COPY MAILED

MAR 3 1 2008

OFFICE OF PETITIONS

In re Application of
Henrikson
Application No. 10/711,786
Filed: October 5, 2004
Attorney Docket No. 7589.204.PCUS00

DECISION ON PETITION

This is a decision on the petition under the unintentional provisions of 37 CFR 1.137(b), filed October 3, 2007, to revive the above-identified application.

The petition is **GRANTED**.

This application became abandoned October 26, 2006 for failure to timely submit a proper reply to the non-final Office action mailed July 25, 2006. The non-final Office action set a three month shortened statutory period of time for reply. This decision precedes Notice of Abandonment.

The petition satisfies the requirements of 37 CFR 1.137(b) in that petitioner has supplied (1) the reply in the form of an amendment, (2) the required petition fee, and (3) a proper statement of unintentional delay.

Telephone inquiries concerning this decision should be directed to the undersigned at (571) 272-3205.

This application is being referred to Technology Center AU 1725 for appropriate action by the Examiner in the normal course of business on the reply received herewith.

Alesia M. Brown
Petitions Attorney
Office of Petitions

UNITED STATES PATENT AND TRADEMARK OFFICE

Commissioner for Patents
United States Patent and Trademark Office
P.O. Box 1450
Alexandria, VA 22313-1450
www.uspto.gov

SCHLUMBERGER RESERVOIR COMPLETIONS
14910 AIRLINE ROAD
ROSHARON, TX 77583

COPY MAILED

JUL 25 2008

OFFICE OF PETITIONS

In re Application of Brooks et al. :
Application No. 10/711,809 : Decision on Petition
Filing Date: October 6, 2004 :
Attorney Docket No. 22.1552 :

This is a decision on the petition under 37 CFR 1.181, filed March 31, 2008, requesting the Office withdraw the holding of abandonment. The petition is filed in the alternative under 37 CFR 1.137(a) and 37 CFR 1.137(b).

The petition under 37 CFR 1.181 is **granted**.

The petition under 37 CFR 1.137(a) is **dismissed as moot**.

The petition under 37 CFR 1.137(b) is **dismissed as moot**.

Facts:

The Office mailed a non-final Office action including a requirement for restriction/election on June 18, 2007.

A reply to the June 18, 2007 Office action was timely filed July 10, 2007.

The examiner determined the July 10, 2007 reply, although bona fide, was not fully responsive. As a result, the examiner mailed an Office action on September 12, 2007, requiring petitioner to file a proper response. The Office action set a shortened statutory period for reply of one (1) month or thirty (30) days (whichever is later).

The Office did not receive a reply to the September 12, 2007.

A Notice of Abandonment was issued April 2, 2008.

Discussion:

The instant petition asserts the September 12, 2007 Office action was never received.

After a full review of the record, the Office has determined petitioner has provided sufficient evidence to demonstrate non-receipt of the September 12, 2007. Therefore, the Notice of Abandonment is hereby vacated and the holding of abandonment withdrawn.

Since the petition has been granted under 37 CFR 1.181, petitioner's request to have the petition considered under 37 CFR 1.137(a) and 37 CFR 1.137(b) is dismissed as moot.

A fee of $510 for the petition under 37 CFR 1.137(a) was charged to petitioner's deposit account on April 1, 2008. No petition fee is required for a petition to withdraw holding of abandonment under 37 CFR 1.181. Therefore, the petition fee has been credited back to petitioner's deposit account.

Technology Center Art Unit 3641 will be informed of the instant decision and the examiner will consider the Supplemental Reply filed March 31, 2008, in due course.

Telephone inquiries regarding this communication should be directed to Petitions Attorney Steven Brantley at (571) 272-3203.

Charles Steven Brantley
Senior Petitions Attorney
Office of Petitions

10/711/830

SPE RESPONSE FOR CERTIFICATE OF CORRECTION

Paper No.: _____

DATE : 11/21/06

TO SPE OF : ART UNIT 2834

SUBJECT : Request for Certificate of Correction on Patent No.: 7061146

A response is requested with respect to the accompanying request for a certificate of correction.

Please complete this form and return with file, within 7 days to:
Palm location **7580, Certificates of Correction Branch – South Tower – 9A22**
If response is for an IFW, **return to employee (named below) via PUBSCofC Team in MADRAS.**
With respect to the change(s) requested, correcting Office and/or Applicant's errors, should the patent read as shown in the certificate of correction (COCIN)? No new matter should be introduced, nor should the scope or meaning of the claims be changed.

Valerie Jackson

Thank You For Your Assistance

Certificates of Correction Branch
Tel. No. 703-308-9390 ext. 114

The request for issuing the above-identified correction(s) is hereby:
Note your decision on the appropriate box.

- [x] **Approved** — All changes apply.
- [ ] **Approved in Part** — Specify below which changes **do not** apply.
- [ ] **Denied** — State the reasons for denial below.

DANG LE
PRIMARY EXAMINER

Comments:

None

DARREN SCHUBERG
SUPERVISORY PATENT EXAMINER
TECHNOLOGY CENTER 2800

SPE

2834
Art Unit

UNITED STATES PATENT AND TRADEMARK OFFICE

COMMISSIONER FOR PATENTS
UNITED STATES PATENT AND TRADEMARK OFFICE
P.O. BOX 1450
ALEXANDRIA, VA 22313-1450
www.uspto.gov

SMITH HOPEN, PA
180 PINE AVENUE NORTH
OLDSMAR, FL 34677

COPY MAILED

JAN 21 2009

In re Application of
Alessandra Mazzeo et al
Application No. 10/711,847
Filed: October 8, 2004
Attorney Docket No. 1673.01

ON PETITION

This is a decision on the petition filed December 11, 2008 under 37 CFR 1.137(b), to revive the above-identified application.

The petition is **GRANTED.**

The above-identified application became abandoned for failure to submit the formal drawings in a timely manner in reply to the Notice of Allowance mailed July 22, 2008, which set a statutory period for reply of three (3) months. Accordingly, the above-identified application became abandoned on October 23, 2008.

The petition satisfies the conditions for revival pursuant to the provisions of 37 CFR 1.137(b) in that (1) the reply in the form of formal drawings; (2) the petition fee; and (3) the required statement of unintentional delay have been received.

Telephone inquiries concerning this decision should be directed to the undersigned at (571) 272-3210.

This matter is being referred to the Office of Data Management for further processing.

Irvin Dingle
Petitions Examiner
Office of Petitions

UNITED STATES PATENT AND TRADEMARK OFFICE

Commissioner for Patents
United States Patent and Trademark Office
P.O. Box 1450
Alexandria, VA 22313-1450
www.uspto.gov

COPY MAILED

AUG 0 5 2009

OFFICE OF PETITIONS

HUNG-CHANG TSENG
BATON DIGITAL ELECTRONIC TECH. CO., LTD.
P.O. BOX 108-00403
TAIPEI 106 TW TAIWAN

In re Application of	:	
Hung-Chang TSENG	:	
Application No. 10/711,865	:	DECISION ON PETITION
Filed: October 11, 2004	:	
Attorney Docket No.	:	

This is a decision on the petition under the unintentional provisions of 37 CFR 1.137(b), filed December 16, 2008, to revive the above-identified application.

The petition is **DISMISSED**.

Any request for reconsideration of this decision must be submitted within TWO (2) MONTHS from the mail date of this decision. Extensions of time under 37 CFR 1.136(a) are permitted. The reconsideration request should include a cover letter entitled "Renewed Petition under 37 CFR 1.137(b)." This is **not** a final agency action within the meaning of 5 U.S.C. § 704.

The application became abandoned for failure to reply in a timely manner to the Notice to File Missing Parts of Nonprovisional Application (Notice), mailed November 18, 2004. The Notice set a period for reply of two (2) months from the mail date of the Notice. No extensions of time under the provisions of 37 CFR 1.136(a) were obtained. Accordingly, the application became abandoned on January 19, 2005.

A grantable petition under 37 CFR 1.137(b) must be accompanied by: (1) the required reply, unless previously filed; (2) the petition fee as set forth in 37 CFR 1.17(m); (3) a statement that the entire delay in filing the required reply from the due date

disclaimer (and fee as set forth in 37 CFR 1.20(d)) required by 37 CFR 1.137(d). Where there is a question as to whether either the abandonment or the delay in filing a petition under 37 CFR 1.137 was unintentional, the Director may require additional information. *See* MPEP 711.03(c)(II)(C) and (D). The instant petition lacks items (1)and(3).

In regard to item (1), the required reply of an Oath or Declaration signed by the inventor, has not been submitted. The signature included with the declaration filed October 11, 2004, pertains to the assignment papers only. Petitioner should note that a surcharge of $65 is needed for late filing of Oath or Declaration as set forth in 37 CFR 1.16(f).

In regard to item (3), the delay has not been shown to the satisfaction of the Director to be unintentional for the periods (1) and (2) delineated below.

There are three periods to be considered during the evaluation of a petition under 37 CFR 1.137(b):

(1) the delay in reply that originally resulted in the abandonment;

(2) the delay in filing an initial petition pursuant to 37 CFR 1.137(b) to revive the application; and

(3) the delay in filing a grantable petition pursuant to 37 CFR 1.137(b) to revive the application.

As to Period (1):

The patent statute at 35 U.S.C. § 41(a)(7) authorizes the Director to revive an "unintentionally abandoned application." The legislative history of Public Law 97-247 reveals that the purpose of 35 U.S.C. § 41(a)(7) is to permit the Office to have more discretion than in 35 U.S.C. §§ 133 or 151 to revive abandoned applications in appropriate circumstances, but places a limit on this discretion, stating that "[u]nder this section a petition accompanied by either a fee of $500 or a fee of $50 **would not be granted where the abandonment** or the failure to pay the fee for issuing the patent **was intentional** as opposed to being unintentional or unavoidable." [emphasis added]. See H.R. Rep. No. 542, 97th Cong., 2d Sess. 6-7 (1982), *reprinted in* 1982 U.S.C.C.A.N. 770-71. The revival of an intentionally abandoned application is antithetical to the meaning and intent of the statute and regulation.

35 U.S.C. § 41(a)(7) authorizes the Director to accept a petition "for the revival of an unintentionally abandoned application for a patent." As amended December 1, 1997, 37 CFR 1.137(b)(3) provides that a petition under 37 CFR 1.137(b) must be accompanied by a statement that the delay was unintentional, but provides that "[t]he Commissioner may require additional information where there is a question whether the delay was unintentional." Where, as here, there is a question whether the initial delay was unintentional, the petitioner must meet the burden of establishing that the delay was unintentional within the meaning of 35 U.S.C. § 41(a)(7) and 37 CFR 1.137(b). *See* In re Application of G, 11 USPQ2d 1378, 1380 (Comm'r Pats. 1989); 37 CFR 1.137(b). Here, in view of the inordinate delay (almost over 2 years) in resuming prosecution, there is a question whether the entire delay was unintentional. Petitioner should note that the issue is not whether some of the delay was unintentional by any party; rather, the issue is whether the entire delay has been shown to the satisfaction of the Director to be unintentional.

The question under 37 CFR 1.137(b) for period (1) is whether the delay on the part of the party having the right or authority to reply to avoid abandonment (or not reply) was unintentional. Accordingly, any renewed petition must clearly identify the party having the right to reply to avoid abandonment on January 19, 2005. That party, in turn must explain what effort(s) was made to further reply to the outstanding Office action and, further, why no reply was filed. If no effort was made to further reply, then that party must explain why the delay in this application does not result from a deliberate course of action (or inaction). Likewise, as David Russell was counsel of record at the time of abandonment, the attorney should explain why this application became abandoned while it was under his control and what efforts the attorney made to further reply of itself and with whom this matter was discussed.

Copies of any correspondence relating to the filing, or to not filing a further reply to the outstanding Office action are required from responsible person(s) involved with this application at the time of abandonment. Statements are required from the person(s) having firsthand knowledge of the circumstances surrounding the lack of a reply to the outstanding Office action. As the courts have made clear, it is pointless for the USPTO to revive a long abandoned application without an adequate showing that the delay did not result from a deliberate course of action. *See* Lawman Armor v. Simon, 2005 U.S. Dist. LEXIS 10843, 74 USPQ2d 1633 (DC EMich 2005); Field Hybrids, LLC v. Toyota Motor Corp., 2005 U.S. Dist. LEXIS 1159 (D. Minn Jan.

27, 2005); Lumenyte Int'l Corp. v. Cable Lite Corp., Nos. 96-1011, 96-1077, 1996 U.S. App. LEXIS 16400, 1996 WL 383927 (Fed. Cir. July 9, 1996) (unpublished) (patents held unenforceable due to a finding of inequitable conduct in submitting an inappropriate statement that the abandonment was unintentional).

As to Period (2):

Likewise, where the applicant deliberately chooses not to seek or persist in seeking the revival of an abandoned application, or where the applicant deliberately chooses to delay seeking the revival of an abandoned application, the resulting delay in seeking revival of the abandoned application cannot be considered as "unintentional" within the meaning of 37 CFR 1.137(b). *See* MPEP 711.03(c).

The language of both 35 U.S.C. § 41(a)(7) and 37 CFR 1.137(b) are clear and unambiguous, and, furthermore, without qualification. That is, the delay in filing the reply during prosecution, as well as in filing the petition seeking revival, must have been, without qualification, "unintentional" for the reply to now be accepted on petition. The Office requires that the entire delay be at least unintentional as a prerequisite to revival of an abandoned application to prevent abuse and injury to the public. *See* H.R. Rep. No. 542, 97th Cong., 2d Sess. 7 (1982), reprinted in 1982 U.S.C.C.A.N. 771 ("[i]n order to prevent abuse and injury to the public the Commissioner . . . could require applicants to act promptly after becoming aware of the abandonment"). The December 1997 change to 37 CFR 1.137 did not create any new right to overcome an intentional delay in seeking revival, or in renewing an attempt at seeking revival, of an abandoned application. *See* Changes to Patent Practice and Procedure; Final Rule Notice, 62 Fed. Reg. 53131, 53160 (October 10, 1997), 1203 Off. Gaz. Pat. Office 63, 87 (October 21, 1997), which clearly stated that any protracted delay (here, over 4 years) could trigger, as here, a request for additional information. As the courts have since made clear, a protracted delay in seeking revival, as here, requires a petitioner's detailed explanation seeking to excuse the delay as opposed to USPTO acceptance of a general allegation of unintentional delay. *See* Lawman Armor v. Simon, 2005 U.S. Dist. LEXIS 10843, 74 USPQ2d 1633, at 1637-8 (DC EMich 2005); Field Hybrids, LLC v. Toyota Motor Corp., 2005 U.S. Dist. LEXIS 1159 (D. Minn Jan. 27, 2005) at *21-*23. Statements are required from the responsible person(s) having firsthand knowledge of the circumstances surrounding the protracted delay, after the abandonment date, in seeking revival.

Any renewed petition may be addressed as follows:

By Mail: Mail Stop PETITION
Commissioner for Patents
P. O. Box 1450
Alexandria, VA 22313-1450

By hand: U. S. Patent and Trademark Office
Customer Service Window, Mail Stop Petitions
Randolph Building
401 Dulany Street
Alexandria, VA 22314

The centralized facsimile number is **(571) 273-8300.**

The change of address request submitted with the instant petition on December 16, 2008 has been processed and made of record, as the request has been signed by the sole inventor.

Correspondence regarding this decision may also be filed through the electronic filing system of the USPTO.

Telephone inquiries concerning this decision should be directed to Tredelle Jackson at (571) 272-2783.

Ramesh Krishnamurthy
Petitions Examiner
Office of Petitions

UNITED STATES PATENT AND TRADEMARK OFFICE

Commissioner for Patents
United States Patent and Trademark Office
P.O. Box 1450
Alexandria, VA 22313-1450
www.uspto.gov

HUNG-CHANG TSENG
BATON DIGITAL ELECTRONIC TECH. CO., LTD.
P.O. BOX 108-00403
TAIPEI 106 TW TAIWAN

MAILED
DEC 07 2009
OFFICE OF PETITIONS

In re Application of	:	
Hung-Chang TSENG	:	
Application No. 10/711,865	:	DECISION ON PETITION
Effective Date: October 11, 2004	:	
Attorney Docket No.	:	

This is a decision on the renewed petition under the unintentional provisions of 37 CFR 1.137(b), filed September 09, 2009, to revive the above-identified application.

The petition is **GRANTED**.

The application became abandoned for failure to reply in a timely manner to the Notice to File Missing Parts of Nonprovisional Application (Notice), mailed November 18, 2004. The Notice set a period for reply of two (2) months from the mail date of the Notice. No extensions of time under the provisions of 37 CFR 1.136(a) were obtained. Accordingly, the application became abandoned on January 19, 2005.

The petition satisfies the requirements of 37 CFR 1.137(b) in that petitioner has supplied (1) the reply in the form of a declaration and surcharge for late filing of the declaraton, (2) the petition fee of $810, and (3) a proper statement of unintentional delay. Accordingly, the reply to the Notice to File Missing Parts of Nonprovisional Application of November 18, 2004 is accepted as having been unintentionally delayed.

Telephone inquiries concerning this decision should be directed to Tredelle Jackson at 571-272-2783.

This application is being referred to the Office Patent Application Processing.

Ramesh Krishnamurthy
Petitions Examiner
Office of Petitions

UNITED STATES PATENT AND TRADEMARK OFFICE

COMMISSIONER FOR PATENTS
UNITED STATES PATENT AND TRADEMARK OFFICE
P.O. BOX 1450
ALEXANDRIA, VA 22313-1450
www.uspto.gov

JUL 28 2005

In re Application of	:	
Hollis B. Sherburne	:	
Serial No. 10/711,876	:	DECISION ON PETITION
Filed: October 11, 2004	:	TO MAKE SPECIAL
For: ADJUSTABLE WRENCH	:	

Applicant's petition, filed April 18, 2005, requests that this application be rendered special for examination in that applicant is over sixty-five (65) years of age.

The petition has been reviewed and is found to be in compliance with the requirements for special status as set forth in Section 708.02(IV) of the Manual of Patent Examining Procedure (MPEP).

PETITION GRANTED.

Frederick R. Schmidt, Director
Technology Center 3700

Roger A. Jackson
800 Pennsylvania, Suite 1504
Denver, CO 80203-3185

UNITED STATES PATENT AND TRADEMARK OFFICE

Commissioner for Patents
United States Patent and Trademark Office
P.O. Box 1450
Alexandria, VA 22313-1450
www.uspto.gov

ZIOLKOWSKI PATENT SOLUTIONS GROUP, SC (GEMS)
136 S WISCONSIN ST
PORT WASHINGTON, WI 53074

COPY MAILED
DEC 11 2008

In re Application of :
Anja C.S. Brau, et al. :
Application No. 10/711,892 : ON PETITION
Filed: October 12, 2004 :
Attorney Docket No. GEMS8081.231 :

This is a decision on the petition under 37 CFR 1.137(a), filed July 30, 2008, to revive the above-identified application.

The petition is **DISMISSED.**

Any further petition to revive must be submitted within TWO (2) MONTHS from the mail date of this decision. Extensions of time under 37 CFR 1.136(a) are permitted. The reconsideration request should include a cover letter entitled "Renewed Petition under 37 CFR 1.137(a)." This is **not** a final agency action within the meaning of 5 U.S.C.§ 704.

The application became abandoned for failure to timely reply within the meaning of 37 CFR 1.113 to the final Office action, mailed September 13, 2007. On July 30, 2008, the present petition was filed, wherein petitioner asserts that docketing error was the cause of delay in acting to prevent the application from becoming abandoned. A Notice of Abandonment was subsequently mailed on July 29, 2008.

A grantable petition under 37 CFR 1.137(a) must be accompanied by: (1) the required reply, unless previously filed; (2) the petition fee as set forth in 37 CFR 1.17(l); (3) a showing to the satisfaction of the Director that the entire delay in filing the required reply from the due date for the reply until the filing of a grantable petition pursuant to 37 CFR 1.137(a) was unavoidable; and (4) any terminal disclaimer (and fee as set forth in 37 CFR 1.20(d)) required pursuant to 37 CFR 1.137(d). The instant petition lacks item (3).

A delay resulting from an error (e.g., a docketing error) on the part of an employee in the performance of a clerical function may provide the basis for a showing of "unavoidable" delay, provided it is shown that: (1) the error was the cause of the delay at issue; (2) there was in place a business routine for performing the clerical function that could reasonably be relied upon to avoid errors in its

performance; (3) and the employee was sufficiently trained and experienced with regard to the function and routine for its performance that reliance upon such employee represented the exercise of due care. *See* MPEP 711.03(c)(II)(C)(2).

Petitioner has provided an explanation of the docketing and call-up system in use and the type of records kept and the person responsible for the maintenance of the system. However, petitioner does not provided information regarding the training provided to the personnel responsible for the docketing error, including the degree of supervision of their work, examples of other work functions carried out, and checks on the described work which were used to assure proper execution of assigned tasks.

If petitioner cannot provide the evidence necessary to establish unavoidable delay, or simply does not wish to, petitioner may wish to consider filing a petition stating that the delay was unintentional. Public Law 97-247, § 3, 96 Stat. 317 (1982), which revised patent and trademark fees, amended 35 U.S.C. § 41(a)(7) to provide for the revival of an "unintentionally" abandoned application without a showing that the delay in prosecution or in late payment of the issue fee was "unavoidable." This amendment to 35 U.S.C. § 41(a)(7) has been implemented in 37 CFR 1.137(b). An "unintentional" petition under 37 CFR 1.137(b) must be accompanied by the $1,620 petition fee.

The filing of a petition under 37 CFR 1.137(b) cannot be intentionally delayed and therefore must be filed promptly. A person seeking revival due to unintentional delay cannot make a statement that the delay was unintentional unless the entire delay, including the date it was discovered that the application was abandoned until the filing of the petition to revive under 37 CFR 1.137(b), was unintentional. A statement that the delay was unintentional is not appropriate if petitioner intentionally delayed the filing of a petition for revival under 37 CFR 1.137(b).

Further correspondence with respect to this matter should be delivered through one of the following mediums:

By mail:	Mail Stop PETITIONS Commissioner for Patents Post Office Box 1450 Alexandria, VA 22313-1450
By hand:	Customer Service Window Mail Stop Petitions Randolph Building 401 Dulany Street Alexandria, VA 22314
By fax:	(571) 273-8300 ATTN: Office of Petitions

By internet: EFS-Web[1]

Any questions concerning this matter may be directed to the undersigned at (571) 272-3204.

Sherry D. Brinkley
Petitions Examiner
Office of Petitions

[1] www.uspto.gov/ebc/efs_help.html (for help using EFS-Web call the Patent Electronic Business Center at (866) 217-9197)

UNITED STATES PATENT AND TRADEMARK OFFICE

Commissioner for Patents
United States Patent and Trademark Office
P.O. Box 1450
Alexandria, VA 22313-1450
www.uspto.gov

ZIOLKOWSKI PATENT SOLUTIONS GROUP, SC (GEMS)
136 S WISCONSIN ST
PORT WASHINGTON, WI 53074

COPY MAILED

APR 09 2009

OFFICE OF PETITIONS

In re Application of :
Anja C.S. Brau, et al. :
Application No. 10/711,892 :
Filed: October 12, 2004 :
Attorney Docket No. GEMS8081.231 :

ON PETITION

This is a decision on the renewed petition under 37 CFR 1.137(a), filed February 11, 2009, to revive the above-identified application.

The petition is **GRANTED.**

The application became abandoned for failure to timely reply within the meaning of 37 CFR 1.113 to the final Office action, mailed September 13, 2007. A Notice of Abandonment was mailed on July 29, 2008. On July 30, 2008, a petition under 37 CFR 1.137(a) was filed; however, the petition was dismissed in a decision mailed December 10, 2008. On February 11, 2009, the renewed petition was filed.

The petition, as supplemented, satisfies the requirements of 37 CFR 1.137(a) in that petitioner has supplied (1) the required reply in the form of a Request for Continued Examination (RCE), including the fee of $810 and the submission required by 37 CFR 1.114; (2) the petition fee of $510; and (3) a showing to the satisfaction of the Director that the entire delay was unavoidable.

This application is being referred to Technology Center AU 3737 for processing of the RCE filed July 18, 2008 and for appropriate action by the Examiner in the normal course of business on the amendment submitted in accordance with 37 CFR 1.114.

Telephone inquiries concerning this decision should be directed to the undersigned at (571) 272-3204. Inquiries regarding prosecution should be directed to the Technology Center.

Sherry D. Brinkley
Petitions Examiner
Office of Petitions

UNITED STATES PATENT AND TRADEMARK OFFICE

UNITED STATES DEPARTMENT OF COMMERCE
United States Patent and Trademark Office
Address: COMMISSIONER FOR PATENTS
P.O. Box 1450
Alexandria, Virginia 22313-1450
www.uspto.gov

JOHN A. SMART
201 LOS GATOS
SARATOGA RD, #161
LOS GATOS, CA 95030-5308

Mail Date: 04/21/2010

Applicant	: Sudipto R. Chowdhuri	: DECISION ON REQUEST FOR
Patent Number	: 7574424	: RECALCULATION of PATENT
Issue Date	: 08/11/2009	: TERM ADJUSTMENT IN VIEW
Appliction No	: 10/711,931	: OF WYETH
Filed	: 10/13/2004	:
		:

The Patentee's Request for Recalculation is **DISMISSED.**

This Request is deemed ineligible for consideration for one or more of the following reasons:

(A). The patent for which PTA recalculation is requested is either a design or reissue application or is a reexamination proceeding;

(B). The patent for which PTA recalculation is requested resulted from a utility or plant application filed under 35 USC 111(a) before May 29, 2000 and no CPA filed in the application on/after May 29, 2000;

(C). The patent for which PTA recalculation is requested resulted from an international application in which the international filing date was before May 29, 2000 and no CPA filed in the application on/after May 29, 2000;

(D). The patent for which PTA recalculation is requested issued on/after March 2, 2010;

(E). The Request for Recalculation was filed more than 180 days after the grant date of the patent and the request was not filed within two months of a dismissal of a request for reconsideration of the of the patent term under 37 CFR 1.705(d);

(F). The Request for Recalculation is not solely limited to USPTO pre-Wyeth interpretation of 35 U.S.C. 154(b)(2)(A);

or

(G). A civil action was filed pursuant to 35 U.S.C. 154(b)(4)(A)concerning the same patent at issue in this request.

Patentee may file a reply to this decision dismissing the Request for Recalculation. Patentee must file such reply within one month or thirty days, whichever is longer, of the mail date of the decision dismissing the Request for Recalculation. No fee is required if patentee is asserting in the reply that the dismissal for ineligibility is improper.

Patentee should use document code PET.OP if electronically filing a reply to this dismissal. If the USPTO finds that the request was improperly deemed ineligible, the USPTO will mail applicant a recalculation determination.

Patentee should be aware that in order to preserve the right to review in the United States District Court for the District of Columbia of the USPTO patent term adjustment determination, patentee must ensure that he or she also take the steps required under 35 U.S.C. 154(b)(4)(A). Nothing in the request for recalculation should be construed as providing an alternative time frame for commencing a civil action under 35 U.S.C. 154 (b)(4)(A).

Any questions concerning this decision should be directed to the Office of Patent Legal Administration at 571-272-7702.

UNITED STATES PATENT AND TRADEMARK OFFICE

UNITED STATES DEPARTMENT OF COMMERCE
United States Patent and Trademark Office
Address: COMMISSIONER FOR PATENTS
P.O. Box 1450
Alexandria, Virginia 22313-1450
www.uspto.gov

JOHN A. SMART
201 LOS GATOS
SARATOGA RD, #161
LOS GATOS, CA 95030-5308

Mail Date: 05/18/2010

Applicant : Sudipto R. Chowdhuri
Patent Number : 7574424
Issue Date : 08/11/2009
Application No: 10/711,931
Filed : 10/13/2004

: NOTICE CONCERNING IMPROPER
: DISMISSAL OF THE REQUEST
: FOR RECALCULATION OF
: PATENT TERM ADJUSTMENT
: IN VIEW OF WYETH

The United States Patent and Trademark Office (USPTO) discovered that in processing the recent recalculation decisions mailed in response to patentee's filed Request for Recalculation of Patent Term Adjustment in view of Wyeth, the USPTO mistakenly dismissed a small number of requests as ineligible. The dismissals involve requests that were filed on February 9-12, 2010, for patents that were granted on August 11, 2009. Any request that was filed on February 8, 2010 was properly deemed eligible for patent term adjustment (PTA) and was recalculated.

Patents meeting the above criteria were eligible because the USPTO was closed February 8-11, 2010, due to a snowstorm. See Closing of the United States Patent and Trademark Office from Monday February, 8, 2010, through Thursday, February 11, 2010, 1352 *Off. Gaz. Pat. Office* 146 (March 16, 2010). The Office considered each day from Monday, February 8, 2010, through Thursday, February 11, 2010, to be a "Federal holiday within the District of Columbia" under 35 U.S.C. § 21(b) and 37 CFR 1.6, 1.7, 1.9, 2.2(d), 2.195 and 2.196. Any actions that were due from Monday, February, 8, 2010, through Thursday, February 11, 2010, (or the preceding Saturday (February 6, 2010) or Sunday (February 7, 2010)) will be considered timely if the action was taken on the next succeeding business day on which the USPTO was open, which was February 12, 2010.

This notice **VACATES** the previous mailed decision in the patented file that deemed patentee ineligible for the request for recalculation. Patentee's request for recalculation is GRANTED.

The patent term adjustment has been determined to be **199** days. The USPTO will *sua sponte* issue a certificate of correction reflecting the amount of PTA days determined by the recalculation.

Prior to the issuance of the certificate of correction, the USPTO will afford patentee an opportunity to be heard and request reconsideration. Accordingly, patentee has **one month or thirty (30) days** from the mail date of this notice, whichever is longer, to file a request for reconsideration of this PTA calculation. See 35 U.S.C. § 154(b)(3)(B)(ii) and 37 CFR 1.322(a)(4).

Patentee should use document code PET.OP if electronically filing a request for reconsideration of this PTA calculation. The patentee must also include the information required by 37 CFR 1.705(b)(2) and the fee required by 37 CFR 1.18(e). If patentee does not file a timely request for reconsideration of this PTA calculation, including the information required by 37 CFR 1.705(b)(2) and the fee required by 37 1.18(e), the USPTO will issue a certificate of correction reflecting the PTA determination noted above.

Patentee should be aware that in order to preserve the right of review of the USPTO's PTA deterimation in the United States District Court for the District of Columbia, patentee must ensure that the steps required under 35 U.S.C. § 154(b)(4) are taken in a timely manner. Nothing in the request for recalculation should be construed as providing an alternative time frame for commencing a civil action under 35 U.S.C. § 154(b)(4).

UNITED STATES PATENT AND TRADEMARK OFFICE

Commissioner for Patents
United States Patent and Trademark Office
P.O. Box 1450
Alexandria, VA 22313-1450
www.uspto.gov

WOMBLE CARLYLE SANDRIDGE & RICE, PLLC
ATTN: PATENT DOCKETING 32ND FLOOR
P.O. BOX 7037
ATLANTA GA 30357-0037

COPY MAILED

DEC 0 8 2008

OFFICE OF PETITIONS

In re Application of :
BREINING et al. : DECISION ON APPLICATION
Application No. 10/711,969 : FOR
Filed: October 15, 2004 : PATENT TERM ADJUSTMENT
Atty Docket No. T103 1580.1 :

This is a decision on the "REQUEST FOR RECONSIDERATION OF PATENT TERM ADJUSTMENT (37 C.F.R. §§ 1.705 and 1.18(e)," which is properly being treated as a petition under 37 CFR 1.705(b), filed May 19, 2008. Applicants request that the determination of patent term adjustment under 35 U.S.C. 154(b) be corrected from 500 days to 502 days.

The application for patent term adjustment is **DISMISSED**.

On March 10, 2008, the Office mailed the Determination of Patent Term Adjustment under 35 U.S.C. 154(b) in the above-identified application. The Notice stated that the patent term adjustment to date was 500 days. On May 19, 2008, applicants timely submitted the instant application for patent term adjustment[1]. Thereafter, on July 22, 2008, the above-identified application matured into Patent No. 7,402,592. The patent issued with a Patent Term Adjustment of 500 days.

Applicants dispute the reduction pursuant to 37 CFR 1.704(b) of 2 days for the filing of the response to the Restriction

[1] PALM records show that the Issue Fee was received on June 9, 2008.

Requirement. Applicants state that the patent issuing from this application is not subject to a terminal disclaimer.

A review of the application history supports a conclusion that the number of days adjusted for Office delay and the number of days reduced for applicants' delay is correct.

Applicants request the removal of the reduction of 2 days on the ground that the response was filed timely on July 31, 2007, within three months of the mail date of the Restriction Requirement. Applicants state that the response included a certificate of mailing dated July 31, 2007. Applicants assert that the filing date of the response on July 31, 2007, not the date of submission of August 3, 2007, should be used in calculating patent term adjustment.

A review of the application history reveals that applicants were properly assessed a delay of 2 days pursuant to 37 CFR 1.704(b). Calculation of applicants' delay is based on the date of receipt of the response in the Office. In this regard, applicants' attention is directed to 37 CFR 1.703(f), which provides that "[t]he date indicated on any certificate of mailing or transmission under § 1.8 shall not be taken into account in this calculation" of patent term adjustment. Furthermore, as stated in Section 2731 of the Manual of Patent Examining Procedure:

> The date indicated on a certificate of mailing is used only to determine whether the correspondence is timely (including whether any extension of the time and fee are required) so as to avoid abandonment of the application or termination or dismissal of proceedings. The actual date of receipt of the correspondence in the Office is used for all other purposes. See 37 CFR 1.8(a). Thus, while the date indicated on any certificate of mailing or transmission under 37 CFR 1.8 will continue to be taken into account in determining timeliness, the date of filing (37 CFR 1.6) will be the date used in a patent term adjustment calculation.

Applicants' response was received on August 3, 2007. Thus, the period of adjustment was properly reduced by 2 days, the number of days in the period beginning on the day after the date that is three months after the date of mailing of the Restriction Requirement, August 2, 2007, and ending on the date the reply

was filed, August 3, 2007. As applicants failed to engage in reasonable efforts to conclude prosecution of the application, the period of reduction of 2 days is warranted and will not be removed.

In view thereof, the determination of patent term adjustment remains 500 days.

Receipt of the $200.00 fee set forth in 37 CFR 1.18(e) is acknowledged. No additional fees are required.

Telephone inquiries specific to this matter should be directed to Christina Tartera Donnell, Senior Petitions Attorney, at (571) 272-3211.

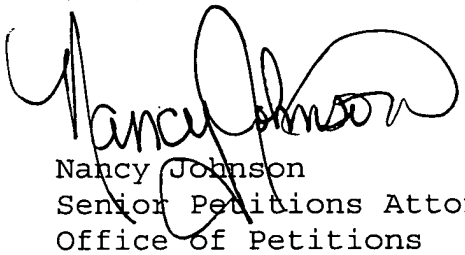

Nancy Johnson
Senior Petitions Attorney
Office of Petitions

SPE RESPONSE FOR CERTIFICATE OF CORRECTION

Paper No.:20080919

DATE : September 19, 2008

TO SPE OF : ART UNIT 2617

SUBJECT : Request for Certificate of Correction on Patent No.: 7228155

A response is requested with respect to the accompanying request for a certificate of correction.

Please complete this form and return with file, within **7** days to:
Certificates of Correction Branch - ST (South Tower) 9A22
Palm location **7590** - Tel. No. (703) 305-8309

With respect to the change(s) requested, correcting Office and/or Applicant's errors, should the patent read as shown in the certificate of correction? No new matter should be introduced, nor should the scope or meaning of the claims be changed.

Thank You For Your Assistance **Certificates of Correction Branch**

The request for issuing the above-identified correction(s) is hereby:

Note your decision on the appropriated box.

☒ **Approved** All changes apply.

☐ **Approved in Part** Specify below which changes **do not** apply.

☐ **Denied** State the reasons for denial below.

Comments:

/Dwayne D Bost/
Supervisory Patent Examiner.Art Unit 2617

UNITED STATES PATENT AND TRADEMARK OFFICE

Commissioner for Patents
United States Patent and Trademark Office
P.O. Box 1450
Alexandria, VA 22313-1450
www.uspto.gov

HARNESS, DICKEY & PIERCE, P.L.C.
P.O. BOX 8910
RESTON VA 20195

COPY MAILED

DEC 28 2007

OFFICE OF PETITIONS

In re Application of	:	
Puester et al.	:	
Application No. 10/712,018	:	DECISION ON PETITIONS
Filed: November 14, 2003	:	UNDER 37 CFR 1.78(a)(3)
Attorney Docket No. 91000-000010/US	:	AND 37 CFR 1.55(c)

This is a decision on the petitions under 37 CFR 1.78(a)(3) and 37 CFR 1.55(c), filed August 17, 2007, to accept an unintentionally delayed claim under 35 U.S.C. § 120 for the benefit of priority to prior-filed nonprovisional applications, and under 35 U.S.C. § 119(a)-(d) for the benefit of priority to a prior-filed foreign application, as set forth in the concurrently filed amendment.

As to the benefit claim under 37 CFR 1.78(a)(3):

A petition for acceptance of a claim for late priority under 37 CFR 1.78(a)(3) is only applicable to those applications filed on or after November 29, 2000 and after the expiration of the period specified in 37 CFR 1.78(a)(2)(ii). In addition, the petition under 37 CFR 1.78(a)(3) must be accompanied by:

(1) the reference required by 35 U.S.C. § 120 and 37 CFR 1.78(a)(2)(i) of the prior-filed application, unless previously submitted;
(2) the surcharge set forth in § 1.17(t); and
(3) a statement that the entire delay between the date the claim was due under 37 CFR 1.78(a)(2)(ii) and the date the claim was filed was unintentional. The Director may require additional information where there is a question whether the delay was unintentional.

All requirements being met, the petition to accept an unintentionally delayed claim for benefit of priority to the prior-filed nonprovisional applications under 35 U.S.C. § 120 is **GRANTED.**

The granting of the petition to accept the delayed benefit claim to the prior-filed applications under 37 CFR 1.78(a)(3) should not be construed as meaning that this application is entitled to the benefit of the prior-filed applications. In order for this application to be entitled to the benefit of the prior-filed applications, all other requirements under 35 U.S.C. § 120 and 37 CFR 1.78(a)(1) and (a)(2) must be met. Similarly, the fact that the corrected Filing Receipt accompanying this decision on petition includes the prior-filed applications should not be construed as meaning that applicant is entitled to the claim for benefit of priority to the prior-

filed applications noted thereon. Accordingly, the examiner will, in due course, consider this benefit claim and determine whether the application is entitled to the benefit of the earlier filing date.

A corrected Filing Receipt, which includes the priority claim to the prior-filed nonprovisional applications, accompanies this decision on petition.

As to the benefit claim under 37 CFR 1.55(c):

A petition under 37 CFR 1.55(c) to accept an unintentionally delayed claim for priority requires:

(1) The nonprovisional application claiming the benefit of an earlier filing date must be filed on or after November 29, 2000;

(2) the claim submitted with the petition must identify the prior foreign application for which priority is claimed, as well as any foreign application for the same subject matter and having a filing date before that of the application for which priority is claimed, by the application number, country, and the filing date, **and be included either in an oath or declaration (37 CFR 1.63(c)(2)) or in an Application Data Sheet (37 CFR 1.76(b)(6);**

(3) the surcharge as set forth in 37 CFR 1.17(t);

(4) a statement that the entire delay between the date the claim was due under 37 CFR 1.55(a)(1) and the date the claim was filed was unintentional. (The Director may require additional information where there is a question whether the delay was unintentional); and

(5) the above-identified nonprovisional application must be filed within 12 months of the filing date of the foreign application.

The petition under 37 CFR 1.55(c) is **DISMISSED**.

The petition fails to comply with item (2) above. In this regard, a review of the file record fails to disclose that the priority information was included in an oath or declaration or in an Application Data Sheet (ADS) in accordance with 37 CFR 1.76(b)(6). Unless provided in an ADS, 37 CFR 1.63(c)(2) requires that the oath or declaration must identify the foreign application for patent (or inventor's certificate) for which priority is claimed under 37 CFR 1.55, and any foreign application having a filing date before that of the application on which priority is claimed, by specifying the application number, country, day, month, and year of its filing. *Note* MPEP 201.14.

In view of the above, compliance with 37 CFR 1.63(c)(2) or 37 CFR 1.76(b)(6) must be satisfied if applicant desires to claim priority to the foreign application noted in the petition. Any future petition should include a cover letter and be entitled "Renewed Petition under 37 CFR 1.55(c)."

Further correspondence with respect to this matter should be addressed as follows:

By mail: Mail Stop PETITIONS
Commissioner for Patents
Post Office Box 1450
Alexandria, VA 22313-1450

By hand: Customer Service Window
Mail Stop Petitions
Randolph Building
401 Dulany Street
Alexandria, VA 22314

By fax: (571) 273-8300
ATTN: Office of Petitions

Any questions concerning this matter may be directed to Charlema Grant at (571) 272-3215.

Anthony Knight
Supervisor
Office of Petitions

ATTACHMENT: Corrected Filing Receipt

UNITED STATES PATENT AND TRADEMARK OFFICE

UNITED STATES DEPARTMENT OF COMMERCE
United States Patent and Trademark Office
Address: COMMISSIONER FOR PATENTS
P.O. Box 1450
Alexandria, Virginia 22313-1450
www.uspto.gov

APPLICATION NUMBER	FILING or 371(c) DATE	GRP ART UNIT	FIL FEE REC'D	ATTY.DOCKET.NO	TOT CLAIMS	IND CLAIMS
10/712,018	11/14/2003	1795	803	91000-000010/US	37	3

CONFIRMATION NO. 8387

CORRECTED FILING RECEIPT

30593
HARNESS, DICKEY & PIERCE, P.L.C.
P.O. BOX 8910
RESTON, VA 20195

Date Mailed: 12/28/2007

Receipt is acknowledged of this non-provisional patent application. The application will be taken up for examination in due course. Applicant will be notified as to the results of the examination. Any correspondence concerning the application must include the following identification information: the U.S. APPLICATION NUMBER, FILING DATE, NAME OF APPLICANT, and TITLE OF INVENTION. Fees transmitted by check or draft are subject to collection. Please verify the accuracy of the data presented on this receipt. **If an error is noted on this Filing Receipt, please write to the Office of Initial Patent Examination's Filing Receipt Corrections. Please provide a copy of this Filing Receipt with the changes noted thereon. If you received a "Notice to File Missing Parts" for this application, please submit any corrections to this Filing Receipt with your reply to the Notice. When the USPTO processes the reply to the Notice, the USPTO will generate another Filing Receipt incorporating the requested corrections**

Applicant(s)

Neil H. Puester, Aurora, CO;
David Hock, Castle Rock, CO;
Lars Fredriksson, Taby, SWEDEN;

Power of Attorney:

Terry Clark--32644	John Curtin--37602
Donald Daley--34313	Gregory Brummett--41646
John Castellano III--35094	Matthew Lattig--45274
Gary Yacura--35416	Timothy Wyckoff--46175
Thomas Auchterlonie--37275	Ronald Sulpizio--48781

Domestic Priority data as claimed by applicant

This application is a CIP of 10/434,168 05/09/2003 PAT 7,258,949

Foreign Applications

If Required, Foreign Filing License Granted: 02/09/2004

The country code and number of your priority application, to be used for filing abroad under the Paris Convention, is **US 10/712,018**

Projected Publication Date: Not Applicable

Non-Publication Request: No

Early Publication Request: No
**** SMALL ENTITY ****

Title

Gasket, a bipolar battery and a method for manufacturing a bipolar battery with such a gasket

Preliminary Class

429

PROTECTING YOUR INVENTION OUTSIDE THE UNITED STATES

Since the rights granted by a U.S. patent extend only throughout the territory of the United States and have no effect in a foreign country, an inventor who wishes patent protection in another country must apply for a patent in a specific country or in regional patent offices. Applicants may wish to consider the filing of an international application under the Patent Cooperation Treaty (PCT). An international (PCT) application generally has the same effect as a regular national patent application in each PCT-member country. The PCT process **simplifies** the filing of patent applications on the same invention in member countries, but **does not result** in a grant of "an international patent" and does not eliminate the need of applicants to file additional documents and fees in countries where patent protection is desired.

Almost every country has its own patent law, and a person desiring a patent in a particular country must make an application for patent in that country in accordance with its particular laws. Since the laws of many countries differ in various respects from the patent law of the United States, applicants are advised to seek guidance from specific foreign countries to ensure that patent rights are not lost prematurely.

Applicants also are advised that in the case of inventions made in the United States, the Director of the USPTO must issue a license before applicants can apply for a patent in a foreign country. The filing of a U.S. patent application serves as a request for a foreign filing license. The application's filing receipt contains further information and guidance as to the status of applicant's license for foreign filing.

Applicants may wish to consult the USPTO booklet, "General Information Concerning Patents" (specifically, the section entitled "Treaties and Foreign Patents") for more information on timeframes and deadlines for filing foreign patent applications. The guide is available either by contacting the USPTO Contact Center at 800-786-9199, or it can be viewed on the USPTO website at http://www.uspto.gov/web/offices/pac/doc/general/index.html.

For information on preventing theft of your intellectual property (patents, trademarks and copyrights), you may wish to consult the U.S. Government website, http://www.stopfakes.gov. Part of a Department of Commerce initiative, this website includes self-help "toolkits" giving innovators guidance on how to protect intellectual property in specific countries such as China, Korea and Mexico. For questions regarding patent enforcement issues, applicants may call the U.S. Government hotline at 1-866-999-HALT (1-866-999-4158).

LICENSE FOR FOREIGN FILING UNDER

Title 35, United States Code, Section 184

Title 37, Code of Federal Regulations, 5.11 & 5.15

GRANTED

The applicant has been granted a license under 35 U.S.C. 184, if the phrase "IF REQUIRED, FOREIGN FILING LICENSE GRANTED" followed by a date appears on this form. Such licenses are issued in all applications where the conditions for issuance of a license have been met, regardless of whether or not a license may be required as

set forth in 37 CFR 5.15. The scope and limitations of this license are set forth in 37 CFR 5.15(a) unless an earlier license has been issued under 37 CFR 5.15(b). The license is subject to revocation upon written notification. The date indicated is the effective date of the license, unless an earlier license of similar scope has been granted under 37 CFR 5.13 or 5.14.

This license is to be retained by the licensee and may be used at any time on or after the effective date thereof unless it is revoked. This license is automatically transferred to any related applications(s) filed under 37 CFR 1.53(d). This license is not retroactive.

The grant of a license does not in any way lessen the responsibility of a licensee for the security of the subject matter as imposed by any Government contract or the provisions of existing laws relating to espionage and the national security or the export of technical data. Licensees should apprise themselves of current regulations especially with respect to certain countries, of other agencies, particularly the Office of Defense Trade Controls, Department of State (with respect to Arms, Munitions and Implements of War (22 CFR 121-128)); the Bureau of Industry and Security, Department of Commerce (15 CFR parts 730-774); the Office of Foreign AssetsControl, Department of Treasury (31 CFR Parts 500+) and the Department of Energy.

NOT GRANTED

No license under 35 U.S.C. 184 has been granted at this time, if the phrase "IF REQUIRED, FOREIGN FILING LICENSE GRANTED" DOES NOT appear on this form. Applicant may still petition for a license under 37 CFR 5.12, if a license is desired before the expiration of 6 months from the filing date of the application. If 6 months has lapsed from the filing date of this application and the licensee has not received any indication of a secrecy order under 35 U.S.C. 181, the licensee may foreign file the application pursuant to 37 CFR 5.15(b).

UNITED STATES PATENT AND TRADEMARK OFFICE

Commissioner for Patents
United States Patent and Trademark Office
P.O. Box 1450
Alexandria, VA 22313-1450
www.uspto.gov

MAIL

NOV 2 6 2004

DIRECTOR OFFICE
TECHNOLOGY CENTER 2100

MATTINGLY, STANGER, & MALUR, P.C.
1800 DIAGONAL ROAD
SUITE 370
ALEXANDRIA, VIRGINIA 22314

In re Application of: Iwami, et al.
Application No. 10/712,031
Filed: November 14, 2003
For: STORAGE SYSTEM

DECISION ON PETITION
FOR ACCELERATED
EXAMINATION UNDER
M.P.E.P.§708.02(VIII)

This is a decision on the petition filed July 13, 2004 under 37 C.F.R. 102(d) and M.P.E.P. § 708.02(VIII): Accelerated Examination, to make the above-identified application special.

The Petition is **GRANTED**.

M.P.E.P. § 708.02, Section VIII which sets out the prerequisites for a grantable petition for Accelerated Examination under 37 C.F.R. § 102(d) states in relevant part:

A new application (one which has not received any examination by the examiner) may be granted special status provided that applicant (and this term includes applicant's attorney or agent) complies with each of the following items:

(a) Submits a petition to make special accompanied by the fee set forth in **37 CFR 1.17(h)**;

(b) Presents all claims directed to a single invention, or if the Office determines that all the claims presented are not obviously directed to a single invention, will make an election without traverse as a prerequisite to the grant of special status;

(c) Submits a statement(s) that a pre-examination search was made, listing the field of search by class and subclass, publication, Chemical Abstracts, foreign patents, etc. The pre-examination search must be directed to the invention as claimed in the application for which special status is requested. A search made by a foreign patent office satisfies this requirement;

(d) Submits one copy each of the references deemed most closely related to the subject matter encompassed by the claims if said references are not already of record; and

(e) Submits a detailed discussion of the references, which discussion points out, with the particularity required by 37 CFR 1.111 (b) and (c), how the claimed subject matter is patentable over the references.

Petition to Make Special **GRANTED** since all of the requirements for special status under MPEP § 708.02(VIII) have been met. **Applicant may wish to consider filing an Information Disclosure Statement (PTO-1449 or PTO-SB08A) for consideration of the references cited in the petition by the assigned examiner.**

The application file is being forwarded to the Examiner for accelerated examination in accordance with the procedures set forth in M.P.E.P. §708.02, Section VIII. If the application is subsequently allowed, it will be given priority for printing. See M.P.E.P. §1309.

Brian L. Johnson
Special Program Examiner
Technology Center 2100
Computer Architecture, Software and Information Security
571-272-3595

MBS

UNITED STATES PATENT AND TRADEMARK OFFICE

COMMISSIONER FOR PATENTS
UNITED STATES PATENT AND TRADEMARK OFFICE
P.O. BOX 1450
ALEXANDRIA, VA 22313-1450
WWW.USPTO.GOV

Paper No. None

BIRCH STEWART KOLASCH & BIRCH
PO BOX 747
FALLS CHURCH VA 22040-0747

COPY MAILED

APR 21 2004

OFFICE OF PETITIONS

In re Application of :
Herbert Cramer et al. :
Application No. 10/712,047 :
Filed: November 14, 2003 : DECISION ON PETITION
Attorney Docket No. 4086-0184P : UNDER 37 C.F.R. §1.182
Title: HEADLIGHT FOR MOTOR :
VEHICLES :

This is a decision on the petition filed February 19, 2004, which is being construed as a request to withdraw the notice mailed February 9, 2004.

On November 14, 2003, the above-identified application was deposited without an executed oath or declaration. On February 9, 2004, the Office of Initial Patent Examination (OIPE) mailed a "Notice to File Missing Parts of Nonprovisional Application - Filing Date Granted (notice)", advising applicant that the application and been accorded a filing date of November 14, 2003, and that it appeared to have been deposited without an executed oath or declaration. The notice indicated that an executed oath or declaration and the surcharge associated with the late filing of the same would be required. The notice set a two-month period for response.

On February 19, 2004, Petitioner submitted the instant petition, along with a postcard which shows that a "combined declaration & power of attorney" was received in the Office on January 14, 2004.

A review of the electronic file confirms that a declaration was received on January 14, 2004, along with the associated surcharge. It appears that this notice was mailed in error.

As such, the petition is **GRANTED**. The notice mailed February 9, 2004 is hereby **WITHDRAWN**. No petition fee has been charged to Petitioner's Deposit Account.

The application file is being returned to the Office of Initial Patent Examination for further processing using the original application papers filed on that date along with the declaration submitted on January 14, 2004.

Any inquiries related to this decision should be directed to the undersigned at (703) 305-0011.

Paul Shanoski
Senior Attorney
Office of Petitions
United States Patent and Trademark Office

SPE RESPONSE FOR CERTIFICATE OF CORRECTION

Paper No.: _____

DATE : 6-17-10

TO SPE OF : ART UNIT 2883

SUBJECT : Request for Certificate of Correction for Appl. No.: 10/712066 Patent No.: 7065267

Please respond to this request for a certificate of correction within 7 days.

FOR IFW FILES: Should CofC be approved

Please review the requested changes/corrections as shown in the **COCIN** document(s) in the IFW application image. No new matter should be introduced, nor should the scope or meaning of the claims be changed.

Please complete the response (see below) and forward the completed response to scanning using document code **COCX**.

FOR PAPER FILES:

Please review the requested changes/corrections as shown in the attached certificate of correction. Please complete this form (see below) and forward it with the file to:

Certificates of Correction Branch (CofC)
Randolph Square – 9D10-A
Palm Location 7580

Ennis Young LTE
Randolph Sq. Ste 9D62A
703-756-1542

Thank You For Your Assistance

The request for issuing the above-identified correction(s) is hereby:
Note your decision on the appropriate box.

☒ **Approved**	**All** changes apply.
☐ **Approved in Part**	Specify below which changes **do not** apply.
☐ **Denied**	State the reasons for denial below.

_____

_____

_____

SPE _____ **ART UNIT** 2883

Mark Robinson

UNITED STATES PATENT AND TRADEMARK OFFICE

UNITED STATES DEPARTMENT OF COMMERCE
United States Patent and Trademark Office
Address: COMMISSIONER FOR PATENTS
P.O. Box 1450
Alexandria, Virginia 22313-1450
www.uspto.gov

BIRCH STEWART KOLASCH & BIRCH
PO BOX 747
FALLS CHURCH, VA 22040-0747

Mail Date: 04/20/2010

Applicant	: Kazushige Sugimoto	: DECISION ON REQUEST FOR
Patent Number	: 7618569	: RECALCULATION of PATENT
Issue Date	: 11/17/2009	: TERM ADJUSTMENT IN VIEW
Appliction No	: 10/712,095	: OF WYETH AND NOTICE OF INTENT TO
Filed	: 11/14/2003	: ISSUE CERTIFICATE OF CORRECTION
		:

The Request for Recalculation is **GRANTED** to the extent indicated.

The patent term adjustment has been determined to be **486** days. The USPTO will *sua sponte* issue a certificate of correction reflecting the amount of PTA days determined by the recalculation.

Prior to the issuance of the certificate of correction, the USPTO will afford patentee an opportunity to be heard and request reconsideration. Accordingly, patentee has **one month or thirty (30) days**, whichever is longer, to file a request for reconsideration of this patent term adjustment calculation. See 35 U.S.C. 154(b)(3)(B)(ii) and 37 CFR 1.322(a)(4). No extensions of time will be granted under 37 CFR 1.136.

Patentee should use document code PET.OP if electronically filing a request for reconsideration of this patent term adjustment calculation. The patentee must also include the information required by 37 CFR 1.705(b)(2) and the fee required by 37 CFR 1.18(e). If patentee does not file a timely request for reconsideration of this patent term adjustment calculation including the information required by 37 CFR 1.705(b)(2) and the fee required by 37 CFR 1.18(e), the USPTO will issue a certificate of correction reflecting the PTA determination noted above.

Patentee should be aware that in order to preserve the right to review in the United States District Court for the District of Columbia of the USPTO patent term adjustment determination, patentee must ensure that he or she also take the steps required under 35 U.S.C. 154(b)(4)(A) in a timely manner. Nothing in the request for recalculation should be construed as providing an alternative time frame for commencing a civil action under 35 U.S.C. 154(b)(4)(A).

Any questions concerning this decision should be directed to the Office of Patent Legal Administration at 571-272-7702.

UNITED STATES PATENT AND TRADEMARK OFFICE

Commissioner for Patents
United States Patent and Trademark Office
P.O. Box 1450
Alexandria, VA 22313-1450
www.uspto.gov

COPY MAILED

JUL 0 3 2008

OFFICE OF PETITIONS

HICKMAN PALERMO TRUONG & BECKER, LLP
2055 GATEWAY PLACE
SUITE 550
SAN JOSE CA 95110

In re Application of :
Christopher Murray et al :
Application No. 10/712,130 : DECISION ON PETITION
Filed: November 12, 2003 :
Attorney Docket No. 50325-0818 :

This is a decision on the petition under 37 CFR 1.314, filed July 1, 2008, to defer issuance of the patent.

The petition is **GRANTED**.

Issuance will be deferred for a period of one month from the date of this decision. At the end of this period, the application will be referred to the Office of Data Management to be processed into a patent.

If an additional deferral period is required, another petition and fee should be promptly submitted. The petition must include a showing of extraordinary circumstances. See MPEP 1306.01.

Further correspondence with respect to this matter should be addressed as follows:

By mail: Mail Stop PETITION
Commissioner for Patents
Post Office Box 1450
Alexandria, VA 22313-1450

By hand: Customer Service Window
Mail Stop Petitions
Randolph Building
401 Dulany Street
Alexandria, VA 22314

By Fax: (571) 273-8300
ATTN: Office of Petitions

Telephone inquiries should be directed to the undersigned at (571) 272-3208.

Karen Creasy
Petitions Examiner
Office of Petitions

UNITED STATES PATENT AND TRADEMARK OFFICE

Commissioner for Patents
United States Patent and Trademark Office
P.O. Box 1450
Alexandria, VA 22313-1450
www.uspto.gov

HICKMAN PALERMO TRUONG & BECKER, LLP
2055 GATEWAY PLACE
SUITE 550
SAN JOSE, CA 95110

COPY MAILED

JAN 07 2009

OFFICE OF PETITIONS

In re Patent No. 7,421,695	:	
Issue Date: September 2, 2008	:	
Application No. 10/712,130	:	ON PETITION
Filed: November 12, 2003	:	
Attorney Docket No. 50325-0818	:	

This is a decision on the petition under 37 CFR1.183, filed September 10, 2008, which is being treated as a request under 37 CFR 3.81(b)[1] to correct the name of the assignee on the front page of the above-identified patent by way of a Certificate of Correction.

The request is **GRANTED**.

Telephone inquiries concerning this decision may be directed to the undersigned at (571) 272-3204. Inquiries regarding the issuance of a certificate of correction should be directed to the Certificates of Correction Branch at (571) 272-4200.

The Certificates of Correction Branch will be notified of this decision granting the petition under 37 CFR 3.81(b) and directing issuance of the requested Certificate of Correction.

Sherry D. Brinkley
Petitions Examiner
Office of Petitions

[1] *See* MPEP 1309, subsection II; and Official Gazette of June 22, 2004.

IN THE UNITED STATES PATENT AND TRADEMARK OFFICE

In re application of:	Group Art Unit No.: 2141
Christopher Murray, et al.	Examiner: Le Luu
Serial No.: 10/712,130	Confirmation No.: 8180
Filed on: November 12, 2003	
For: System and Methodology for Adaptive Load Balancing With Behavior Modification Hints	

Mail Stop Petition
Commissioner for Patents
P.O. Box 1450
Alexandria, VA 22313-1450

PETITION UNDER 37 C.F.R 1.183 AND REQUEST FOR CERTIFICATE OF CORRECTION PURSUANT TO 37 C.F.R. § 1.323

Sir:

Applicants hereby respectfully petition for waiver of the requirements of 37 C.F.R. 3.81(a). Applicants further request issuance of a certificate of correction of U.S. Patent No. 7,421,695 ("subject patent") that indicates that the subject patent issued to the assignee **Cisco Technology, Inc.** of **San Jose, California**.

Applicants paid the issue fee for the subject patent on July 1, 2008. At the time the issue fee was paid, an assignment of the subject matter of the subject patent had been submitted for recordation. The assignment was recorded at reel 014698 frame 0904 on November 12, 2003 which is well before date the issue fee was paid. Thus, at the time the issue fee was paid, a properly executed assignment of the subject matter of the subject patent had been properly recorded. For ease of reference, a copy of the recorded assignment is attached herewith.

Adjustment date: 01/07/2009 CKHLOK
09/10/2008 INTEFSW 00007699 10712130
01 FC:1464 -130.00 OP
02 FC:1811 -100.00 OP

01/07/2009 CKHLOK 00000009 7421695

01 FC:1808 130.00 OP
02 FC:1811 100.00 OP

The Office of Petitions is respectfully requested to contact the undersigned by telephone if it is believed that such contact would further the consideration of this petition.

Pursuant to 37 C.F.R. § 1.183, payment of the fee as specified in 37 C.F.R. § 1.17(h) is submitted concurrently herewith. Pursuant to 37 C.F.R. § 1.323, payment of the fee as specified in 37 C.F.R. § 1.20(a) is also submitted concurrently herewith. To the extent necessary, a petition for an extension of time under 37 C.F.R. § 1.136 is hereby made. Please charge any shortages or credit any overages to Deposit Account No. 50-1302.

Respectfully submitted,

Hickman Palermo Truong & Becker LLP

Date: September 10, 2008

/AdamCStone#60531/

Adam Christopher Stone
Reg. No. 60,531

2055 Gateway Place, Suite 550
San Jose, California 95110-1089
Telephone No.: (408) 414-1080 ext. 231
Facsimile No.: (408) 414-1076

SPE RESPONSE FOR CERTIFICATE OF CORRECTION

Paper No.: _____

DATE : March 27, 2006

TO SPE OF : ART UNIT 2817

SUBJECT : Request for Certificate of Correction for Appl. No.: 10/712136 Patent No.: 6,982,594

Please respond to this request for a certificate of correction within 7 days.

Please review the requested changes/corrections as shown in the **COCIN** document(s) in the IFW application image. No new matter should be introduced, nor should the scope or meaning of the claims be changed.

Please complete the response (see below) and forward the completed response to scanning using document code **COCX**.

Magdalene Talley

Certificates of Correction Branch

703-308-9390 ext. 116

Thank You For Your Assistance

The request for issuing the above-identified correction(s) is hereby:

Note your decision on the appropriate box.

- ☑ **Approved** — **All** changes apply.
- ☐ **Approved in Part** — Specify below which changes **do not** apply.
- ☐ **Denied** — State the reasons for denial below.

Comments: _____

Robert Pascal
Supervisory Patent Examiner
Technology Center 2800

SPE

2817
Art Unit

UNITED STATES PATENT AND TRADEMARK OFFICE

COMMISSIONER FOR PATENTS
UNITED STATES PATENT AND TRADEMARK OFFICE
P.O. BOX 1450
ALEXANDRIA, VA 22313-1450
www.uspto.gov

DANNY L. WILLIAMS
WILLIAMS, MORGAN & AMERSON, P.C.
SUITE 1100
10333 RICHMOND
HOUSTON TX 77042

COPY MAILED

APR 21 2004

OFFICE OF PETITIONS

In re Application of
Todd A. Merritt et al.
Application No. 10/712,150
Filed: November 13, 2003
Attorney Docket No. 2008.001982

DECISION REFUSING STATUS
UNDER 37 CFR 1.47(a)

This is in response to the petition filed under 37 CFR 1.47(a) on February 27, 2004.

The petition is **DISMISSED**.

Rule 47 applicant is given TWO MONTHS from the mailing date of this decision to respond, correcting the below-noted deficiencies. Any response should be entitled "Request for Reconsideration of Petition Under 37 CFR 1.47(a)" and may include an oath or declaration executed by the inventor. **Failure to respond will result in abandonment of the application.** Any extensions of time will be governed by 37 CFR 1.136(a).

The above-identified application was filed on November 13, 2003. The application names Todd A. Merritt and Nicholas VanHeel but the oath or declaration filed upon application was not executed by Mr. VanHeel.

Accordingly, on February 12, 2004, a "Notice To File Missing Parts of Application" was mailed, requiring, *inter alia*, an executed oath or declaration, and a surcharge for its late filing. A two month period for reply was set.

In response, on February 27, 2004, the present petition was filed. Petitioners assert that diligent efforts were used to locate Mr. VanHeel and show that Internet searches as well as directory assistance searches were conducted, that correspondences were sent to addresses in Idaho and Connecticut but that to date, Nicholas VanHeel has not contacted them to confirm that the addresses used were in fact proper addresses for the intended joint inventor.

A grantable petition under 37 CFR 1.47(a) requires:

(1) proof that the non-signing inventor cannot be reached or refuses to sign the oath or declaration after having been presented with the application papers (specification, claims and drawings);

(2) an acceptable oath or declaration in compliance with 35 U.S.C. §§ 115 and 116;

(3) the petition fee; and

(4) a statement of the last known address of the non-signing inventor.

The present petition lacks items (4).

In regards to item (4), the last known addresses of joint inventor Nicholas VanHeel has not been provided as required by 37 CFR 1.47. Petitioners must provide a statement of

the last known address of the nonsigning inventors. That address should be the last known address at which the inventors customarily receive mail. Ordinarily, the last known address will be the last known residence of the nonsigning inventor. While Internet searches and directory assistance inquiries show diligent efforts, diligent efforts to locate a non-signing inventor should at least start with the last known address of the non signing inventor.

Status under 37 CFR 1.47(a) cannot be accorded this application until such time as efforts to reach Nicholas VanHeel have been attempted at the last known address.

Further correspondence with respect to this matter should be addressed as follows:

By mail: Mail Stop Petition
P.O. Box 1450
Alexandria, VA 22313-1450

By FAX: (703) 872-9306

Telephone inquiries related to this decision should be directed to the undersigned Petitions Attorney at (703) 305-4497.

Patricia Faison-Ball

Patricia Faison-Ball
Senior Petitions Attorney
Office of Petitions

UNITED STATES PATENT AND TRADEMARK OFFICE

Commissioner for Patents
United States Patent and Trademark Office
P.O. Box 1450
Alexandria, VA 22313-1450
www.uspto.gov

DANNY L. WILLIAMS
WILLIAMS, MORGAN & AMERSON, P.C.
SUITE 1100
10333 RICHMOND
HOUSTON TX 77042

COPY MAILED

JUL 22 2004

OFFICE OF PETITIONS

In re Application of
Todd A. Merritt et al.
Application No. 10/712,150
Filed: November 13, 2003
Attorney Docket No. 2008.001982

: DECISION ACCORDING STATUS
: UNDER 37 CFR 1.47(a)

This is in response to the renewed petition filed under 37 CFR 1.47(a) on June 29, 2004 (certificate of mail date, June 21, 2004).

The petition is GRANTED.

The above-identified application was filed on November 13, 2003. The application names Todd A. Merritt and Nicholas VanHeel but the oath or declaration filed upon application was not executed by Mr. VanHeel. Accordingly, on February 12, 2004, a "Notice To File Missing Parts of Application" was mailed, requiring, *inter alia*, an executed oath or declaration, and a surcharge for its late filing. A two month period for reply was set.

In response, on February 27, 2004, a petition was filed. Petitioners asserted that diligent efforts were used to locate Mr. VanHeel and show that Internet searches as well as directory assistance searches were conducted, that correspondences were sent to addresses in Idaho and Connecticut but Nicholas VanHeel had not contacted them to confirm that the addresses used were in fact proper addresses for the intended joint inventor. The petition was dismissed in a decision mailed April 21, 2004 because the last known address of Mr. VanHeel had not been provided.

A grantable petition under 37 CFR 1.47(a) requires: (1) proof that the non-signing inventor cannot be reached or refuses to sign the oath or declaration after having been presented with the application papers (specification, claims and drawings); (2) an acceptable oath or declaration in compliance with 35 U.S.C. §§ 115 and 116; (3) the petition fee; and (4) a statement of the last known address of the non-signing inventor. The above-identified application and papers have been reviewed and found in compliance with 37 CFR 1.47(a). In view thereof, this application is hereby accorded Rule 1.47(a) status.

In response to the decision dismissing the petition filed February 27, 2004, a statement regarding the last known address has been provided and proof of a subsequent unsuccessful attempt to deliver correspondence to Mr. VanHeel at that address.

Thus, as provided in Rule 1.47(c), this Office will forward notice of this application's filing to the non-signing inventors at the address given in the petition. Notice of the filing of this application will also be published in the Official Gazette.

This application will be forwarded to Technology Center 2133 for further examination.

Telephone inquiries related to this decision should be directed to the undersigned Petitions Attorney at (703) 305-4497.

Patricia Faison-Ball

Patricia Faison-Ball
Senior Petitions Attorney
Office of Petitions

UNITED STATES PATENT AND TRADEMARK OFFICE

Commissioner for Patents
United States Patent and Trademark Office
P.O. Box 1450
Alexandria, VA 22313-1450
www.uspto.gov

NICHOLAS VAN HEEL
1313 S. WATERMARK AVENUE
EAGLE, ID 83616-6337

COPY MAILED

JUL 22 2004

OFFICE OF PETITIONS

In re Application of
Todd A. Merritt et al.
Application No. 10/712,150
Filed: November 13, 2003
Title of Invention: COMPRESSION CIRCUIT FOR TESTING A MEMORY DEVICE

Dear Mr. Van Heel:

You are named as a joint inventor in the above identified United States patent application, filed under the provisions of 35 U.S.C. 116 (United States Code), and 37 CFR 1.47(a), Rules of Practice in Patent Cases. Should a patent be granted on the application you will be designated therein as a joint inventor.

As a named inventor you are entitled to inspect any paper in the file wrapper of the application, order copies of all or any part thereof (at a prepaid cost per 37 CFR 1.19) or make your position of record in the application. Alternatively, you may arrange to do any of the preceding through a registered patent attorney or agent presenting written authorization from you. If you care to join the application, counsel of record (see below) would presumably assist you. Joining in the application would entail the filing of an appropriate oath or declaration by you pursuant to 37 CFR 1.63.

Telephone inquiries regarding this communication should be directed to the undersigned Petitions Attorney at (703) 305-4497. Requests for information regarding your application should be directed to the File Information Unit at 703/308-2733. Information regarding how to pay for and order a copy of the application, or a specific paper in the application, should be directed to Certification Division at 703/308-9726 or 1-800-972-6382 (outside the Washington D.C. area).

Patricia Faison-Ball
Senior Petitions Attorney
Office of Petitions

cc:
DANNY L. WILLIAMS
WILLIAMS, MORGAN & AMERSON, P.C.
SUITE 1100
10333 RICHMOND
HOUSTON TX 77042

UNITED STATES PATENT AND TRADEMARK OFFICE

UNITED STATES DEPARTMENT OF COMMERCE
United States Patent and Trademark Office
Address: COMMISSIONER FOR PATENTS
P.O. Box 1450
Alexandria, Virginia 22313-1450
www.uspto.gov

FINNEGAN, HENDERSON, FARABOW, GARRETT & DUNNER LLP
901 NEW YORK AVENUE, NW
WASHINGTON, DC 20001-4413

Mail Date: 04/21/2010

Applicant	: Erol Bozak	: DECISION ON REQUEST FOR
Patent Number	: 7574707	: RECALCULATION of PATENT
Issue Date	: 08/11/2009	: TERM ADJUSTMENT IN VIEW
Appliction No	: 10/712,154	: OF WYETH AND NOTICE OF INTENT TO
Filed	: 11/12/2003	: ISSUE CERTIFICATE OF CORRECTION
		:

The Request for Recalculation is **GRANTED** to the extent indicated.

The patent term adjustment has been determined to be **908** days. The USPTO will *sua sponte* issue a certificate of correction reflecting the amount of PTA days determined by the recalculation.

Prior to the issuance of the certificate of correction, the USPTO will afford patentee an opportunity to be heard and request reconsideration. Accordingly, patentee has **one month or thirty (30) days**, whichever is longer, to file a request for reconsideration of this patent term adjustment calculation. See 35 U.S.C. 154(b)(3)(B)(ii) and 37 CFR 1.322(a)(4). No extensions of time will be granted under 37 CFR 1.136.

Patentee should use document code PET.OP if electronically filing a request for reconsideration of this patent term adjustment calculation. The patentee must also include the information required by 37 CFR 1.705(b)(2) and the fee required by 37 CFR 1.18(e). If patentee does not file a timely request for reconsideration of this patent term adjustment calculation including the information required by 37 CFR 1.705(b)(2) and the fee required by 37 CFR 1.18(e), the USPTO will issue a certificate of correction reflecting the PTA determination noted above.

Patentee should be aware that in order to preserve the right to review in the United States District Court for the District of Columbia of the USPTO patent term adjustment determination, patentee must ensure that he or she also take the steps required under 35 U.S.C. 154(b)(4)(A) in a timely manner. Nothing in the request for recalculation should be construed as providing an alternative time frame for commencing a civil action under 35 U.S.C. 154(b)(4)(A).

Any questions concerning this decision should be directed to the Office of Patent Legal Administration at 571-272-7702.

UNITED STATES PATENT AND TRADEMARK OFFICE

UNITED STATES DEPARTMENT OF COMMERCE
United States Patent and Trademark Office
Address: COMMISSIONER FOR PATENTS
P.O. Box 1450
Alexandria, Virginia 22313-1450
www.uspto.gov

FINNEGAN, HENDERSON, FARABOW, GARRETT & DUNNER LLP
901 NEW YORK AVENUE, NW
WASHINGTON, DC 20001-4413

Mail Date: 05/18/2010

Applicant : Erol Bozak
Patent Number : 7574707
Issue Date : 08/11/2009
Application No: 10/712,154
Filed : 11/12/2003

: NOTICE CONCERNING IMPROPER
: CALCULATION OF PATENT TERM
: ADJUSTMENT BASED UPON USPTO
: IMPROPERLY MEASURING REDUCTION
: PERIOD UNDER 37 CFR 1.704(c)(10).

The United States Patent and Trademark Office (USPTO) discovered that in processing the recent recalculation decisions mailed in response to patentee's filed Request for Recalculation of Patent Term Adjustment in view of Wyeth, the USPTO improperly measured the reduction period for reductions under 37 CFR 1.704(c)(10). Pursuant to 37 CFR 1.704(c)(10), patentee's reduction begins on the date of filing the amendment under 37 CFR 1.312 ("1.312 amendment") or other related paper and ends on the date that the Office mails a response to the filing of the 1.312 amendment or other paper. It has been discovered that during the recalculation, the calculation failed to the limit the reduction to the mail date of the response to the 1.312 amendment or other paper. Accordingly, patentee's reductions were greater than warranted.

This notice **VACATES** the previous GRANTED request for recalculation and provides patentee with a revised GRANTED recalculation.

The patent term adjustment has been determined to be **1001** days. The USPTO will *sua sponte* issue a certificate of correction reflecting the amount of patent term adjustment (PTA) days determined by the recalculation.

Prior to the issuance of the certificate of correction, the USPTO will afford patentee an opportunity to be heard and request reconsideration. Accordingly, patentee has **one month or thirty (30) days** from the mail date of this notice, whichever is longer, to file a request for reconsideration of this PTA calculation. See 35 U.S.C. § 154(b)(3)(B)(ii) and 37 CFR 1.322(a)(4).

Patentee should use document code PET.OP if electronically filing a request for reconsideration of this PTA calculation. The patentee must also include the information required by 37 CFR 1.705(b)(2), and the fee required by 37 CFR 1.18(e). If patentee does not file a timely request for reconsideration of this PTA calculation, including the information required by 37 CFR 1.705(b)(2) and the fee required by 37 CFR 1.18(e), the USPTO will issue a certificate of correction reflecting the PTA determination noted above.

Patentee should be aware that in order to preserve the right of review of the USPTO's PTA determination in the United States District Court for the District of Columbia, patentee must ensure that the steps required under 35 U.S.C. § 154 (b)(4) are taken in a timely manner. Nothing in the request for recalculation should be construed as providing an alternative time frame for commencing a civil action under 35 U.S.C. § 154(b)(4).

UNITED STATES PATENT AND TRADEMARK OFFICE

UNITED STATES DEPARTMENT OF COMMERCE
United States Patent and Trademark Office
Address: COMMISSIONER FOR PATENTS
P.O. Box 1450
Alexandria, Virginia 22313-1450
www.uspto.gov

SAP / FINNEGAN, HENDERSON LLP
901 NEW YORK AVENUE, NW
WASHINGTON, DC 20001-4413

Mail Date: 04/28/2010

Applicant	: Erol Bozak	: DECISION ON REQUEST FOR
Patent Number	: 7673054	: RECALCULATION of PATENT
Issue Date	: 03/02/2010	: TERM ADJUSTMENT IN VIEW
Application No	: 10/712,156	: OF WYETH
Filed	: 11/12/2003	:
		:

The Patentee's Request for Recalculation is **DISMISSED.**

This Request is deemed ineligible for consideration for one or more of the following reasons:

(A). The patent for which PTA recalculation is requested is either a design or reissue application or is a reexamination proceeding;

(B). The patent for which PTA recalculation is requested resulted from a utility or plant application filed under 35 USC 111(a) before May 29, 2000 and no CPA filed in the application on/after May 29, 2000;

(C). The patent for which PTA recalculation is requested resulted from an international application in which the international filing date was before May 29, 2000 and no CPA filed in the application on/after May 29, 2000;

(D). The patent for which PTA recalculation is requested issued on/after March 2, 2010;

(E). The Request for Recalculation was filed more than 180 days after the grant date of the patent and the request was not filed within two months of a dismissal of a request for reconsideration of the of the patent term under 37 CFR 1.705(d);

(F). The Request for Recalculation is not solely limited to USPTO pre-Wyeth interpretation of 35 U.S.C. 154(b)(2)(A);

or

(G). A civil action was filed pursuant to 35 U.S.C. 154(b)(4)(A)concerning the same patent at issue in this request.

Patentee may file a reply to this decision dismissing the Request for Recalculation. Patentee must file such reply within one month or thirty days, whichever is longer, of the mail date of the decision dismissing the Request for Recalculation. No fee is required if patentee is asserting in the reply that the dismissal for ineligibility is improper.

Patentee should use document code PET.OP if electronically filing a reply to this dismissal. If the USPTO finds that the request was improperly deemed ineligible, the USPTO will mail applicant a recalculation determination.

Patentee should be aware that in order to preserve the right to review in the United States District Court for the District of Columbia of the USPTO patent term adjustment determination, patentee must ensure that he or she also take the steps required under 35 U.S.C. 154(b)(4)(A). Nothing in the request for recalculation should be construed as providing an alternative time frame for commencing a civil action under 35 U.S.C. 154 (b)(4)(A).

Any questions concerning this decision should be directed to the Office of Patent Legal Administration at 571-272-7702.

UNITED STATES PATENT AND TRADEMARK OFFICE

Commissioner for Patents
United States Patent and Trademark Office
P.O. Box 1450
Alexandria, VA 22313-1450
www.uspto.gov

CNH AMERICA LLC - ISSUED PATENTS
INTELLECTUAL PROPERTY LAW DEPARTMENT
PO BOX 1895, M.S. 641
NEW HOLLAND, PA 17557

COPY MAILED

MAR 10 2006

OFFICE OF PETITIONS

In re Application of	:	
Peter J. Dix et al	:	DECISION ON PETITION
Application No. 10/712,160	:	TO WITHDRAW
Filed: November 12, 2003	:	FROM RECORD
Attorney Docket No. 17364	:	

This is a decision on the Request to Withdraw as attorney or agent of record under 37 C.F.R. § 1.36(b), filed january 17, 2006.

The request is **NOT APPROVED**.

A review of the file record indicates that Stephen Michael Patton does not have power of attorney in this patent application. Accordingly, the request to withdraw under 37 C.F.R. § 1.36(b) is not applicable.

All future communications from the Office will continue to be directed to the above-listed address until otherwise notified by applicants.

Telephone inquires concerning this decision should be directed to Wan Laymon at 571-272-3220.

This matter is being referred to Technology Center AU 2635.

Denise Pothier
Petitions Examiner
Office of Petitions

SPE RESPONSE FOR CERTIFICATE OF CORRECTION

Paper No.:20060720

DATE : July 20, 2006

TO SPE OF : ART UNIT 3744

SUBJECT : Request for Certificate of Correction on Patent No.: 6,931,885

A response is requested with respect to the accompanying request for a certificate of correction.

Please complete this form and return with file, within **7** days to:
Certificates of Correction Branch - PK 3-910
Palm location **7590** - Tel. No. 305-8201

With respect to the change(s) requested, correcting Office and/or Applicant's errors, should the patent read as shown in the certificate of correction? No new matter should be introduced, nor should the scope or meaning of the claims be changed.

Thank You For Your Assistance **Certificates of Correction Branch**

The request for issuing the above-identified correction(s) is hereby:
Note your decision on the appropriate box.

☒ **Approved** **All** changes apply.

☐ **Approved in Part** Specify below which changes **do not** apply.

☐ **Denied** State the reasons for denial below.

Comments:

Drawings received on 11/16/2004 have been approved to enter.

SPE: Cheryl Tyler **Art Unit** 3744

UNITED STATES PATENT AND TRADEMARK OFFICE
CERTIFICATE OF CORRECTION

PATENT NO. : 6,931,885 B2

APPLICATION NO.: 10/712,170

ISSUE DATE : August 23, 2005

INVENTOR(S) : Andrew Citrynell, Kimberly Ann Miller, Joel Schwarze

It is certified that an error appears or errors appear in the above-identified patent and that said Letters Patent is hereby corrected as shown below:

Please replace the originally filed drawings with the attached replacement drawings.

OK to enter
7/20/06

MAILING ADDRESS OF SENDER (Please do not use customer number below):

TOWNSEND AND TOWNSEND AND CREW LLP
Two Embarcadero Center, Eighth Floor
San Francisco, CA 94111-3834

60605698 v1

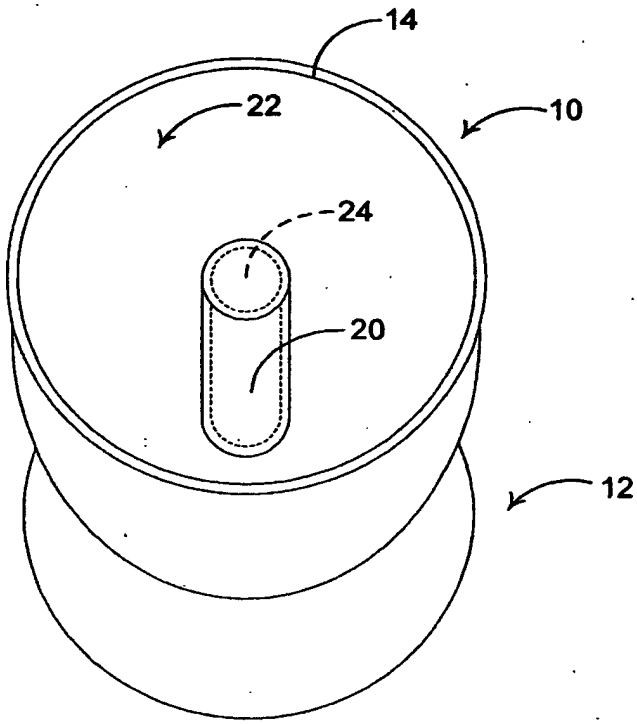

Fig.1

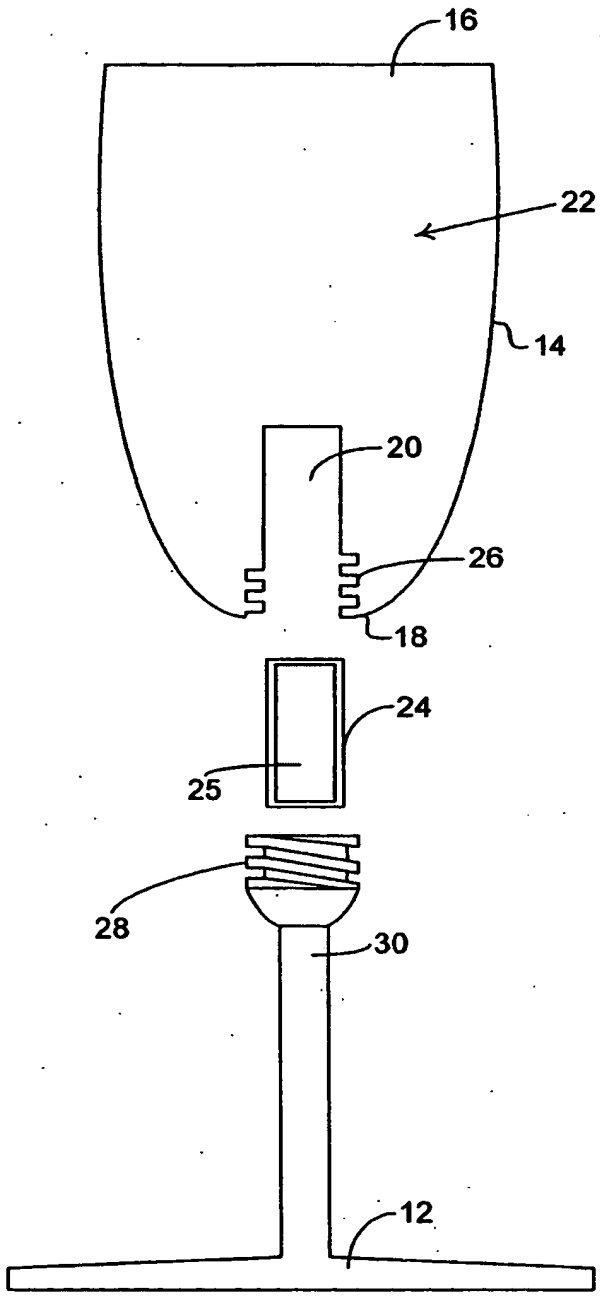

Fig.2

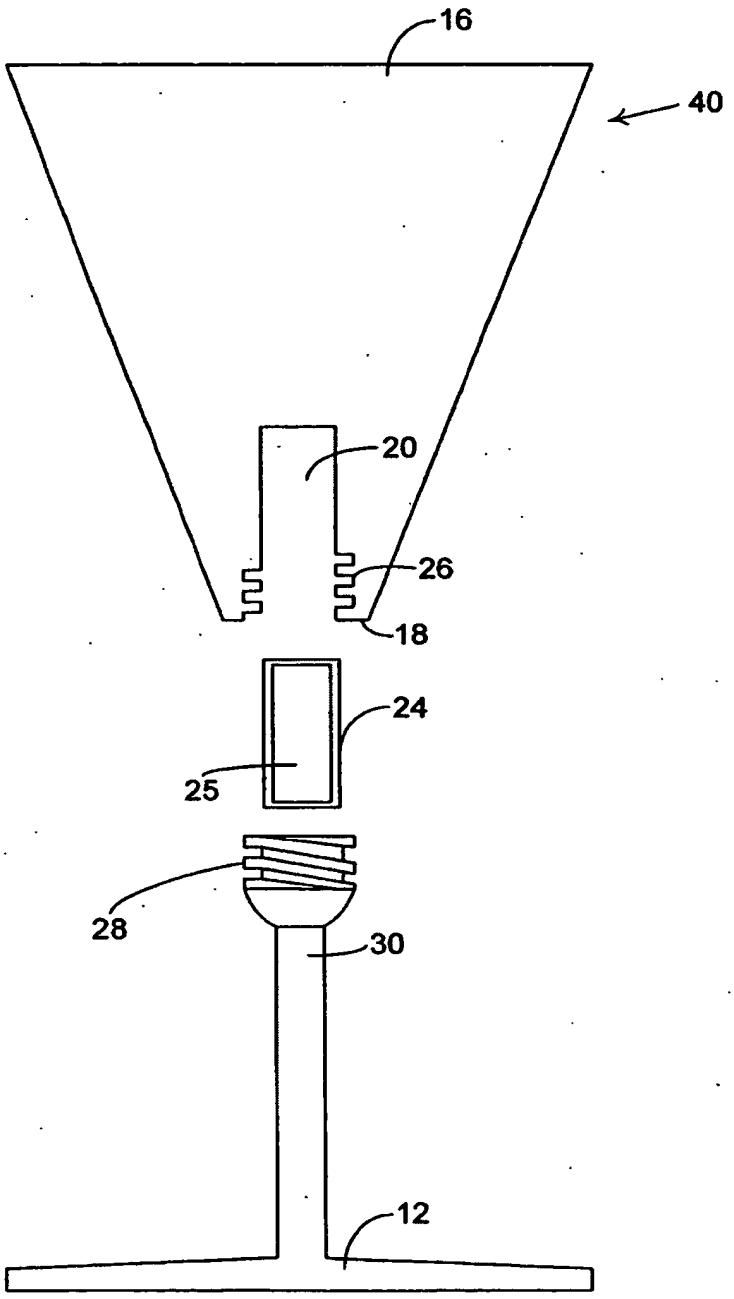

Fig.3

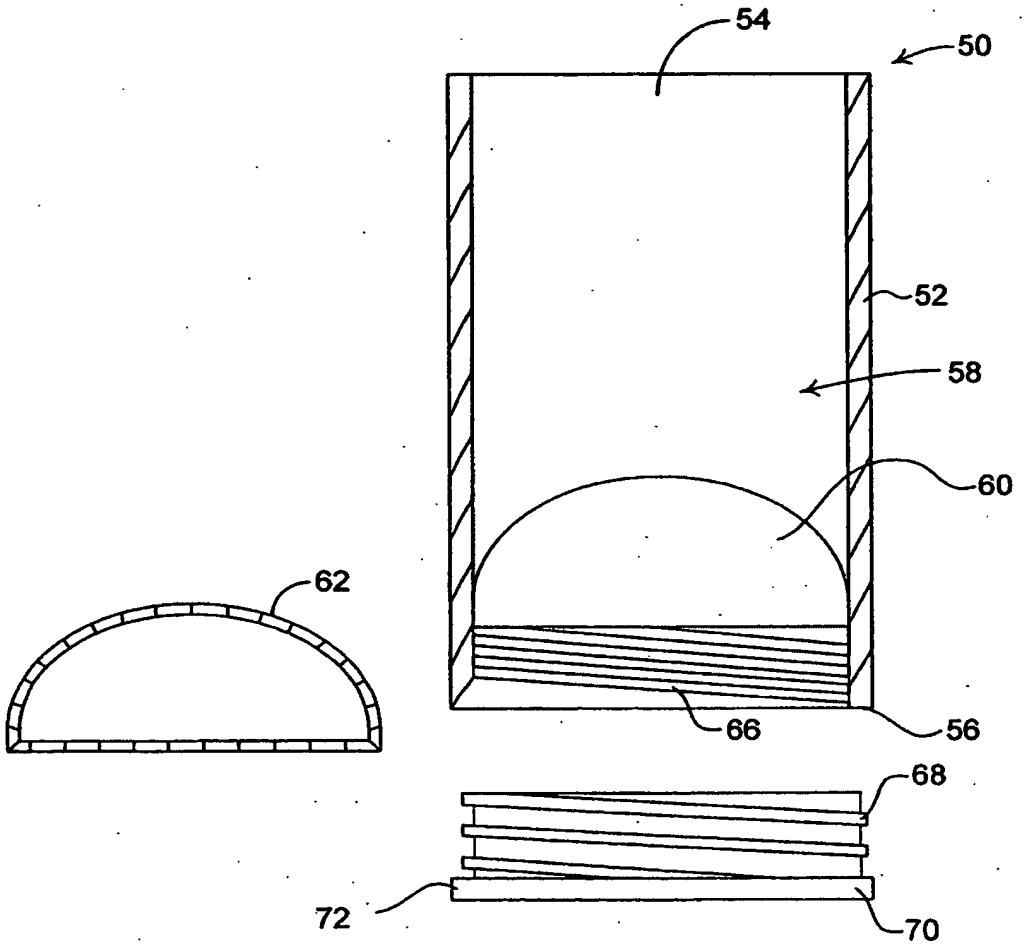

Fig.4 A

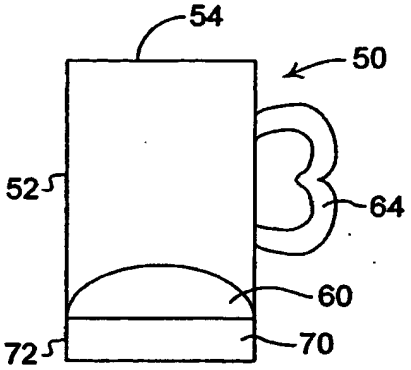

Fig.4

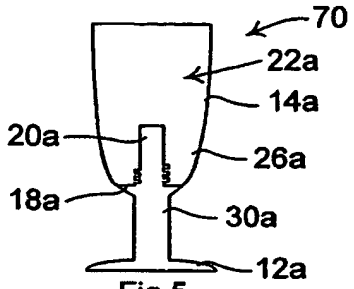

Fig.5

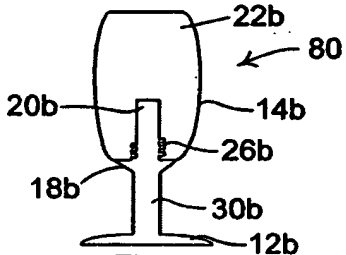

Fig.6

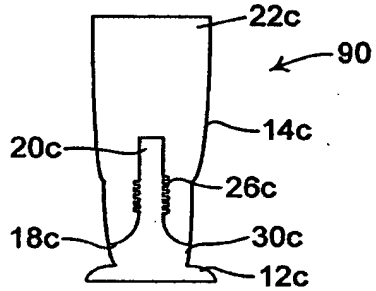

Fig.7

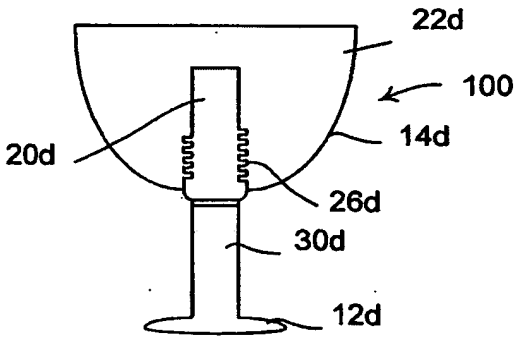

Fig.8

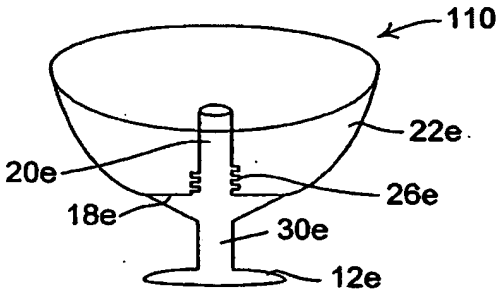

Fig.9

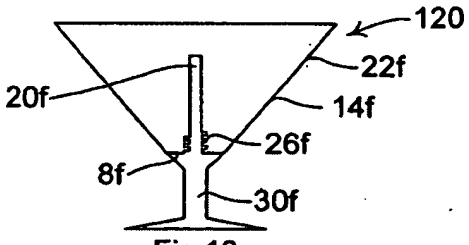

Fig.10

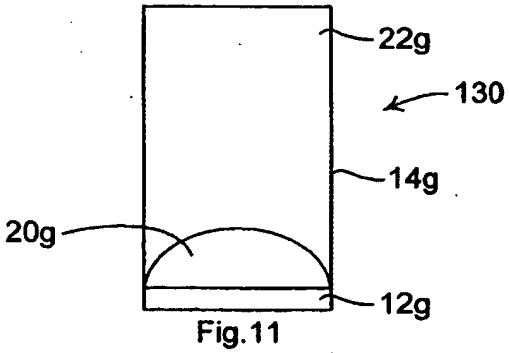

Fig.11

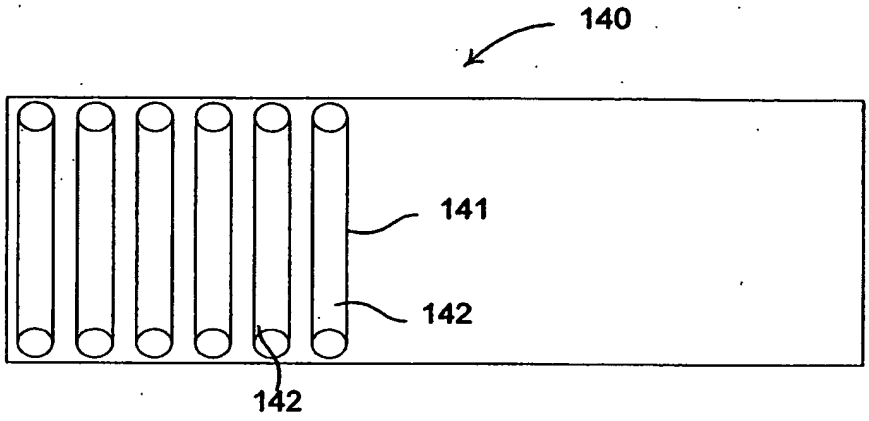

Fig.12

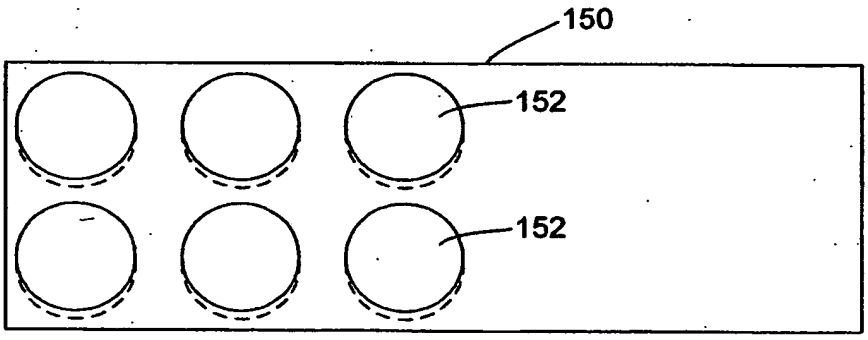

Fig.13

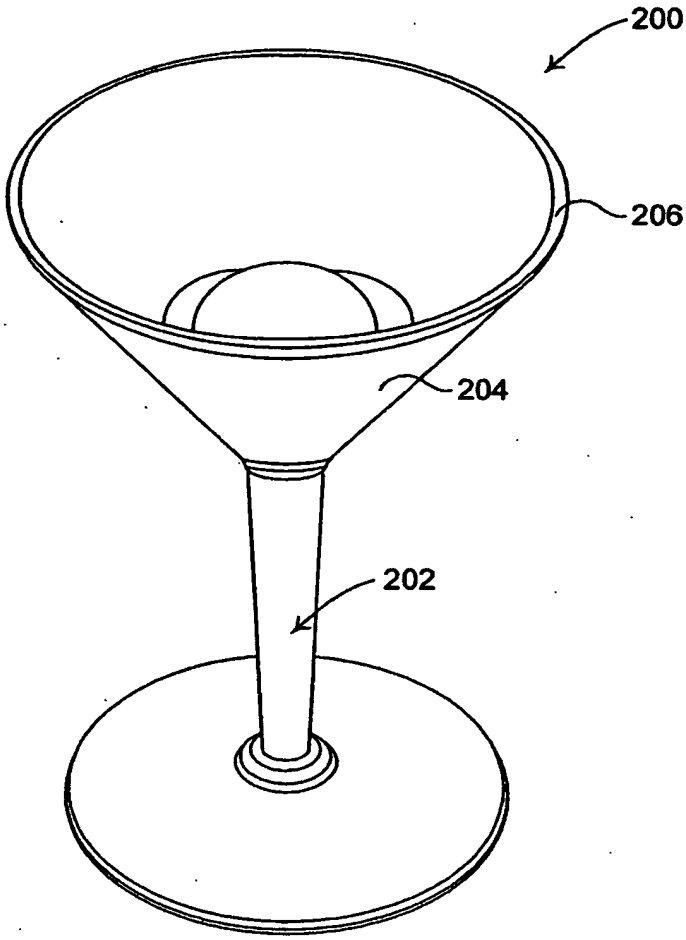

Fig.14

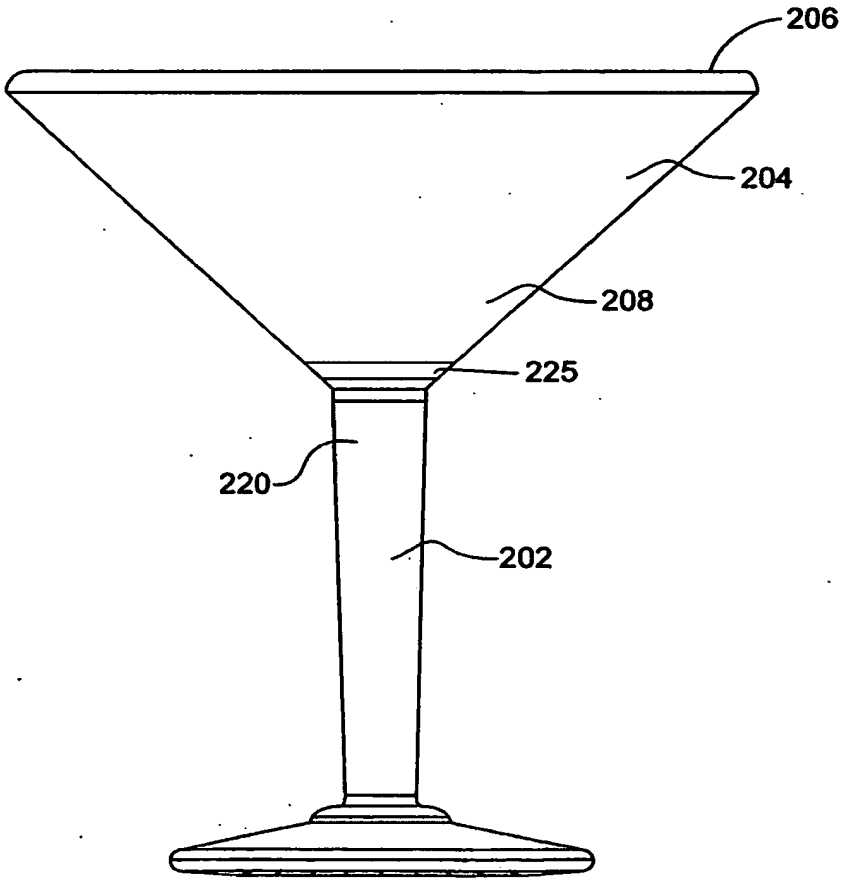

Fig.15

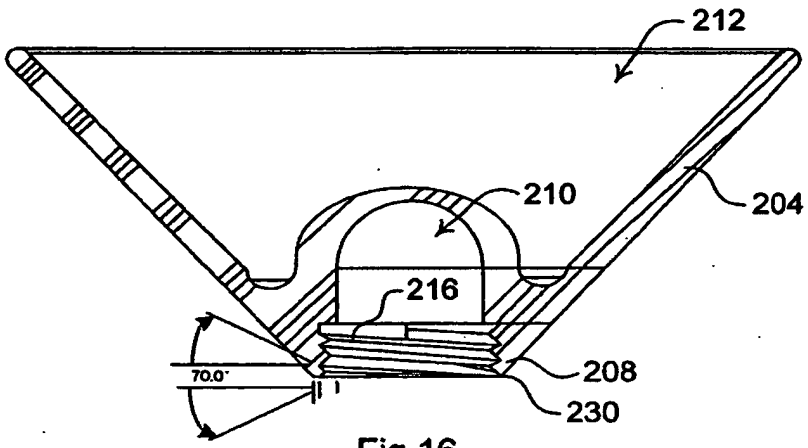

Fig.16

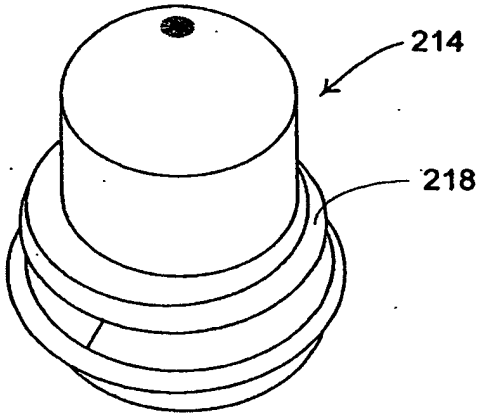

Fig.17

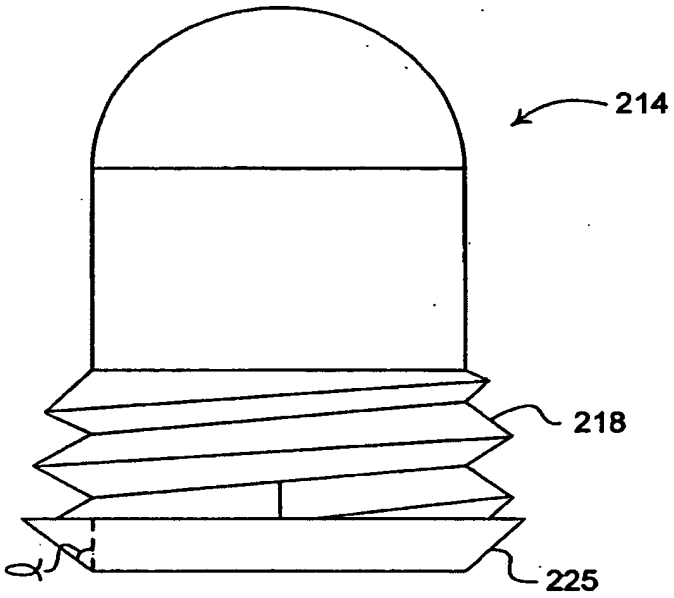

Fig.18

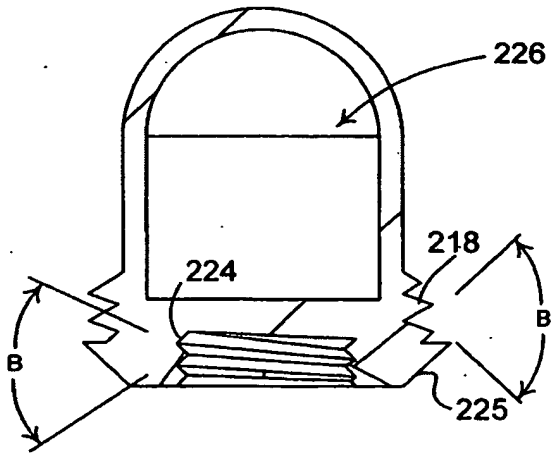

Fig.18A

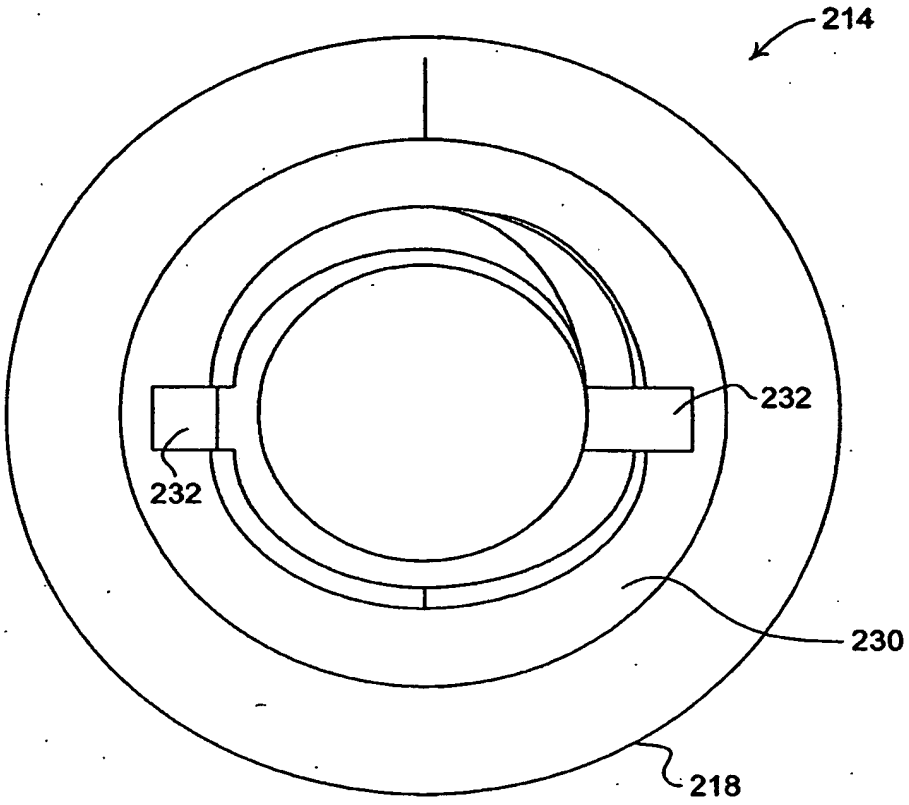

Fig.18B

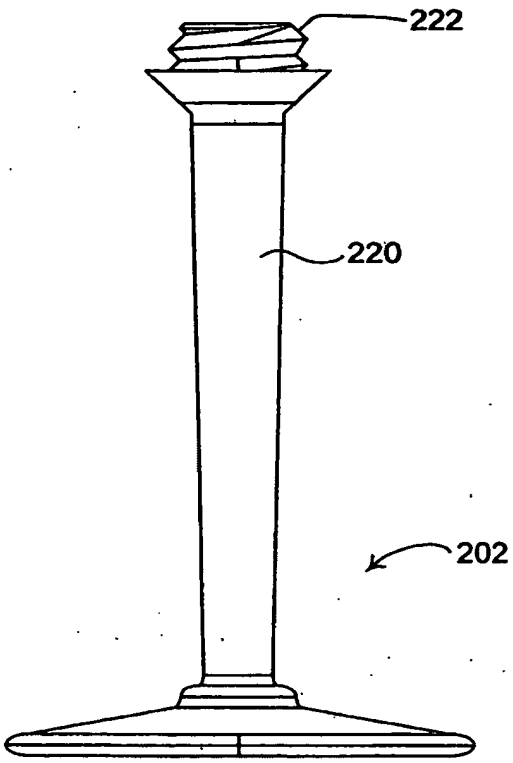

Fig.19

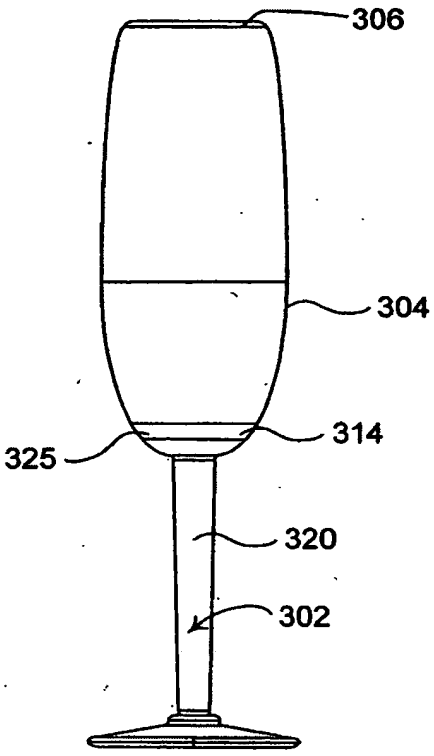

Fig.20

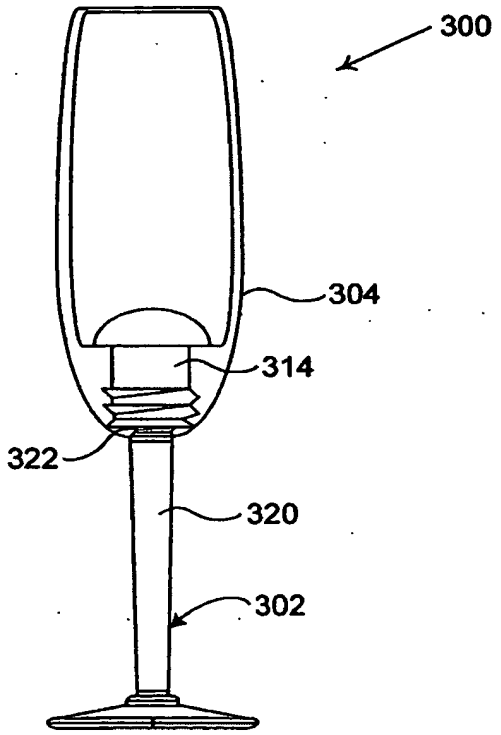

Fig.21

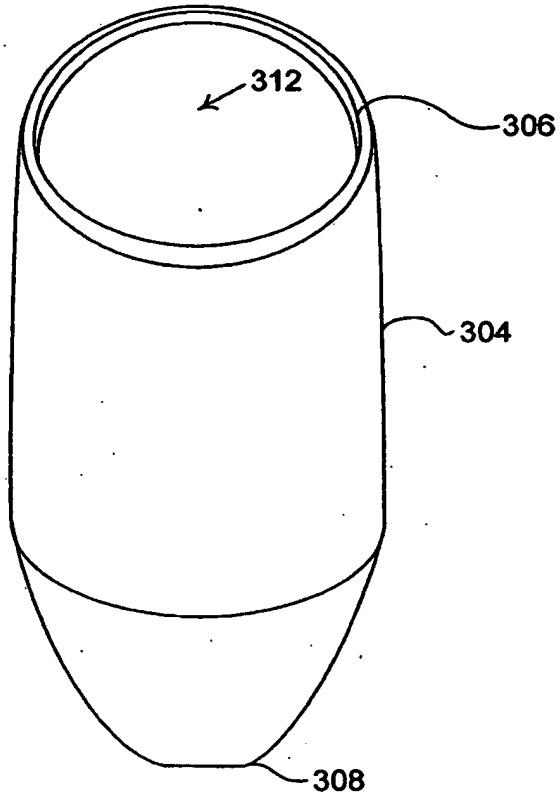

Fig.22

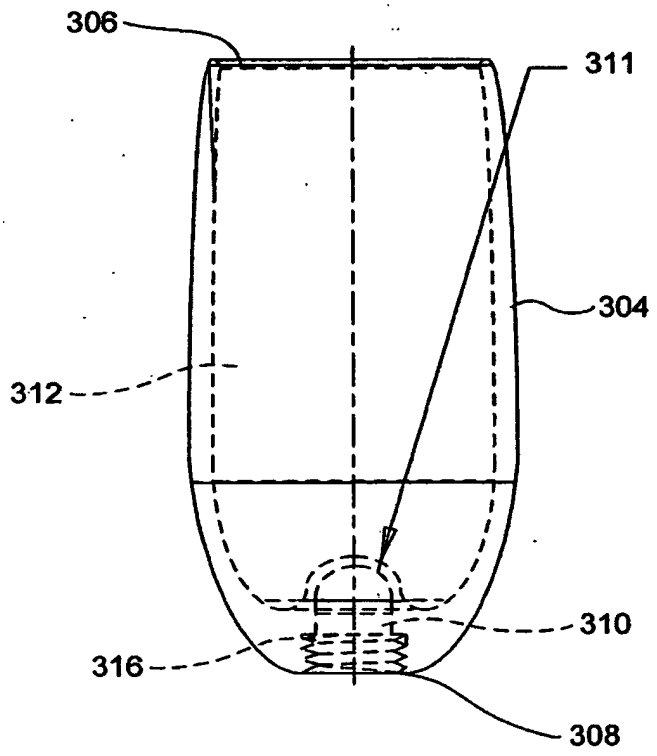

Fig.23

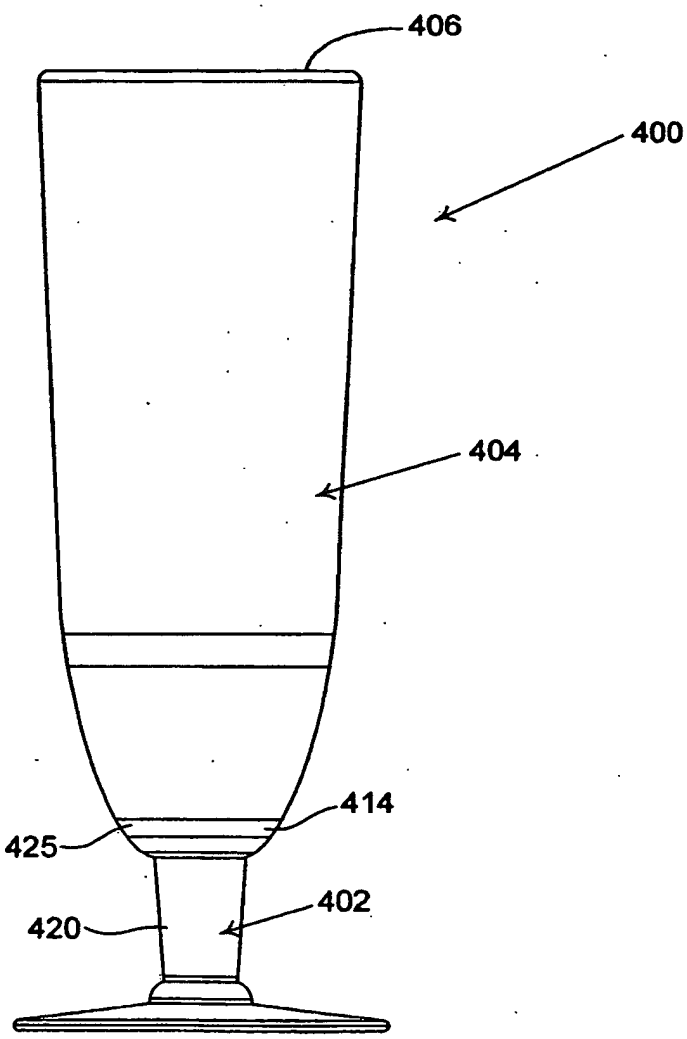

Fig.24

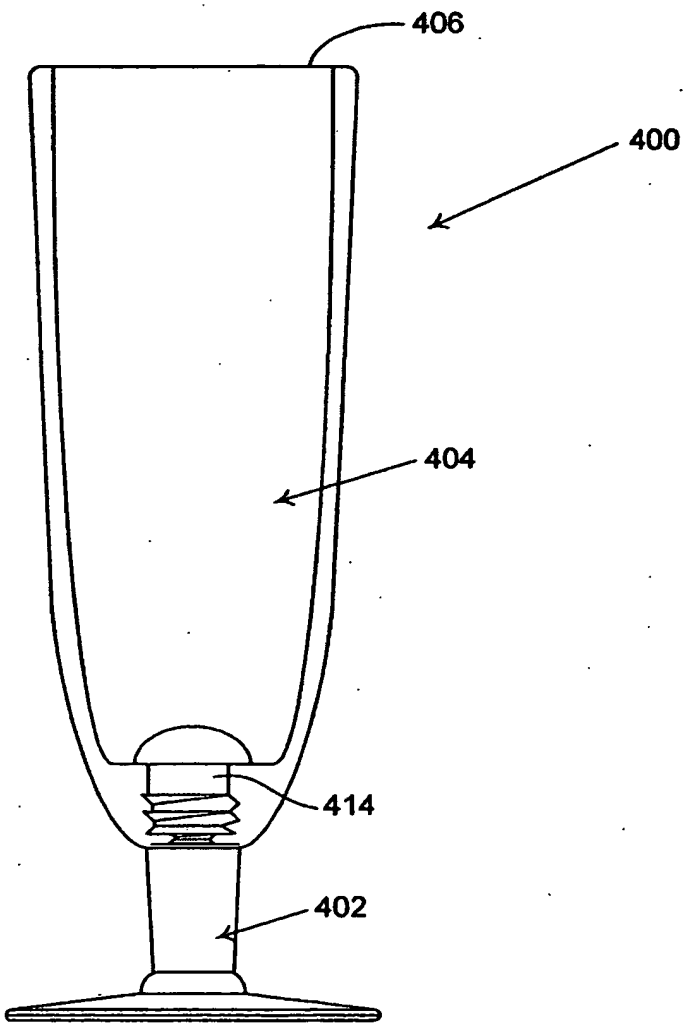

Fig.25

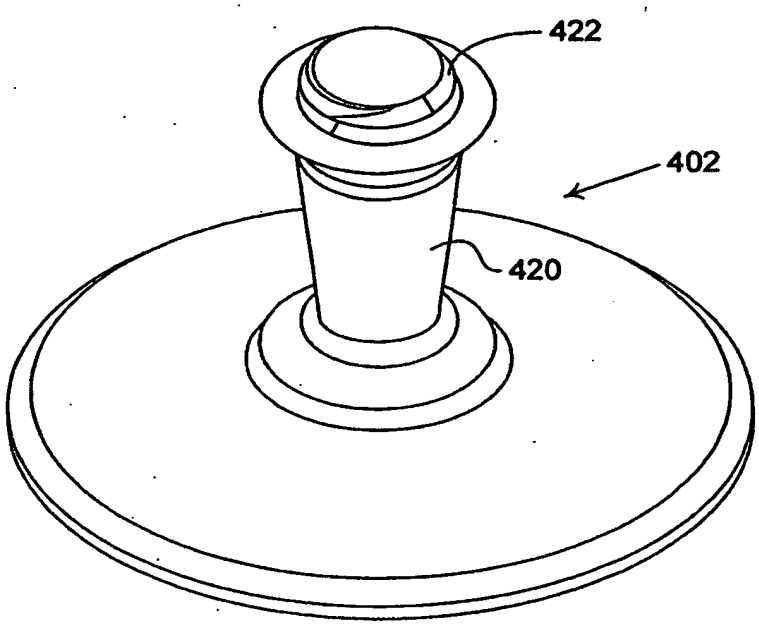

Fig.26

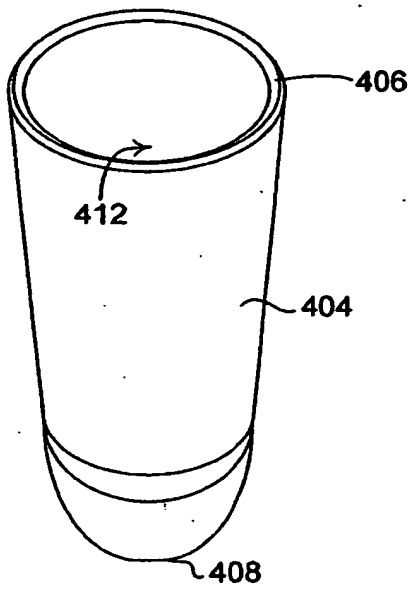

Fig.27

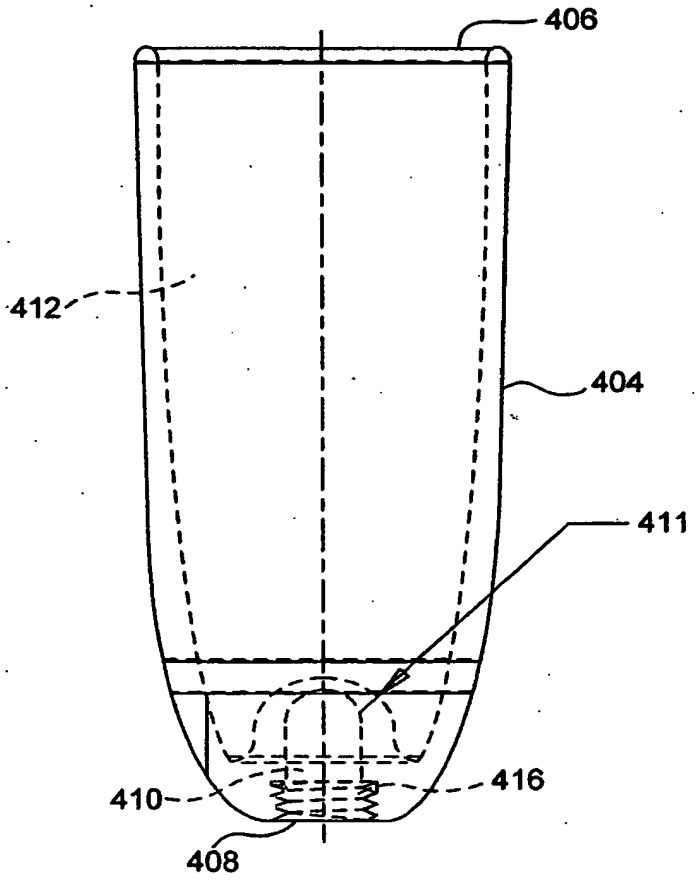

Fig.28

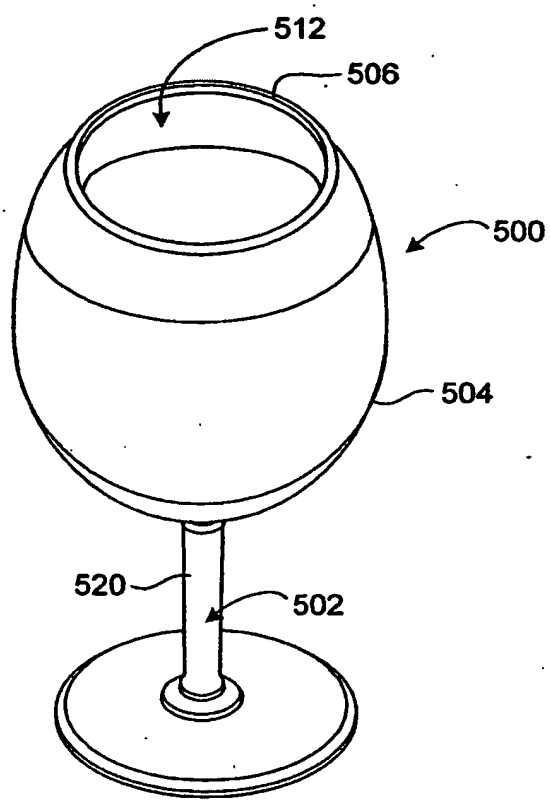

Fig.29

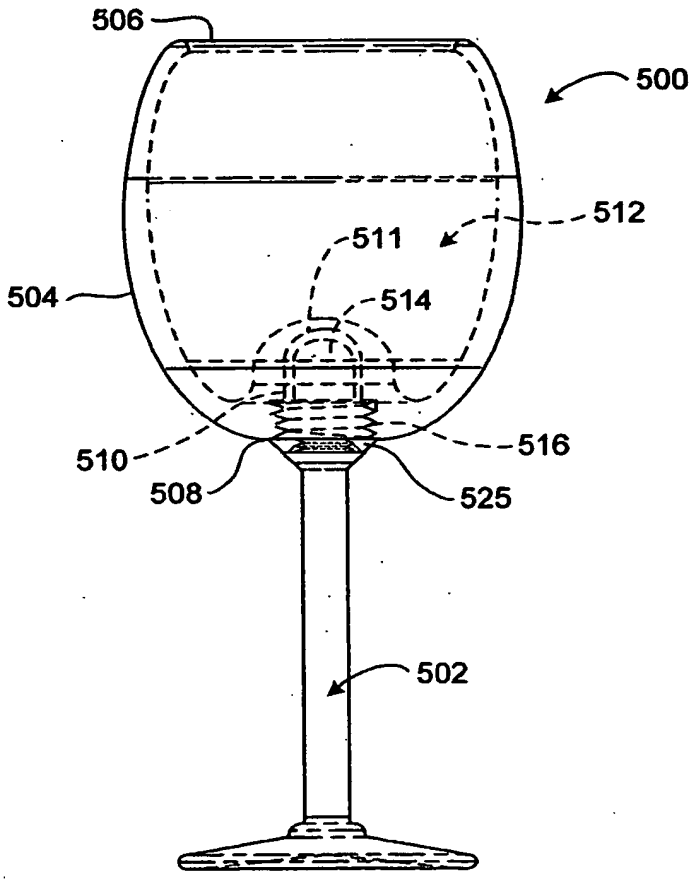

Fig.30

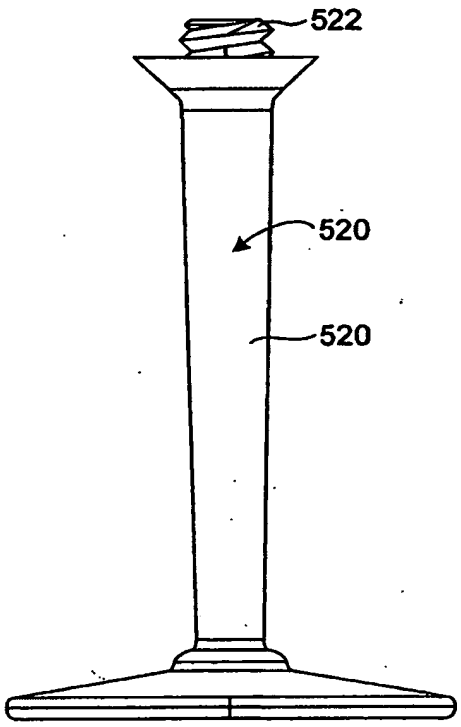

Fig.31

UNITED STATES PATENT AND TRADEMARK OFFICE

Commissioner for Patents
United States Patent and Trademark Office
P.O. Box 1450
Alexandria, VA 22313-1450
www.uspto.gov

JJGJR.: 07-06

Paper No: __

SCOTT M. GARRETT
MOTOROLA, INC.
LAW DEPARTMENT
8000 WEST SUNRISE BOULEVARD
FORT LAUDERDALE FL 33322

COPY MAILED

JUL 17 2006

OFFICE OF PETITIONS

In re Application of	:	
Freiha	:	
Application No. 10/712,174	:	DECISION
Filing Date: 13 November, 2003	:	
Attorney Docket No.: CE11431JLO	:	

This is a decision on the petition filed on 10 May, 2006, alleging unintentional delay under 37 C.F.R. §1.137(b).

For the reasons set forth below, the petition under 37 C.F.R.§1.137(b) is **GRANTED**.

BACKGROUND

The record reflects that:

- Petitioner failed to reply timely and properly to the non-final Office action mailed on1 March,·2005, with reply due absent extension of time on or before 1 June, 2005;
- the instant application went abandoned after midnight 1 June, 2005;
- the Office mailed a Notice of Abandonment7 September, 2005;

- on 10 May, 2006, Petitioner filed the instant petition (with fee), reply in the form of an amendment, and made the statement of unintentional delay.

Out of an abundance of caution, Petitioners always are reminded that:

- the practice of using the former one- (1-) year deadline following abandonment as an unpaid extension of time is an unacceptable practice and gives the appearance of intentional delay; and

- those registered to practice *and* all others who make representations before the Office are reminded to inquire into the underlying facts of representations made to the Office and support averments with the appropriate documentation–since all owe to the Office the continuing duty to disclose.[1]

---

[1] See supplement of 17 June, 1999. The Patent and Trademark Office is relying on petitioner's duty of candor and good faith and accepting a statement made by Petitioner. See Changes to Patent Practice and Procedure, 62 Fed. Reg. at 53160 and 53178, 1203 Off. Gaz. Pat. Office at 88 and 103 (responses to comments 64 and 109)(applicant obligated under 37 C.F.R. §10.18 to inquire into the underlying facts and circumstances when providing statements to the Patent and Trademark Office).

Specifically, the regulations at 37 C.F.R. §10.18 provide:

§ 10.18 Signature and certificate for correspondence filed in the Patent and Trademark Office.
(a) For all documents filed in the Office in patent, trademark, and other non-patent matters, except for correspondence that is required to be signed by the applicant or party, each piece of correspondence filed by a practitioner in the Patent and Trademark Office must bear a signature by such practitioner complying with the provisions of §1.4(d), §1.4(e), or § 2.193(c)(1) of this chapter.
(b) By presenting to the Office (whether by signing, filing, submitting, or later advocating) any paper, the party presenting such paper, whether a practitioner or non-practitioner, is certifying that—

(1) All statements made therein of the party's own knowledge are true, all statements made therein on information and belief are believed to be true, and all statements made therein are made with the knowledge that whoever, in any matter within the jurisdiction of the Patent and Trademark Office, knowingly and willfully falsifies, conceals, or covers up by any trick, scheme, or device a material fact, or makes any false, fictitious or fraudulent statements or representations, or makes or uses any false writing or document knowing the same to contain any false, fictitious or fraudulent statement or entry, shall be subject to the penalties set forth under 18 U.S.C. 1001, and that violations of this paragraph may jeopardize the validity of the application or document, or the validity or enforceability of any patent, trademark registration, or certificate resulting therefrom; and

(2) To the best of the party's knowledge, information and belief, formed after an inquiry reasonable under the circumstances, that —

(i) The paper is not being presented for any improper purpose, such as to harass someone or to cause unnecessary delay or needless increase in the cost of prosecution before the Office;

(ii) The claims and other legal contentions therein are warranted by existing law or by a nonfrivolous argument for the extension, modification, or reversal of existing law or the establishment of new law;

(iii) The allegations and other factual contentions have evidentiary support or, if specifically so identified, are likely to have evidentiary support after a reasonable opportunity for further investigation or discovery; and

(iv) The denials of factual contentions are warranted on the evidence, or if specifically so identified, are reasonably based on a lack of information or belief.

(c) Violations of paragraph (b)(1) of this section by a practitioner or non-practitioner may jeopardize the validity of the application or document, or the validity or enforceability of any patent, trademark registration, or certificate resulting therefrom. Violations of any of paragraphs (b)(2)(i) through (iv) of this section are, after notice and reasonable opportunity to respond, subject to such sanctions as deemed appropriate by the Commissioner, or the Commissioner's designee, which may include, but are not limited to, any combination of—

(1) Holding certain facts to have been established;
(2) Returning papers;
(3) Precluding a party from filing a paper, or presenting or contesting an issue;
(4) Imposing a monetary sanction;
(5) Requiring a terminal disclaimer for the period of the delay; or
(6) Terminating the proceedings in the Patent and Trademark Office.

(d) Any practitioner violating the provisions of this section may also be subject to disciplinary action. See § 10.23(c)(15).
[Added 50 FR 5175, Feb. 6, 1985, effective Mar. 8, 1985; para. (a) revised, 58 FR 54494, Oct. 22, 1993, effective Nov. 22, 1993; paras. (a) &

STATUTES, REGULATIONS AND ANALYSIS

Congress has authorized the Commissioner to "revive an application if the delay is shown to the satisfaction of the Commissioner to have been "unavoidable." 35 U.S.C. §133 (1994).[2]

The regulations at 37 C.F.R. §1.137(a) and (b) set forth the requirements for a petitioner to revive a previously unavoidably or unintentionally, respectively, abandoned application under this congressional grant of authority. The language of 35 U.S.C. §133 and 37 C.F.R. §1.137(a) is clear, unambiguous, and without qualification: the delay in tendering the reply to the outstanding Office action, as well as filing the first petition seeking revival, must have been unavoidable for the reply now to be accepted on petition.[3]

Delays in responding properly raise the question whether delays are unavoidable.[4] Where there is a question whether the delay was unavoidable, Petitioners must meet the burden of establishing that the delay was unavoidable within the meaning of 35 U.S.C. §133 and 37 C.F.R. §1.137(a).[5] And the Petitioner must be diligent in attending to the matter.[6] Failure to do so does not constitute the care required under Pratt,[7] and so cannot satisfy the test for diligence and due care.

(By contrast, unintentional delays are those that do not satisfy the very strict statutory and regulatory requirements of unavoidable delay, and also, by definition, are not intentional.[8]))

(b) revised, paras. (c) & (d) added, 62 FR 53131, Oct. 10, 1997, effective Dec. 1, 1997; para. (a) revised, 69 FR 56481, Sept. 21, 2004, effective Oct. 21, 2004]

[2] 35 U.S.C. §133 provides:
35 U.S.C. §133 Time for prosecuting application.
Upon failure of the applicant to prosecute the application within six months after any action therein, of which notice has been given or mailed to the applicant, or within such shorter time, not less than thirty days, as fixed by the Commissioner in such action, the application shall be regarded as abandoned by the parties thereto, unless it be shown to the satisfaction of the Commissioner that such delay was unavoidable.

[3] Therefore, by example, an unavoidable delay in the payment of the Filing Fee might occur if a reply is shipped by the US Postal Service, but due to catastrophic accident, the delivery is not made.

[4] See: *Changes to Patent Practice and Procedure*; *Final Rule Notice*, 62 *Fed. Reg.* at 53158-59 (October 10, 1997), 1203 *Off. Gaz. Pat. Office* at 86-87 (October 21, 1997).

[5] See: In re Application of G, 11 USPQ2d 1378, 1380 (Comm'r Pats. 1989).

[6] See: Diligence in Filing Petitions to Revive and Petitions to Withdraw the Holding of Abandonment, 1124 Off. Gaz. Pat. Office 33 (March 19, 1991). It was and is Petitioner's burden to exercise diligence in seeking either to have the holding of abandonment withdrawn or the application revived. See 1124 Off. Gaz. Pat. Office supra.

[7] The test of diligence in the prosecution of an application before the Commissioner is, in the context of ordinary human affairs, the test is such care as is generally used and observed by prudent and careful persons in relation to their most important business. Ex parte Pratt, 1887 Dec. Comm'r Pat. 31 (Comm'r Pat. 1887); Ex parte Henrich, 1913 Dec. Comm'r Pat. 139, 141 (Comm'r. Pat. 1913).

[8] Therefore, by example, an unintentional delay in the reply might occur if the reply and transmittal form are to be prepared for shipment by the US Postal Service, but other pressing matters distract one's attention and the mail is not timely deposited for shipment.

As to the Allegation
of Unintentional Delay

The requirements for a grantable petition under 37 C.F.R. §1.137(b) are the petition and fee, a statement/showing of unintentional delay, a proper reply, and–where appropriate--a terminal disclaimer and fee.

The record (including the petition filed on 10 May, 2006) does not necessitate a finding that the delay between midnight 1 June, 2005 (date of abandonment), and 10 May, 2006 (date of filing of grantable petition), was not unintentional.

Rather, the Patent and Trademark Office is relying in this matter on the duty of candor and good faith of Petitioner Freiha and Counsel Scott M. Garrett (Reg. No. 39,988) when accepting Petitioners' representation that the delay in filing the response was unintentional.[9]

It appears that Petitioner has satisfied the requirements of the regulation.

CONCLUSION

The petition under 37 C.F.R. §1.137(b) hereby is **granted**.

The instant application is released to Technology Center 2600 for further processing in due course.

Telephone inquiries concerning this decision may be directed to the undersigned at (571) 272-3214.

John J. Gillon, Jr.
Senior Attorney
Office of Petitions

[9] See Changes to Patent Practice and Procedure, 62 Fed. Reg. at 53160 and 53178, 1203 Off. Gaz. Pat. Office at 88 and 103 (responses to comments 64 and 109)(applicant obligated under 37 C.F.R. §10.18 to inquire into the underlying facts and circumstances when providing the statement required by 37 C.F.R. §1.137(b) to the Patent and Trademark Office).

UNITED STATES PATENT AND TRADEMARK OFFICE

Commissioner for Patents
United States Patent and Trademark Office
P.O. Box 1450
Alexandria, VA 22313-1450
www.uspto.gov

BARCELO & HARRISON, LLP
22091 WOOD ISLAND LANE
HUNTINGTON BEACH, CA 92646

COPY MAILED

FEB 29 2008

OFFICE OF PETITIONS

In re Application of :
Damon Douglas Brink, et. al. :
Application No. 10/712,187 : ON PETITION
Filed: November 12, 2003 :
Attorney Docket No. 157972-0005 :

This is a decision on the petition under 37 CFR 1.137(b), filed on March 1, 2007, to revive the above-identified application.

The application became abandoned for failure to respond to the non-final Office action mailed June 9, 2006. A Notice of Abandonment was mailed on January 30, 2007.

The petition satisfies the requirements of 37 CFR 1.137(b), in that, petitioner has supplied (1) the reply in the form of an amendment; (2) the petition fee of $750; and (3) a proper statement of unintentional delay. Therefore, the petition is **GRANTED.**

This application file is being referred to Technology Center Art Unit 2627, for review of the amendment filed with the instant petition.

Telephone inquiries concerning this decision should be directed to the undersigned at (571) 272-3226.

Andrea Smith
Petitions Examiner
Office of Petitions

UNITED STATES PATENT AND TRADEMARK OFFICE

UNITED STATES DEPARTMENT OF COMMERCE
United States Patent and Trademark Office
Address: COMMISSIONER FOR PATENTS
P.O. Box 1450
Alexandria, Virginia 22313-1450
www.uspto.gov

APPL NO.	FILING OR 371 (c) DATE	ART UNIT	FIL FEE REC'D	ATTY.DOCKET NO	DRAWINGS	TOT CLMS	IND CLMS
10/712,189	11/13/2003	1752	770	225101		9	1

CONFIRMATION NO. 7871

CORRECTED FILING RECEIPT

OC000000012317341

23460
LEYDIG VOIT & MAYER, LTD
TWO PRUDENTIAL PLAZA, SUITE 4900
180 NORTH STETSON AVENUE
CHICAGO, IL 60601-6780

Date Mailed: 04/08/2004

Receipt is acknowledged of this regular Patent Application. It will be considered in its order and you will be notified as to the results of the examination. Be sure to provide the U.S. APPLICATION NUMBER, FILING DATE, NAME OF APPLICANT, and TITLE OF INVENTION when inquiring about this application. Fees transmitted by check or draft are subject to collection. Please verify the accuracy of the data presented on this receipt. **If an error is noted on this Filing Receipt, please write to the Office of Initial Patent Examination's Filing Receipt Corrections, facsimile number 703-746-9195. Please provide a copy of this Filing Receipt with the changes noted thereon. If you received a "Notice to File Missing Parts" for this application, please submit any corrections to this Filing Receipt with your reply to the Notice. When the USPTO processes the reply to the Notice, the USPTO will generate another Filing Receipt incorporating the requested corrections (if appropriate).**

Applicant(s)

Ingrid Geuens, Emblem, BELGIUM;
Carlo Uyttendaele, Mortsel, BELGIUM;
Ivan Hoogmartens, Wilrijk, BELGIUM;
Johan Loccufier, Zwijnaarde, BELGIUM;

Assignment For Published Patent Application

AGFA-GEVAERT, Mortsel, BELGIUM;

Domestic Priority data as claimed by applicant

This appln claims benefit of 60/429,284 11/26/2002

Foreign Applications

EUROPEAN PATENT OFFICE (EPO) 02102586.1 11/14/2002

If Required, Foreign Filing License Granted: 02/09/2004

Projected Publication Date: 05/20/2004

Non-Publication Request: No

Early Publication Request: No

Title

Stabilizers for use in substantially light-insensitive thermographic recording materials

Preliminary Class

430

LICENSE FOR FOREIGN FILING UNDER
Title 35, United States Code, Section 184
Title 37, Code of Federal Regulations, 5.11 & 5.15

GRANTED

The applicant has been granted a license under 35 U.S.C. 184, if the phrase "IF REQUIRED, FOREIGN FILING LICENSE GRANTED" followed by a date appears on this form. Such licenses are issued in all applications where the conditions for issuance of a license have been met, regardless of whether or not a license may be required as set forth in 37 CFR 5.15. The scope and limitations of this license are set forth in 37 CFR 5.15(a) unless an earlier license has been issued under 37 CFR 5.15(b). The license is subject to revocation upon written notification. The date indicated is the effective date of the license, unless an earlier license of similar scope has been granted under 37 CFR 5.13 or 5.14.

This license is to be retained by the licensee and may be used at any time on or after the effective date thereof unless it is revoked. This license is automatically transferred to any related applications(s) filed under 37 CFR 1.53(d). This license is not retroactive.

The grant of a license does not in any way lessen the responsibility of a licensee for the security of the subject matter as imposed by any Government contract or the provisions of existing laws relating to espionage and the national security or the export of technical data. Licensees should apprise themselves of current regulations especially with respect to certain countries, of other agencies, particularly the Office of Defense Trade Controls, Department of State (with respect to Arms, Munitions and Implements of War (22 CFR 121-128)); the Office of Export Administration, Department of Commerce (15 CFR 370.10 (j)); the Office of Foreign Assets Control, Department of Treasury (31 CFR Parts 500+) and the Department of Energy.

NOT GRANTED

No license under 35 U.S.C. 184 has been granted at this time, if the phrase "IF REQUIRED, FOREIGN FILING LICENSE GRANTED" DOES NOT appear on this form. Applicant may still petition for a license under 37 CFR 5.12, if a license is desired before the expiration of 6 months from the filing date of the application. If 6 months has lapsed from the filing date of this application and the licensee has not received any indication of a secrecy order under 35 U.S.C. 181, the licensee may foreign file the application pursuant to 37 CFR 5.15(b).

UNITED STATES PATENT AND TRADEMARK OFFICE

Commissioner for Patents
United States Patent and Trademark Office
P.O. Box 1450
Alexandria, VA 22313-1450
www.uspto.gov

LEWIS AND ROCA LLP
1663 HWY 395, SUITE 201
MINDEN NV 89423

COPY MAILED

APR 30 2009

OFFICE OF PETITIONS

In re Patent No. 7269847
Issue Date: 09/11/2007
Application No. 10/712190
Filed: 11/12/2003
Attorney Docket No. GRAPH-003COE

: DECISION DISMISSING PETITION
: UNDER 37 CFR 1.78(a)(3) AND
: REQUEST FOR CERTIFICATE OF
: CORRECTION
:

This is a decision on the petition, filed on October 17, 2008, which is being treated as a petition under 37 CFR 1.78(a)(3), seeking to add a claim for priority under 35 U.S.C. § 120 to nonprovisional Application No. 09/552,476, filed on April 18, 2000, by way of a certificate of correction.

The petition is **DISMISSED**.

A review of the file record fails to disclose that a claim for the benefit of priority to the above-noted, prior-filed nonprovisional application was made within the time period set forth in 37 CFR 1.78(a)(2)(ii) and further failed to include a proper reference to the prior-filed application as required by 37 CFR 1.78(a)(2)(i) and 1.78(a)(2)(iii).

The instant application was filed November 12, 2003. Therefore, since this application was filed after November 29, 2000, a petition under 37 CFR 1.78(a)(3), along with submission of a Certificate of Correction, is the appropriate avenue of relief to accept a late claim for the benefit of priority to a prior-filed nonprovisional application after issuance of the application into a patent. *See* MPEP 1481.

A petition for acceptance of a claim for late priority under 37 CFR 1.78(a)(3) must be accompanied by:

(1) the reference required by 35 U.S.C. § 120 and 37 CFR 1.78(a)(2)(i) of the prior-filed application, unless previously submitted;
(2) the surcharge set forth in § 1.17(t); and

(3) a statement that the entire delay between the date the claim was due under 37 CFR 1.78(a)(2)(ii) and the date the claim was filed was unintentional. The Director may require additional information where there is a question whether the delay was unintentional.

The petition must be dismissed because the reference required by 35 U.S.C. § 120 and 37 CFR 1.78(a)(2)(i) has not be properly supplied. A Certificate of Correction is not a proper reference. Pursuant to 37 CFR 1.78(a)(2)(iii) the reference required by this paragraph must be included in an application data sheet (§ 1.76), or the specification must contain or be amended to contain such reference in the first sentence(s) following the title.

More to this point, the request to amend the priority data contained on the first and second pages of the petition is not a proper amendment as drafted and, therefore, is not considered a proper reference under 37 CFR 1.78(a)(5)(i). In this regard, the amendment is physically part of the petition and, as such, does not comply with 37 CFR 1.121, 1.52, or 1.4(c). Note that 37 CFR 1.121 states that amendments are made by filing a paper, in compliance with § 1.52, directing that specified amendments be made. The pertinent section of 37 CFR 1.52 states that the claim (in this case, the claim for priority), must commence on a separate physical sheet. 37 CFR 1.4(c) states that each distinct subject must be contained in a separate paper since different matters may be considered by different branches of the United States Patent and Trademark Office.

Before the petition under 37 CFR § 1.78(a)(3) can be granted, a renewed petition and either an supplemental Application Data Sheet or an amendment (complying with the provisions of 37 CFR 1.121 and 37 CFR 1.76(b)(5)) to correct the above matters are required.

Receipt of the petition fee and certificate of correction fee is acknowledged. No further fees are due in connection with this petition.

Further correspondence with respect to this matter should be addressed as follows:

By mail:
Mail Stop PETITIONS
Commissioner for Patents
Post Office Box 1450
Alexandria, VA 22313-1450

By hand:
Customer Service Window
Mail Stop Petitions
Randolph Building
401 Dulany Street
Alexandria, VA 22314

By fax:
(571) 273-8300
ATTN: Office of Petitions

Any questions concerning this matter may be directed to Senior Petitions Attorney Douglas I. Wood at (571) 272-3231.

Anthony Knight
Supervisor
Office of Petitions

UNITED STATES PATENT AND TRADEMARK OFFICE

Commissioner for Patents
United States Patent and Trademark Office
P.O. Box 1450
Alexandria, VA 22313-1450
www.uspto.gov

COPY MAILED

JUL 31 2009

OFFICE OF PETITIONS

LEWIS AND ROCA LLP
1663 HWY 395, SUITE 201
MINDEN NV 89423

In re Patent No. 7269847
Issue Date: 09/11/2007
Application No. 10/712190
Filed: 11/12/2003
Attorney Docket No. GRAPH-003COE

: DECISION GRANTING PETITION
: UNDER 37 CFR 1.78(a)(3) AND
: REQUEST FOR CERTIFICATE OF
: CORRECTION
:

This is a decision on the petition, filed May 7, 2009, which is being treated as a petition under 37 CFR 1.78(a)(3), seeking to add a claim for priority under 35 U.S.C. § 120 to nonprovisional Application No. 09/552,476, filed April 18, 2000, by way of a certificate of correction.

The petition is **GRANTED**.

A review of the file record fails to disclose that a claim for the benefit of priority to the above-noted, prior-filed nonprovisional application was made within the time period set forth in 37 CFR 1.78(a)(2)(ii) and further failed to include a proper reference to the prior-filed application as required by 37 CFR 1.78(a)(2)(i) and 1.78(a)(2)(iii).

The instant application was filed November 12, 2003. Therefore, since this application was filed after November 29, 2000, a petition under 37 CFR 1.78(a)(3), along with submission of a Certificate of Correction, is the appropriate avenue of relief to accept a late claim for the benefit of priority to a prior-filed nonprovisional application after issuance of the application into a patent. *See* MPEP 1481.

A petition for acceptance of a claim for late priority under 37 CFR 1.78(a)(3) must be accompanied by:

(1) the reference required by 35 U.S.C. § 120 and 37 CFR 1.78(a)(2)(i) of the prior-filed application, unless previously submitted;
(2) the surcharge set forth in § 1.17(t); and
(3) a statement that the entire delay between the date the claim was due under 37 CFR 1.78(a)(2)(ii) and the date the claim was filed was unintentional. The Director may require additional information where there is a question whether the delay was unintentional.

As the petition for acceptance of an unintentionally delayed claim for the benefit of priority under 35 U.S.C. § 120 to the above-noted, prior-filed nonprovisional application satisfies the conditions of 37 CFR 1.78(a)(3), the petition is granted.

The rule at 37 CFR § 1.78(a)(3) requires a statement that the entire delay between the date the claim was due under 37 CFR § 1.78(a)(2)(ii) and the date the claim was filed was unintentional. Since the statement appearing in the petition varies from the required language, the statement is being construed as the statement required by 37 CFR §1.78(a)(3). If this is not a correct reading of the statement appearing in the petition, petitioner should promptly notify the Office.

Petitioner is advised that the granting of this petition and the mailing of a corrected Filing Receipt should not be viewed as an indication that a determination has been made that this application is entitled to claim benefit of the prior-filed application. A determination that applicant is entitled to claim benefit of the prior-filed application will be made by the Examiner prior to the mailing of a certificate of correction.

The $1,410 surcharge fee, as well as the $100 certificate of correction fee, have been received.

A corrected Filing Receipt, which includes the priority claim to the prior-filed nonprovisional application, accompanies this decision on petition.

Any inquiries concerning this decision may be directed to Senior Petitions Attorney Douglas I. Wood at (571) 272-3231.

This application is being referred to the Certificates of Correction Branch for processing the request for a certificate of correction in accordance with this decision on the petition under 37 CFR 1.78(a)(3).

Anthony Knight
Supervisor
Office of Petitions

ATTACHMENT: Corrected Filing Receipt

UNITED STATES PATENT AND TRADEMARK OFFICE

UNITED STATES DEPARTMENT OF COMMERCE
United States Patent and Trademark Office
Address: COMMISSIONER FOR PATENTS
P.O. Box 1450
Alexandria, Virginia 22313-1450
www.uspto.gov

APPLICATION NUMBER	FILING or 371(c) DATE	GRP ART UNIT	FIL FEE REC'D	ATTY.DOCKET.NO	TOT CLAIMS	IND CLAIMS
10/712,190	11/12/2003	2131	685	GRAPH-003COE	5	1

CONFIRMATION NO. 8294

CORRECTED FILING RECEIPT

28661
LEWIS AND ROCA LLP
1663 Hwy 395, Suite 201
Minden, NV 89423

Date Mailed: 07/31/2009

Receipt is acknowledged of this non-provisional patent application. The application will be taken up for examination in due course. Applicant will be notified as to the results of the examination. Any correspondence concerning the application must include the following identification information: the U.S. APPLICATION NUMBER, FILING DATE, NAME OF APPLICANT, and TITLE OF INVENTION. Fees transmitted by check or draft are subject to collection. Please verify the accuracy of the data presented on this receipt. **If an error is noted on this Filing Receipt, please submit a written request for a Filing Receipt Correction. Please provide a copy of this Filing Receipt with the changes noted thereon. If you received a "Notice to File Missing Parts" for this application, please submit any corrections to this Filing Receipt with your reply to the Notice. When the USPTO processes the reply to the Notice, the USPTO will generate another Filing Receipt incorporating the requested corrections**

Applicant(s)

Ralph E. Wesinger JR., San Jose, CA;
Christopher D. Coley, Morgan Hill, CA;

Power of Attorney:

Peter Smolka--15913	Ronald Grudziecki--24970
Robert Swecker--19885	Norman Zivin--25385
Benton Duffett Jr--22030	Troy Dillahunty--25423
Platon Mandros--22124	Alan Kopecki--25813
Norman Stepno--22716	William Benz--25952

Domestic Priority data as claimed by applicant

This application is a CON of 10/210,326 08/01/2002 PAT 6,751,738
which is a CON of 09/552,476 04/18/2000 PAT 6,804,783
which is a CON of 09/299,941 04/26/1999 PAT 6,052,788
which is a CON of 08/733,361 10/17/1996 PAT 5,898,830

Foreign Applications

If Required, Foreign Filing License Granted: 01/07/2004
The country code and number of your priority application, to be used for filing abroad under the Paris Convention, is **US 10/712,190**
Projected Publication Date: Not Applicable
Non-Publication Request: No
Early Publication Request: No
**** SMALL ENTITY ****

Title

FIREWALL PROVIDING ENHANCED NETWORK SECURITY AND USER TRANSPARENCY

Preliminary Class

726

PROTECTING YOUR INVENTION OUTSIDE THE UNITED STATES

Since the rights granted by a U.S. patent extend only throughout the territory of the United States and have no effect in a foreign country, an inventor who wishes patent protection in another country must apply for a patent in a specific country or in regional patent offices. Applicants may wish to consider the filing of an international application under the Patent Cooperation Treaty (PCT). An international (PCT) application generally has the same effect as a regular national patent application in each PCT-member country. The PCT process **simplifies** the filing of patent applications on the same invention in member countries, but **does not result** in a grant of "an international patent" and does not eliminate the need of applicants to file additional documents and fees in countries where patent protection is desired.

Almost every country has its own patent law, and a person desiring a patent in a particular country must make an application for patent in that country in accordance with its particular laws. Since the laws of many countries differ in various respects from the patent law of the United States, applicants are advised to seek guidance from specific foreign countries to ensure that patent rights are not lost prematurely.

Applicants also are advised that in the case of inventions made in the United States, the Director of the USPTO must issue a license before applicants can apply for a patent in a foreign country. The filing of a U.S. patent application serves as a request for a foreign filing license. The application's filing receipt contains further information and guidance as to the status of applicant's license for foreign filing.

Applicants may wish to consult the USPTO booklet, "General Information Concerning Patents" (specifically, the section entitled "Treaties and Foreign Patents") for more information on timeframes and deadlines for filing foreign patent applications. The guide is available either by contacting the USPTO Contact Center at 800-786-9199, or it can be viewed on the USPTO website at http://www.uspto.gov/web/offices/pac/doc/general/index.html.

For information on preventing theft of your intellectual property (patents, trademarks and copyrights), you may wish to consult the U.S. Government website, http://www.stopfakes.gov. Part of a Department of Commerce initiative, this website includes self-help "toolkits" giving innovators guidance on how to protect intellectual property in specific countries such as China, Korea and Mexico. For questions regarding patent enforcement issues, applicants may call the U.S. Government hotline at 1-866-999-HALT (1-866-999-4158).

LICENSE FOR FOREIGN FILING UNDER

Title 35, United States Code, Section 184

Title 37, Code of Federal Regulations, 5.11 & 5.15

GRANTED

The applicant has been granted a license under 35 U.S.C. 184, if the phrase "IF REQUIRED, FOREIGN FILING LICENSE GRANTED" followed by a date appears on this form. Such licenses are issued in all applications where the conditions for issuance of a license have been met, regardless of whether or not a license may be required as

set forth in 37 CFR 5.15. The scope and limitations of this license are set forth in 37 CFR 5.15(a) unless an earlier license has been issued under 37 CFR 5.15(b). The license is subject to revocation upon written notification. The date indicated is the effective date of the license, unless an earlier license of similar scope has been granted under 37 CFR 5.13 or 5.14.

This license is to be retained by the licensee and may be used at any time on or after the effective date thereof unless it is revoked. This license is automatically transferred to any related applications(s) filed under 37 CFR 1.53(d). This license is not retroactive.

The grant of a license does not in any way lessen the responsibility of a licensee for the security of the subject matter as imposed by any Government contract or the provisions of existing laws relating to espionage and the national security or the export of technical data. Licensees should apprise themselves of current regulations especially with respect to certain countries, of other agencies, particularly the Office of Defense Trade Controls, Department of State (with respect to Arms, Munitions and Implements of War (22 CFR 121-128)); the Bureau of Industry and Security, Department of Commerce (15 CFR parts 730-774); the Office of Foreign AssetsControl, Department of Treasury (31 CFR Parts 500+) and the Department of Energy.

NOT GRANTED

No license under 35 U.S.C. 184 has been granted at this time, if the phrase "IF REQUIRED, FOREIGN FILING LICENSE GRANTED" DOES NOT appear on this form. Applicant may still petition for a license under 37 CFR 5.12, if a license is desired before the expiration of 6 months from the filing date of the application. If 6 months has lapsed from the filing date of this application and the licensee has not received any indication of a secrecy order under 35 U.S.C. 181, the licensee may foreign file the application pursuant to 37 CFR 5.15(b).

UNITED STATES PATENT AND TRADEMARK OFFICE

Commissioner for Patents
United States Patent and Trademark Office
Washington, D.C. 20231
www.uspto.gov

CHANG-FENG WAN
16210 SHADYBANK DRIVE
DALLAS TX 75248

COPY MAILED

JUN 09 2008

OFFICE OF PETITIONS

In re Application of :
Chang-Feng Wan :
Application No. 10/712,196 : ON PETITION
Filed: November 13, 2003 :
Attorney Docket No. JSF002-0004 :

This is a decision on the petition filed February 5, 2008 under 37 CFR 1.181(b) to withdraw the holding of abandonment, in accordance with the reasoning of the decision in Delgar Inc. v. Schuyler, 172 USPQ 513.

The petition is **GRANTED**.

This application became abandoned for failure to pay the issue fee on or before October 1, 2007 as was required by the Notice of Allowance mailed June 29, 2007. This application therefore became abandoned on October 2, 2007. Accordingly, a Notice of Abandonment was mailed January 16, 2008.

The file record discloses that the Notice of Allowance was mailed to the address of record, the same address to which the Notice of Abandonment was mailed and received. However, petitioner contends that the Notice of Allowance was not received. In support, petitioner indicates that a search of the file records revealed that the Notice was not received and submits copies of pages from the docketing system used, wherein receipt of the Notice would have been entered, had it been received to substantiate the claim. The statement and attachments corroborate non-receipt of the Notice of Allowance.

In view of the facts set forth in the petition, it is concluded that the Notice of Allowance was never received. Accordingly, the holding of abandonment is withdrawn. No petition fee is due and none has been charged.

This application is being forwarded to the Technology Center 2811 for a remailing of the Notice of Allowance and Notice of Allowability.

Telephone inquiries concerning this matter should be directed to the undersigned Petitions Attorney at (571) 272-3212.

Patricia Faison-Ball

Patricia Faison-Ball
Senior Petitions Attorney
Office of Petitions

UNITED STATES PATENT AND TRADEMARK OFFICE

Commissioner for Patents
United States Patent and Trademark Office
P.O. Box 1450
Alexandria, VA 22313-1450
www.uspto.gov

August 8, 2005

David S. Kalmbaugh
COMMANDER (CODE K00000E)
NAVAIR WEAPONS DIVISION
575 "I" Avenue Suite
Point Mugu, CA 93042-5049

Patent No.: **6885348 B1**
Inventor(s): **Marvin L. Ryken, Jr., et al.**
Issued: April 26, 2005
Title: **TEST CHAMBER FOR A LOW BAND ANTENNA ARRAY**

Re: Request for Certificate of Correction

Consideration has been given your request for the issuance of a certificate of correction for the above-identified patent under the provisions of Rule(s) 1.322 and/or 1.323.

Assignees' names and addresses (assignment data) printed in a patent, are based *solely* on information supplied in the appropriate space for identifying the assignment data, i.e., item 3 of the Issue Fee Transmittal Form PTOL-85B. Granting of a request under 37 CFR 3.81(b) is required to correct applicant's error providing ***incorrect or erroneous*** assignment data, *before* issuance of a Certificate of Correction, under 37 CFR 1.323 *(see Manual of Patent Examining Procedures (M.P.E.P) Chp.1400, sect. 1481).* This procedure is required *at any time after the issue fee is paid*, including after issuance of the patent.

In view of the foregoing, your request, in this mater, is hereby denied.

A request to correct the Assignee under 37 CFR 3.81(b) should include:

A. **the processing fee set forth in 37 CFR 1.117(h) (currently $130);**
B. a statement that the failure to include the correct assignee name on the PTOL-85B was inadvertent; and
C. a copy of the Notice of Recordation of Assignment Document, reflecting the reel and frame number where the assignment(s) is recorded and/or reflecting proof of *the date* the assignment was submitted for recordation.

In the Request, Applicant(s) may request that the file be forwarded to Certificates of Correction Branch, for issuance of a Certificate of Correction, if the Request is granted.

Any request under 37 CFR 3.81(b) should be directed to the following address or facsimile number:

By mail:	Mail Stop PETITIONS Commissioner for Patents Post Office Box 1450 Alexandria, VA 22313-1450
By hand:	Customer Service Window Mail Stop Petitions Randolph Building 401 Dulany Street Alexandria, VA 22314
By fax:	(703) 872-9306 ATTN: Office of Petitions

If a fee (currently $100) was previously submitted for consideration of a Request for Certificate of Correction, under CFR 1.323, to correct assignment data, no additional fee is required.

A certificate of correction will be issued to correct the remaining error mentioned in your request.

Virginia Tolbert
For Cecelia Newman
Decisions & Certificates
of Correction Branch
(703) **308-9390 ext 113** or (703) 308-8309

vt

UNITED STATES PATENT AND TRADEMARK OFFICE

COMMISSIONER FOR PATENTS
UNITED STATES PATENT AND TRADEMARK OFFICE
P.O. BOX 1450
ALEXANDRIA, VA 22313-1450
www.uspto.gov

NAVAIRWD COUNSEL GROUP
575 "I" AVE, SUITE 1 (CODE K00000E)
BUILDING 36, ROOM 2308
POINT MUGU, CA 93042-5049

COPY MAILED

OCT 21 2005

OFFICE OF PETITIONS

In re Application of :
Ryken et al. :
Application No. 10/712,220 :
Filed: November 11, 2003 :
Patent No.: 6,885,348 :
Issued: April 26, 2005 :
Attorney Docket No. :
84912 :

This is a decision on the Request for Certificate of Correction of Patent for Applicant's Mistake (37 CFR 1.323), filed August 26, 2005, to request a change in the name of the assignee after payment of the issue fee. The petition is properly treated as a request under 37 CFR 3.81(b)[1].

The Petition is **granted**.

Telephone inquiries concerning this matter should be directed to the undersigned at (571) 272-3232. Any questions concerning the issuance of the Certificate of Correction should be directed to the Certificate of Correction Branch at (703) 305-8309.

The application is being referred to the Certificate of Corrections Branch for issuance of the requested Certificate of Correction.

Derek L. Woods
Attorney
Office of Petitions

[1] See, 1283 OG 148 22 June 2004, 69 Fed. Reg. 29865 26 May 2004

UNITED STATES PATENT AND TRADEMARK OFFICE

COMMISSIONER FOR PATENTS
UNITED STATES PATENT AND TRADEMARK OFFICE
P.O. BOX 1450
ALEXANDRIA, VA 22313-1450
www.uspto.gov

LAW OFFICES OF CLEMENT CHENG
17220 NEWHOPE STREET #127
FOUNTAIN VALLEY, CA 92708

COPY MAILED

DEC 21 2004

OFFICE OF PETITIONS

In re Application of :
Kelly Kleinman :
Application No. 10/712,230 : ON PETITION
Filed: November 13, 2003 :
Attorney Docket No. Celebrity.01 :

This is a decision in response to the petition under 37 CFR 1.137(b), filed October 4, 2004, to revive the above-identified application.

The petition is dismissed because it lacks the required petition fee pursuant to 37 CFR 1.17(m).

Effective October 1, 2004, the small entity fee for a petition to revive an unintentionally abandoned application was increased to $685. Using a Certificate of Mailing or Transmission dated October 1, 2004, petitioner submitted a partial petition fee payment in the form of a check for $665. There is no authorization found in the papers filed October 4, 2004 to charge any fee deficiency. Unfortunately, the petition fee was further increased to $750 effective December 8, 2004. Since any fee paid on or after December 8, 2004, must be paid at the revised amount, petitioner must now submit the petition fee deficiency of $85.

Any request for reconsideration of this decision must be submitted within TWO (2) MONTHS from the mail date of this decision. Extensions of time under 37 CFR 1.136(a) are permitted. The reconsideration request should include the $85 petition fee deficiency and a cover letter entitled "Renewed Petition under 37 CFR 1.137(b)." This is **not** final agency action within the meaning of 5 U.S.C. § 704.

Further correspondence with respect to this matter should be addressed as follows:

By mail: Mail Stop PETITION
Commissioner for Patents
Post Office Box 1450
Alexandria, VA 22313-1450

By hand: U.S. Patent and Trademark Office
220 20th Street S.
Customer Window, Mail Stop PETITION
Crystal Plaza Two, Lobby, Room 1B03
Arlington, VA 22202

The centralized facsimile number is **(703) 872-9306**.

Any questions concerning this matter may be directed to the undersigned at (571) 272-3204.

Sherry D. Brinkley
Petitions Examiner
Office of Petitions
Office of the Deputy Commissioner
for Patent Examination Policy

UNITED STATES PATENT AND TRADEMARK OFFICE

COMMISSIONER FOR PATENTS
UNITED STATES PATENT AND TRADEMARK OFFICE
P.O. BOX 1450
ALEXANDRIA, VA 22313-1450
www.uspto.gov

LAW OFFICES OF CLEMENT CHENG
17220 NEWHOPE STREET #127
FOUNTAIN VALLEY, CA 92708

COPY MAILED

MAR 2 2 2005

OFFICE OF PETITIONS

In re Application of :
Kelly Kleinman :
Application No. 10/712,230 : ON PETITION
Filed: November 13, 2003 :
Attorney Docket No. Celebrity.01 :

This is a decision on the renewed petition, filed January 18, 2005, to revive the above-identified application under the provisions of 37 CFR 1.137(b).

The application became abandoned for a failure to reply in a timely manner to the non-final Office action mailed March 9, 2004. A Notice of Abandonment was mailed on September 22, 2004.

The petition is found to comply with the requirements of 37 CFR 1.137(b). Accordingly, the petition is **GRANTED**.

Telephone inquiries concerning this decision may be directed to the undersigned at (571) 272-3204. All other inquiries regarding this application should be directed to the Technology Center.

The application file is being referred to Technology Center AU 3712 for consideration of the amendment filed October 4, 2004.

Sherry D. Brinkley
Petitions Examiner
Office of Petitions
Office of the Deputy Commissioner
for Patent Examination Policy

UNITED STATES PATENT AND TRADEMARK OFFICE

UNITED STATES DEPARTMENT OF COMMERCE
United States Patent and Trademark Office
Address: COMMISSIONER FOR PATENTS
P.O. Box 1450
Alexandria, Virginia 22313-1450
www.uspto.gov

SIEMENS CORPORATION
INTELLECTUAL PROPERTY DEPARTMENT
170 WOOD AVENUE SOUTH
ISELIN, NJ 08830

Mail Date: 04/26/2010

Applicant	: Gary Ganzi	: DECISION ON REQUEST FOR
Patent Number	: 7604725	: RECALCULATION of PATENT
Issue Date	: 10/20/2009	: TERM ADJUSTMENT IN VIEW
Application No	: 10/712,250	: OF WYETH AND NOTICE OF INTENT TO
Filed	: 11/13/2003	: ISSUE CERTIFICATE OF CORRECTION
		:

The Request for Recalculation is **GRANTED** to the extent indicated.

The patent term adjustment has been determined to be **1235** days. The USPTO will *sua sponte* issue a certificate of correction reflecting the amount of PTA days determined by the recalculation.

Prior to the issuance of the certificate of correction, the USPTO will afford patentee an opportunity to be heard and request reconsideration. Accordingly, patentee has **one month or thirty (30) days**, whichever is longer, to file a request for reconsideration of this patent term adjustment calculation. See 35 U.S.C. 154(b)(3)(B)(ii) and 37 CFR 1.322(a)(4). No extensions of time will be granted under 37 CFR 1.136.

Patentee should use document code PET.OP if electronically filing a request for reconsideration of this patent term adjustment calculation. The patentee must also include the information required by 37 CFR 1.705(b)(2) and the fee required by 37 CFR 1.18(e). If patentee does not file a timely request for reconsideration of this patent term adjustment calculation including the information required by 37 CFR 1.705(b)(2) and the fee required by 37 CFR 1.18(e), the USPTO will issue a certificate of correction reflecting the PTA determination noted above.

Patentee should be aware that in order to preserve the right to review in the United States District Court for the District of Columbia of the USPTO patent term adjustment determination, patentee must ensure that he or she also take the steps required under 35 U.S.C. 154(b)(4)(A) in a timely manner. Nothing in the request for recalculation should be construed as providing an alternative time frame for commencing a civil action under 35 U.S.C. 154(b)(4)(A).

Any questions concerning this decision should be directed to the Office of Patent Legal Administration at 571-272-7702.

UNITED STATES PATENT AND TRADEMARK OFFICE

COMMISSIONER FOR PATENTS
UNITED STATES PATENT AND TRADEMARK OFFICE
P.O. BOX 1450
ALEXANDRIA, VA 22313-1450
www.uspto.gov

PILLSBURY WINTHROP SHAW PITTMAN, LLP
P.O. BOX 10500
MCLEAN, VA 22102

COPY MAILED
JUN 2 0 2006
OFFICE OF PETITIONS

In re Application of :
Jeunink, et al. : DECISION ON APPLICATION
Application No. 10/712,264 : FOR PATENT TERM ADJUSTMENT
Filed: November 14, 2003 :
Atty. Dkt. No.: 081468-0306683 :

This is a decision on the "APPLICATION FOR PATENT TERM ADJUSTMENT UNDER 37 C.F.R. § 1.705(b)" filed May 23, 2006.

The application for patent term adjustment ("PTA") under 37 CFR 1.705(b) is hereby **GRANTED**.

The correct patent term adjustment (PTA) at the time of the allowance is 49 days. The Office will adjust the PAIR screen to reflect that the PTA determination at the time of mailing of the Notice of Allowance reflects an adjustment of 49 days. A copy of the updated PAIR screen showing the correct determination is enclosed.

The Determination of Patent Term Adjustment under 35 U.S.C. 154(b) in the above-identified application, mailed March 10, 2006, indicated that the PTA to date is two days. The instant application for patent term adjustment was timely filed May 23, 2006. Applicant requests that the PTA be corrected from two days to reflect an adjustment of 49 days.

A review of the application history reveals that as of the time of allowance, an adjustment of 49 days can be attributed to the Office in accordance with 37 CFR 1.702(a)(1) and 1.703(a)(1)

The Office errantly reduced the adjustment 47 days, as argued by applicants, in connection with the amendment submitted July 21, 2005 in response to the supplemental non-final rejection mailed April 22, 2005. A non-final rejection was mailed March 4, 2005. The supplemental non-final rejection mailed April 18, 2005 set a new period of time for reply, to which applicants timely responded on July 21, 2005.

In view thereof, at the time of allowance, the application is entitled to an adjustment of 49 days, as argued by applicants.

The required Patent Term Adjustment application fee of $200.00 has been charged to applicants' Deposit Number, as authorized in the instant application for Patent Term Adjustment.

The application file is being forwarded to the Publications Division for issuance of a patent.

Telephone inquiries specific to this matter should be directed to Petitions Attorney Alesia M. Brown at (571) 272-3205.

Kery A Fries

Kery Fries
Senior Legal Advisor
Office of Patent Legal Administration
Office of Deputy Commissioner
for Patent Examination Policy

cc: Adjusted Pat. Collection

UNITED STATES PATENT AND TRADEMARK OFFICE

Commissioner for Patents
United States Patent and Trademark Office
P.O. Box 1450
Alexandria, VA 22313-1450
www.uspto.gov

HELLER EHRMAN LLP
4350 LA JOLLA VILLAGE DRIVE
7TH FLOOR
SAN DIEGO, CA 92122

COPY MAILED
DEC 10 2008

In re Application of	:	
Richard Bruce Brandon, et al.	:	
Application No. 10/712,266	:	DECISION ON PETITION
Filed: November 14, 2003	:	TO WITHDRAW
Attorney Docket No. 40383-0006	:	FROM RECORD
	:	

This is a decision on the Request to Withdraw as attorney or agent under 37 C.F.R. § 1.36(b) filed August 29, 2008.

The request is **NOT APPROVED**.

A review of the file record indicates that Leslie Overman of Foley & Lardner, LLP does not have power of attorney in this patent application. See 37 C.F.R. § 10.40. Accordingly, the request to withdraw under 37 C.F.R. § 1.36(b) is not applicable.

All future communications from the Office will continue to be directed to the below-listed address until otherwise properly notified by the applicant.

Telephone inquires concerning this decision should be directed to undersigned at 571-272-1642.

/AMW/
April M. Wise
Petitions Examiner
Office of Petitions

cc: PROSKAUER ROSE, LLP
1001 PENNSYLVANIA AVENUE, NW
SUITE 400 SOUTH
WASHINGTON, DC 20004

UNITED STATES PATENT AND TRADEMARK OFFICE

Commissioner for Patents
United States Patent and Trademark Office
P.O. Box 1450
Alexandria, VA 22313-1450
www.uspto.gov

PROSKAUER ROSE LLP
ONE INTERNATIONAL PLACE
BOSTON, MA 02110

MAILED

JUL 08 2010

OFFICE OF PETITIONS

In re Application of
Richard Bruce Brandon, et al.
Application No. 10/712,266
Filed: November 14, 2003
Attorney Docket No. 00704.8022.US00

DECISION ON PETITION
TO WITHDRAW
FROM RECORD

This is a decision on the Request to Withdraw as attorney or agent under 37 C.F.R. § 1.36(b) filed May 14, 2010.

The request is **NOT APPROVED**.

A review of the file record indicates that Jennifer A. Camacho does not have power of attorney in this patent application. See 37 C.F.R. § 10.40. Accordingly, the request to withdraw under 37 C.F.R. § 1.36(b) is not applicable.

All future communications from the Office will continue to be directed to the below-listed address until otherwise properly notified by the applicant.

Telephone inquires concerning this decision should be directed to undersigned at 571-272-1642. All other inquiries concerning the examination or status of this application should be directed to the Technology Center.

/AMW/
April M. Wise
Petitions Examiner
Office of Petitions

cc: DAVIES COLLISON CAVE
PERKINS COIE LLP
607 FOURTEENTH STREET, NW
WASHINGTON, DC 20005

UNITED STATES PATENT AND TRADEMARK OFFICE

Commissioner for Patents
United States Patent and Trademark Office
P.O. Box 1450
Alexandria, VA 22313-1450
www.uspto.gov

MAILED
FROM DIRECTORS OFFICE

FEB 1 0 2006

TECHNOLOGY CENTER 3600

Elisa Jones
1745 Creek Dr.
San Jose, CA 95125-1841

In re Application of: Steven Ibara et al.	:	PETITION TO INOKE
Application No. 10/712,281	:	SUPERVISORY AUTHORITY
Filed: November 12, 2003	:	UNDER
Attorney Docket No.: WindRein	:	37 C.F.R. 1.181
For: PAGE HOLDER ENABLING UNENCUMBERED MANUAL PAGE TURNING	:	

This is in response to applicant's petition filed on December 19, 2005 for withdrawal of the Drawing Objection raised by the examiner in the October 20, 2005 Office action.

The petition is **GRANTED.**

The petitioner argues that the drawings as originally filed show a self-retracting reel labeled as 14 and the specification provides further discussion as to the self-retracting reel utilizing a metal spring. As such, the petitioner believes that the drawings adequately disclose all of the claimed features.

A review of the file history indicates that the examiner's objection to the drawings in the October 20, 2005 Office action was based on a belief that the drawings fail to illustrate the details of a "spring biased reel". Looking to the drawings, a box 14 is defined as being a spring biased reel. Since the details of spring biased reels for allowing pay out and retraction of filaments for numerous uses are well known in the art, the details displayed in the drawings of the instant application are considered sufficient to support the claims.

Accordingly, the petition with respect to the request for withdraw of the drawing objection is granted. The case will be forwarded to the examiner for handling of the Pre-Appeal Conference request filed on January 18, 2006.

Summary: ***Petition GRANTED.***

John J. Love, Director
Patent Technology Center 3600
(571)-272-5250

RPO/SNM: 2/2/06

UNITED STATES PATENT AND TRADEMARK OFFICE

Commissioner for Patents
United States Patent and Trademark Office
P.O. Box 1450
Alexandria, VA 22313-1450
www.uspto.gov

ELISA JONES
1745 CREEK DR.
SAN JOSE CA 95125-1841

COPY MAILED

JUN 04 2009

OFFICE OF PETITIONS

In re Application of :
Ibara et al. :
Application No. 10/712,281 : ON PETITION
Filed: November 12, 2003 :
Attorney Docket No. WINDREIN :

This is a decision on the petition under 37 CFR 1.182, filed, March 30, 2009, to correct the spelling of the name of inventor "Elisa Marie Jones" to – Elisa Marie Jansen –.

The petition is **GRANTED**.

Office records have been corrected to reflect the correct spelling of the above-named inventor. A corrected Filing Receipt, which sets forth the correct name of the above-named inventor, accompanies this decision on petition.

As authorized, the $400 fee for the petition under 37 CFR 1.182 has been assessed to petitioner's deposit account.

Any questions concerning this matter may be directed to the undersigned at (571) 272-571-272-3206.

The matter is being referred to the Office of Data Management to await a response to the Notice of Allowance mailed March 6, 2009.

Liana Walsh
Petitions Examiner
Office of Petitions

Enclosure: Corrected Filing Receipt

UNITED STATES PATENT AND TRADEMARK OFFICE

UNITED STATES DEPARTMENT OF COMMERCE
United States Patent and Trademark Office
Address: COMMISSIONER FOR PATENTS
P.O. Box 1450
Alexandria, Virginia 22313-1450
www.uspto.gov

APPLICATION NUMBER	FILING or 371(c) DATE	GRP ART UNIT	FIL FEE REC'D	ATTY.DOCKET.NO	TOT CLAIMS	IND CLAIMS
10/712,281	11/12/2003	3632	485	WINDREIN	20	2

CONFIRMATION NO. 9319

CORRECTED FILING RECEIPT

Elisa Jones
1745 Creek Dr.
San Jose, CA 95125-1841

Date Mailed: 05/26/2009

Receipt is acknowledged of this non-provisional patent application. The application will be taken up for examination in due course. Applicant will be notified as to the results of the examination. Any correspondence concerning the application must include the following identification information: the U.S. APPLICATION NUMBER, FILING DATE, NAME OF APPLICANT, and TITLE OF INVENTION. Fees transmitted by check or draft are subject to collection. Please verify the accuracy of the data presented on this receipt. **If an error is noted on this Filing Receipt, please submit a written request for a Filing Receipt Correction. Please provide a copy of this Filing Receipt with the changes noted thereon. If you received a "Notice to File Missing Parts" for this application, please submit any corrections to this Filing Receipt with your reply to the Notice. When the USPTO processes the reply to the Notice, the USPTO will generate another Filing Receipt incorporating the requested corrections**

Applicant(s)

Steven Stewart Ibara, San Carlos, CA;
Crystal Gwen Steinke, San Jose, CA;
Joel Harian Jones, San Jose, CA;
Vicky Greenbaum, Redwood City, CA;
David A. Woodley Packard, Los Altos Hills, CA;
Elisa Marie Jansen, San Jose, CA;

Power of Attorney: None

Domestic Priority data as claimed by applicant

Foreign Applications

If Required, Foreign Filing License Granted: 02/06/2004

The country code and number of your priority application, to be used for filing abroad under the Paris Convention, is **US 10/712,281**

Projected Publication Date: Not Applicable

Non-Publication Request: No

Early Publication Request: No
**** SMALL ENTITY ****

Title

PAGE HOLDER ENABLING UNENCUMBERED MANUAL PAGE TURNING

Preliminary Class

248

PROTECTING YOUR INVENTION OUTSIDE THE UNITED STATES

Since the rights granted by a U.S. patent extend only throughout the territory of the United States and have no effect in a foreign country, an inventor who wishes patent protection in another country must apply for a patent in a specific country or in regional patent offices. Applicants may wish to consider the filing of an international application under the Patent Cooperation Treaty (PCT). An international (PCT) application generally has the same effect as a regular national patent application in each PCT-member country. The PCT process **simplifies** the filing of patent applications on the same invention in member countries, but **does not result** in a grant of "an international patent" and does not eliminate the need of applicants to file additional documents and fees in countries where patent protection is desired.

Almost every country has its own patent law, and a person desiring a patent in a particular country must make an application for patent in that country in accordance with its particular laws. Since the laws of many countries differ in various respects from the patent law of the United States, applicants are advised to seek guidance from specific foreign countries to ensure that patent rights are not lost prematurely.

Applicants also are advised that in the case of inventions made in the United States, the Director of the USPTO must issue a license before applicants can apply for a patent in a foreign country. The filing of a U.S. patent application serves as a request for a foreign filing license. The application's filing receipt contains further information and guidance as to the status of applicant's license for foreign filing.

Applicants may wish to consult the USPTO booklet, "General Information Concerning Patents" (specifically, the section entitled "Treaties and Foreign Patents") for more information on timeframes and deadlines for filing foreign patent applications. The guide is available either by contacting the USPTO Contact Center at 800-786-9199, or it can be viewed on the USPTO website at http://www.uspto.gov/web/offices/pac/doc/general/index.html.

For information on preventing theft of your intellectual property (patents, trademarks and copyrights), you may wish to consult the U.S. Government website, http://www.stopfakes.gov. Part of a Department of Commerce initiative, this website includes self-help "toolkits" giving innovators guidance on how to protect intellectual property in specific countries such as China, Korea and Mexico. For questions regarding patent enforcement issues, applicants may call the U.S. Government hotline at 1-866-999-HALT (1-866-999-4158).

LICENSE FOR FOREIGN FILING UNDER

Title 35, United States Code, Section 184

Title 37, Code of Federal Regulations, 5.11 & 5.15

GRANTED

The applicant has been granted a license under 35 U.S.C. 184, if the phrase "IF REQUIRED, FOREIGN FILING LICENSE GRANTED" followed by a date appears on this form. Such licenses are issued in all applications where the conditions for issuance of a license have been met, regardless of whether or not a license may be required as

set forth in 37 CFR 5.15. The scope and limitations of this license are set forth in 37 CFR 5.15(a) unless an earlier license has been issued under 37 CFR 5.15(b). The license is subject to revocation upon written notification. The date indicated is the effective date of the license, unless an earlier license of similar scope has been granted under 37 CFR 5.13 or 5.14.

This license is to be retained by the licensee and may be used at any time on or after the effective date thereof unless it is revoked. This license is automatically transferred to any related applications(s) filed under 37 CFR 1.53(d). This license is not retroactive.

The grant of a license does not in any way lessen the responsibility of a licensee for the security of the subject matter as imposed by any Government contract or the provisions of existing laws relating to espionage and the national security or the export of technical data. Licensees should apprise themselves of current regulations especially with respect to certain countries, of other agencies, particularly the Office of Defense Trade Controls, Department of State (with respect to Arms, Munitions and Implements of War (22 CFR 121-128)); the Bureau of Industry and Security, Department of Commerce (15 CFR parts 730-774); the Office of Foreign AssetsControl, Department of Treasury (31 CFR Parts 500+) and the Department of Energy.

NOT GRANTED

No license under 35 U.S.C. 184 has been granted at this time, if the phrase "IF REQUIRED, FOREIGN FILING LICENSE GRANTED" DOES NOT appear on this form. Applicant may still petition for a license under 37 CFR 5.12, if a license is desired before the expiration of 6 months from the filing date of the application. If 6 months has lapsed from the filing date of this application and the licensee has not received any indication of a secrecy order under 35 U.S.C. 181, the licensee may foreign file the application pursuant to 37 CFR 5.15(b).

UNITED STATES PATENT AND TRADEMARK OFFICE

Commissioner for Patents
United States Patent and Trademark Office
P.O. Box 1450
Alexandria, VA 22313-1450
www.uspto.gov

MAILED

NOV 19 2004

DIRECTOR'S OFFICE
TECHNOLOGY CENTER 3600

Denton L. Anderson
9th Floor
225 South Lake Avenue
Pasadena, CA 91101

In re application of : **DECISION ON PETITION**
Robert J. Mills et al. : **TO MAKE SPECIAL**
Application No. 10/712,287 : **(INFRINGEMENT)**
Filed: November 12, 2003 :
For: CHAIR AND DESK COMBINATION

This is a decision on the petition under 37 C.F.R § 1.102(d) filed July 12, 2004 to make the above-identified application special.

The petition requests that the above-identified application be made special under the procedure set forth in M.P.E.P. § 708.02, item II: Infringement.

MPEP 708.02 states that a Petition to Make Special based on Infringement must have the following: (1) the appropriate petition fee under 37 CFR 1.17(i); (2) a statement by the assignee, applicant, or attorney alleging: (A) that there is an infringing device or product actually on the market or method in use; (B) that a rigid comparison of the alleged infringing device, product or method with the claims of the application has been made, and that, in his or her opinion, some of the claims are unquestionably infringed; and (C) that he or she has made a careful and thorough search of the prior art, or has good knowledge of the prior art, and has sent a copy of the references deemed most closely related to the subject matter encompassed by the claims.

The petition filed July 12, 2004 meets all of the requirements above and, therefore, the petition is **GRANTED**.

With regards to element 2(C) above, an Information Disclosure Statement was filed on July 12, 2004.

The examiner is directed (1) to make an interference search for possible interfering applications; (2) to promptly examine this application out of turn; and (3) if any interfering application is discovered, to examine such application simultaneously and state in the first official letter of such application that it is being taken out of turn because of a possible interference.

Petitioner is advised that this application will continue to be special, throughout its entire prosecution and pendency, including interference and appeal, if any, only if petitioner makes a prompt *bona fide* effort, in response to each Office action, to place the application in condition for allowance, even if it is necessary to conduct an interview with the examiner to accomplish this purpose.

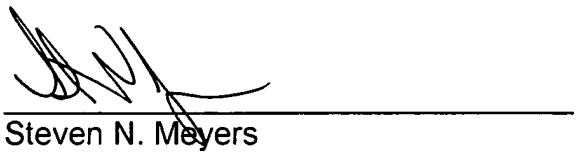

Steven N. Meyers
Special Programs Examiner
Technology Center 3600
(703) 308-3868

SNM/snm: 11/16/04

UNITED STATES PATENT AND TRADEMARK OFFICE

Commissioner for Patents
United States Patent and Trademark Office
P.O. Box 1450
Alexandria, VA 22313-1450
www.uspto.gov

FOLEY AND LARDNER
3000 K ST NW STE 500
WASHINGTON, DC 20007

COPY MAILED

MAY 12 2006

OFFICE OF PETITIONS

In re Application of	:	
Abrams et al.	:	DECISION ON PETITION
Application No. 10/712,296	:	TO WITHDRAW
Filed: November 14, 2003	:	FROM RECORD
Attorney Docket No. 034536-0680	:	

This is a decision on the Request to Withdraw as attorney or agent of record under 37 C.F.R. § 1.36(b), filed September 30, 2005.

The request is **NOT APPROVED** as moot.

A review of the file record indicates that the power of attorney to attorneys associated with Customer Number 30543 has been revoked by the assignee of the entire interest of the patent application. Accordingly, the request to withdraw under 37 C.F.R. § 1.36(b) is moot.

All future communications from the Office will continue to be directed to the below-listed address until otherwise notified by applicant.

Telephone inquires concerning this decision should be directed to Petitions Examiner Liana Chase at 571-272- 3206.

David Bucci
Petitions Examiner
Office of Petitions

cc:

AGOURON PHARMACEUTICALS, INC.
10777 SCIENCE CENTER DRIVE
SAN DIEGO CA 92121

UNITED STATES PATENT AND TRADEMARK OFFICE

Commissioner for Patents
United States Patent and Trademark Office
P.O. Box 1450
Alexandria, VA 22313-1450
www.uspto.gov

Paper No.

Phillip H. Albert
TOWNSEND AND TOWNSEND AND CREW, LLP
Two Embarcadero Center
Eighth Floor
San Francisco, CA 94111-3834

MAILED

JAN 25 2006

TECHNOLOGY CENTER 2100

In re Application of:
Kapur
Application No. 10/712,307
Filed: November 12, 2003
For: SYSTEMS AND METHODS FOR SEARDCH QUERY PROCESSING USING TREND ANALYSIS

DECISION ON REQUEST TO WITHDRAW AS ATTORNEY OR AGENT

This is a decision on the Request To Withdraw from Representation Under 37 CFR 1.36 and 10.40(c) filed August 25, 2005.

A Power of Attorney Under 37 CFR 1.36 was filed on September 06, 2005. The Power Of Attorney revoked all prior Powers Of Attorney and appointed HICKMAN PALERMO TRUONG & BECKER, LLP as the attorneys of record of the instant application. The Power Of Attorney of September 06, 2005, was accepted. Accordingly, all communications from the U.S. Patent and Trademark Office to applicant are to be conducted by HICKMAN PALERMO TRUONG & BECKER, LLP.

For the above stated reasons, the request is **DISMISSED AS MOOT**.

No further communication to you regarding this application will be made.

James D. Matthews

for Vincent N. Trans
Special Program Examiner
Technology Center 2100
Computer Architecture, Software, and
Information Security

cc: HICKMAN PALERMO TRUONG &
BECKER, LLP
2055 Gateway Place
Suite, 550
San Jose, CA 95110

UNITED STATES PATENT AND TRADEMARK OFFICE

Commissioner for Patents
United States Patent and Trademark Office
P.O. Box 1450
Alexandria, VA 22313-1450
www.uspto.gov

GENE WARZECHA
LINVATEC CORPORATION
11311 CONCEPT BOULEVARD
LARGO FL 33773

COPY MAILED

DEC 2 1 2005

OFFICE OF PETITIONS

In re Application of :
HUGH S. JR. WEST, et al :
Application No. 10/712,316 : DECISION ON PETITION
Filed: November 13, 2003 : UNDER 37 CFR 1.137(b)
Attorney Docket No. ZL0253 :

This is a decision on the petition filed October 14, 2005 under 37 CFR 1.137(b), to revive the above-identified application.

The petition is **GRANTED**.

The application became abandoned for failure to reply in a timely manner to the Restriction Requirement mailed August 11, 2005 which set a shortened statutory period for reply of one (1) month or thirty (30) days (whichever is later). No extensions of time under the provisions of 37 CFR 1.136(a) were obtained. Accordingly, the application became abandoned on September 12, 2005.

The petition satisfies the conditions for revival pursuant to the provisions of 37 CFR 1.137 (b) in that (1) the reply in the form of an election; (2) the petition fee of $1500 for a large entity; and (3) the required statement of unintentional delay have been received. Accordingly, the reply to the restriction requirement of August 11, 2005 is accepted as having been unintentionally delayed.

Telephone inquiries concerning this decision should be directed to Amelia Au at (571) 272-7414. All other inquiries concerning either the examination or status of the application should be directed to the Technology Center.

The application file is being referred to Technology Center Art Unit 3739 for appropriate action on the concurrently filed amendment.

Amelia Au
Petitions Examiner
Office of Petitions

SPE RESPONSE FOR CERTIFICATE OF CORRECTION

Paper No.: X

DATE : March 28, 2008

TO SPE OF : ART UNIT 2116

SUBJECT : Request for Certificate of Correction for Appl. No.: 10/712328 Patent No.: 7305573 B2

A response is requested with respect to a request for a certificate of correction.

With respect to the change(s) requested to correct Office and/or Applicant's errors, should the patent read as shown in the certificate of correction attached herewith or the COCIN document(s), in IFW images for the above-identified patented application? No new matter should be introduced, nor should the scope or meaning of the claims be changed.

If the response is for an IFW, within 7 days, please complete and forward the response, to the employee (named below) via scanning into application images, using document code **COCX**.

DO NOT SENT TO ATTORNEY

If the response is for a paper file wrapper, please complete the response and forward the response with the paper file wrapper, to the employee (named below), within 7 days, to:

Certificates of Correction Branch (CofC)
South Tower - 9A22
Palm Location 7580

You can fax the Directors/SPE response to 571-270-9990

LAMONTE NEWSOME
Certificates of Correction Branch
703-308-9390 ext. 112

Thank You For Your Assistance

The request for issuing the above-identified correction(s) is hereby:
Note your decision on the appropriate box.

x**Approved**	**All** changes apply.
☐ **Approved in Part**	Specify below which changes **do not** apply.
☐ **Denied**	State the reasons for denial below.

Comments: Typo "if" should be "is" in claim 25. No new matter or scope change is introduced. Thereby, change is approved.

/Rehana Perveen/
AU 2116

SPE **Art Unit**

PTOL-306 (REV. 7/03) U.S. DEPARTMENT OF COMMERCE Patent and Trademark Office

Formatted: Indent: Left: 1.22"
Formatted: Bullets and Numbering
Deleted:
Deleted:
Deleted:

SPE RESPONSE FOR CERTIFICATE OF CORRECTION

Paper No.: _____

DATE : 10/8/08

TO SPE OF : ART UNIT 2116 (2100)

SUBJECT : Request for Certificate of Correction for Appl. No.: 10/712,331 Patent No.: 7,254,734

Attn: Thuan Du

Please respond to this request for a certificate of correction within 7 days.

FOR IFW FILES:

Please review the requested changes/corrections as shown in the COCIN document(s) in the IFW application image. No new matter should be introduced, nor should the scope or meaning of the claims be changed.

Please complete the response (see below) and forward the completed response to scanning using document code COCX.

FOR PAPER FILES:

Please review the requested changes/corrections as shown in the attached certificate of correction. Please complete this form (see below) and forward it with the file to:

Certificates of Correction Branch (C of C)
South Tower - 9A22
Palm Location 7580

*ATTN: Ok to enter changes as requested in the COCIN?

Ernest C. White, LIE
Certificates of Correction Branch
703-308-9390 ext.122

Thank You For Your Assistance

The request for issuing the above-identified correction(s) is hereby:
Note your decision on the appropriate box.

☒ Approved	All changes apply.
☐ Approved in Part	Specify below which changes do not apply.
☐ Denied	State the reasons for denial below.

Comments: OK TO ENTER

Thomas Lee, SPE 2115

SPE RESPONSE FOR CERTIFICATE OF CORRECTION

SPE Art Unit

UNITED STATES PATENT AND TRADEMARK OFFICE

Commissioner for Patents
United States Patent and Trademark Office
P.O. Box 1450
Alexandria, VA 22313-1450
www.uspto.gov

MAILED

MAR 26 2010

OFFICE OF PETITIONS

Maria A. Trevisan
Wolf, Greenfield & Sacks, P.C.
600 Atlantic Avenue
Boston, MA 02210

In re Application of Pier et al. :
Application No. 10/712,391 : Decision On Application For
Filing Date: November 12, 2003 : Patent Term Adjustment
Attorney Docket No. B0801.70256US01 :

This is a decision on the "Application for Patent Term Adjustment Under 37 CFR §1.705" filed February 24, 2010. Applicants submit the correct patent term adjustment to be indicated on the patent is five hundred forty-two (542) days, not eighty-four (84) days as calculated by the Office as of the mailing of the initial determination of patent term adjustment.

Applicants request the correction to the patent term adjustment solely on the basis that the Office will take in excess of three years to issue this patent.

As the instant application for patent term adjustment requests reconsideration of the patent term adjustment as it relates to the Office's failure to issue the patent within 3 years of the filing date, the application for patent term adjustment under 37 CFR 1.705(b) is **DISMISSED as PREMATURE**.

Knowledge of the actual date the patent issues is required to calculate the amount, if any, of additional patent term patentee is entitled to for Office failure to issue the patent within 3 years. See 37 CFR 1.702(b). (This is true even where a request for continued examination (RCE) was filed). The computer will not undertake the § 1.702(b) calculation until the actual date of issuance of the patent has been determined. Likewise, the computer will not calculate any further Office delay under § 1.702(a)(4) or applicant delay under § 1.704(c)(10) until the actual date of issuance of the patent has been determined. As such, the Office can not make a determination on the correctness of the patent term adjustment until the patent has issued.

Requesting reconsideration of the patent term adjustment to be indicated on the patent under 37 CFR 1.705(b) based on the initial determination of patent term adjustment and a projected issuance date of the patent (or even the filing date of the request for continued examination) is premature. Accordingly, it is appropriate to dismiss as premature such a request.

Rather than file an application for patent term adjustment under 37 CFR 1.705(b) contesting the 37 CFR 1.702(b) calculation at the time of the mailing of the notice of allowance, an applicant may wait until the time of the issuance of the patent and file a request for reconsideration of the

patent term adjustment pursuant to 37 CFR 1.705(d). As the USPTO does not calculate the amount of time earned pursuant to 37 CFR 1.702(b) until the time of the issuance of the patent, the Office will consider any request for reconsideration of the patent term adjustment due to an error in the calculation of 37 CFR 1.702(b) to be timely if the request for reconsideration is filed within two months of the issuance of the patent. However, as to all other bases for contesting the initial determination of patent term adjustment received with the notice of allowance, applicant must timely file an application for patent term adjustment prior to the payment of the issue fee.[1]

The petition states,

> The USPTO has indicated that a fee is not due for any requests for PTA recalculation based on a Wyeth delay. Accordingly, Applicants is not submitting ... the required fee.... However, if such fee is considered due or if any additional fee is considered due, please charge such fee(s) to Deposit Account No. 23/2825.

The Office has issued a notice discussing a procedure which may be followed in order to avoid payment of a fee in some cases involving "*Wyeth* delay."[2] However, the procedure may not be used if a patent has not issued or if the patent issued on or after March 2, 2010. As stated in the notice,

> The procedure set forth in this notice ... may not be used to request a reconsideration of the patent term adjustment indicated in the notice of allowance in an application that has not yet issued as a patent.... Patentees seeking a revised patent term adjustment in a patent issued on or after March 2, 2010, must file a request for reconsideration under 37 CFR 1.705(d).[3]

In this case, the application for patent term adjustment was filed before issuance of the patent and the instant will not issue as a patent on a date prior to March 2, 2010. Therefore, the procedure set forth in the notice is inapplicable and the Office has charged the $200 fee set forth in 37 CFR 1.18(e) to Deposit Account No. 23-2825.

The Office of Data Management has been advised of this decision. This application is being referred to the Office of Data Management for issuance of the patent.

---

[1] For example, if applicant disputes both the calculation of patent term adjustment under 37 CFR 1.702(a)(1) for Office failure to mail a first Office action or notice of allowance not later than fourteen months after the date on which the application was filed and under 37 CFR 1.702(b) for Office failure to issue a patent within three years of the actual filing date of the application, then applicant must still timely file an application for patent term adjustment prior to the payment of the issue fee to contest the calculation of Office delay in issuing a first Office action or notice of allowance. *See* 37 CFR 1.705(b) and 35 U.S.C. 154(b)(3)(B). A dispute as to the calculation of the § 1.702(a)(1) period raised on request for reconsideration of patent term adjustment under 37 CFR 1.705(d) will be dismissed as untimely filed.

[2] Interim Procedure for Patentees to Request a Recalculation of the Patent Term Adjustment to Comply With the Federal Circuit Decision in Wyeth v. Kappos Regarding the Overlapping Delay Provision of 35 U.S.C. 154(b)(2)(A), 75 *Fed. Reg.* 5043 (February 1, 2010).

[3] Id. at 5044.

Telephone inquiries regarding this communication should be directed to Petitions Attorney Steven Brantley at (571) 272-3203.

Anthony Knight
Supervisor
Office of Petitions

UNITED STATES PATENT AND TRADEMARK OFFICE

Commissioner for Patents
United States Patent and Trademark Office
P.O. Box 1450
Alexandria, VA 22313-1450
www.uspto.gov

MORRIS MANNING MARTIN LLP
3343 PEACHTREE ROAD, NE
1600 ATLANTA FINANCIAL CENTER
ATLANTA, GA 30326

MAILED

JUL 01 2010

OFFICE OF PETITIONS

In re Application of :
James W. Lillard, Jr., et al. :
Application No. 10/712,393 : DECISION ON PETITION
Filed: November 14, 2003 :
Attorney Docket No.: 16043-74325 :

This is a decision on the petition under the unintentional provisions of 37 CFR 1.137(b), filed May 10, 2010, to revive the above-identified application.

The petition is **DISMISSED.**

Any request for reconsideration of this decision must be submitted within TWO (2) MONTHS from the mail date of this decision. Extensions of time under 37 CFR 1.136(a) are permitted. The reconsideration request should include a cover letter entitled "Renewed Petition under 37 CFR 1.137(b)." This is **not** a final agency action within the meaning of 5 U.S.C. § 704.

The application became abandoned for failure to reply in a timely manner to the Restriction Requirement, mailed July 26, 2005, which set a shortened statutory period for reply of one (1) month or thirty (30) days (whichever is later). It is noted that a reply was filed on November 25, 2005; however the reply was held nonresponsive by a letter mailed February 14, 2006. Consequently, the application became abandoned by operation of law on November 27, 2005. A Notice of Abandonment was subsequently mailed on November 17, 2006. On March 10, 2010, the present petition was filed.

A grantable petition under 37 CFR 1.137(b) must be accompanied by: (1) the required reply, unless previously filed; (2) the petition fee as set forth in 37 CFR 1.17(m); (3) a statement that the entire delay in filing the required reply from the due date for the reply until the filing of a grantable petition pursuant

to 37 CFR 1.137(b) was unintentional; and (4) any terminal disclaimer (and fee as set forth in 37 CFR 1.20(d)) required by 37 CFR 1.137(d). Where there is a question as to whether either the abandonment or the delay in filing a petition under 37 CFR 1.137 was unintentional, the Director may require additional information. *See* MPEP 711.03(c)(II)(C) and (D). The instant petition lacks item (3).

It is noted that petitioning counsel provides a statement of unintentional delay; however a review of the record does not show that he was in a position to have firsthand or direct knowledge of the facts and circumstances of the delay at issue since he was not involved in the prosecution of the application when the reply necessary to avoid abandonment was due. It is further noted that the petition includes a statement of unintentional delay by one of four joint inventors; however, the statement is unacceptable as it does not comply with the requirements of 37 CFR 1.33(b) which states:

> "Amendments and other papers, except for written assertions pursuant to § 1.27(c)(2)(ii) of this part, filed in the application must be signed by:
>
> (1) A registered patent attorney or patent agent of record appointed in compliance with § 1.32(b);
> (2) A registered patent attorney or patent agent not of record who acts in a representative capacity under the provisions of § 1.34;
> (3) An assignee as provided for under §3.71(b) of this chapter; or
> (4) **All of the applicants** (§ 1.41(b)) for patent, unless there is an assignee of the entire interest and such assignee has taken action in the application in accordance with § 3.71 of this chapter." Emphasis added.

An unsigned amendment (or other paper) or one not properly signed by a person having authority to prosecute the application is not entered. This applies, for instance, where the amendment (or other paper) is signed by only one of four applicants and the one signing has not been given a power of attorney by the other applicants.

Therefore, as the petition containing the statement of unintentional delay is not signed by all the inventors and the record herein fails to disclose that joint inventor James W. Lillard, Jr. was given a power of attorney to act on behalf of the other inventors, or that he is an assignee of the entire

interest and has complied with the provisions of 37 CFR 3.73(b), the petition is considered not to contain a statement of unintentional delay by applicant.

Lastly, there are three periods to be considered during the evaluation of a petition under 37 CFR 1.137(b):

(1) the delay in reply that originally resulted in the abandonment;

(2) the delay in filing an initial petition pursuant to 37 CFR 1.137(b) to revive the application; and

(3) the delay in filing a grantable petition pursuant to 37 CFR 1.137(b) to revive the application.

Currently, the delay has not been shown to the satisfaction of the Director to be unintentional for periods (1) and (2).

As to Period (1):

The patent statute at 35 U.S.C. § 41(a)(7) authorizes the Director to revive an "unintentionally abandoned application." The legislative history of Public Law 97-247 reveals that the purpose of 35 U.S.C. § 41(a)(7) is to permit the Office to have more discretion than in 35 U.S.C. §§ 133 or 151 to revive abandoned applications in appropriate circumstances, but places a limit on this discretion, stating that "[u]nder this section a petition accompanied by either a fee of $500 or a fee of $50 **would not be granted where the abandonment** or the failure to pay the fee for issuing the patent **was intentional** as opposed to being unintentional or unavoidable." [emphasis added]. See H.R. Rep. No. 542, 97th Cong., 2d Sess. 6-7 (1982), *reprinted in* 1982 U.S.C.C.A.N. 770-71. The revival of an intentionally abandoned application is antithetical to the meaning and intent of the statute and regulation.

35 U.S.C. § 41(a)(7) authorizes the Director to accept a petition "for the revival of an unintentionally abandoned application for a patent." As amended December 1, 1997, 37 CFR 1.137(b)(3) provides that a petition under 37 CFR 1.137(b) must be accompanied by a statement that the delay was unintentional, but provides that "[t]he Commissioner may require additional information where there is a question whether the delay was unintentional." Where, as here, there is a question whether the initial delay was unintentional, the petitioner must meet the burden of establishing that the delay was unintentional within the meaning of 35 U.S.C. § 41(a)(7) and 37 CFR 1.137(b). *See* In

re Application of G, 11 USPQ2d 1378, 1380 (Comm'r Pats. 1989); 37 CFR 1.137(b). Here, in view of the inordinate delay (over four years) in resuming prosecution, there is a question whether the entire delay was unintentional. Petitioner should note that the issue is not whether some of the delay was unintentional by any party; rather, the issue is whether the entire delay has been shown to the satisfaction of the Director to be unintentional.

The question under 37 CFR 1.137(b) for period (1) is whether the delay on the part of the party having the right or authority to reply to avoid abandonment (or not reply) was unintentional. Accordingly, any renewed petition must clearly identify the party having the right to reply to avoid abandonment on November 27, 2005. That party, in turn must explain what effort(s) was made to further reply to the outstanding Office action and, further, why no reply was filed. If no effort was made to further reply, then that party must explain why the delay in this application does not result from a deliberate course of action (or inaction). Copies of any correspondence relating to the filing, or to not filing a further reply to the outstanding Office action are required from any and all responsible person(s) having firsthand knowledge of the circumstances surrounding the lack of a reply to the outstanding Office action. As the courts have made clear, it is pointless for the USPTO to revive a long abandoned application without an adequate showing that the delay did not result from a deliberate course of action. *See* Lawman Armor v. Simon, 2005 U.S. Dist. LEXIS 10843, 74 USPQ2d 1633 (DC EMich 2005); Field Hybrids, LLC v. Toyota Motor Corp., 2005 U.S. Dist. LEXIS 1159 (D. Minn Jan. 27, 2005); Lumenyte Int'l Corp. v. Cable Lite Corp., Nos. 96-1011, 96-1077, 1996 U.S. App. LEXIS 16400, 1996 WL 383927 (Fed. Cir. July 9, 1996) (unpublished) (patents held unenforceable due to a finding of inequitable conduct in submitting an inappropriate statement that the abandonment was unintentional).

As to Period (2):

Likewise, where the applicant deliberately chooses not to seek or persist in seeking the revival of an abandoned application, or where the applicant deliberately chooses to delay seeking the revival of an abandoned application, the resulting delay in seeking revival of the abandoned application cannot be considered as "unintentional" within the meaning of 37 CFR 1.137(b). *See* MPEP 711.03(c).

The language of both 35 U.S.C. § 41(a)(7) and 37 CFR 1.137(b) are clear and unambiguous, and, furthermore, without qualification. That is, the delay in filing the reply during prosecution, as well as in filing the petition seeking revival, must have been,

without qualification, "unintentional" for the reply to now be accepted on petition. The Office requires that the entire delay be at least unintentional as a prerequisite to revival of an abandoned application to prevent abuse and injury to the public. *See* H.R. Rep. No. 542, 97th Cong., 2d Sess. 7 (1982), reprinted in 1982 U.S.C.C.A.N. 771 ("[i]n order to prevent abuse and injury to the public the Commissioner . . . could require applicants to act promptly after becoming aware of the abandonment"). The December 1997 change to 37 CFR 1.137 did not create any new right to overcome an intentional delay in seeking revival, or in renewing an attempt at seeking revival, of an abandoned application. *See* Changes to Patent Practice and Procedure; Final Rule Notice, 62 Fed. Reg. 53131, 53160 (October 10, 1997), 1203 Off. Gaz. Pat. Office 63, 87 (October 21, 1997), which clearly stated that any protracted delay (here, over four years) could trigger, as here, a request for additional information. As the courts have since made clear, a protracted delay in seeking revival, as here, requires a petitioner's detailed explanation seeking to excuse the delay as opposed to USPTO acceptance of a general allegation of unintentional delay. *See* Lawman Armor v. Simon, 2005 U.S. Dist. LEXIS 10843, 74 USPQ2d 1633, at 1637-8 (DC EMich 2005); Field Hybrids, LLC v. Toyota Motor Corp., 2005 U.S. Dist. LEXIS 1159 (D. Minn Jan. 27, 2005) at *21-*23. Statements are required from any and all responsible person(s) having firsthand knowledge of the circumstances surrounding the protracted delay, after the abandonment date, in seeking revival.

As noted in MPEP 711.03(c)(II), subsection D, in instances in which such petition was not filed within 1 year of the date of abandonment of the application, applicants should include:

> (A) the date that the applicant first became aware of the abandonment of the application; and
> (B) a showing as to how the delay in discovering the abandoned status of the application occurred despite the exercise of due care or diligence on the part of the applicant.

In either instance, applicant's failure to carry the burden of proof to establish that the "entire" delay was "unavoidable" or "unintentional" may lead to the denial of a petition under 37 CFR 1.137(b), regardless of the circumstances that originally resulted in the abandonment of the application. *See also* New York University v. Autodesk, 2007 U.S. DIST LEXIS, U.S.District LEXIS 50832, *10 -*12 (S.D.N.Y. 2007)(protracted delay in seeking revival undercuts assertion of unintentional delay).

Further correspondence with respect to this matter should be delivered through one of the following mediums:

By mail: Mail Stop PETITIONS
Commissioner for Patents
Post Office Box 1450
Alexandria, VA 22313-1450

By hand: Customer Service Window
Mail Stop Petitions
Randolph Building
401 Dulany Street
Alexandria, VA 22314

By fax: (571) 273-8300
ATTN: Office of Petitions

By Internet: EFS-Web[1]

Any questions concerning this matter may be directed to the undersigned at (571) 272-3204.

Sherry D. Brinkley
Petitions Examiner
Office of Petitions

[1] www.uspto.gov/ebc/efs_help.html (for help using EFS-Web call the Patent Electronic Business Center at (866) 217-9197)

UNITED STATES PATENT AND TRADEMARK OFFICE

Commissioner for Patents
United States Patent and Trademark Office
P.O. Box 1450
Alexandria, VA 22313-1450
www.uspto.gov

COPY MAILED

OCT 24 2006

OFFICE OF PETITIONS

Cooley Godward Kronish LLP
Attn: Patent Group
The Bowen Building
875 15th Street, N.W., Suite 800
Washington DC 20005-2221

In re Application of :
James Danial Theall et al. :
Application No. 10/712,397 : DECISION ON PETITION
Filed: November 14, 2003 : TO WITHDRAW
Attorney Docket No. MDIA-001/00US : FROM RECORD
:

This is a decision on the Request to Withdraw as attorney or agent of record under 37 C.F.R. § 1.36(b), filed July 17, 2006.

The request is **NOT APPROVED**.

A grantable request to withdraw as attorney/agent of record must be signed by every attorney/agent seeking to withdraw or contain a clear indication that one attorney is signing on behalf of another/others. A request to withdraw will not be approved unless at least 30 (thirty) days would remain between the date of approval and the later of the expiration date of a time to file a response or the expiration date of the maximum time period which can be extended under 37 C.F.R. § 1.136(a).

The request cannot be approved because no reasons for withdrawal have been provided. The Office cannot, at this time, determine whether practitioner's request is one of the mandatory or permissive reasons enumerated in 37 CFR 10.40. Any subsequent requests must include reasons for withdrawal. Please note that there is a space provided for on PTO/SB/83 (Request to Withdraw as Attorney or Agent) to supply practitioner's reasons.

All future communications from the Office will continue to be directed to the above-listed address until otherwise notified by applicant.

Telephone inquiries concerning this decision should be directed to Terri Williams at 571-272- 2991.

David Bucci
Petitions Examiner
Office of Petitions

cc: **James Theall**
6859 North Foothills Highway
Boulder, CO 80302

UNITED STATES PATENT AND TRADEMARK OFFICE

Commissioner for Patents
United States Patent and Trademark Office
P.O. Box 1450
Alexandria, VA 22313-1450
www.uspto.gov

GLENNA HENDRICKS, ESQ.
P.O. BOX 2509
FAIRFAX, VA 22031-2509

COPY MAILED

OCT 31 2007

OFFICE OF PETITIONS

In re Application of :
James W. Lillard, Jr., et al. :
Application No. 10/712,398 : DECISION ON PETITION
Filed: November 14, 2003 :
Attorney Docket No. :

This is a decision on the petition under the unintentional provisions of 37 CFR 1.137(b), filed June 14, 2007, to revive the above-identified application.

The petition is **GRANTED**.

The application became abandoned for failure to reply in a timely manner to the Restriction Requirement, mailed July 14, 2006, which set a shortened statutory period for reply of one (1) month or thirty (30) days (whichever is later). No extensions of time under the provisions of 37 CFR 1.136(a) were obtained. Accordingly, the application became abandoned on August 15, 2006.

The petition satisfies the requirements of 37 CFR 1.137(b) in that petitioner has supplied (1) the reply in the form of an election, (2) the petition fee of $750, and (3) a proper statement of unintentional delay.

Telephone inquiries concerning this decision should be directed to undersigned at (571) 272-1642.

This application is being referred to Technology Center AU 1642 for appropriate action by the Examiner in the normal course of business on the reply received June 14, 2007.

April M. Wise
Petitions Examiner
Office of Petitions

UNITED STATES PATENT AND TRADEMARK OFFICE

Commissioner for Patents
United States Patent and Trademark Office
P.O. Box 1450
Alexandria, VA 22313-1450
www.uspto.gov

GLENNA HENDRICKS, ESQ.
P.O. BOX 2509
FAIRFAX VA 22031-2509

MAILED

SEP 29 2009

OFFICE OF PETITIONS

In re Application of
James W. Lillard, et al
Application No. 10/712,398
Filed: November 14, 2003
For: ANTI-CHEMOKINE AND ASSOCIATED RECEPTORS ANTIBODIES FOR INHIBITION OF GROWTH OF NEOPLASMS

DECISION ON PETITION

This is a decision on the petition under the unintentional provisions of 37 CFR 1.137(b), filed July 28, 2009, to revive the above-identified application.

The petition is **GRANTED**.

The petition satisfies the conditions for revival pursuant to the provisions of 37 CFR 1.137(b) in that (1) the reply in the form of an amendment; (2) the petition fee; and (3) the required statement of unintentional delay have been received. Accordingly, the reply to the nonfinal rejection mailed July 9, 2008, is accepted as having been unintentionally delayed.

Telephone inquiries concerning this decision should be directed to the undersigned at (571) 272-3208.

This application is being referred to Technology Center AU 1642 for appropriate action by the Examiner in the normal course of business on the reply received July 28, 2009.

/KOC/
Karen Creasy
Petitions Examiner
Office of Petitions

UNITED STATES PATENT AND TRADEMARK OFFICE

Commissioner for Patents
United States Patent and Trademark Office
P.O. Box 1450
Alexandria, VA 22313-1450
www.uspto.gov

MARTINE & PENILLA, LLP
710 LAKEWAY DRIVE
SUITE 170
SUNNYVALE CA 94085

COPY MAILED

SEP 0 8 2004

OFFICE OF PETITIONS

In re Application of :
Makoto Fujino :
Application No. 10/712,402 : ON PETITION
Filed: November 12, 2003 :
Attorney's Docket No. MIPFP064 :

This is a decision on the request for a corrected filing receipt filed July 30, 2004, which is treated as a petition under 37 CFR 1.10.

The petition is **DISMISSED** as involving moot issues.

Petitioners request that the filing date be corrected to November 12, 2003, as the date that the application was deposited in Express Mail service.

A review of Office PALM records indicates that the application is presently accorded a filing date of November 12, 2003. The petition is therefore dismissed as moot. A copy of a corrected filing receipt accompanies this decision.

The file is being forwarded to Technology Center 2622 for examination in due course.

Telephone inquiries concerning this matter may be directed to the undersigned Petitions Attorney at (703) 305-4497.

Patricia Faison-Ball

Patricia Faison-Ball
Senior Petitions Attorney
Office of Petitions

Attachment: Official Filing Receipt

31 MAR 2004

UNITED STATES PATENT AND TRADEMARK OFFICE

COMMISSIONER FOR PATENTS
UNITED STATES PATENT AND TRADEMARK OFFICE
P.O. BOX 1450
ALEXANDRIA, VA 22313-1450
www.uspto.gov

Monique Perdok
Schwegman Lundberg, Woessner & Kluth, P.A.
P.O. Box 2938
Minneapolis, MN 55402

In re Application of :
UHRICH et al. :
U.S. Application No.: 10/712,416 : DECISION ON PETITION
Filing Date: 10 November 2003 : UNDER 37 CFR 1.137(b)
Attorney Docket No.: 1435.010US3 :
For: THERAPEUTIC AZO-COMPOUNDS FOR DRUG: DELIVERY

This decision is in response to applicant's "Petition to Revive" filed 10 November 2003 in the United States Patent and Trademark Office (USPTO).

BACKGROUND

On 27 July 2001, applicant filed international application PCT/US01/23748 which claimed priority of an earlier application filed 27 July 2000. Pursuant to 37 CFR 1.495, the deadline for payment of the basic national fee in the United States was to expire 30 months from the priority date, 27 January 2003.

On 10 November 2003, applicant filed the present petition to revive pursuant to 37 CFR 1.137(b) accompanied by a continuation application.

DISCUSSION

A petition under 37 CFR 1.137(b) requesting that the application be revived on the grounds of unintentional abandonment must be accompanied by (1) the required reply, (2) the petition fee required by law, (3) a statement that the, "entire delay in filing the required reply from the due date for the reply until the filing of a grantable petition pursuant to this paragraph was unintentional" and (4) any terminal disclaimer and fee pursuant to 37 CFR 1.137(c) (where required).

Regarding item (1), applicant has supplied the proper reply in the form of the filing of a continuation application.

As to item (2), applicant authorized deduction of the required petition fee to Deposit Account No.: 19-0743 thus satisfying item (2).

Regarding item (3), applicant's statement that, "Abandonment of the international application was unintentional and the entire delay in filing the U.S. national stage application was also unintentional" satisfies this element.

As to Item (4), the terminal disclaimer is not required since this application was filed after 08 June 1995.

CONCLUSION

Applicant's petition to revive for the purposes of continuity only is **GRANTED**.

International application PCT/US01/23748 is being revived for purposes of continuity only and since continuity has been established by this decision reviving the international application, the international application is again abandoned.

This application is being forwarded to the United States Designated/Elected Office for continued processing. The application will the be forwarded to Office of Initial Patent Examination for continued processing as a regular national application under 35 U.S.C. 111(a).

Anthony Smith
Attorney-Advisor
Office of PCT Legal Administration
Tel.: 703-308-6314
Facsimile: 703-308-6459

UNITED STATES PATENT AND TRADEMARK OFFICE

Commissioner for Patents
United States Patent and Trademark Office
P.O. Box 1450
Alexandria, VA 22313-1450
www.uspto.gov

MONIQUE SHONKA
SCHWEGMAN, LUNDBERG & WOESSNER, P.A.
P.O. BOX 2938
MINNEAPOLIS, MN 55402

COPY MAILED

MAY 27 2009

OFFICE OF PETITIONS

In re Application of	:	
Kathryn E. Uhrich	:	DECISION ON PETITION
Application No. 10/712,416	:	TO WITHDRAW
Filed: November 10, 2003	:	FROM RECORD
Attorney Docket No. 1435.010US3	:	

This is a decision on the Request to Withdraw as attorney or agent of record under 37 C.F.R. § 1.36(b), filed March 24, 2006.

The request is **NOT APPROVED** because it is moot.

A review of the file record indicates that on May 1, 2006 the power of attorney to Schwegman, Lundberg & Woessner, P.A. was revoked by the assignee of the patent application. Accordingly, the request to withdraw under 37 C.F.R. § 1.36(b) is moot.

All future communications from the Office will be directed to the below-listed address until otherwise notified by applicant.

Telephone inquires concerning this decision should be directed to the undersigned at 571-272- 7751. All other inquires concerning either the examination or status of the application should be directed to the Technology Center.

Joan Olszewski

Joan Olszewski
Petitions Examiner
Office of Petitions

cc: Viksnins Harris & Padys PLLP
P.O. Box 111098
St. Paul MN 55111-1098

UNITED STATES PATENT AND TRADEMARK OFFICE

Commissioner for Patents
United States Patent and Trademark Office
P.O. Box 1450
Alexandria, VA 22313-1450
www.uspto.gov

AUG 3 2005

FISH & NEAVE IP GROUP
ROPES & GRAY LLP
ONE INTERNATIONAL PLACE
BOSTON MA 02110-2624

In re Application of :	:
Lee et al.	:
Serial No.: 10/712,425	: PETITION TO MAKE SPECIAL
Filed: November 13, 2003	:
Attorney Docket No.: ENGE-P02-001	:

This is in response to applicants' petition filed July 25, 2005, to make the above-identified application special under the provisions of 37 CFR 1.102(d), based on applicants who are small entities having applications relating to biotechnology.

Applicants have satisfied the provisions set forth in M.P.E.P. 708.02, XII (A), (B), and (C). The $130.00 petition fee as required by 37 CFR 1.17(h) was charged to applicant's Deposit Account No. 18-1945, as authorized. Therefore, the petition is **GRANTED**.

Should there be any questions with regard to this letter please contact Marianne C. Seidel by letter addressed to the Director, Technology Center 1600, PO BOX 1450, ALEXANDRIA, VA 22313-1450, or by telephone at 571-272-0584 or by facsimile transmission to the general Office facsimile number.

Marianne C. Seidel
Special Program Examiner
Technology Center 1600

UNITED STATES PATENT AND TRADEMARK OFFICE

COMMISSIONER FOR PATENTS
UNITED STATES PATENT AND TRADEMARK OFFICE
P.O. BOX 1450
ALEXANDRIA, VA 22313-1450
www.uspto.gov

DOV ROSENFELD
5507 COLLEGE AVE
SUITE 2
OAKLAND, CA 94618

COPY MAILED

JUL 10 2006

OFFICE OF PETITIONS

In re Application of
Yves R. Joskin, et al.
Application No. 10/712,428
Filed: November 12, 2003
Attorney Docket No. EUR-101

DECISION GRANTING PETITION
UNDER 37 CFR 1.137(b)

This is a decision on the petition, filed January 27, 2006, under 37 CFR 1.137(b) to revive the instant nonprovisional application for failure to timely notify the U.S. Patent and Trademark (USPTO) of the filing of an application in a foreign country, or under a multinational treaty that requires publication of applications eighteen months after filing. *See* 37 CFR 1.137(f).

The petition is **GRANTED**.

Petitioner states that the instant nonprovisional application is the subject of an application filed in an eighteen month publication country on October 15, 2004. However, the USPTO was unintentionally not notified of this filing within 45 days subsequent to the filing of the subject application in an eighteen month publication country.

In view of the above, this application became abandoned pursuant to 35 U.S.C. §122(b)(2)(B)(iii) and 37 CFR 1.213(c) for failure to timely notify the Office of the filing of an application in a foreign country or under a multilateral international agreement that requires publication of applications 18 months after filing.

A petition to revive an application abandoned pursuant to 35 U.S.C. § 122(b)(2)(B)(iii) for failure to notify the USPTO of a foreign filing must be accompanied by:

(1) the required reply which is met by the notification of such filing in a foreign country or under a multinational treaty;
(2) the petition fee as set forth in 37 CFR 1.17(m); and
(3) a statement that the entire delay in filing the required reply from the due date of the reply until the filing of a grantable petition was unintentional.

The petition has been found to be in compliance with 37 CFR 1.137(b). Accordingly, the failure to timely notify the USPTO of a foreign or international filing within 45 days after the date of filing of such foreign or international application as provided by 35 U.S.C. § 122(b)(2)(B)(iii) and 37 CFR 1.213(c) is accepted as having been unintentionally delayed.

The previous Request and Certification under 35 U.S.C. § 122(b)(2)(B)(i) has been rescinded. A Notice Regarding Rescission of Nonpublication Request which sets forth the projected publication date of October 19, 2006 accompanies this decision on petition.

Any inquiries concerning this decision may be directed to the undersigned at (571) 272-3204.

This application is being referred to Technology Center Art Unit 2622.

Sherry D. Brinkley
Petitions Examiner
Office of Petitions

ATTACHMENT: Notice Regarding Rescission of Nonpublication Request

UNITED STATES PATENT AND TRADEMARK OFFICE

UNITED STATES DEPARTMENT OF COMMERCE
United States Patent and Trademark Office
Address: COMMISSIONER FOR PATENTS
P.O. Box 1450
Alexandria, Virginia 22313-1450
www.uspto.gov

APPLICATION NUMBER	FILING/RECEIPT DATE	FIRST NAMED APPLICANT	ATTY. DOCKET NO.
10/712,428	11/12/2003	Yves R. Joskin	EUR-101

CONFIRMATION NO. 9950

21921
DOV ROSENFELD
5507 COLLEGE AVE
SUITE 2
OAKLAND, CA 94618

Date Mailed: 07/07/2006

Communication Regarding Rescission Of Nonpublication Request and/or Notice of Foreign Filing

Applicant's rescission of the previously-filed nonpublication request and/or notice of foreign filing is acknowledged. The paper has been reflected in the Patent and Trademark Office's (USPTO's) computer records so that the earliest possible projected publication date can be assigned.

The projected publication date is 10/19/2006.

If applicant rescinded the nonpublication request before or on the date of "foreign filing,"[1] then no notice of foreign filing is required.

If applicant foreign filed the application after filing the above application and before filing the rescission, and the rescission did not also include a notice of foreign filing, then a notice of foreign filing (not merely a rescission) is required to be filed within 45 days of the date of foreign filing. See 35 U.S.C. § 122(b)(2)(B)(iii), and Clarification of the United States Patent and Trademark Office's Interpretation of the Provisions of 35 U.S.C. § 122(b)(2)(B)(ii)-(iv), 1272 Off. Gaz. Pat. Office 22 (July 1, 2003).

If a notice of foreign filing is required and is not filed within 45 days of the date of foreign filing, then the application becomes abandoned pursuant to 35 U.S.C. § 122(b)(2)(B)(iii). In this situation, applicant should either file a petition to revive or notify the Office that the application is abandoned. See 37 CFR 1.137(f). Any such petition to revive will be forwarded to the Office of Petitions for a decision. Note that the filing of the petition will not operate to stay any period of reply that may be running against the application.

Questions regarding petitions to revive should be directed to the Office of Petitions at (571) 272-3282. Questions regarding publications of patent applications should be directed to the patent application publication hotline at (703) 605-4283 or by e-mail pgpub@uspto.gov.

[1] Note, for purpose of this notice, that "foreign filing" means "filing an application directed to the same invention in another country, or under a multilateral international agreement, that requires publication of applications 18 months after filing".

UNITED STATES PATENT AND TRADEMARK OFFICE

UNITED STATES DEPARTMENT OF COMMERCE
United States Patent and Trademark Office
Address: COMMISSIONER FOR PATENTS
P.O. Box 1450
Alexandria, Virginia 22313-1450
www.uspto.gov

Ballard Spahr LLP
SUITE 1000
999 PEACHTREE STREET
ATLANTA, GA 30309-3915

Mail Date: 04/21/2010

Applicant	: Gattadahalli M. Anantharamiah	: DECISION ON REQUEST FOR
Patent Number	: 7563771	: RECALCULATION of PATENT
Issue Date	: 07/21/2009	: TERM ADJUSTMENT IN VIEW
Appliction No	: 10/712,447	: OF WYETH
Filed	: 11/13/2003	:
		:

The Patentee's Request for Recalculation is **DISMISSED.**

This Request is deemed ineligible for consideration for one or more of the following reasons:

(A). The patent for which PTA recalculation is requested is either a design or reissue application or is a reexamination proceeding;

(B). The patent for which PTA recalculation is requested resulted from a utility or plant application filed under 35 USC 111(a) before May 29, 2000 and no CPA filed in the application on/after May 29, 2000;

(C). The patent for which PTA recalculation is requested resulted from an international application in which the international filing date was before May 29, 2000 and no CPA filed in the application on/after May 29, 2000;

(D). The patent for which PTA recalculation is requested issued on/after March 2, 2010;

(E). The Request for Recalculation was filed more than 180 days after the grant date of the patent and the request was not filed within two months of a dismissal of a request for reconsideration of the of the patent term under 37 CFR 1.705(d);

(F). The Request for Recalculation is not solely limited to USPTO pre-Wyeth interpretation of 35 U.S.C. 154(b)(2)(A);

or

(G). A civil action was filed pursuant to 35 U.S.C. 154(b)(4)(A)concerning the same patent at issue in this request.

Patentee may file a reply to this decision dismissing the Request for Recalculation. Patentee must file such reply within one month or thirty days, whichever is longer, of the mail date of the decision dismissing the Request for Recalculation. No fee is required if patentee is asserting in the reply that the dismissal for ineligibility is improper.

Patentee should use document code PET.OP if electronically filing a reply to this dismissal. If the USPTO finds that the request was improperly deemed ineligible, the USPTO will mail applicant a recalculation determination.

Patentee should be aware that in order to preserve the right to review in the United States District Court for the District of Columbia of the USPTO patent term adjustment determination, patentee must ensure that he or she also take the steps required under 35 U.S.C. 154(b)(4)(A). Nothing in the request for recalculation should be construed as providing an alternative time frame for commencing a civil action under 35 U.S.C. 154 (b)(4)(A).

Any questions concerning this decision should be directed to the Office of Patent Legal Administration at 571-272-7702.

UNITED STATES PATENT AND TRADEMARK OFFICE

COMMISSIONER FOR PATENTS
UNITED STATES PATENT AND TRADEMARK OFFICE
P.O. BOX 1450
ALEXANDRIA, VA 22313-1450
www.uspto.gov

MICHAEL BEST & FRIEDRICH, LLP
100 E WISCONSIN AVENUE
MILWAUKEE WI 53202

COPY MAILED

JUN 10 2005

OFFICE OF PETITIONS

In re Application of :
Stephen M. Floyd, et al. :
Application No. 10/712,459 : ON PETITION
Filed: November 13, 2003 :
Attorney Docket No. 031383-9088 :

This is a decision on the petition, filed June 6, 2005, under 37 CFR 1.313(c)(2) to withdraw the above-identified application from issue after payment of the issue fee.

The petition is **GRANTED**.

The above-identified application is withdrawn from issue for consideration of a submission under 37 CFR 1.114 (request for continued examination). See 37 CFR 1.313(c)(2).

Petitioner is advised that the issue fee paid on May 19, 2005, in the above-identified application cannot be refunded. If, however, the above-identified application is again allowed, petitioner may request that it be applied towards the issue fee required by the new Notice of Allowance. [1]

Telephone inquiries relating to this decision should be directed to the undersigned at (571) 272-3204.

The application is being referred to Technology Center AU 3746` for further processing of the request for continued examination under 37 CFR 1.114.

Sherry D. Brinkley
Petitions Examiner
Office of Petitions
Office of the Deputy Commissioner
for Patent Examination Policy

[1]The request to apply the issue fee to the new Notice may be satisfied by completing and returning the new Issue Fee Transmittal Form PTOL-85(b), which includes the following language thereon: "Commissioner for Patents is requested to apply the Issue Fee and Publication Fee (if any) or re-apply any previously paid issue fee to the application identified above." Petitioner is advised that, whether a fee is indicated as being due or not, the Issue Fee Transmittal Form must be completed and timely submitted to avoid abandonment. Note the language in bold text on the first page of the Notice of Allowance and Fee(s) Due (PTOL-85).

UNITED STATES PATENT AND TRADEMARK OFFICE

COMMISSIONER FOR PATENTS
UNITED STATES PATENT AND TRADEMARK OFFICE
P.O. BOX 1450
ALEXANDRIA, VA 22313-1450
WWW.USPTO.GOV

Paper No. None

TOWNSEND AND TOWNSEND AND CREW LLP / AMAT
TWO EMBARCADERO CENTER
EIGHTH FLOOR
SAN FRANCISCO CA 94111-3834

COPY MAILED
JUL 24 2006
OFFICE OF PETITIONS

In re Application of :
Won B. Bang et al. :
Application No. 10/712,464 : DECISION ON PETITION UNDER
Filed: November 12, 2003 : 37 C.F.R. §1.181(A)
Attorney Docket Number: :
A7695/T51600 :
Title: RAMP TEMPERATURE :
TECHNIQUES FOR IMPROVED MEAN :
WAFER BEFORE CLEAN :

This is a decision on the petition under 37 C.F.R §1.181(a), filed April 5, 2006, to withdraw the holding of abandonment.

The above-identified application became abandoned for failure to submit the issue and publication fees in a timely manner in reply to the Notice of Allowance and Issue Fee Due, mailed November 8, 2005, which set a shortened statutory period for reply of three (3) months. No extensions of time are permitted for transmitting issue or publication fees[1]. Accordingly, the above-identified application became abandoned on February 9, 2006. A Notice of Abandonment was mailed on March 28, 2006.

With the present petition, Petitioner has submitted the issue and publication fees, along with an assertion that he did indeed submit the issue fee in a timely manner. Petitioner has included a copy of the issue fee transmittal form PTOL-85B, which contains an authorization to charge Deposit Account 50-1074, as well as a certificate of facsimile transmission dated February 7, 2006.

The electronic file has been reviewed, and a copy of this same PTOL-85B form has been located, and it is clear that this form was received on February 8, 2006.

1 See MPEP §710.02(e).

However, the electronic file also contains a Notice of Fee Due, and indicates that on February 8, 2006, Deposit Account 50-1074 contained a balance of $101. As such, it would appear that Petitioner failed to replenish his Deposit Account in a timely manner, and the same contained insufficient funds to cover the issue and publication fees for the present application.

Therefore, the petition must be **DISMISSED.**

Any reply must be submitted within **TWO (2) MONTHS** from the mail date of this decision. Extensions of time under 37 C.F.R. §1.136(a) are permitted. The reply should include a cover letter entitled "Renewed Petition Under 37 C.F.R. §1.181." This is not a final agency action within the meaning of 5 U.S.C 704.

The renewed petition should indicate in a prominent manner that the attorney handling this matter is Paul Shanoski, and may be submitted by mail[2], hand-delivery[3], or facsimile[4].

Petitioner may wish to consider filing a petition under 37 C.F.R. §§1.137(a) or (b). No assurance can be made that any remedy will be forthcoming.

Telephone inquiries regarding *this decision* should be directed to the undersigned at (571) 272-3225. All other inquiries concerning examination procedures or status of the application should be directed to the Technology Center.

Paul Shanoski
Senior Attorney
Office of Petitions
United States Patent and Trademark Office

2 Mail Stop Petition, Commissioner for Patents, United States Patent and Trademark Office, P.O. Box 1450, Alexandria, VA, 22313-1450.
3 Customer Window, Randolph Building, 401 Dulaney Street, Alexandria, VA, 22314.
4 (571) 273-8300- please note this is a central facsimile number.

UNITED STATES PATENT AND TRADEMARK OFFICE

COMMISSIONER FOR PATENTS
UNITED STATES PATENT AND TRADEMARK OFFICE
P.O. BOX 1450
ALEXANDRIA, VA 22313-1450
WWW.USPTO.GOV

Paper No. None

TOWNSEND AND TOWNSEND AND CREW LLP / AMAT
TWO EMBARCADERO CENTER
EIGHTH FLOOR
SAN FRANCISCO CA 94111-3834

COPY MAILED

MAR 0 5 2007

OFFICE OF PETITIONS

In re Application of :
Won B. Bang et al. :
Application No. 10/712,464 : DECISION ON PETITION
Filed: November 12, 2003 : PURSUANT TO 37 C.F.R.
Attorney Docket Number: : §1.137(B)
A7695/T51600 :
Title: RAMP TEMPERATURE :
TECHNIQUES FOR IMPROVED MEAN :
WAFER BEFORE CLEAN :

This is a decision on the petition filed September 14, 2006, pursuant to 37 C.F.R. §1.137(b)[1], to revive the above-identified application.

The above-identified application became abandoned for failure to submit the issue and publication fees in a timely manner in reply to the Notice of Allowance and Issue Fee Due, mailed November 8, 2005, which set a shortened statutory period for reply of three months. No extensions of time are permitted for transmitting issue or publication fees[2]. Accordingly, the above-

1 A grantable petition pursuant to 37 C.F.R. §1.137(b) must be accompanied by:

(1) The reply required to the outstanding Office action or notice, unless previously filed;
(2) The petition fee as set forth in § 1.17(m);
(3) A statement that the entire delay in filing the required reply from the due date for the reply until the filing of a grantable petition pursuant to this paragraph was unintentional. The Commissioner may require additional information where there is a question whether the delay was unintentional, and;
(4) Any terminal disclaimer (and fee as set forth in § 1.20(d)) required pursuant to paragraph (d) of this section.

2 See MPEP §710.02(e).

identified application became abandoned on February 9, 2006. A Notice of Abandonment was mailed on March 28, 2006.

A petition pursuant to 37 C.F.R §1.181(a) was filed on April 5, 2006, along with the issue fee, the publication fee, and a copy of the issue fee transmittal form PTOL-85B. This petition was dismissed via the mailing of a decision on July 24, 2006.

Along with the present petition, Petitioner's representative has included the proper statement of unintentional delay. No terminal disclaimer is required.

As such, the petition under 37 C.F.R. §1.137(b) is **GRANTED**.

The Office of Patent Publication will be notified of this decision so that the present application can be processed into a patent.

Telephone inquiries regarding *this decision* should be directed to the undersigned at (571) 272-3225[3]. All other inquiries concerning the status of the application should be directed to the Office of Patent Publication at 571-272-4200.

Paul Shanoski
Senior Attorney
Office of Petitions
United States Patent and Trademark Office

---

3 Petitioner's representative will note that all practice before the Office should be in writing, and the action of the Office will be based exclusively on the written record in the Office. See 37 C.F.R. §1.2. As such, Petitioner's representative is reminded that no telephone discussion may be controlling or considered authority for any further action(s) of Petitioner's representative.

UNITED STATES PATENT AND TRADEMARK OFFICE

COMMISSIONER FOR PATENTS
UNITED STATES PATENT AND TRADEMARK OFFICE
P.O. BOX 1450
ALEXANDRIA, VA 22313-1450
www.uspto.gov

MARY Y. REDMAN
MEDTRONIC, INC.
710 MEDTRONIC PARKWAY NE M.S. LC340
MINNEAPOLIS, MN 55432-5604

COPY MAILED

AUG 14 2007

OFFICE OF PETITIONS

In re Application of :
CHAPMAN et al :
Application No.: 10/712,469 : DECISION ON PETITION
Filing Date: November 12, 2003 : UNDER 37 CFR 1.137(B)
Attorney Docket No.: P10057.00 :

This is a decision on the petition under 37 CFR 1.137(b), filed June 15, 2007, to revive the above-identified application.

The petition is **GRANTED.**

The above-identified application became abandoned for failure to submit the issue fee in a timely manner in reply to the Notice of Allowance mailed January 12, 2007, which set a statutory period for reply of three (3) months. Accordingly, by operation of law, the above-identified application became abandoned on April 13, 2007.

The petition satisfies the conditions for revival pursuant to the provisions of 37 CFR 1.137(b) in that (1) the reply in the form of payment of the issue fee; (2) the petition fee; and (3) the required statement of unintentional delay have been received. Accordingly, the payment of the issue fee is accepted as having been unintentionally delayed.

This application is being referred to the Office of Publications.

Telephone inquiries concerning this decision should be directed to the undersigned at (571) 272-3303.

Bryan Lin

Bryan Lin
Legal Examiner
Office of the Deputy Commissioner
for Patent Examination Policy

SPE RESPONSE FOR CERTIFICATE OF CORRECTION

Paper No.: _____

DATE : 05/13/06

TO SPE OF : ART UNIT 2832

SUBJECT : Request for Certificate of Correction for Appl. No.: **10/712484** Patent No.: **7026908**

Please respond to this request for a certificate of correction within 7 days.

Please review the requested changes/corrections as shown in the **COCIN** document(s) in the IFW application image. No new matter should be introduced, nor should the scope or meaning of the claims be changed.

Please complete the response (see below) and forward the completed response to scanning using document code **COCX**.

Certificates of Correction Branch

703-308-9390 ext. 123

Thank You For Your Assistance

The request for issuing the above-identified correction(s) is hereby:

Note your decision on the appropriate box.

- ☐ **Approved** — **All** changes apply.
- ☐ **Approved in Part** — Specify below which changes **do not** apply.
- ☒ **Denied** — State the reasons for denial below.

Comments: PTA is correct; Cert C is not appropriate to correct PTA.

SPE **Art Unit**

UNITED STATES PATENT AND TRADEMARK OFFICE

Commissioner for Patents
United States Patent and Trademark Office
P.O. Box 1450
Alexandria, VA 22313-1450
www.uspto.gov

Date Mailed : September 10, 2007

Patent No. : 7026908
Inventor : Samir W. Habboosh
Patent Issued : April 11, 2006
Title : EXTENDED TEMPERATURE RANGE THERMAL VARIABLE-RESISTANCE DEVICE

Re: Request for Certificate of Correction

Consideration has been given your request for the issuance of a certificate of correction for the above-identified patent under the provisions of Rule(s) 1.322.

Inspection of the application for the patent reveals that in connection with the alleged error pertaining to applicants request regarding PTA data; PTA data is printed in accordance with the records in the Patent and Trademark Office. There being no fault on the part of the Patent and Trademark Office, it has no authority to a issue certificate of correction under the provisions of 35 U.S.C. 254 and Rule 322 of the Rules of Practice of the United States Patent and Trademark Office in Patent Cases.

In view of the foregoing applicants request in this matter is hereby denied.

Any telephone inquiry concerning this communication should be directed to Ms. A. Green at (703) 308-9380 ext. 123.

for Cecelia Newman
Decisions & Certificates
of Correction Branch
(703) 308-9390 or (703) 308- 9380 ext. 123

Wesley W. Whitmyer, Jr., Esquire
St. Onge Steward Johnston & Reens LLC
986 Bedford Street
Stamford, Connecticut 06905-5619

CBN/arg

SPE RESPONSE FOR CERTIFICATE OF CORRECTION

DATE : 4/4/06 7/25/06

Paper No.: ---

TO SPE OF : ART UNIT 3711

SUBJECT : Request for Certificate of Correction for Appl. No.: 10/712501 Patent No.: 6969928

Please respond to this request for a certificate of correction within 7 days.

Please review the requested changes/corrections as shown in the **COCIN** document(s) in the IFW application image. No new matter should be introduced, nor should the scope or meaning of the claims be changed.

Please complete the response (see below) and forward the completed response to scanning using document code **COCX**.

Virginia Tolbert

Certificates of Correction Branch

703-308-9390 ext. 113

Thank You For Your Assistance

The request for issuing the above-identified correction(s) is hereby:

Note your decision on the appropriate box.

☒ **Approved**	**All** changes apply.
☐ **Approved in Part**	Specify below which changes **do not** apply.
☐ **Denied**	State the reasons for denial below.

Comments: The added claim language does not change the scope of the claims.

SPE Art Unit

UNITED STATES PATENT AND TRADEMARK OFFICE

Commissioner for Patents
United States Patent and Trademark Office
P.O. Box 1450
Alexandria, VA 22313-1450
www.uspto.gov

CHARLES J. PRESCOTT, P.A.
SUITE 115
2033 WOOD STREET
SARASOTA FL 34237

COPY MAILED

MAR 14 2007

OFFICE OF PETITIONS

In re Application of :
Phillip C. Schultz :
Application No. 10/712,501 : DECISION ON PETITION
Filed: November 13, 2003 : TO MAKE SPECIAL UNDER
Attorney Docket No. 6048P2730 : 37 CFR 1.102(c)(1)
:

This is a decision on the petition under 37 CFR 1.102(c)(1), filed December 26, 2006, to make the above-identified application special based on applicant's age as set forth in M.P.E.P. § 708.02, Section IV.

The petition is **DISMISSED** as moot.

A grantable petition to make an application special under 37 CFR 1.102(c)(1) and MPEP § 708.02, Section IV: Applicant's Age, must be accompanied by evidence showing that at least one of the applicants is 65 years of age, or more, such as a birth certificate or a statement by applicant. No fee is required.

This application is already patented. The Special status only applies to pending applications.

Further correspondence with respect to this matter should be addressed as follows:

By Mail: Mail Stop PETITION
Commissioner for Patents
P. O. Box 1450
Alexandria, VA 22313-1450

By hand: U. S. Patent and Trademark Office
Customer Service Window, Mail Stop Petitions
Randolph Building
401 Dulany Street
Alexandria, VA 22314

By FAX: (571) 273-8300

Telephone inquiries concerning this decision should be directed to undersigned at 571-272-1642.

All other inquiries concerning either the examination or status of the application should be directed to the Technology Center.

April Wise
Petitions Examiner
Office of Petitions

UNITED STATES PATENT AND TRADEMARK OFFICE

UNITED STATES DEPARTMENT OF COMMERCE
United States Patent and Trademark Office
Address: COMMISSIONER FOR PATENTS
P.O. Box 1450
Alexandria, Virginia 22313-1450
www.uspto.gov

IV (TRANSMETA)
C/O MURABITO, HAO & BARNES LLP
TWO NORTH MARKET STREET
THIRD FLOOR
SAN JOSE, CA 95113

Mail Date: 04/21/2010

Applicant	: Robert Fu	: DECISION ON REQUEST FOR
Patent Number	: 7642835	: RECALCULATION of PATENT
Issue Date	: 01/05/2010	: TERM ADJUSTMENT IN VIEW
Appliction No	: 10/712,523	: OF WYETH AND NOTICE OF INTENT TO
Filed	: 11/12/2003	: ISSUE CERTIFICATE OF CORRECTION
		:

The Request for Recalculation is **GRANTED** to the extent indicated.

The patent term adjustment has been determined to be **231** days. The USPTO will *sua sponte* issue a certificate of correction reflecting the amount of PTA days determined by the recalculation.

Prior to the issuance of the certificate of correction, the USPTO will afford patentee an opportunity to be heard and request reconsideration. Accordingly, patentee has **one month or thirty (30) days**, whichever is longer, to file a request for reconsideration of this patent term adjustment calculation. See 35 U.S.C. 154(b)(3)(B)(ii) and 37 CFR 1.322(a)(4). No extensions of time will be granted under 37 CFR 1.136.

Patentee should use document code PET.OP if electronically filing a request for reconsideration of this patent term adjustment calculation. The patentee must also include the information required by 37 CFR 1.705(b)(2) and the fee required by 37 CFR 1.18(e). If patentee does not file a timely request for reconsideration of this patent term adjustment calculation including the information required by 37 CFR 1.705(b)(2) and the fee required by 37 CFR 1.18(e), the USPTO will issue a certificate of correction reflecting the PTA determination noted above.

Patentee should be aware that in order to preserve the right to review in the United States District Court for the District of Columbia of the USPTO patent term adjustment determination, patentee must ensure that he or she also take the steps required under 35 U.S.C. 154(b)(4)(A) in a timely manner. Nothing in the request for recalculation should be construed as providing an alternative time frame for commencing a civil action under 35 U.S.C. 154(b)(4)(A).

Any questions concerning this decision should be directed to the Office of Patent Legal Administration at 571-272-7702.

UNITED STATES PATENT AND TRADEMARK OFFICE

Commissioner for Patents
United States Patent and Trademark Office
P.O. Box 1450
Alexandria, VA 22313-1450
www.uspto.gov

SUGHRUE-265550
2100 PENNSYLVANIA AVE NW
WASHINGTON DC 20037-3213

COPY MAILED

MAY 0 2 2007

OFFICE OF PETITIONS

In re Application of	:	
Komatsu, et al.	:	DECISION ACCORDING STATUS
Application No. 10/712,530	:	UNDER 37 CFR 1.47(a)
Filed: November 14, 2003	:	
Attorney Docket No. Q78179	:	

This is in response to the petition under 37 CFR 1.47(a), filed November 14, 2003. The petition was recently forwarded to the Office of Petitions for consideration.

The petition under 37 CFR 1.47(a) is **GRANTED**.

Petitioner has shown that inventors Nagata, Nakahara, and Yumoto have refused to execute the declaration after having been mailed the application papers to their last known addresses.

The above-identified application and papers have been reviewed and found to be in compliance with 37 CFR 1.47(a). Accordingly, the above-identified application is hereby accorded Rule 1.47(a) status. As provided in 37 CFR 1.47(c), this Office will forward notice of this application's filing to the non-signing inventor at the last known address provided on the declaration. Notice of the filing of this application will also be published in the Official Gazette.

The matter is being forwarded to the Office of Patent Publication for processing into a patent.

Telephone inquiries related to this decision may be directed to the undersigned at (571)272-3207.

Cliff Congo
Petitions Attorney
Office of Petitions

UNITED STATES PATENT AND TRADEMARK OFFICE

Commissioner for Patents
United States Patent and Trademark Office
P.O. Box 1450
Alexandria, VA 22313-1450
www.uspto.gov

MIKITO NAGATA
C/O QUALLION LLC
28640 AVENUE STANFORD STE 100
VALENCIA CA 91355

COPY MAILED

MAY 0 2 2007

OFFICE OF PETITIONS

In re Application of :
Shigeo Komatsu, Hiroshi Mukai, Tetsuya :
Murai, Shinya Kitano, Mikio Okada, :
Hiroshi Nakahara, Mikito Nagata, :
Hiroyuki Yumoto :
Application No. 10/712,530 :
Filed: November 14, 2003 :
Title: Nonaqueous Secondary
Electrolytic Battery

LETTER

Dear Mr. Nagata:

You are named as a joint inventor in the above-identified United States patent application filed under the provisions of 35 USC 116 (United States Code) and 37 CFR 1.47(a), Rules of Practice in Patent Cases. Should a patent be granted on the application you will be designated therein as a joint inventor.

As a joint inventor, you are entitled to inspect any paper in the file wrapper of the application, order copies of all or any part thereof (at a prepaid cost per 37 CFR 1.19) or make your position of record in the application. Alternatively, you may arrange to do any of the preceding through a registered patent attorney or agent presenting written authorization from you. If you care to join the application, agent of record would presumably assist you. Joining in the application would entail the filing of an appropriate oath or declaration by you pursuant to 37 CFR 1.63.

Telephone inquiries regarding this communication should be directed to Petitions Attorney Cliff Congo at (571)272-3207. Requests for information regarding your application should be directed to the File Information Unit at (703) 308-2733. Information regarding how to pay for and order a copy of the application, or a specific paper in the application, should be directed to the Certification Division at (703) 308-9726 or 1-800-972-6382 (outside the Washington D.C. area).

Cliff Congo
Petitions Attorney
Office of Petitions

UNITED STATES PATENT AND TRADEMARK OFFICE

Commissioner for Patents
United States Patent and Trademark Office
P.O. Box 1450
Alexandria, VA 22313-1450
www.uspto.gov

HIROSHI NAKAHARA
C/O QUALLION LLC
28640 AVENUE STANFORD STE 100
VALENCIA CA 91355

COPY MAILED

MAY 0 2 2007

OFFICE OF PETITIONS

In re Application of :
Shigeo Komatsu, Hiroshi Mukai, Tetsuya :
Murai, Shinya Kitano, Mikio Okada, :
Hiroshi Nakahara, Mikito Nagata, :
Hiroyuki Yumoto :
Application No. 10/712,530 :
Filed: November 14, 2003 :
Title: Nonaqueous Secondary
Electrolytic Battery

LETTER

Dear Mr. Nakahara:

You are named as a joint inventor in the above-identified United States patent application filed under the provisions of 35 USC 116 (United States Code) and 37 CFR 1.47(a), Rules of Practice in Patent Cases. Should a patent be granted on the application you will be designated therein as a joint inventor.

As a joint inventor, you are entitled to inspect any paper in the file wrapper of the application, order copies of all or any part thereof (at a prepaid cost per 37 CFR 1.19) or make your position of record in the application. Alternatively, you may arrange to do any of the preceding through a registered patent attorney or agent presenting written authorization from you. If you care to join the application, agent of record would presumably assist you. Joining in the application would entail the filing of an appropriate oath or declaration by you pursuant to 37 CFR 1.63.

Telephone inquiries regarding this communication should be directed to Petitions Attorney Cliff Congo at (571)272-3207. Requests for information regarding your application should be directed to the File Information Unit at (703) 308-2733. Information regarding how to pay for and order a copy of the application, or a specific paper in the application, should be directed to the Certification Division at (703) 308-9726 or 1-800-972-6382 (outside the Washington D.C. area).

Cliff Congo
Petitions Attorney
Office of Petitions

UNITED STATES PATENT AND TRADEMARK OFFICE

Commissioner for Patents
United States Patent and Trademark Office
P.O. Box 1450
Alexandria, VA 22313-1450
www.uspto.gov

HIROYUKI YUMOTO
C/O QUALLION LLC
28640 AVENUE STANFORD STE 100
VALENCIA CA 91355

COPY MAILED

MAY 0 2 2007

OFFICE OF PETITIONS

In re Application of :
Shigeo Komatsu, Hiroshi Mukai, Tetsuya :
Murai, Shinya Kitano, Mikio Okada, :
Hiroshi Nakahara, Mikito Nagata, :
Hiroyuki Yumoto :
Application No. 10/712,530 :
Filed: November 14, 2003 :
Title: Nonaqueous Secondary
Electrolytic Battery

LETTER

Dear Mr. Yumoto:

You are named as a joint inventor in the above-identified United States patent application filed under the provisions of 35 USC 116 (United States Code) and 37 CFR 1.47(a), Rules of Practice in Patent Cases. Should a patent be granted on the application you will be designated therein as a joint inventor.

As a joint inventor, you are entitled to inspect any paper in the file wrapper of the application, order copies of all or any part thereof (at a prepaid cost per 37 CFR 1.19) or make your position of record in the application. Alternatively, you may arrange to do any of the preceding through a registered patent attorney or agent presenting written authorization from you. If you care to join the application, agent of record would presumably assist you. Joining in the application would entail the filing of an appropriate oath or declaration by you pursuant to 37 CFR 1.63.

Telephone inquiries regarding this communication should be directed to Petitions Attorney Cliff Congo at (571)272-3207. Requests for information regarding your application should be directed to the File Information Unit at (703) 308-2733. Information regarding how to pay for and order a copy of the application, or a specific paper in the application, should be directed to the Certification Division at (703) 308-9726 or 1-800-972-6382 (outside the Washington D.C. area).

Cliff Congo
Petitions Attorney
Office of Petitions

UNITED STATES PATENT AND TRADEMARK OFFICE

UNITED STATES DEPARTMENT OF COMMERCE
United States Patent and Trademark Office
Address: COMMISSIONER FOR PATENTS
P.O. Box 1450
Alexandria, Virginia 22313-1450
www.uspto.gov

MARTIN & ASSOCIATES, LLC
P.O. BOX 548
CARTHAGE, MO 64836-0548

Mail Date: 04/21/2010

Applicant	: David Charles Boutcher	: DECISION ON REQUEST FOR
Patent Number	: 7587723	: RECALCULATION of PATENT
Issue Date	: 09/08/2009	: TERM ADJUSTMENT IN VIEW
Appliction No	: 10/712,537	: OF WYETH AND NOTICE OF INTENT TO
Filed	: 11/13/2003	: ISSUE CERTIFICATE OF CORRECTION
		:

The Request for Recalculation is **GRANTED** to the extent indicated.

The patent term adjustment has been determined to be **1699** days. The USPTO will *sua sponte* issue a certificate of correction reflecting the amount of PTA days determined by the recalculation.

Prior to the issuance of the certificate of correction, the USPTO will afford patentee an opportunity to be heard and request reconsideration. Accordingly, patentee has **one month or thirty (30) days**, whichever is longer, to file a request for reconsideration of this patent term adjustment calculation. See 35 U.S.C. 154(b)(3)(B)(ii) and 37 CFR 1.322(a)(4). No extensions of time will be granted under 37 CFR 1.136.

Patentee should use document code PET.OP if electronically filing a request for reconsideration of this patent term adjustment calculation. The patentee must also include the information required by 37 CFR 1.705(b)(2) and the fee required by 37 CFR 1.18(e). If patentee does not file a timely request for reconsideration of this patent term adjustment calculation including the information required by 37 CFR 1.705(b)(2) and the fee required by 37 CFR 1.18(e), the USPTO will issue a certificate of correction reflecting the PTA determination noted above.

Patentee should be aware that in order to preserve the right to review in the United States District Court for the District of Columbia of the USPTO patent term adjustment determination, patentee must ensure that he or she also take the steps required under 35 U.S.C. 154(b)(4)(A) in a timely manner. Nothing in the request for recalculation should be construed as providing an alternative time frame for commencing a civil action under 35 U.S.C. 154(b)(4)(A).

Any questions concerning this decision should be directed to the Office of Patent Legal Administration at 571-272-7702.

IN THE UNITED STATES PATENT AND TRADEMARK OFFICE

Applicant: Paul Gierow, et al.
Art Unit: 1762
Examiner: Bashore
Serial No.: 10/712,555
Filed: 11-12-03
Title: NON-INTRUSIVE PHOTOGRAMMETRIC TARGETS

Assistant Commissioner for Patents
Washington, DC 20231

PETITION TO MAKE SPECIAL UNDER 37 C.F.R. 1.102(c)

Dear Sir/Madam:

Please consider this petition for advancing the examination of this application out of turn pursuant to the requirements set for in 37 C.F.R. 1.102(c). Specifically, the inventor, William R. Clayton, is more than 65 years of age. This petition is supported by an affidavit of William R. Clayton that is included as Appendix A.

Please apply any additional fees or credits to deposit account #: 50-0954, reference #: S7312-70443.

Respectfully Submitted,

11/12/03
David E. Mixon Date
Reg. No. 43,809

Bradley Arant Rose & White LLP
200 Clinton Ave. West, Suite 900
Huntsville, AL 35801-4900

Telephone: (256) 517-5100
Facsimile: (256) 517-5200

1/19/2003 WRSFAN1 00000025 10712555
4 FC:1460 130.00 OP

3/159291.1

PETITION GRANTED

William Krynski
Special Program Examiner
Technology Center 1700

SEP 19 2006

UNITED STATES PATENT AND TRADEMARK OFFICE

Commissioner for Patents
United States Patent and Trademark Office
P.O. Box 1450
Alexandria, VA 22313-1450
www.uspto.gov

July 2005

TOWNSEND AND TOWNSEND AND CREW, LLP
TWO EMBARCADERO CENTER
EIGHTH FLOOR
SAN FRANCISCO, CA 94111-3834

AUG 29 2005

In re Application of:
SHIGEAKI TANAKA ET AL.
Serial No.: 10/712,558
Filed: 12 November 2003
Docket: 16869K-099600US
Title: DISK MODULE AND DISK ARRAY APPARATUS

DECISION ON PETITION TO MAKE SPECIAL UNDER 37 C.F.R. § 1.102(d)

This is a decision on the petition filed on November 11, 2004, to make the above-identified application special under the accelerated examination procedure set forth in MPEP § 708.02(VIII) in accordance with 37 C.F.R. § 1.102(d).

The petition to make the application special is **DISMISSED**.

In support of the petition, petition provides: a) the applicable petition fee; b) a statement that all claims are directed to a single invention, and that any election later required will be made without traverse; c) a statement that a pre-examination search was made, including the search areas; d) a copy of each of the references deemed most closely related to the claimed subject matter; and e) a discussion of the teaching of the references.

For accelerated examination under MPEP § 708.02(VIII) in accordance with 37 C.F.R. § 1.102(d), a showing of the following is required: a) a petition to make special accompanied by the applicable petition fee; b) all claims are directed to a single invention; c) a statement that a pre-examination search was made, including the search areas; d) a copy of each of the references deemed most closely related to the claimed subject matter; and e) a detailed discussion of the references pointing out with the particularity required by 37 CFR 1.111 (b) and (c), how the claimed subject matter is distinguishable over the references.

The requirements of MPEP § 708.02(VIII)(a) – (d) are considered to have been met. However, petitioner fails to point out with the particularity required by 37 CFR § 1.111 (b) and (c), how the claimed subject matter is distinguishable over the *each* of the references. Therefore, petitioner fails to meet the requirement of MPEP § 708.02(VIII)(e).

37 CFR § 1.111 (b) states"[a] general allegation that the claims define a patentable invention without specifically pointing out how the language of the claims patentably distinguishes them from the references does not comply with the requirements of this section." 37 CFR § 1.111 (c) states in part "the applicant or patent owner must clearly point out the patentable novelty which he or she thinks the claims present in view of the state of the art disclosed by the references cited or the objections made."

Petitioner presents a summary of the limitations of independent claim 1, a statement that none of the references disclose the disk array apparatus having combination of limitations found in the claim 1, and a list of each of the cited references along with a short summary of the teachings of each reference.

Petitioner fails to distinguish each independent claim from each reference in a manner satisfying 37 CFR § 1.111 (b) and (c). For instance, with respect to submitted reference to 6,754,082 B1, petitioner does not state what limitations the claims recite which are neither disclosed nor made obvious by the reference. The same defect is found for all of the submitted references. Such a statement is required under 37 CFR § 1.111 (b) and (c). A mere summary of the claims and the references, with no comparison and distinguishment between the two, is insufficient to satisfy the requirements of MPEP § 708.02(VIII)(e).

While Technology Center Directors may have granted petitions that do not comply with the detailed discussion requirement of the Accelerated Examination procedure, Technology Center Director decisions on petitions are not binding precedent of the Patent Examining Corps, and the application of an improper standard in certain cases does not require the Office to continue to apply the improper standard in all cases. *See In re The Boulevard Entertainment, Inc.*, 334 F.3d 1336, 1343, 67 USPQ2d 1475, 1480 (Fed. Cir. 2003)).

For the above-mentioned reasons, the petition is dismissed. The application will therefore be taken up by the examiner for action in its regular turn.

Any request for reconsideration of this decision must be submitted within 2 (two) months of the date of this decision in order to be considered timely.

Any inquiry regarding this decision should be directed to Hien H. Phan, Special Program Examiner, at (571) 272-1606.

Hien H. Phan, Special Program Examiner
Technology Center 2800 - Semiconductors,
Electrical & Optical Systems & Components

UNITED STATES PATENT AND TRADEMARK OFFICE

Commissioner for Patents
United States Patent and Trademark Office
P.O. Box 1450
Alexandria, VA 22313-1450
www.uspto.gov

MORRISON & FOERSTER, LLP
555 WEST FIFTH STREET
SUITE 3500
LOS ANGELES CA 90013-1024

COPY MAILED

AUG 23 2007

OFFICE OF PETITIONS

In re Application of	:	
Morito Morishima et al.	:	
Application No. 10/712,577	:	DECISION GRANTING PETITION
Filed: November 12, 2003	:	UNDER 37 CFR 1.313(c)(2)
Attorney Docket No. 393032041900	:	

This is a decision on the petition under 37 CFR 1.313(c)(2), filed August 15, 2007, to withdraw the above-identified application from issue after payment of the issue fee.

The petition is **GRANTED**.

The above-identified application is withdrawn from issue for consideration of a submission under 37 CFR 1.114 (request for continued examination). *See* 37 CFR 1.313(c)(2).

Petitioner is advised that the issue fee paid on July 3, 2007 cannot be refunded. If, however, this application is again allowed, petitioner may request that it be applied towards the issue fee required by the new Notice of Allowance.[1]

Telephone inquiries should be directed to Terri Williams at (571) 272-2991.

This application is being referred to Technology Center AU 2627 for processing of the request for continued examination under 37 CFR 1.114 and for consideration of the concurrently filed Amendment.

Frances Hicks
Petitions Examiner
Office of Petitions

[1] *The request to apply the issue fee to the new Notice may be satisfied by completing and returning the new Part B – Fee(s) Transmittal Form (along with any balance due at the time of submission). Petitioner is advised that the Issue Fee Transmittal Form must be completed and timely submitted to avoid abandonment of the application.*

UNITED STATES PATENT AND TRADEMARK OFFICE

Commissioner for Patents
United States Patent and Trademark Office
P.O. Box 1450
Alexandria, VA 22313-1450
www.uspto.gov

Date Mailed : October 25, 2007

Patent No. :6,806,724
Inventor : Leonard Hayden, et al.
Patent Issued :October 19, 2004
Docket No. :TAL:1016.2023
Re: Request for Certificate of Correction

Consideration has been given your request for the issuance of a certificate of correction for the above-identified patent under the provisions of Rule 1.323.

Respecting the alleged error(s) in the Attorney, Agent, or Firm, since the Attorney, Agent, or Firm is printed *solely* in accordance with the PTOL-85b (Issue Fee Transmittal), submitted at time of payment of the base issue fee, no correction is in order here unless a petition is granted under 1.182.

In view of the foregoing, your request is hereby denied.

Any petition under 37 CFR 1.182 should be directed to the attention of the Assistant Commissioner for Patents, using the following mailing address or FAX number.

By Mail: PETITIONS
Commissioner for Patents
Post Office Box 1450
Alexandria, VA 22313-1450

By hand: Customer Service Window
Mail Stop Petitions
Randolph Building
401 Dulany Street
Alexandria, VA 22314

By fax: 571-273-8300
ATTN: Office of Petitions

If, the petition under 37 CFR 1.182 (required fee currently $130), is filed and granted, the patentee would be entitled to a certificate of correction under 37 CFR 1.323 (required fee currently $100).

Cecelia Newman
Decisions & Certificates
of Correction Branch
(703) 308-9390 or (703) 308- 9380 ext. 123

Chernoff, Vilhauer, McClung & Stenzel, LLP
601 S.W. Second Avenue, Suite 1600
Portland, OR 97204-3157

CBN/arg

UNITED STATES PATENT AND TRADEMARK OFFICE

Commissioner for Patents
United States Patent and Trademark Office
P.O. Box 1450
Alexandria, VA 22313-1450
www.uspto.gov
DIW Oct-06

QUALCOMM INCORPORATED
5775 MOREHOUSE DR.
SAN DIEGO CA 92121

COPY MAILED
OCT 13 2006
OFFICE OF PETITIONS

In re Application of :
Harinath Garudadri :
Application No. 10/712,583 : DECISION ON PETITION
Filed: 12 November, 2003 :
Atty Docket No. 010033C1 :

This is a decision on the petition filed on 20 July, 2006, under 37 CFR 1.137(b),[1] to revive the above-identified application.

The petition is **GRANTED**.

The application became abandoned on 15 June, 2006, for failure to timely submit the issue and publication fees in response to the Notice of Allowance and Fee(s) Due, mailed on 14 March, 2006, which set a three (3) month statutory period for reply. Notice of Abandonment was mailed on 26 June, 2006.

---

[1] Effective December 1, 1997, the provisions of 37 CFR 1.137(b) now provide that where the delay in reply was unintentional, a petition may be filed to revive an abandoned application or a lapsed patent pursuant to 37 CFR 1.137(b). A grantable petition filed under the provisions of 37 CFR 1.137(b) must be accompanied by:

(1) the required reply, unless previously filed. In a nonprovisional application abandoned for failure to prosecute, the required reply may be met by the filing of a continuing application. In a nonprovisional utility or plant application filed on or after June 8, 1995, and abandoned for failure to prosecute, the required reply may also be met by the filing of a request for continuing examination in compliance with § 1.114. In an application or patent, abandoned or lapsed for failure to pay the issue fee or any portion thereof, the required reply must be the payment of the issue fee or any outstanding balance thereof. In an application, abandoned for failure to pay the publication fee, the required reply must include payment of the publication fee.

(2) the petition fee as set forth in 37 CFR 1.17(m);

(3) a statement that the entire delay in filing the required reply from the due date for the reply until the filing of a grantable petition pursuant to 37 CFR 1.137(b) was unintentional. The Commissioner may required additional information where there is a question whether the delay was unintentional; and

(4) any terminal disclaimer (and fee as set forth in 37 CFR 1.20(d)) required pursuant to 37 CFR 1.137(c)).

The issue and publication fees have been received.

The statement contained in the instant petition does not set forth that the entire delay from the due date of the required reply to the date of the filing of a grantable petition was unintentional as required by 37 CFR 1.137(b)(3). However, the statement contained in the instant petition is being so construed. Petitioner **must** notify the Office if this is not a correct interpretation.

This application is being referred to the Publishing Division for processing into a patent.

Telephone inquiries concerning this matter may be directed to the undersigned at (571)272-3231.

D Wood

Douglas I. Wood
Senior Petitions Attorney
Office of Petitions

UNITED STATES PATENT AND TRADEMARK OFFICE

COMMISSIONER FOR PATENTS
UNITED STATES PATENT AND TRADEMARK OFFICE
P.O. BOX 1450
ALEXANDRIA, VA 22313-1450
www.uspto.gov

Foley & Lardner LLP
P.O. Box 80278
San Diego CA 92138-0278

COPY MAILED

DEC 31 2007

OFFICE OF PETITIONS

In re Patent No. 7,220,724 :
Issued: May 22, 2007 : LETTER REGARDING PTA AND
Application No. 10/712,584 : CERTIFICATE OF CORRECTION
Filed: November 12, 2003 :
Atty. Dkt. No.: 1920-338N3/09801388 :

This letter is in response to the "COMMUNICATION REGARDING PATENT TERM ADJUSTMENT," filed July 30, 2007. The Office thanks patentees for their good faith and candor in bringing this to our attention.

The above-identified application matured into U.S. Patent No. 7,220,724 on May 22, 2007. The patent issued with a patent term adjustment (PTA) of 116 days. Patentees indicate that the adjustment of 116 days accorded the patent is incorrect and that the correct adjustment is 113 days. Patentees, however, have provided no further detail concerning the error in the adjustment.

The calculation of adjustment has been carefully reviewed. The adjustment for Office delays totaling 332 days is deemed accurate. The reductions totaling 216 days accorded at the time of issuance are also deemed accurate.

Accordingly, at the time of issuance, the patent was entitled to an adjustment of 116 days (adjustments totaling 332 days less reductions totaling 216 days), as indicated on the Letters Patent.

As applicants are advising us of a potential error in providing too much patent term adjustment in this application, no fee is due in connection to this matter.

If patentees remain of the belief that there is an error in the calculation of adjustment, patentees should within TWO MONTHS of the mail date of the mail date of the instant letter respond by specifically setting forth patentees' own calculation of adjustment for the instant patent.

Telephone inquiries specific to this matter should be directed to Petitions Attorney Alesia M. Brown at (571) 272-3205.

Kery Fries
Senior Legal Advisor
Office of Patent Legal Administration
Office of Deputy Commissioner
for Patent Examination Policy

UNITED STATES PATENT AND TRADEMARK OFFICE

Commissioner for Patents
United States Patent and Trademark Office
P.O. Box 1450
Alexandria, VA 22313-1450
www.uspto.gov

OCT 6 2004

In re Application of
KHUDENKO.
Serial Number: 10/712,603
Filed: November 12, 2003
For: PULSATING REACTORS

PETITION UNDER
M.P.E.P.708.02 V

This is in response to the petition filed November 12, 2003, requesting that the above-identified application be granted Special Status under Sections 708.02 V of the MPEP and 37 CFR 1.102(c) (**no fee required**).

The request for Special Status considered under Section 708.02 V is granted because criteria under 37 CFR 1.102(c) has been met.

Accordingly the petition is **GRANTED.**

Richard Crispino, Special Programs Examiner
Technology Center 1700
Chemical and Materials Engineering

Boris M. Khudenko
744 Moores Mill Rd
Atlanta, GA 30327

UNITED STATES PATENT AND TRADEMARK OFFICE

Commissioner for Patents
United States Patent and Trademark Office
P.O. Box 1450
Alexandria, VA 22313-1450
www.uspto.gov

MAILED
FROM DIRECTOR'S OFFICE

SEP 20 2007

TECHNOLOGY CENTER 3600

Dana Andrew Alden
MacLean-Fogg Company
1000 Allanson Road
Mundelein, IL 60060

Applicant:	Theodore Bydalek et al	:DECISION ON PETITION
Serial No.:	10/712611	:UNDER 37 CFR 1.181
Filed:	November 13, 2003	:PETITION TO INVOKE
For:	FASTENER ASSEMBLY	:SUPERVISORY AUTHORITY

This is a decision on the Petition filed July 17, 2007, a Request to Invoke Supervisory Authority to review the Examiner's requirement that replacement sheet of figure 30 was necessary, and to review the Examiner's objection that the replacement sheet for figure 30 constitutes new matter.

The application was filed November 13, 2003, with a Request for Continued Examination (RCE) filed June 14, 2003. In the RCE, applicant included amendments to the claims, which, among other amendments, included language in at least new claim 53 claiming "an annular bearing surface that is provided on the body and generally spherically convex". A non-final rejection was mailed out August 31, 2006, including an objection to the drawings with the statement "the annular bearing surface on the body is spherically convex" must be shown or the feature(s) cancelled from the claim(s), according to rule 37 CFR 1.83 (a). A drawing amendment to figure 30 was submitted on February 28, 2007. In the final rejection of May 17, 2007, the Examiner objected to the added material in figure 30 as not being supported by the specification, such that the added material is new matter.

As to the review of the requirement that the claimed subject matter be in the figures, 37 CFR 1.83(a), as set forth in the Office action dated August 31, 2006, requires the drawings to show every feature of the invention specified in the claims to be illustrated in the drawings. Applicant's options to satisfy this requirement are either to correct the drawings to include the claimed limitation in the drawings, or remove the claimed limitation from the claim(s). Therefore, as set forth in 37 CFR 1.83 (a), if applicant wished to retain the limitation in the claim (s), he or she is required to submit corrected drawings showing the claimed features.

As to issue of new matter, applicants state the specification fully supports amended figure 30 (petition, last paragraph pg 4), and that there are no other locations suitable to be an annular bearing surface (petition, last two paragraphs of page 5). Although the specification states that an annular bearing surface on the body is spherically convex, it clearly does not specify which

surface of the body it is describing. Indeed, in applicant's statement of the facts, he states that the annular bearing surface could be spherically shaped in addition to being frustoconical in shape (petition, page 2, lines 10-12). Since the frustoconical shaped surface is the portion of the body located inside the cap, it would appear that applicants are stating the annular bearing surface is the surface of the body inside the cap. In addition, the portion of the body that is actually a "bearing" surface in figure 30 is the surface on which the lower portion of the cap rests, or the surface facing upward rather than downward in the figure. When only the body and the cap are claimed without the bolt as in claim 53, the lowermost surface of the body has nothing to bear against, making it an unlikely candidate for being a bearing surface. Therefore, the addition of a spherically convex surface to the lowermost surface of the body in figure 30 is new matter, in the event that there are several surfaces that could have been spherically convex, and the exact nature (depth, proportion) of the convex portion were not previously defined.

The requirement for illustration was appropriate, and the objection relating to new matter was appropriate. As to applicant's contention that the examiner placed applicants in an impossible situation (petition, page 4, lines 20, 21), applicant has several possible courses of action, including removing the limitation from the claim (s), amending the limitation to include that which is fully described and illustrated, or filing a continuation-in-part to incorporate the claimed subject matter fully into the specification and figures.

In view of the Notice of Appeal filed August 17, 2007, the Appeal Brief is due October 17, 2007.

SUMMARY: Petition is **DENIED**.

Donald Hajec
Director, TC 3600
(571) 272-5150

UNITED STATES PATENT AND TRADEMARK OFFICE

Commissioner for Patents
United States Patent and Trademark Office
P.O. Box 1450
Alexandria, VA 22313-1450
www.uspto.gov

DOBRUSIN & THENNISCH PC
29 W LAWRENCE ST
SUITE 210
PONTIAC MI 48342

COPY MAILED

SEP 2 6 2005

OFFICE OF PETITIONS

In re Application of
Hajduk et al.
Application No. 10/712,617
Filed: November 12, 2003
Title of Invention: Tethered Plate Sensor for Measuring Physical Properties of Fluid Samples

DECISION ON PETITION

This is a decision on the petition under 37 CFR 1.137(b) filed September 13, 2005, to revive the above-identified application.

Any request for reconsideration of this decision must be submitted within TWO (2) MONTHS from the mail date of this decision. Extensions of time under 37 CFR 1.136(a) are permitted. The reconsideration request should include a cover letter entitled "Renewed Petition under 37 CFR 1.137(b)."

This above-identified application became abandoned for failure to timely file a reply to an Office Action mailed January 12, 2005. The Office Action set a one (1) month shortened statutory period for reply. A reply to the Office Action was filed on February 13, 2004. However, the examiner determined the reply submitted did not constitute a proper reply or a bona fide attempt to reply to the Office Action. Accordingly, this application became abandoned on February 13, 2005. A Notice of Abandonment was mailed on July 28, 2005.

The petition is **dismissed**.

A grantable petition under 37 CFR 1.137(b) must be accompanied by: (1) the required reply, unless previously filed; (2) the petition fee as set forth in 37 CFR 1.17(m); (3) a statement that "the entire delay in filing the required reply from the due date for the reply until the filing of a grantable petition pursuant to 37 CFR 1.137(b) was unintentional"; and (4) any terminal disclaimer (and fee as set forth in 37 CFR 1.20(d)) required by 37 CFR 1.137(c). Where there is a question as to whether either the

abandonment or the delay in filing a petition under 37 CFR 1.137 was unintentional, the Commissioner may require additional information. See MPEP 711.03 (c)(III)(c) and (D).

The instant petition lacks item (1). Petitioner must submit a reply to the January 12, 2005 Office Action with the renewed petition. The "response" in the form of the request for two month extension of time, is not an acceptable reply. Further the maximum time period for expiration has expired. Accordingly the $450.00 submitted towards the extension of time will be refunded to deposit account no. 50-1097.

Further correspondence with respect to this matter should be addressed as follows:

By mail:	Mail Stop Petition Commissioner for Patents P.O. Box 1450 Alexandria, VA 22313-1450
By facsimile:	(571) 273-8300
By delivery service: (FedEx, UPS, DHL, etc.)	U.S. Patent and Trademark Office Customer Window, Mail Stop Petition Randolph Building 401 Dulany Street Alexandria, VA 22314

Telephone inquiries concerning this matter should be directed to the undersigned at (571) 272-3215.

Charlema R. Grant
Petitions Attorney
Office of Petitions

UNITED STATES PATENT AND TRADEMARK OFFICE

Commissioner for Patents
United States Patent and Trademark Office
P.O. Box 1450
Alexandria, VA 22313-1450
www.uspto.gov

DOBRUSIN & THENNISCH PC
29 W LAWRENCE ST
SUITE 210
PONTIAC MI 48342

COPY MAILED

NOV 0 8 2005

OFFICE OF PETITIONS

In re Application of
Hajduk et al.
Application No. 10/712,617
Filed: November 12, 2003
Title of Invention: Tethered Plate Sensor for Measuring Physical Properties of Fluid Samples

DECISION ON PETITION

This is a decision on the renewed petition under 37 CFR 1.137(b) filed October 13, 2005, to revive the above-identified application.

This above-identified application became abandoned for failure to timely file a reply to an Office Action mailed January 12, 2005. The Office Action set a one (1) month shortened statutory period for reply. A reply to the Office Action was filed on February 13, 2004. However, the examiner determined the reply submitted did not constitute a proper reply or a bona fide attempt to reply to the Office Action. Accordingly, this application became abandoned on February 13, 2005. A Notice of Abandonment was mailed on July 28, 2005. A petition to revive filed under 37 CFR 1.137(b) was dismissed on September 26, 2005.

This petition is hereby **GRANTED**.

The Office hereby acknowledges the receipt of the amendment submitted with the instant petition.

Telephone inquiries concerning this matter should be directed to the undersigned at (571) 272-3215.

Charlema R. Grant
Petitions Attorney
Office of Petitions

UNITED STATES PATENT AND TRADEMARK OFFICE

UNITED STATES DEPARTMENT OF COMMERCE
United States Patent and Trademark Office
Address: COMMISSIONER FOR PATENTS
P.O. Box 1450
Alexandria, Virginia 22313-1450
www.uspto.gov

APPLICATION NO.	FILING DATE	FIRST NAMED INVENTOR	ATTORNEY DOCKET NO.	CONFIRMATION NO.
10/712,621	11/13/2003	Anil D. Jha	2003P86274US	2148

37462 7590 03/03/2010

LANDO & ANASTASI, LLP
ONE MAIN STREET, SUITE 1100
CAMBRIDGE, MA 02142

EXAMINER	
DRODGE, JOSEPH W	

ART UNIT	PAPER NUMBER
1797	

NOTIFICATION DATE	DELIVERY MODE
03/03/2010	ELECTRONIC

Please find below and/or attached an Office communication concerning this application or proceeding.

The time period for reply, if any, is set in the attached communication.

Notice of the Office communication was sent electronically on above-indicated "Notification Date" to the following e-mail address(es):

docketing@ll-a.com
gengelson@ll-a.com

UNITED STATES PATENT AND TRADEMARK OFFICE

Commissioner for Patents
United States Patent and Trademark Office
P.O. Box 1450
Alexandria, VA 22313-1450
www.uspto.gov

MAR 0 3 2010

wk

Mailed:
In re application of
Jha et al.
Serial No. 10/712,621
Filed: November 13, 2003
For: Water Treatment System

DECISION ON PETITION

This is a decision on the PETITION UNDER 37 CFR 1.198 to reopen or reconsider prosecution after a decision by the Board of Patent Appeals and Interferences.

A review of the record indicates that a Request for Continued Examination has been filed and processed. The application is currently on the Examiner's Docket awaiting an action on the merits.

DECISION

Accordingly, the instant petition is **DISMISSED.**

/JACQUELINE STONE/

Jacqueline M. Stone, Director
Technology Center 1700
Chemical and Materials Engineering

Elias Domingo
LANDO & ANASTASI, LLP
ONE MAIN STREET, SUITE 1100
CAMBRIDGE MA 02142

SPE RESPONSE FOR CERTIFICATE OF CORRECTION

DATE : 6/18/08

Paper No.: —

TO SPE OF : ART UNIT 2828

SUBJECT : Request for Certificate of Correction for Appl. No.: 10/712634 Patent No: 7339960 B2

A response is requested with respect to a request for a certificate of correction.

With respect to the change(s) requested to correct Office and/or Applicant's errors, should the patent read as shown in the certificate of correction attached herewith or the COCIN document(s), in IFW images for the above-identified patented application? No new matter should be introduced, nor should the scope or meaning of the claims be changed.

If the response is for an IFW, within 7 days, please complete and forward the response, to the employee (named below) via scanning into application images, using document code **COCX**.

If the response is for a paper file wrapper, please complete the response and forward the response with the paper file wrapper, to the employee (named below), within 7 days, to:

Certificates of Correction Branch (CofC)
South Tower - 9A22
Palm Location 7580

VIRGINIA TOLBERT
Certificates of Correction Branch
703-308-9390 ext. 113

Thank You For Your Assistance

The request for issuing the above-identified correction(s) is hereby:
Note your decision on the appropriate box.

☒ **Approved**	All changes apply.
☐ **Approved in Part**	Specify below which changes **do not** apply.
☐ **Denied**	State the reasons for denial below.

Comments: _____

MINSUN OH HARVEY
PRIMARY EXAMINER

SPE

7/23/08
Art Unit

UNITED STATES PATENT AND TRADEMARK OFFICE

Commissioner for Patents
United States Patent and Trademark Office
P.O. Box 1450
Alexandria, VA 22313-1450
www.uspto.gov

Francis I. Gray, Patent Attorney
P.O. Box 1931
Lake Oswego OR 97035

COPY MAILED

NOV 1 0 2009

OFFICE OF PETITIONS

In re Patent No. 6,902,406	:	
Issue Date: June 7, 2005	:	
Application No. 10/712,651	:	DECISION ON PETITION
Filed: November 12, 2003	:	
Attorney Docket No. KRAU07	:	

This is a decision on the petition under 37 CFR 1.378(c), filed August 10, 2009, to accept the unintentionally delayed payment of a maintenance fee for the above-identified patent.

The petition is **GRANTED**.

This patent expired on June 8, 2009 for failure to pay the three and one-half year maintenance fee. Since this petition was submitted within twenty-four months after the six-month grace period provided in 37 CFR 1.362(e), the petition was timely filed under the provisions of 37 CFR 1.378(c).

The maintenance fee is hereby accepted and the above-identified patent is reinstated as of the mail date of this decision.

Telephone inquiries concerning this decision should be directed to Terri Johnson at (571) 272-2991.

The patent file is being forwarded to Files Repository.

Terri Johnson
Petitions Examiner
Office of Petitions

2009 AUG 12 PM 4:23

IFW Boxm

PTO/SB/56 (03-09)
Approved for use through 03/31/2012. OMB 0651-0016
U.S. Patent and Trademark Office; U.S. DEPARTMENT OF COMMERCE
Under the Paperwork Reduction Act of 1995, no persons are required to respond to a collection of information unless it displays a valid OMB control number

PETITION TO ACCEPT UNINTENTIONALLY DELAYED PAYMENT OF MAINTENANCE FEE IN AN EXPIRED PATENT (37 CFR 1.378 (c))

Docket Number (Optional)

OIPE AUG 10 2009 PATENT & TRADEMARK OFFICE

RECEIVED
AUG 20 2009
OFFICE OF PETITIONS

OIPE AUG 10 2009 PATENT & TRADEMARK OFFICE

Mail to: Mail Stop Petition
Commissioner for Patents
P.O. Box 1450
Alexandria, VA 22313-1450
Fax: (571) 273-8300

NOTE: If information or assistance is needed in completing this form, please contact Petitions Information at (571) 272-3282.

Patent No. 6,902,406 Application Number 10/712,651

Issue Date June 7, 2005 Filing Date November 12, 2003

CAUTION: Maintenance fee (and surcharge, if any) payment must correctly identify: (1) the patent number (or reissue patent number, if a reissue) and (2) the application number of the actual U.S. application (or reissue application) leading to issuance of that patent to ensure the fee(s) is/are associated with the correct patent. 37 CFR 1.366(c) and (d).

Also complete the following information, if applicable

The above – identified patent

☐ Is a reissue of original Patent No. _____ original issue date _____

original application number _____

original filing date _____

08/14/2009 DALLEN 00000012 6902406
01 FC:1599 2130.00 OP

☐ resulted from the entry into the U.S. under 35 U.S.C. 371 of international application _____

filed on _____

11/10/2009 CKHLOK 00000001 6902406
01 FC:2551 490.00 OP
02 FC:1558 1640.00 OP

CERTIFICATE OF MAILING (37 CFR 1.89(a))

I hereby certify that this paper (*along with any paper referred to as being attached or enclosed) is being deposited with the United States Postal Service on the date shown below with sufficient ostage as first class main in an envelope addressed to Mail Stop Petition, Commissioner for Patents, P.O. Box 1450, Alexandria, VA 22313-1450, or facsimile transmitted to the U.S. Patent and Trademark Office on the date shown below.

August 5, 2009
Date

Francis T. Gray
Signature

Francis T. Gray
Typed or Printed Name of Person Signing Certificate

This collection of information is required by 37 CFR 1.378(c). The information is required to obtain or retain a benefit by the public which is to file (and by the USPTO to process) an application. Confidentiality is governed by 35 U.S.C. 122 and 37 CFR 1.11 and 1.14. This collection is estimated to take 1 hour to complete, including gathering, preparing, and submitting the completed application form to the USPTO. Time will vary depending upon the individual case. Any comments on the amount of time you require to complete this form and/or suggestions for reducing this burden, should be sent to the Chief Information Officer, U.S. Patent and Trademark Office, U.S. Department of Commerce, P.O. Box 1450, Alexandria, Virginia 22313-1450. DO NOT SEND FEES OR COMPLETED FORMS TO THIS ADDRESS. **SEND TO: Mail Stop Petition, Commissioner for Patents, P.O. Box 1450, Alexandria, Virginia 22313-1450**

If you need assistance in completing the form, call 1-800-PTO-9199 and select option 2.

Adjustment date: 11/10/2009 CKHLOK
08/14/2009 DALLEN 00000012 6902406
01 1599 -2130.00 OP

1. SMALL ENTITY

☑ Patentee claims, or has previously claimed, small entity status. See 37 CFR 1.27.

2. LOSS OF ENTITLEMENT TO SMALL ENTITY STATUS

☐ Patentee is no longer entitled to small entity status. See 37 CFR 1.27(g)

3. MAINTENANCE FEE (37 CFR 1.20(e)-(g))

The appropriate maintenance fee must be submitted with this petition, unless it was paid earlier.

NOT Small Entity			Small Entity		
Amount	Fee	(Code)	Amount	Fee	(Code)
☐ $ _____	3 ½ yr fee	(1551)	☑ $ 490.00	3 ½ yr fee	(2551)
☐ $ _____	7 ½ yr fee	(1552)	☐ $ _____	7 ½ yr fee	(2552)
☐ $ _____	11 ½ yr fee	(1553)	☐ $ _____	11 ½ yr fee	(2553)

MAINTENANCE FEE BEING SUBMITTED $ 490.00

4. SURCHARGE

The surcharge required by 37 CFR 1.20(i)(2) of $ 1,640.00 (Fee Code 1558) must be paid as a condition of accepting unintentionally delayed payment of a maintenance fee.

SURCHARGE FEE BEING SUBMITTED $ 1,640.00

5. MANNER OF PAYMENT

☑ Enclosed is a check for the sum of $ 2,130.00

☐ Please charge Deposit Account No. _____ the sum of $ _____

☐ Payment by credit card. Form PTO-2038 is attached.

6. AUTHORIZATION TO CHARGE ANY FEE DEFICIENCY

☐ The Director is hereby authorized to charge any maintenance fee, surcharge or petition deficiency to Deposit Account No. _____

7. OVERPAYMENT

As to any overpayment made please

OR

☐ Credit to Deposit Account No. _____.

☐ Send refund check

RECEIVED
AUG 20 2009
OFFICE OF PETITIONS

WARNING:

Petitioner/applicant is cautioned to avoid submitting personal information in documents filed in a patent application that may contribute to identity theft. Personal information such as social security numbers, bank account numbers, or credit card numbers (other than a check or credit card authorization form PTO-2038 submitted for payment purposes) is never required by the USPTO to support a petition or an application. If this type of personal information is included in documents submitted to the USPTO, petitioners/applicants should consider redacting such personal information from the documents before submitting them to the USPTO. Petitioner/applicant is advised that the record of a patent application is available to the public after publication of the application (unless a non-publication request in compliance with 37 CFR 1.213(a) is made in the application or issuance of a patent. Furthermore, the record from an abandoned application may also be available to the public if the application is referenced in a published application or an issued patent (see 37 CFR 1.14). Checks and credit card authorization forms PTO-2038 submitted for payment purposes are not retained in the application file and therefore are not publicly available.

8. STATEMENT

The delay in payment of the maintenance fee to this patent was unintentional.

9. PETITIONER(S) REQUEST THAT THE DELAYED PAYMENT OF THE MAINTENANCE FEE BE ACCEPTED AND THE PATENT REINSTATED

Francis I. Gray
Signature(s) of Petitioner(s)

August 5, 2009
Date

Francis I. Gray
Typed or printed name(s)

27,788
Registration Number, if applicable

(503) 636-1952
Telephone Number

P.O. Box 1931
Address

Lake Oswego, OR 97035
Address

37 CFR 1.378(d) states: "Any petition under this section must be signed by an attorney or agent registered to practice before the Patent and Trademark Office, or by the patentee, the assignee, or other party in interest."

ENCLOSURES

☑ Maintenance Fee Payment

☑ Surcharge under 37 CFR 1.20(i)(2) (fee for filing the maintenance fee petition)

☐ _____

SPE RESPONSE FOR CERTIFICATE OF CORRECTION

Paper No.: _____

DATE : 01/19/10

TO SPE OF : ART UNIT 2624

SUBJECT : Request for Certificate of Correction for Appl. No.: 10712657 Patent No.: 7555165

Please respond to this request for a certificate of correction within 7 days.

FOR IFW FILES:

Please review the requested changes/corrections as shown in the **COCIN** document(s) in the IFW application image. No new matter should be introduced, nor should the scope or meaning of the claims be changed.

Please complete the response (see below) and forward the completed response to scanning using document code **COCX**.

FOR PAPER FILES:

Please review the requested changes/corrections as shown in the attached certificate of correction. Please complete this form (see below) and forward it with the file to:

Certificates of Correction Branch (C of C)
Randolph Square 9D40-D
Palm Location 7580

You can fax the Directors/SPE response to 571-270-9990

Lamonte Newsome

Certificates of Correction Branch

703-756-1574

Thank You For Your Assistance

The request for issuing the above-identified correction(s) is hereby:

Note your decision on the appropriate box.

- ☑ **Approved** — **All** changes apply.
- ☐ **Approved in Part** — Specify below which changes **do not** apply.
- ☐ **Denied** — State the reasons for denial below.

Comments: _____

/Bhavesh Mehta/ SPE, TC 2600 1/25/2010

SPE RESPONSE FOR CERTIFICATE OF CORRECTION

SPE Art Unit

UNITED STATES PATENT AND TRADEMARK OFFICE

UNITED STATES DEPARTMENT OF COMMERCE
United States Patent and Trademark Office
Address: COMMISSIONER FOR PATENTS
P.O. Box 1450
Alexandria, Virginia 22313-1450
www.uspto.gov

VIDAS, ARRETT & STEINKRAUS, P.A.
SUITE 400, 6640 SHADY OAK ROAD
EDEN PRAIRIE, MN 55344

Mail Date: 04/21/2010

Applicant	: Francis Bourrieres	: DECISION ON REQUEST FOR
Patent Number	: 7647279	: RECALCULATION of PATENT
Issue Date	: 01/12/2010	: TERM ADJUSTMENT IN VIEW
Appliction No	: 10/712,659	: OF WYETH AND NOTICE OF INTENT TO
Filed	: 11/13/2003	: ISSUE CERTIFICATE OF CORRECTION
		:

The Request for Recalculation is **GRANTED** to the extent indicated.

The patent term adjustment has been determined to be **1285** days. The USPTO will *sua sponte* issue a certificate of correction reflecting the amount of PTA days determined by the recalculation.

Prior to the issuance of the certificate of correction, the USPTO will afford patentee an opportunity to be heard and request reconsideration. Accordingly, patentee has **one month or thirty (30) days**, whichever is longer, to file a request for reconsideration of this patent term adjustment calculation. See 35 U.S.C. 154(b)(3)(B)(ii) and 37 CFR 1.322(a)(4). No extensions of time will be granted under 37 CFR 1.136.

Patentee should use document code PET.OP if electronically filing a request for reconsideration of this patent term adjustment calculation. The patentee must also include the information required by 37 CFR 1.705(b)(2) and the fee required by 37 CFR 1.18(e). If patentee does not file a timely request for reconsideration of this patent term adjustment calculation including the information required by 37 CFR 1.705(b)(2) and the fee required by 37 CFR 1.18(e), the USPTO will issue a certificate of correction reflecting the PTA determination noted above.

Patentee should be aware that in order to preserve the right to review in the United States District Court for the District of Columbia of the USPTO patent term adjustment determination, patentee must ensure that he or she also take the steps required under 35 U.S.C. 154(b)(4)(A) in a timely manner. Nothing in the request for recalculation should be construed as providing an alternative time frame for commencing a civil action under 35 U.S.C. 154(b)(4)(A).

Any questions concerning this decision should be directed to the Office of Patent Legal Administration at 571-272-7702.

UNITED STATES PATENT AND TRADEMARK OFFICE

Commissioner for Patents
United States Patent and Trademark Office
P.O. Box 1450
Alexandria, VA 22313-1450
www.uspto.gov

E I DU PONT DE NEMOURS AND COMPANY
LEGAL PATENT RECORDS CENTER
BARLEY MILL PLAZA 25/1128
4417 LANCASTER PIKE
WILMINGTON DE 19805

COPY MAILED

FEB 0 5 2007

OFFICE OF PETITIONS

In re Application of :
Cho, et al. :
Application No. 10/712,670 : ON PETITION
Filed: November 13, 2003 :
Attorney Docket No. EL0519USNA :
For: THICK FILM GETTER PASTE COMPOSITIONS FOR USE IN MOISTURE CONTROL

This is a decision on the petition under 37 CFR 1.137(b), filed May 26, 2006, to revive the above-identified application.

The above-identified application became abandoned for failure to reply to the non-final Office action mailed November 17, 2005, which set a shortened statutory period for reply of three (3) months. No proper extensions of time under the provisions of 37 CFR 1.136(a) were obtained. Accordingly, the application became abandoned on February 18, 2006 for failure to reply. A Notice of Abandonment was mailed on June 6, 2006.

Petitioners have submitted an amendment and terminal disclaimers in reply to the November 17, 2005 non-final Office action, an acceptable statement of the unintentional nature of the delay in responding to the November 17, 2005 non-final Office action, and the required petition fee.

The petition is **GRANTED**.

Pursuant to 37 CFR 1.136, an extension of time must be filed prior to the expiration of the maximum period obtainable for reply to avoid abandonment. Accordingly, since the $ 1,020.00 extension of time submitted with the petition on May 26, 2006 was filed subsequent to the maximum period obtainable for reply, this fee is unnecessary and will be credited to petitioners' deposit account.

The application file is being forwarded to Technology Center AU 1714 for consideration of the amendment filed on May 26, 2006.

Telephone inquiries concerning this decision should be directed to the undersigned at (571) 272-3230.

Shirene Willis Brantley
Senior Petitions Attorney
Office of Petitions

UNITED STATES PATENT AND TRADEMARK OFFICE

UNITED STATES DEPARTMENT OF COMMERCE
United States Patent and Trademark Office
Address: COMMISSIONER FOR PATENTS
P.O. Box 1450
Alexandria, Virginia 22313-1450
www.uspto.gov

SIEMENS CORPORATION
INTELLECTUAL PROPERTY DEPARTMENT
170 WOOD AVENUE SOUTH
ISELIN, NJ 08830

Mail Date: 04/26/2010

Applicant	: Frederick Wilkins	: DECISION ON REQUEST FOR
Patent Number	: 7582198	: RECALCULATION of PATENT
Issue Date	: 09/01/2009	: TERM ADJUSTMENT IN VIEW
Application No	: 10/712,674	: OF WYETH AND NOTICE OF INTENT TO
Filed	: 11/13/2003	: ISSUE CERTIFICATE OF CORRECTION
		:

The Request for Recalculation is **GRANTED** to the extent indicated.

The patent term adjustment has been determined to be **1191** days. The USPTO will *sua sponte* issue a certificate of correction reflecting the amount of PTA days determined by the recalculation.

Prior to the issuance of the certificate of correction, the USPTO will afford patentee an opportunity to be heard and request reconsideration. Accordingly, patentee has **one month or thirty (30) days**, whichever is longer, to file a request for reconsideration of this patent term adjustment calculation. See 35 U.S.C. 154(b)(3)(B)(ii) and 37 CFR 1.322(a)(4). No extensions of time will be granted under 37 CFR 1.136.

Patentee should use document code PET.OP if electronically filing a request for reconsideration of this patent term adjustment calculation. The patentee must also include the information required by 37 CFR 1.705(b)(2) and the fee required by 37 CFR 1.18(e). If patentee does not file a timely request for reconsideration of this patent term adjustment calculation including the information required by 37 CFR 1.705(b)(2) and the fee required by 37 CFR 1.18(e), the USPTO will issue a certificate of correction reflecting the PTA determination noted above.

Patentee should be aware that in order to preserve the right to review in the United States District Court for the District of Columbia of the USPTO patent term adjustment determination, patentee must ensure that he or she also take the steps required under 35 U.S.C. 154(b)(4)(A) in a timely manner. Nothing in the request for recalculation should be construed as providing an alternative time frame for commencing a civil action under 35 U.S.C. 154(b)(4)(A).

Any questions concerning this decision should be directed to the Office of Patent Legal Administration at 571-272-7702.

UNITED STATES PATENT AND TRADEMARK OFFICE

COMMISSIONER FOR PATENTS
UNITED STATES PATENT AND TRADEMARK OFFICE
P.O. BOX 1450
ALEXANDRIA, VA 22313-1450
www.uspto.gov
DIW Oct-06

LEE, HONG, DEGERMAN, KANG & SCHMADEKA
801 S. FIGEUROA ST, 12TH FLOOR
LOS ANGELES CA 90014

COPY MAILED
OCT 19 2006
OFFICE OF PETITIONS

In re Application of :
Cho et al. :
Application No. 10/712,676 : ON PETITION
Filed: 16 July, 2004 :
Attorney Docket No. 2080-3-195 :
:

This is a decision in reference to the petition filed on 31 July, 2006, to withdraw the holding of abandonment.

The petition is **GRANTED**.

This application was held abandoned on 8 December, 2005, for failure to submit a timely response to the non-final Office action requiring restriction and/or election mailed on 7 November, 2005, which set a one (1)-month shortened statutory period for reply. No extensions of the time for reply in accordance with 37 CFR 1.136(a) were obtained. Notice of Abandonment was mailed on 31 May, 2006.

Petitioners assert that the Office action mailed on 7 November, 2005, was not timely received because it was not mailed to the correct address. Specifically, petitioners assert that it was mailed to counsel's previous address of 221 North Figueroa St, 11th Floor, Los Angeles, CA 90012 ("the North Figueroa address"), rather than the then-current correspondence address of 801 South Figueroa St, 14th Floor, Los Angeles, CA 90017 ("the South Figueroa address").

Petitioners further aver that the application papers as filed listed the South Figueroa address as the correspondence address.

A review of the record reveals that on 13 November, 2003, the instant application was filed, with the transmittal letter listing the South Figueroa address. Additionally, a declaration under 37 CFR 1.63 was filed, appointing Jonathan Y. Kang, Richard

K. Yoon, Edward Gray, David N. Makous, and John S. Christopher as attorneys of record and stating that all correspondence should be addressed to the North Figueroa address.

Additionally, on 13 November, 2003, petitioners filed an Associate Power of Attorney appointing F. Jason Far-Hadian and Amit Sheth as associate attorneys, signed by attorney Kang, and listing the South Figueroa address as the correspondence address.

MPEP 403.01 states:

> Where the attorneys bear relation of principal attorney and associate attorney, the correspondence will be had with the associate attorney unless the principal attorney directs otherwise. *Ex parte Eggan*, 1911 C.D. 213, 172 O.G. 1091 (Comm'r Pat. 1911). The associate attorney may specify or change the correspondence address to which communications about the application are to be directed. Associate powers of attorney are not accepted after June 25, 2004, but any associate power of attorney filed before June 25, 2004 will continue to have effect.

As the Associate Power of Attorney was filed prior to 25 June, 2004, and directs the Office to send correspondence to the South Figueroa address, the Office erred in sending the Office action to the North Figueroa address.

As such, the showing of record is that there was an irregularity in the mailing of the Office action mailed on 7 November, 2005, in that said Office communication was not mailed to the proper address.

The Office apologizes for any inconvenience to petitioner.

Accordingly, the Notice of Abandonment is hereby vacated and the holding of abandonment withdrawn.

As petitioner has filed a response to the Office action mailed on 7 November, 2005, with the present petition, remailing of the Office action is unnecessary. Rather, the response filed with the petition is being treated as timely filed.

The application is being referred to Technology Center Art Unit 3753 for further processing.

Telephone inquiries concerning this matter may be directed to the undersigned at (571) 272-3231.

Douglas I. Wood
Senior Petitions Attorney
Office of Petitions

UNITED STATES PATENT AND TRADEMARK OFFICE

Commissioner for Patents
United States Patent and Trademark Office
P.O. Box 1450
Alexandria, VA 22313-1450
www.uspto.gov

Attn: Charles M. Cox
Akin Gump Strauss Hauer & Feld, LLP
1900 Pennzoil Place - South Tower
711 Louisiana Street
Houston, TX 77002

COPY MAILED

AUG 17 2004

OFFICE OF PETITIONS

In re Application of	:	
Jeffrey L. Lacy	:	
Application No. 10/712,692	:	DECISION GRANTING PETITION
Filed: November 13, 2003	:	
Attorney Docket No.	:	
H054024.0012US0	:	

This is a decision on the petition filed May 28, 2004, requesting that the above-identified application be accorded a filing date of November 13, 2003.

On November 13, 2003, applicant deposited the above-identified application. On June 15, 2004, the Office of Initial Patent Examination mailed a "Notice of Incomplete Nonprovisional Application," stating that the application had not been accorded a filing date as the application was deposited without any drawings and that the filing date would be the date of receipt of the omitted items.

In response, on May 28, 2004, applicant filed the present petition, the petition fee, and a copy of applicant's postcard receipt acknowledging receipt of 11 sheets of drawings. Additionally, applicant submitted a copy of 11 sheets of drawings.

Upon review of the record, 11 sheets of drawing, deposited on November 13, 2003, have not been located among the application papers. However, the evidence is convincing that the application papers deposited on November 13, 2003, included 11 sheets of drawing, which were subsequently misplaced in the United States Patent and Trademark Office. Therefore, the application, including the 11 sheets of drawings, was complete on filing and will be granted a filing date of November 13, 2003.

Accordingly, the petition is granted.

The requirement to submit drawings set forth in the Notice of June 15, 2004, was sent in error and is hereby vacated. Accordingly, the $130.00 petition fee is unnecessary and will be credited to Deposit Account No. 16-2435.

The Office of Initial Patent Examination is directed to accord the above-identified application a filing date of November 13, 2003, using the 11 sheets of drawings submitted on petition, and to mail a corrected filing receipt. The Office records should indicate that 11 sheets of drawings were submitted on filing.

Any inquiries related to this decision should be directed to the undersigned at (703) 306-5589.

Christina Tartera Donnell

Christina Tartera Donnell
Senior Petitions Attorney
Office of Petitions

UNITED STATES PATENT AND TRADEMARK OFFICE

UNITED STATES DEPARTMENT OF COMMERCE
United States Patent and Trademark Office
Address: COMMISSIONER FOR PATENTS
P.O. Box 1450
Alexandria, Virginia 22313-1450
www.uspto.gov

COLLARD & ROE, P.C.
1077 NORTHERN BOULEVARD
ROSLYN, NY 11576

Mail Date: 04/21/2010

Applicant	: Marlies Regiert	: DECISION ON REQUEST FOR
Patent Number	: 7667057	: RECALCULATION of PATENT
Issue Date	: 02/23/2010	: TERM ADJUSTMENT IN VIEW
Appliction No	: 10/712,703	: OF WYETH AND NOTICE OF INTENT TO
Filed	: 11/12/2003	: ISSUE CERTIFICATE OF CORRECTION
		:

The Request for Recalculation is **GRANTED** to the extent indicated.

The patent term adjustment has been determined to be **867** days. The USPTO will *sua sponte* issue a certificate of correction reflecting the amount of PTA days determined by the recalculation.

Prior to the issuance of the certificate of correction, the USPTO will afford patentee an opportunity to be heard and request reconsideration. Accordingly, patentee has **one month or thirty (30) days**, whichever is longer, to file a request for reconsideration of this patent term adjustment calculation. See 35 U.S.C. 154(b)(3)(B)(ii) and 37 CFR 1.322(a)(4). No extensions of time will be granted under 37 CFR 1.136.

Patentee should use document code PET.OP if electronically filing a request for reconsideration of this patent term adjustment calculation. The patentee must also include the information required by 37 CFR 1.705(b)(2) and the fee required by 37 CFR 1.18(e). If patentee does not file a timely request for reconsideration of this patent term adjustment calculation including the information required by 37 CFR 1.705(b)(2) and the fee required by 37 CFR 1.18(e), the USPTO will issue a certificate of correction reflecting the PTA determination noted above.

Patentee should be aware that in order to preserve the right to review in the United States District Court for the District of Columbia of the USPTO patent term adjustment determination, patentee must ensure that he or she also take the steps required under 35 U.S.C. 154(b)(4)(A) in a timely manner. Nothing in the request for recalculation should be construed as providing an alternative time frame for commencing a civil action under 35 U.S.C. 154(b)(4)(A).

Any questions concerning this decision should be directed to the Office of Patent Legal Administration at 571-272-7702.

UNITED STATES PATENT AND TRADEMARK OFFICE

Commissioner for Patents
United States Patent and Trademark Office
P.O. Box 1450
Alexandria, VA 22313-1450
www.uspto.gov

FARSHID H. ASVADI
PO BOX 24886
LEXINGTON KY 40524

COPY MAILED

FEB 13 2009

OFFICE OF PETITIONS

In re Application of

Farshid H. Asvadi :

Application No. 10/712,719

: DECISION ON PETITION

Filed: November 13, 2003

:

Attorney Docket No.

This is a decision on the petition under 37 CFR 1.137(b), filed, January 13, 2009, to revive the above-identified application.

The petition is **GRANTED**.

The above-cited application became abandoned for failure to reply in a timely and proper manner to the final Office action mailed July 5, 2006, which set a shortened statutory period for reply of three (3) months from its mailing date. No extension of time pursuant to 37 CFR 1.136(a) was obtained within the allowable period. Accordingly, the application became abandoned on September 6, 2006. A Notice of Abandonment was mailed February 1, 2007.

The continuation-in-part application 11/650,078 filed January 5, 2007, is noted.

The subject application is revived for continuity purposes. Continuity having been established, the subject application is again abandoned in favor of application 11/650,078.

Telephone inquiries concerning this decision should be directed to the undersigned at (571) 272-3222.

Kenya A. McLaughlin
Petitions Attorney
Office of Petitions

SPE RESPONSE FOR CERTIFICATE OF CORRECTION

Paper No.: _____

DATE : 1-12-07

TO SPE OF : ART UNIT 2151

SUBJECT : Request for Certificate of Correction on Patent No.: 7136936 B2 (10/712748

A response is requested with respect to the accompanying request for a certificate of correction.

Please complete this form and return with file, within 7 days to:
Palm location **7580, Certificates of Correction Branch – South Tower – 9A22**
If response is for an IFW, **return to employee (named below) via PUBSCofC Team in MADRAS.**
With respect to the change(s) requested, correcting Office and/or Applicant's errors, should the patent read as shown in the certificate of correction (COCIN)? No new matter should be introduced, nor should the scope or meaning of the claims be changed.

Eva James

Thank You For Your Assistance

Certificates of Correction Branch
Tel. No. 703-305-8309

The request for issuing the above-identified correction(s) is hereby:
Note your decision on the appropriate box.

☑ **Approved** JOHN WALSH PRIMARY EXAMINER **All** changes apply.

☐ **Approved in Part** Specify below which changes **do not** apply.

☐ **Denied** State the reasons for denial below.

Comments:

The changes requested by the applicant do not change the scope of the claims.

ZARNI MAUNG
SUPERVISORY PATENT EXAMINER

SPE

2151
Art Unit

UNITED STATES PATENT AND TRADEMARK OFFICE

Commissioner for Patents
United States Patent and Trademark Office
P. O. Box 1450
Alexandria, VA 22313-1450
www. uspto. gov

EXXONMOBIL CHEMICAL COMPANY
LAW TECHNOLOGY
P.O. BOX 2149
BAYTOWN, TX 77522-2149

COPY MAILED

JAN 2 1 2005

OFFICE OF PETITIONS

In re Application of :
Jan Cyriel Donck :
Application No. 10/712,750 : ON PETITION
Filed: November 12, 2003 :
Attorney Docket No. 2001B118A :

This is a decision on the petition under 37 CFR 1.137(b), filed December 10, 2004, to revive the above-identified application.

The petition is **GRANTED**.

The above-identified application became abandoned for failure submit the Issue fee in a timely manner in reply to the Notice of Allowance mailed August 26, 2004, which set a statutory period for reply of three (3) months. Accordingly, the above-identified application became abandoned on November 27, 2004.

Telephone inquiries concerning this decision should be directed to Irvin Dingle at (571) 272-3210.

This matter is being forwarded to the Publishing Division.

Irvin Dingle
Petitions Examiner
Office of Petitions
Office of the Deputy Commissioner
for Patent Examination Policy

UNITED STATES PATENT AND TRADEMARK OFFICE

Commissioner for Patents
United States Patent and Trademark Office
P.O. Box 1450
Alexandria, VA 22313-1450
www.uspto.gov

COOLEY GODWARD KRONISH LLP
3000 EL CAMINO REAL
5 PALO ALTO SQUARE
PALO ALTO CA 94306

COPY MAILED

JAN 0 8 2007

OFFICE OF PETITIONS

In re Application of
James R. Mault
Application No. 10/712,760
Filed: November 12, 2003
Attorney Docket No. HTEC-008/04US

DECISION ON PETITION
TO WITHDRAW
FROM RECORD

This is a decision on the Request to Withdraw as attorney or agent of record under 37 C.F.R. § 1.36(b) filed September 29, 2006.

The request is **APPROVED**.

A grantable request to withdraw as attorney/agent of record must be signed by every attorney/agent seeking to withdraw or contain a clear indication that one attorney is signing on behalf of another/others. A request to withdraw will not be approved unless at least 30 (thirty) days would remain between the date of approval and the later of the expiration date of a time to file a response or the expiration date of the maximum time period which can be extended under 37 C.F.R. § 1.136(a).

The request was signed by Cliff Z. Liu on behalf of all attorneys of record who are associated with customer No. 23419.

All attorneys/agents associated with the Customer Number 23419 have been withdrawn.

Applicant is reminded that there is no attorney of record at this time.

The request to change the correspondence of record is not acceptable as the requested correspondence address is not that of: (1) the first named signing inventor; or (2) an intervening assignee of the entire interest under 37 C.F.R 3.71. All future communications from the Office will be directed to the assignee of the entire interest at the first copied address below until otherwise properly notified by the applicant.

There is an outstanding Office action mailed August 10, 2006 that requires a reply from the applicant.

Telephone inquiries concerning this decision should be directed to undersigned at 571-272-1642.

April M. Wise
Petitions Examiner
Office of Petitions

cc: EDWIN M. PEARCE
HEALTHETECH, INC
523 PARK POINT DRIVE
GOLDEN, CO 80401

cc: GEOFFREY STANIFORD
COURTNEY STANIFORD & GREGORY, LLP
10001 N. DE ANZA BLVD
SUITE 300
CUPERTINO, CA 95014

UNITED STATES PATENT AND TRADEMARK OFFICE

UNITED STATES DEPARTMENT OF COMMERCE
United States Patent and Trademark Office
Address: COMMISSIONER FOR PATENTS
P.O. Box 1450
Alexandria, Virginia 22313-1450
www.uspto.gov

APPLICATION NUMBER	FILING OR 371 (c) DATE	FIRST NAMED APPLICANT	ATTY. DOCKET NO./TITLE
10/712,760	11/12/2003	James R. Mault	HTEC-008/04US

CONFIRMATION NO. 7394

OC000000021809618

OC000000021809618

23419
COOLEY GODWARD KRONISH LLP
3000 EL CAMINO REAL
5 PALO ALTO SQUARE
PALO ALTO, CA 94306

Date Mailed: 01/03/2007

NOTICE REGARDING CHANGE OF POWER OF ATTORNEY

This is in response to the Power of Attorney filed 09/29/2006.

- The withdrawal as attorney in this application has been accepted. Future correspondence will be mailed to the new address of record. 37 CFR 1.33.

APRIL M WISE
OP (571) 272-1642

FORMER ATTORNEY/AGENT COPY

UNITED STATES PATENT AND TRADEMARK OFFICE

Commissioner for Patents
United States Patent and Trademark Office
P.O. Box 1450
Alexandria, VA 22313-1450
www.uspto.gov

January 15, 2009

Lam P. Doan
Fountainhead Law Group P.C.
900Lafayette Street, Suite 509
Santa Clara, CA 95050

Patent No.: 7,412,658 B2
Application No.: 10/712,771
Inventor(s): Yuval Gilboa
Issued: August 12, 2008
Title: **MODELING SYSTEM FOR GRAPHIC USER INTERFACE**

Re: Request for Certificate of Correction

Consideration has been given your request for the issuance of a certificate of correction for the above-identified patent under the provisions of Rule(s) 1.322 and/or 1.323.

Assignees' names and addresses (assignment data) printed in a patent, are based *solely* on information supplied in the appropriate space for identifying the assignment data, i.e., item 3 of the Issue Fee Transmittal Form PTOL-85B. Granting of a request under 37 CFR 3.81(b) is required to correct applicant's error providing ***incorrect or erroneous*** assignment data, *before* issuance of a Certificate of Correction, under 37 CFR 1.323 *(see Manual of Patent Examining Procedures (M.P.E.P) Chp.1400, sect. 1481).* This procedure is required *at any time after the issue fee is paid*, including after issuance of the patent.

In view of the foregoing, your request, in this matter, is hereby denied.

A request to correct the Assignee under 37 CFR 3.81(b) should include:

A. **the processing fee set forth in 37 CFR 1.117(h) (currently $130);**
B. a statement that the failure to include the correct assignee name on the PTOL-85B was inadvertent; and
C. a copy of the Notice of Recordation of Assignment Document, reflecting the reel and frame number where the assignment(s) is recorded and/or reflecting proof of *the date* the assignment was submitted for recordation.

In the Request, Applicant(s) may request that the file be forwarded to Certificates of Correction Branch, for issuance of a Certificate of Correction, if the Request is granted.

Any request under 37 CFR 3.81(b) should be directed to the following address or facsimile number:

By mail:	Mail Stop PETITIONS Commissioner for Patents Post Office Box 1450 Alexandria, VA 22313-1450
By hand:	Customer Service Window Mail Stop Petitions Randolph Building 401 Dulany Street Alexandria, VA 22314
By fax:	(571) 273-0025 ATTN: Office of Petitions

If a fee (currently $100) was previously submitted for consideration of a Request for Certificate of Correction, under CFR 1.323, to correct assignment data, no additional fee is required.

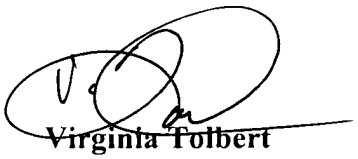

Virginia Tolbert
For Mary Diggs, Supervisor
Decisions & Certificate of Correction Branch
(703) 305-8309 or (703) **308-9390 ext 113**

vt

UNITED STATES PATENT AND TRADEMARK OFFICE

UNITED STATES DEPARTMENT OF COMMERCE
United States Patent and Trademark Office
Address: COMMISSIONER FOR PATENTS
P.O. Box 1450
Alexandria, Virginia 22313-1450
www.uspto.gov

APPL NO.	FILING OR 371 (c) DATE	ART UNIT	FIL FEE REC'D	ATTY.DOCKET NO	DRAWINGS	TOT CLMS	IND CLMS
10/712,790	11/13/2003	3728	1170	ADI-098	5	35	3

CONFIRMATION NO. 7808

CORRECTED FILING RECEIPT

OC000000020101027

51414
GOODWIN PROCTER LLP
PATENT ADMINISTRATOR
EXCHANGE PLACE
BOSTON, MA 02109-2881

Date Mailed: 08/18/2006

Receipt is acknowledged of this regular Patent Application. It will be considered in its order and you will be notified as to the results of the examination. Be sure to provide the U.S. APPLICATION NUMBER, FILING DATE, NAME OF APPLICANT, and TITLE OF INVENTION when inquiring about this application. Fees transmitted by check or draft are subject to collection. Please verify the accuracy of the data presented on this receipt. **If an error is noted on this Filing Receipt, please mail to the Commissioner for Patents P.O. Box 1450 Alexandria Va 22313-1450. Please provide a copy of this Filing Receipt with the changes noted thereon. If you received a "Notice to File Missing Parts" for this application, please submit any corrections to this Filing Receipt with your reply to the Notice. When the USPTO processes the reply to the Notice, the USPTO will generate another Filing Receipt incorporating the requested corrections (if appropriate).**

Applicant(s)

Allen W. Van Noy, Weisendorf, GERMANY;
Gerd Rainer Manz, Weisendorf, GERMANY;

Assignment For Published Patent Application

adidas International Marketing B.V., Amsterdam, NETHERLANDS

Power of Attorney: The patent practitioners associated with Customer Number **021323**.

Domestic Priority data as claimed by applicant

Foreign Applications

GERMANY 10255094.8 11/26/2002
If Required, Foreign Filing License Granted: 02/11/2004

The country code and number of your priority application, to be used for filing abroad under the Paris Convention, is US10/712,790

Projected Publication Date: Not Applicable

Non-Publication Request: No

Early Publication Request: No

Title

SHOE VENTILATION SYSTEM

Preliminary Class

036

PROTECTING YOUR INVENTION OUTSIDE THE UNITED STATES

Since the rights granted by a U.S. patent extend only throughout the territory of the United States and have no effect in a foreign country, an inventor who wishes patent protection in another country must apply for a patent in a specific country or in regional patent offices. Applicants may wish to consider the filing of an international application under the Patent Cooperation Treaty (PCT). An international (PCT) application generally has the same effect as a regular national patent application in each PCT-member country. The PCT process **simplifies** the filing of patent applications on the same invention in member countries, but **does not result** in a grant of "an international patent" and does not eliminate the need of applicants to file additional documents and fees in countries where patent protection is desired.

Almost every country has its own patent law, and a person desiring a patent in a particular country must make an application for patent in that country in accordance with its particular laws. Since the laws of many countries differ in various respects from the patent law of the United States, applicants are advised to seek guidance from specific foreign countries to ensure that patent rights are not lost prematurely.

Applicants also are advised that in the case of inventions made in the United States, the Director of the USPTO must issue a license before applicants can apply for a patent in a foreign country. The filing of a U.S. patent application serves as a request for a foreign filing license. The application's filing receipt contains further information and guidance as to the status of applicant's license for foreign filing.

Applicants may wish to consult the USPTO booklet, "General Information Concerning Patents" (specifically, the section entitled "Treaties and Foreign Patents") for more information on timeframes and deadlines for filing foreign patent applications. The guide is available either by contacting the USPTO Contact Center at 800-786-9199, or it can be viewed on the USPTO website at http://www.uspto.gov/web/offices/pac/doc/general/index.html.

For information on preventing theft of your intellectual property (patents, trademarks and copyrights), you may wish to consult the U.S. Government website, http://www.stopfakes.gov. Part of a Department of Commerce initiative, this website includes self-help "toolkits" giving innovators guidance on how to protect intellectual property in specific countries such as China, Korea and Mexico. For questions regarding patent enforcement issues, applicants may call the U.S. Government hotline at 1-866-999-HALT (1-866-999-4158).

LICENSE FOR FOREIGN FILING UNDER
Title 35, United States Code, Section 184
Title 37, Code of Federal Regulations, 5.11 & 5.15

GRANTED

The applicant has been granted a license under 35 U.S.C. 184, if the phrase "IF REQUIRED, FOREIGN FILING LICENSE GRANTED" followed by a date appears on this form. Such licenses are issued in all applications where the conditions for issuance of a license have been met, regardless of whether or not a license may be required as set forth in 37 CFR 5.15. The scope and limitations of this license are set forth in 37 CFR 5.15(a) unless an earlier license has been issued under 37 CFR 5.15(b). The license is subject to revocation upon written notification. The date indicated is the effective date of the license, unless an earlier license of similar scope has been granted under 37 CFR 5.13 or 5.14.

This license is to be retained by the licensee and may be used at any time on or after the effective date thereof unless it is revoked. This license is automatically transferred to any related applications(s) filed under 37 CFR 1.53(d). This license is not retroactive.

The grant of a license does not in any way lessen the responsibility of a licensee for the security of the subject matter as imposed by any Government contract or the provisions of existing laws relating to espionage and the national security or the export of technical data. Licensees should apprise themselves of current regulations especially with respect to certain countries, of other agencies, particularly the Office of Defense Trade Controls, Department of State (with respect to Arms, Munitions and Implements of War (22 CFR 121-128)); the Bureau of Industry and Security, Department of Commerce (15 CFR parts 730-774); the Office of Foreign Assets Control, Department of Treasury (31 CFR Parts 500+) and the Department of Energy.

NOT GRANTED

No license under 35 U.S.C. 184 has been granted at this time, if the phrase "IF REQUIRED, FOREIGN FILING LICENSE GRANTED" DOES NOT appear on this form. Applicant may still petition for a license under 37 CFR 5.12, if a license is desired before the expiration of 6 months from the filing date of the application. If 6 months has lapsed from the filing date of this application and the licensee has not received any indication of a secrecy order under 35 U.S.C. 181, the licensee may foreign file the application pursuant to 37 CFR 5.15(b).

UNITED STATES PATENT AND TRADEMARK OFFICE

Commissioner for Patents
United States Patent and Trademark Office
P.O. Box 1450
Alexandria, VA 22313-1450
www.uspto.gov

Howrey LLP
C/O IP Docketing Department
2941 Fairview Park Drive, Suite 200
Falls Church VA 22042-2924

COPY MAILED

SEP 29 2006

OFFICE OF PETITIONS

In re Patent No. 6,987,707 :
Issue Date: January 17, 2006 :
Application No. 10/712,805 : ON PETITION
Filed: November 13, 2003 :
Attorney Docket No. 02708.0147.NPUS00 :

This is a decision on the request under 37 CFR 3.81(b), filed June 2, 2006, to correct the assignment information on the front page of the above-identified patent by way of a Certificate of Correction.

The request is **granted**.

The matter is being referred to the Certificate of Correction Branch to issue the Certificate of Correction.

Telephone inquiries concerning this matter may be directed to the undersigned at (571) 272-3211. Any questions concerning the issuance of the Certificate of Correction should be directed to the Certificate of Correction Branch.

Christina T. Donnell

Christina Tartera Donnell
Senior Petitions Attorney
Office of Petitions

UNITED STATES PATENT AND TRADEMARK OFFICE

Commissioner for Patents
United States Patent and Trademark Office
P.O. Box 1450
Alexandria, VA 22313-1450
www.uspto.gov

COPY MAILED

JUN 15 2007

OFFICE OF PETITIONS

RAYMOND R. MOSER JR., ESQ.
MOSER IP LAW GROUP
1040 BROAD STREET
2ND FLOOR
SHREWSBURY NJ 07702

In re Patent No. 6,992,617 :
Issue Date: January 31, 2006 :
Application No. 10/712,807 : NOTICE
Filed: November 13, 2003 :
Attorney Docket No. GLBL/041 :

This is a notice regarding your request for acceptance of a fee deficiency submission under 37 CFR 1.28 filed May 18, 2007. On September 1, 1998, the Court of Appeals for the Federal Circuit held that 37 CFR 1.28(c) is the sole provision governing the time for correction of the erroneous payment of the issue fee as a small entity. **See DH Technology v. Synergystex International, Inc. 154 F.3d 1333, 47 USPQ2d 1865 (Fed. Cir. Sept. 1, 1998).**

The Office no longer investigates or rejects original or reissue applications under 37 CFR 1.56. **1098 Off. Gaz. Pat. Office 502 (January 3, 1989)**. Therefore, nothing in this Notice is intended to imply that an investigation was done.

Your fee deficiency submission under 37 CFR 1.28 is hereby **ACCEPTED**.

This application is no longer entitled to small entity status. Accordingly, all future fees paid in this application must be paid at the large entity rate.

Inquiries related to this communication should be directed to the undersigned at (571) 272-3215.

Charlema R. Grant

Charlema R. Grant
Petitions Attorney
Office of Petitions

UNITED STATES PATENT AND TRADEMARK OFFICE

COMMISSIONER FOR PATENTS
UNITED STATES PATENT AND TRADEMARK OFFICE
P.O. BOX 1450
ALEXANDRIA, VA 22313-1450
www.uspto.gov

WELLS ST. JOHN P.S.
601 W. FIRST AVENUE
SUITE 1300
SPOKANE, WA 99201

COPY MAILED

NOV 17 2005

OFFICE OF PETITIONS

In re Application of :
Lane A. Bray et al :
Application No. 10/712,820 : DECISION ON PETITION
Filed: November 12, 2003 : TO MAKE SPECIAL UNDER
Attorney Docket No. IS6-001 : 37 C.F.R. § 1.102(d)
:

This is a decision on the petition under 37 CFR 1.102(d), filed on October 13, 2005, to make the above-identified application special based on developing treatments and cures for HIV/AIDS or cancer as set forth in M.P.E.P. § 708.02, Section X.

The petition is **GRANTED**.

A grantable petition to make an application special under 37 CFR 1.102(d) and MPEP § 708.02, Section X: Inventions Relating to HIV/AIDS or cancer, must be accompanied by (1) the petition fee under 37 CFR 1.17(h); and (2) a satisfactory statement explaining how the invention contributes to the diagnosis, treatment or prevention of HIV/AIDS or cancer.

The instant petition meets the requirements of MPEP § 708.02(X). Accordingly, the above-identified application has been accorded "special" status.

Telephone inquiries concerning this decision should be directed to Wan Laymon at 571-272-3220.

All other inquiries concerning either the examination or status of the application should be directed to the Technology Center.

This matter is being referred to Technology Center AU 3735 for action on the merits commensurate with this decision.

Amelia Au
Petitions Examiner
Office of Petitions

UNITED STATES PATENT AND TRADEMARK OFFICE

Commissioner for Patents
United States Patent and Trademark Office
P.O. Box 1450
Alexandria, VA 22313-1450
www.uspto.gov

AVERILL & VARN
8244 PAINTER AVE.
WHITTIER CA 90602

COPY MAILED

DEC 0 7 2005

OFFICE OF PETITIONS

In re Application of	:	
Barth et al.	:	
Application No. 10/712,834	:	DECISION GRANTING PETITION
Filed: November 12, 2003	:	UNDER 37 CFR 1.137(b)
Attorney Docket No. 135/145	:	

This is a decision on the petition, filed November 9, 2005, which is being treated as a petition under 37 CFR 1.137(b) to revive the instant non-provisional application for failure to timely notify the U.S. Patent and Trademark (USPTO) of the filing of an application in a foreign country, or under a multinational treaty that requires publication of applications eighteen months after filing. *See* 37 CFR 1.137(f).

The petition is **GRANTED**.

Petitioner states that the instant nonprovisional application is the subject of an application filed in an eighteen-month publication country on November 10, 2004. However, the USPTO was unintentionally not notified of this filing within 45 days subsequent to the filing of the subject application in an eighteen-month publication country.

In view of the above, this application became abandoned pursuant to 35 U.S.C. § 122(b)(2)(B)(iii) and 37 CFR 1.213(c) for failure to timely notify the Office of the filing of an application in a foreign country or under a multilateral international agreement that requires publication of applications 18 months after filing.

A petition to revive an application abandoned pursuant to 35 U.S.C. 122(b)(2)(B)(iii) for failure to notify the USPTO of a foreign filing must be accompanied by:

(1) the required reply which is met by the notification of such filing in a foreign country or under a multinational treaty;
(2) the petition fee as set forth in 37 CFR 1.17(m); and
(3) a statement that the entire delay in filing the required reply from the due date of the reply until the filing of a grantable petition was unintentional.

The instant petition has been found to be in compliance with 37 CFR 1.137(b). Accordingly, the failure to timely notify the USPTO of a foreign or international filing within 45 days after the date of filing of such foreign or international application as provided by 35 U.S.C. § 122(b)(2)(B)(iii) and 37 CFR 1.213(c) is accepted as having been unintentionally delayed.

The previous Request and Certification under 35 U.S.C. § 122(b)(2)(B)(i) has been rescinded. A Notice Regarding Rescission of Nonpublication Request which sets forth the projected publication date of March 16, 2006, accompanies this decision on petition.

This matter is being referred to Technology Center Art Unit 3737 for examination in due course.

Telephone inquiries concerning this decision should be directed to the undersigned at (571) 272-3206.

LianaChase

Liana Chase
Petitions Examiner
Office of Petitions

ATTACHMENT: Notice Regarding Rescission of Nonpublication Request

UNITED STATES PATENT AND TRADEMARK OFFICE

Commissioner for Patents
United States Patent and Trademark Office
P.O. Box 1450
Alexandria, VA 22313-1450
www.uspto.gov

RANDY J. PRITZKER
WOLF GREENFIELD & SACKS, P.C.
600 ATLANTIC AVENUE
BOSTON, MA 02210

COPY MAILED

FEB 16 2007

OFFICE OF PETITIONS

In re Application of :
Juan Esteban Flores et al :
Application No. 10/712,852 : ON PETITION
Filed: November 13, 2003 :
Attorney Docket No. L0562.70016US01 :

This is a decision on the petition under 37 CFR 1.137(b), filed September 19, 2006, to revive the above-identified application.

The petition is **GRANTED.**

The above-identified application became abandoned for failure to submit the Issue fee and Publication fee in a timely manner in reply to the Notice of Allowance mailed June 8, 2006, which set a statutory period for reply of three (3) months. Accordingly, the above-identified application became abandoned on September 9, 2006.

The petition satisfies the conditions for revival pursuant to the provisions of 37 CFR 1.137(b) in that (1) the reply in the form of payment of the Issue fee and Publication fee; (2) the petition fee; and (3) the required statement of unintentional delay have been received. Accordingly, the issue fee is accepted as having been unintentionally delayed.

Telephone inquiries concerning this decision should be directed to the undersigned at (571) 272-3210.

This matter is being referred to the Publishing Division for further processing.

Irvin Dingle
Petitions Examiner
Office of Petitions

UNITED STATES PATENT AND TRADEMARK OFFICE

Commissioner for Patents
United States Patent and Trademark Office
P. O. Box 1450
Alexandria, VA 22313-1450
www.uspto.gov

INTEL CORPORATION
C/O INTELLEVATE, LLC
P.O. BOX 52050
MINNEAPOLIS, MN 55402

COPY MAILED

JUL 21 2008

OFFICE OF PETITIONS

In re Application of :
Thomas L. Stachura et al :
Application No. 10/712,854 : ON PETITION
Filed: November 12, 2003 :
Attorney Docket No. 42390P7040C :

This is a decision on the petition under 37 CFR 1.137(b), filed February 29, 2008, to revive the above-identified application.

The petition is **GRANTED**.

The above-identified application became abandoned for failure to reply in a timely manner to the non-final Office action mailed August 24, 2007, which set a shortened statutory period for reply of three (3) months. No extension of time under the provisions of 37 CFR 1.136(a) were obtained. Accordingly, the above-identified application became abandoned on November 25, 2007.

Telephone inquiries concerning this decision should be directed to Irvin Dingle at (571) 272-3210.

This matter is being referred to Technology Center AU 2153 for further processing.

Irvin Dingle
Petitions Examiner
Office of Petitions

UNITED STATES PATENT AND TRADEMARK OFFICE

UNITED STATES DEPARTMENT OF COMMERCE
United States Patent and Trademark Office
Address: COMMISSIONER FOR PATENTS
P.O. Box 1450
Alexandria, Virginia 22313-1450
www.uspto.gov

APPL NO.	FILING OR 371 (c) DATE	ART UNIT	FIL FEE REC'D	ATTY.DOCKET NO	DRAWINGS	TOT CLMS	IND CLMS
10/712,862	11/13/2003	3676	900	0275S-000825	6	15	3

CONFIRMATION NO. 8641

UPDATED FILING RECEIPT

OC000000012224505

27572
HARNESS, DICKEY & PIERCE, P.L.C.
P.O. BOX 828
BLOOMFIELD HILLS, MI 48303

Date Mailed: 03/30/2004

Receipt is acknowledged of this regular Patent Application. It will be considered in its order and you will be notified as to the results of the examination. Be sure to provide the U.S. APPLICATION NUMBER, FILING DATE, NAME OF APPLICANT, and TITLE OF INVENTION when inquiring about this application. Fees transmitted by check or draft are subject to collection. Please verify the accuracy of the data presented on this receipt. **If an error is noted on this Filing Receipt, please write to the Office of Initial Patent Examination's Filing Receipt Corrections, facsimile number 703-746-9195. Please provide a copy of this Filing Receipt with the changes noted thereon. If you received a "Notice to File Missing Parts" for this application, please submit any corrections to this Filing Receipt with your reply to the Notice. When the USPTO processes the reply to the Notice, the USPTO will generate another Filing Receipt incorporating the requested corrections (if appropriate).**

Applicant(s)

Gregory S. Snider, Bel Air, MD;
James E. Pangerc, Baltimore, MD;

Domestic Priority data as claimed by applicant

Foreign Applications

If Required, Foreign Filing License Granted: 02/11/2004

Projected Publication Date: 05/19/2005

Non-Publication Request: No

Early Publication Request: No

Title

Lock set installation apparatus and kit and method of using the same

Preliminary Class

070

LICENSE FOR FOREIGN FILING UNDER
Title 35, United States Code, Section 184
Title 37, Code of Federal Regulations, 5.11 & 5.15

GRANTED

The applicant has been granted a license under 35 U.S.C. 184, if the phrase "IF REQUIRED, FOREIGN FILING LICENSE GRANTED" followed by a date appears on this form. Such licenses are issued in all applications where the conditions for issuance of a license have been met, regardless of whether or not a license may be required as set forth in 37 CFR 5.15. The scope and limitations of this license are set forth in 37 CFR 5.15(a) unless an earlier license has been issued under 37 CFR 5.15(b). The license is subject to revocation upon written notification. The date indicated is the effective date of the license, unless an earlier license of similar scope has been granted under 37 CFR 5.13 or 5.14.

This license is to be retained by the licensee and may be used at any time on or after the effective date thereof unless it is revoked. This license is automatically transferred to any related applications(s) filed under 37 CFR 1.53(d). This license is not retroactive.

The grant of a license does not in any way lessen the responsibility of a licensee for the security of the subject matter as imposed by any Government contract or the provisions of existing laws relating to espionage and the national security or the export of technical data. Licensees should apprise themselves of current regulations especially with respect to certain countries, of other agencies, particularly the Office of Defense Trade Controls, Department of State (with respect to Arms, Munitions and Implements of War (22 CFR 121-128)); the Office of Export Administration, Department of Commerce (15 CFR 370.10 (j)); the Office of Foreign Assets Control, Department of Treasury (31 CFR Parts 500+) and the Department of Energy.

NOT GRANTED

No license under 35 U.S.C. 184 has been granted at this time, if the phrase "IF REQUIRED, FOREIGN FILING LICENSE GRANTED" DOES NOT appear on this form. Applicant may still petition for a license under 37 CFR 5.12, if a license is desired before the expiration of 6 months from the filing date of the application. If 6 months has lapsed from the filing date of this application and the licensee has not received any indication of a secrecy order under 35 U.S.C. 181, the licensee may foreign file the application pursuant to 37 CFR 5.15(b).

SPE RESPONSE FOR CERTIFICATE OF CORRECTION

Paper No.: _____

DATE : 02-14-09

TO SPE OF : ART UNIT 2421

SUBJECT : Request for Certificate of Correction for Appl. No.: 10/712870 Patent No.: 7194756

Please respond to this request for a certificate of correction within 7 days.

FOR IFW FILES:

Please review the requested changes/corrections as shown in the **COCIN** document(s) in the IFW application image. No new matter should be introduced, nor should the scope or meaning of the claims be changed.

Please complete the response (see below) and forward the completed response to scanning using document code **COCX**.

FOR PAPER FILES:

Please review the requested changes/corrections as shown in the attached certificate of correction. Please complete this form (see below) and forward it with the file to:

Certificates of Correction Branch (CofC)
South Tower - 9A22
Palm Location 7580

Certificates of Correction Branch
703-308-9390 ext. 123

Thank You For Your Assistance

The request for issuing the above-identified correction(s) is hereby:
Note your decision on the appropriate box.

☑ **Approved**	**All** changes apply.
☐ **Approved in Part**	Specify below which changes **do not** apply.
☐ **Denied**	State the reasons for denial below.

Comments: _____

CHRISTOPHER GRANT
SUPERVISORY PATENT EXAMINER
TECHNOLOGY CENTER 2600

SPE 2421 **Art Unit**

UNITED STATES PATENT AND TRADEMARK OFFICE

Commissioner for Patents
United States Patent and Trademark Office
P.O. Box 1450
Alexandria, VA 22313-1450
www.uspto.gov
DIW 09-04

HAYNES AND BOONE, LLP
901 MAIN STREET, SUITE 3100
DALLAS TX 75202

COPY MAILED

SEP 0 3 2004

OFFICE OF PETITIONS

In re Application of	:
Hsu, Lin, Huang, Bunce, Chen, and	:
Chen	: DECISION REFUSING STATUS
Application No. 10/712,880	: UNDER 37 CFR 1.47(a)
Filed: 13 November, 2003	:
Atty. Docket No. 24061.50	:
(TSMC2002-1130)	:

This is in response to the petition filed under 37 CFR 1.47(a) on 22 July, 2004.

The petition is **DISMISSED**.

Rule 47 applicant is given TWO MONTHS from the mailing date of this decision to reply, correcting the below-noted deficiencies. Any reply should be entitled "Request for Reconsideration of Petition Under 37 CFR 1.47(a)," and should only address the deficiencies noted below, except that the reply may include an oath or declaration executed by the non-signing inventor. **FAILURE TO RESPOND WILL RESULT IN ABANDONMENT OF THE APPLICATION.** Extensions of time may be obtained in accordance with 37 CFR 1.136(a).

The above-identified application was filed on 13 November, 2003, without an executed oath or declaration. Accordingly, on 10 February, 2004, Initial Patent Examination Division mailed a Notice to File Missing Parts of Nonprovisional Application, requiring an executed oath or declaration and a surcharge for its late filing. A two (2) month period for reply was set.

In response, on 9 August, 2004, the present petition, petition fee, and a four (4) month extension of time were filed, along with the late filing surcharge. A declaration naming Ming Ta Hsu, Grace Lin, Cho Yi Huang, Jeffrey Bunce, Jyh-Hwa Chen, and

Hsin-Nein Chen as joint inventors and signed by all joint inventors except Huang on behalf of himself and on behalf of joint inventor Huang was also filed.

Petitioners' counsel asserts that a copy of the declaration was sent to the non-signing inventor, but that the non-signing inventor has refused to sign it.

A grantable petition under 37 CFR 1.47(a) requires:

(1) proof that the non-signing inventor cannot be reached or located, notwithstanding diligent effort, or refuses to sign the oath or declaration after having been presented with the application papers (specification, claims and drawings);
(2) an acceptable oath or declaration in compliance with 35 U.S.C. §§ 115 and 116;
(3) the petition fee;
(4) a surcharge of $130 or $65 (small entity) if the petition and/or declaration is not filed at the time of filing the application, and
(5) a statement of the last known address of the non-signing inventor.

The petition lacks item (1).

In regards to item (1), petitioners have not provided proof that Huang was ever sent or presented with a copy of the application as filed (specification, including claims, drawings, if any, and the declaration).[1] The petition does not state that a copy of the application was sent to Huang. However, in order for a Rule 47 petition to be granted, the inventor **must** be afforded an opportunity to review the application.[2] Therefore, petitioners should sent a copy of the application papers to Huang's last known address. Petitioners may show proof that a copy of the application was sent or given to the non-signing inventor for review by providing a copy of the cover letter transmitting the application papers (specification, including claims, drawings, if any, and the declaration) to the non-signing inventor or details given in an affidavit or declaration of facts by a person having first-hand knowledge of the details.

---

[1] MPEP 409.03(d).

[2] See In re Gray, 115 USPQ 80 (Comm'r Pat. 1956). The application papers must be sent or given to the non-signing inventor unless he or she refuses to accept delivery of the papers.

Likewise, before a *bona fide* refusal to sign the declaration can be alleged, petitioners must show that a copy of the application was sent or given to the inventor. If the inventor refuses in writing, petitioners must submit a copy of that written refusal with any renewed petition. If the refusal was made orally to a person, then that person must provide details of the refusal in an affidavit or declaration of facts.

Further correspondence with respect to this matter should be addressed as follows:

By mail: Mail Stop Petition
Commissioner for Patents
P.O. Box 1450
Alexandria, VA 22313-1450

By FAX: (703) 872-9306
Attn: Office of Petitions

By hand: U.S. Patent and Trademark Office
220 20th Street S.
Customer Window, Mail Stop Petitions
Crystal Plaza 2, Lobby, Room 1B03
Arlington, VA 22202

Telephone inquiries related to this decision should be directed to the undersigned at 703-308-6918.

DWood

Douglas I. Wood
Senior Petitions Attorney
Office of Petitions

UNITED STATES PATENT AND TRADEMARK OFFICE

Commissioner for Patents
United States Patent and Trademark Office
P.O. Box 1450
Alexandria, VA 22313-1450
www.uspto.gov
DIW 01-05

HAYNES AND BOONE, LLP
901 MAIN STREET, SUITE 3100
DALLAS TX 75202

COPY MAILED

JAN 0 7 2005

OFFICE OF PETITIONS

In re Application of	:
Hsu, Lin, Huang, Bunce, Chen, and Chen	: DECISION ACCORDING STATUS
Application No. 10/712,880	: UNDER 37 CFR 1.47(a)
Filed: 13 November, 2003	:
Atty. Docket No. 24061.50 (TSMC2002-1130)	:

This is in response to the renewed petition filed under 37 CFR 1.47(a) on 5 November, 2004 (certificate of mailing 2 November, 2004).

The petition is **GRANTED**.

Petitioners have shown that non-signing inventor Huang has refused to sign the declaration. Specifically, petitioners have shown that a copy of the application was sent to the last known address of the non-signing joint inventor. However, the non-signing inventor has failed to sign and return the declaration naming him as a joint inventor along with Ming Ta Hsu, Grace Lin, Jeffrey Bunce, Jyh-Hwa Chen, and Hsin-Nein Chen.

The above-identified application and papers have been reviewed and found in compliance with 37 CFR 1.47(a). This application is hereby accorded Rule 1.47(a) status.

As provided in Rule 1.47(c), this Office will forward notice of this application's filing to the non-signing inventor at the address given in the Declaration. Notice of the filing of this application will also be published in the Official Gazette.

After this decision is mailed, the application will be referred to Technology Center Art Unit 2125 for examination in due course.

Telephone inquiries related to this decision should be directed to the undersigned at 571-272-3231.

Douglas I. Wood
Senior Petitions Attorney
Office of Petitions

UNITED STATES PATENT AND TRADEMARK OFFICE

Commissioner for Patents
United States Patent and Trademark Office
P.O. Box 1450
Alexandria, VA 22313-1450
www.uspto.gov
DIW 01-05

Cho Yi Huang
5F, No 126, Leye St.
Taipei City, Taiwan 106
TAIWAN R.O.C.

COPY MAILED

JAN 0 7 2005

OFFICE OF PETITIONS

In re Application of
Hsu et al.
Application No. 10/712,880
Filed: 13 November, 2003
For: BUSINESS LINKAGE MECHANISM BETWEEN ORDER AND QUOTATION

Dear Mr. Huang:

You are named as a joint inventor in the above identified United States patent application, filed under the provisions of 35 U.S.C. 116 (United States Code), and 37 CFR 1.47(a), Rules of Practice in Patent Cases. Should a patent be granted on the application you will be designated therein as a joint inventor.

As a named inventor you are entitled to inspect any paper in the file wrapper of the application, order copies of all or any part thereof (at a prepaid cost per 37 CFR 1.19) or make your position of record in the application. Alternatively, you may arrange to do any of the preceding through a registered patent attorney or agent presenting written authorization from you. If you care to join the application, counsel of record (see below) would presumably assist you. Joining in the application would entail the filing of an appropriate oath or declaration by you pursuant to 37 CFR 1.63.

Telephone inquiries regarding this communication should be directed to the undersigned at 571/272-3231. Requests for information regarding your application should be directed to the File Information Unit at 703/308-2733. Information regarding how to pay for and order a copy of the application, or a specific paper in the application, should be directed to Certification Division at 703/308-9726 or 1-800-972-6382 (outside the Washington D.C. area).

D Wood

Douglas I. Wood
Senior Petitions Attorney
Office of Petitions

HAYNES AND BOONE, LLP
901 MAIN STREET, SUITE 3100
DALLAS TX 75202-3789

UNITED STATES PATENT AND TRADEMARK OFFICE

Commissioner for Patents
United States Patent and Trademark Office
P.O. Box 1450
Alexandria, VA 22313-1450
www.uspto.gov

MAILED

MAR 0 1 2010

OFFICE OF PETITIONS

SAP / FINNEGAN, HENDERSON LLP
901 NEW YORK AVENUE, NW
WASHINGTON DC 20001-4413

In re Application of:
Bozak et al.
Application No. 10/712886
Filing or 371(c) Date: 11/12/2003
Atty. Docket No.: 09700.0035-00

: LETTER REGARDING
: PATENT TERM ADJUSTMENT

This letter is in response to the "NOTICE OF POSSIBLE PTO ERROR IN THE DETERMINATION OF PATENT TERM ADJUSTMENT AND REQUEST FOR REVIEW OF CALCULATION," filed October 15, 2009. The Office thanks applicants for their good faith and candor in bringing this to our attention.

The Office has updated the PAIR screen to reflect that the correct Patent Term Adjustment (PTA) determination at the time of the mailing of the Notice of Allowance is 798 days. A copy of the updated PAIR screen, showing the correct determination, is enclosed.

The Determination of Patent Term Adjustment mailed July 16, 2009 indicated that the above-identified application was entitled to a PTA of 905 days. Applicants believe that there should be a 72 day reduction of patent term adjustment for the Information Disclosure Statement ("IDS"), on February 11, 2009 and a 42 day reduction of patent term adjustment for the IDS filed on July 1, 2009.

As indicated by applicants, the Office neglected to assess a reduction of 72 days in accordance with 37 CFR 1.704(c)(8) in connection with the IDS, filed February 11, 2009. The reduction commenced December 2, 2008, the day after the date that the initial reply was filed, and ended February 11, 2009, the date that the supplemental reply, IDS, was filed.

As further indicated by applicants, the Office neglected to assess a reduction in connection with the IDS filed July 1, 2009. In accordance with 37 CFR 1.704(c)(8), the adjustment of patent term is subject to further reduction of 35 days. The reduction commenced May 28, 2009, the day after the date that the first supplemental reply in response to the non-final Office action was filed, and ended July 1, 2009, the date that the second supplemental reply to the non-final Office action was filed.

In view thereof, the correct determination of patent term adjustment at the time of the mailing of the Notice of Allowance is **798 days**, (912 days of PTO delay, reduced by 114 days (72 days + 7 days + 35 days) of applicant delay), subject to any terminal disclaimer.

Given the basis for granting this petition, no fee has been charged. The Office thanks applicants for their candor and good faith in bringing this matter to the attention of the Office.

The file is being forwarded to the Office of Data Management for processing into a patent. The patent term adjustment indicated on the patent (as shown on the Issue Notification mailed about three weeks prior to patent issuance) will include any additional adjustment accrued both for Office delay in issuing the patent more than four months after payment of the issue fee and satisfaction of all outstanding requirements, and for the Office taking in excess of three years to issue the patent (to the extent that the three-year period does not overlap with periods already accorded).

Telephone inquiries specific to this matter should be directed to Attorney Derek Woods, at (571) 272-3232.

/ALESIA M. BROWN/

Alesia Brown
Petitions Attorney
Office of Petitions
Office of the Deputy Commissioner
for Patent Examination Policy

Enclosure: Updated PAIR Screen

Day : Sunday
Date: 2/28/2010

PALM INTRANET

Time: 16:12:22

PTA Calculations for Application: 10/712886

Application Filing Date:	11/12/2003	PTO Delay (PTO):	912
Issue Date of Patent:		Three Years:	0
Pre-Issue Petitions:	0	Applicant Delay (APPL):	7
Post-Issue Petitions:	0	Total PTA (days):	798
PTO Delay Adjustment:	-107		

File Contents History

Number	Date	Contents Description	PTO	APPL	START
111	02/28/2010	ADJUSTMENT OF PTA CALCULATION BY PTO		35	
110	02/28/2010	ADJUSTMENT OF PTA CALCULATION BY PTO		72	
72	07/16/2009	MAIL NOTICE OF ALLOWANCE			
71	07/15/2009	ISSUE REVISION COMPLETED			
70	07/01/2009	INFORMATION DISCLOSURE STATEMENT CONSIDERED			
69	07/09/2009	NOTICE OF ALLOWANCE DATA VERIFICATION COMPLETED			
68	07/09/2009	DOCUMENT VERIFICATION			
67	07/09/2009	ALLOWED CASE RETURNED TO THE EXAMINER FOR CLERICAL PROCESSING			
66	07/01/2009	INFORMATION DISCLOSURE STATEMENT (IDS) FILED			
65	06/25/2009	NOTICE OF ALLOWABILITY			
63	05/27/2009	INFORMATION DISCLOSURE STATEMENT CONSIDERED			
62	05/27/2009	REFERENCE CAPTURE ON IDS			
61	05/27/2009	INFORMATION DISCLOSURE STATEMENT (IDS) FILED		7	59
60	06/04/2009	DATE FORWARDED TO EXAMINER			
59	05/20/2009	RESPONSE AFTER NON-FINAL ACTION			
58	05/27/2009	INFORMATION DISCLOSURE STATEMENT (IDS) FILED			
57	05/19/2009	MAIL EXAMINER INTERVIEW SUMMARY (PTOL - 413)			
56	05/13/2009	EXAMINER INTERVIEW SUMMARY RECORD (PTOL - 413)			
55	02/11/2009	REFERENCE CAPTURE ON IDS			

54	02/11/2009	INFORMATION DISCLOSURE STATEMENT (IDS) FILED			
53	03/04/2009	MAIL NON-FINAL REJECTION			
52	03/02/2009	NON-FINAL REJECTION			
51	02/11/2009	INFORMATION DISCLOSURE STATEMENT CONSIDERED			
50	02/11/2009	INFORMATION DISCLOSURE STATEMENT (IDS) FILED			
49	12/15/2008	DATE FORWARDED TO EXAMINER			
48	12/01/2008	AMENDMENT SUBMITTED/ENTERED WITH FILING OF CPA/RCE			
47	12/15/2008	DATE FORWARDED TO EXAMINER			
46	12/01/2008	REQUEST FOR CONTINUED EXAMINATION (RCE)			
45	12/15/2008	DISPOSAL FOR A RCE / CPA / R129			
44	12/01/2008	WORKFLOW - REQUEST FOR RCE - BEGIN			
43	10/03/2008	MAIL EXAMINER INTERVIEW SUMMARY (PTOL - 413)			
42	09/24/2008	EXAMINER INTERVIEW SUMMARY RECORD (PTOL - 413)			
41	09/03/2008	MAIL FINAL REJECTION (PTOL - 326)			
40	09/02/2008	FINAL REJECTION			
39	06/19/2008	DATE FORWARDED TO EXAMINER			
38	06/12/2008	RESPONSE AFTER NON-FINAL ACTION			
37	06/11/2008	MAIL EXAMINER INTERVIEW SUMMARY (PTOL - 413)			
36	06/04/2008	EXAMINER INTERVIEW SUMMARY RECORD (PTOL - 413)			
35	03/13/2008	MAIL NON-FINAL REJECTION			
34	03/03/2008	NON-FINAL REJECTION			
33	02/22/2008	DATE FORWARDED TO EXAMINER			
32	02/15/2008	AMENDMENT AFTER FINAL REJECTION			
31	11/20/2007	MAIL FINAL REJECTION (PTOL - 326)			
30	11/19/2007	FINAL REJECTION			
29	10/15/2007	CASE DOCKETED TO EXAMINER IN GAU			
28	09/26/2007	DATE FORWARDED TO EXAMINER			
27	09/20/2007	RESPONSE AFTER NON-FINAL ACTION			
26	09/26/2007	CORRESPONDENCE ADDRESS CHANGE			
25	07/23/2007	CASE DOCKETED TO EXAMINER IN GAU			
24	07/13/2007	MAIL NON-FINAL REJECTION	912		-1

23	07/09/2007	NON-FINAL REJECTION			
22	04/07/2004	INFORMATION DISCLOSURE STATEMENT CONSIDERED			
21	06/14/2005	INFORMATION DISCLOSURE STATEMENT CONSIDERED			
20	06/26/2007	CASE DOCKETED TO EXAMINER IN GAU			
19	04/23/2004	INFORMATION DISCLOSURE STATEMENT CONSIDERED			
18	04/23/2004	INFORMATION DISCLOSURE STATEMENT (IDS) FILED			
17	01/16/2007	CASE DOCKETED TO EXAMINER IN GAU			
16	07/22/2006	TRANSFER INQUIRY TO GAU			
15	01/20/2006	TRANSFER INQUIRY TO GAU			
14.7	06/14/2005	INFORMATION DISCLOSURE STATEMENT (IDS) FILED			
14	06/14/2005	INFORMATION DISCLOSURE STATEMENT (IDS) FILED			
13	06/10/2005	CORRESPONDENCE ADDRESS CHANGE			
12	06/10/2005	CHANGE IN POWER OF ATTORNEY (MAY INCLUDE ASSOCIATE POA)			
11	05/20/2004	IFW TSS PROCESSING BY TECH CENTER COMPLETE			
10.7	04/07/2004	INFORMATION DISCLOSURE STATEMENT (IDS) FILED			
10	04/07/2004	INFORMATION DISCLOSURE STATEMENT (IDS) FILED			
8	02/09/2004	APPLICATION RETURN FROM OIPE			
7	02/09/2004	APPLICATION RETURN TO OIPE			
6	02/09/2004	APPLICATION DISPATCHED FROM OIPE			
5	02/09/2004	APPLICATION IS NOW COMPLETE			
4	01/29/2004	CLEARED BY OIPE CSR			
3	01/29/2004	CASE CLASSIFIED BY OIPE			
2	12/26/2003	IFW SCAN & PACR AUTO SECURITY REVIEW			
1	11/12/2003	INITIAL EXAM TEAM NN			

Search Another: Application# [ ] Search

EXPLANATION OF PTA CALCULATION

EXPLANATION OF PTE CALCULATION

To go back, right click here and select Back. To go forward, right click here and select Forward. To refresh, right click here

UNITED STATES PATENT AND TRADEMARK OFFICE

UNITED STATES DEPARTMENT OF COMMERCE
United States Patent and Trademark Office
Address: COMMISSIONER FOR PATENTS
P.O. Box 1450
Alexandria, Virginia 22313-1450
www.uspto.gov

ALSTON & BIRD LLP
BANK OF AMERICA PLAZA
101 SOUTH TRYON STREET, SUITE 4000
CHARLOTTE, NC 28280-4000

Mail Date: 04/21/2010

Applicant	: Timothy Addington	: DECISION ON REQUEST FOR
Patent Number	: 7627868	: RECALCULATION of PATENT
Issue Date	: 12/01/2009	: TERM ADJUSTMENT IN VIEW
Appliction No	: 10/712,890	: OF WYETH AND NOTICE OF INTENT TO
Filed	: 11/12/2003	: ISSUE CERTIFICATE OF CORRECTION
		:

The Request for Recalculation is **GRANTED** to the extent indicated.

The patent term adjustment has been determined to be **1230** days. The USPTO will *sua sponte* issue a certificate of correction reflecting the amount of PTA days determined by the recalculation.

Prior to the issuance of the certificate of correction, the USPTO will afford patentee an opportunity to be heard and request reconsideration. Accordingly, patentee has **one month or thirty (30) days**, whichever is longer, to file a request for reconsideration of this patent term adjustment calculation. See 35 U.S.C. 154(b)(3)(B)(ii) and 37 CFR 1.322(a)(4). No extensions of time will be granted under 37 CFR 1.136.

Patentee should use document code PET.OP if electronically filing a request for reconsideration of this patent term adjustment calculation. The patentee must also include the information required by 37 CFR 1.705(b)(2) and the fee required by 37 CFR 1.18(e). If patentee does not file a timely request for reconsideration of this patent term adjustment calculation including the information required by 37 CFR 1.705(b)(2) and the fee required by 37 CFR 1.18(e), the USPTO will issue a certificate of correction reflecting the PTA determination noted above.

Patentee should be aware that in order to preserve the right to review in the United States District Court for the District of Columbia of the USPTO patent term adjustment determination, patentee must ensure that he or she also take the steps required under 35 U.S.C. 154(b)(4)(A) in a timely manner. Nothing in the request for recalculation should be construed as providing an alternative time frame for commencing a civil action under 35 U.S.C. 154(b)(4)(A).

Any questions concerning this decision should be directed to the Office of Patent Legal Administration at 571-272-7702.

UNITED STATES PATENT AND TRADEMARK OFFICE

Commissioner for Patents
United States Patent and Trademark Office
P.O. Box 1450
Alexandria, VA 22313-1450
www.uspto.gov

Covidien
IP Counsel - Respiratory & Monitoring Solutions
60 Middletown Avenue
North Haven CT 06473

COPY MAILED

FEB 28 2008

OFFICE OF PETITIONS

In re Application of	:	
Charles Porges et al.	:	
Application No. 10/712,895	:	ON PETITION
Filed: November 12, 2003	:	
Attorney Docket No. 009103-015811	:	

This is a decision on the petition under 37 CFR 1.137(b), filed June 15, 2007, to revive the above-identified application.

The petition is **GRANTED**.

The application became abandoned for failure to timely reply within the meaning of 37 CFR 1.113 to the final Office action, mailed January 24, 2005, which set a shortened statutory period for reply of three (3) months. A one (1) month extension of time under the provisions of 37 CFR 1.136(a) was obtained. Accordingly, the application became abandoned on May 25, 2005. The Notice of Abandonment was mailed November 25, 2005.

The petition satisfies the requirements of 37 CFR 1.137(b) in that petitioner has supplied (1) the reply in the form of a response; (2) the petition fee of $1,500; and (3) an adequate statement of unintentional delay.

It is not apparent whether the person signing the statement of unintentional delay was in a position to have firsthand or direct knowledge of the facts and circumstances of the delay at issue. Nevertheless, such statement is being treated as having been made as the result of a reasonable inquiry into the facts and circumstances of such delay. See 37 CFR 10.18(b) and Changes to Patent Practice and Procedure; Final Rule Notice, 62 Fed. Reg. 53131, 53178 (October 10, 1997), 1203 Off. Gaz. Pat. Office 63, 103 (October 21, 1997). In the event that such an inquiry has not been made, petitioner must make such an inquiry. If such inquiry results in the discovery that it is not correct that the entire delay in filing the required reply from the due date for the reply until the filing of a grantable petition pursuant to 37 CFR 1.137(b) was unintentional, petitioner must notify the Office.

Telephone inquiries concerning this decision should be directed to Terri Williams at (571) 272-2991.

The application file is being referred to Technology Center AU 3735 for appropriate action on the concurrently filed amendment.

Liana Walsh
Petitions Examiner
Office of Petitions

cc: **Michael G. Fletcher**
7915 FM 1960 West
Suite 330
Houston, TX 77070

UNITED STATES PATENT AND TRADEMARK OFFICE

COMMISSIONER FOR PATENTS
UNITED STATES PATENT AND TRADEMARK OFFICE
P.O. BOX 1450
ALEXANDRIA, VA 22313-1450
WWW.USPTO.GOV

Paper No. None

PATENT DEPARTMENT
TAYLOR, PORTER, BROOKS & PHILLIPS, L.L.P
P.O. BOX 2471
BATON ROUGE LA 70821-2471

COPY MAILED

JUL 05 2006

OFFICE OF PETITIONS

In re Application of :
Steven D. Linscombe :
Application No. 10/712,896 :
Filed: November 13, 2003 :
Attorney Docket No. 03A1 Linscombe :
Title: RICE CULTIVAR DESIGNATED 'CHENIERE' :

DECISION GRANTING
PETITION UNDER 37 C.F.R. §1.137(b)

This is a decision on the petition filed February 14, 2006, pursuant to 37 C.F.R. §1.137(b)[1], to revive the above-identified application.

The above-identified application became abandoned for failure to reply within the meaning of 37 CFR §1.113 in a timely manner to the final Office action mailed July 15, 2005, which set a shortened statutory period for reply of three (3) months. No extensions of time under the provisions of 37 CFR §1.136(a) were obtained, and no responses were received. Accordingly, the above-identified application became abandoned on October 16, 2005.

The present petition was received on February 14, 2006, along with the petition fee. Petitioner has concurrently submitted a Request for Continued Examination (RCE) under 37 C.F.R. §1.114 as well as the associated fee and the proper statement of unintentional delay. No terminal disclaimer is required. The RCE has been accepted as the required reply under 37 C.F.R. §1.137(b)(1). The concurrently submitted amendment shall serve as the required submission.

---

1 A grantable petition pursuant to 37 CFR 1.137(b) must be accompanied by:

(1) The reply required to the outstanding Office action or notice, unless previously filed;

(2) The petition fee as set forth in § 1.17(m);

(3) A statement that the entire delay in filing the required reply from the due date for the reply until the filing of a grantable petition pursuant to this paragraph was unintentional. The Commissioner may require additional information where there is a question whether the delay was unintentional, and;

(4) Any terminal disclaimer (and fee as set forth in § 1.20(d)) required pursuant to paragraph (d) of this section.

As such, the petition is **GRANTED**.

As stated above, a terminal disclaimer is not required. As such, the terminal disclaimer which Petitioner has submitted will not be entered, and the associated fee will be credited to Petitioner's deposit account, as authorized in the petition.

The Technology Center will be notified of this decision. The Technology Center's support staff will notify the Examiner of this decision, so that the amendment of February 14, 2006 can be processed.

The general phone number for the Office of Petitions which should be used for status requests is (571) 272-3282. Telephone inquiries regarding *this decision* should be directed to the undersigned at (571) 272-3225.

Paul Shanoski
Senior Attorney
Office of Petitions
United States Patent and Trademark Office

UNITED STATES PATENT AND TRADEMARK OFFICE

UNITED STATES DEPARTMENT OF COMMERCE
United States Patent and Trademark Office
Address: COMMISSIONER FOR PATENTS
P.O. Box 1450
Alexandria, Virginia 22313-1450
www.uspto.gov

APPL NO.	FILING OR 371 (c) DATE	ART UNIT	FIL FEE REC'D	ATTY.DOCKET NO	DRAWINGS	TOT CLMS	IND CLMS
10/712,919	11/12/2003	1634	1640	SUN-P8744	30	54	6

CONFIRMATION NO. 1750

David B. Ritchie
Thelen Reid & Priest, LLP
P.O. Box 460640
San Jose, CA 95164-0640

CORRECTED FILING RECEIPT

OC000000012313324

Date Mailed: 04/08/2004

Receipt is acknowledged of this regular Patent Application. It will be considered in its order and you will be notified as to the results of the examination. Be sure to provide the U.S. APPLICATION NUMBER, FILING DATE, NAME OF APPLICANT, and TITLE OF INVENTION when inquiring about this application. Fees transmitted by check or draft are subject to collection. Please verify the accuracy of the data presented on this receipt. **If an error is noted on this Filing Receipt, please write to the Office of Initial Patent Examination's Filing Receipt Corrections, facsimile number 703-746-9195. Please provide a copy of this Filing Receipt with the changes noted thereon. If you received a "Notice to File Missing Parts" for this application, please submit any corrections to this Filing Receipt with your reply to the Notice. When the USPTO processes the reply to the Notice, the USPTO will generate another Filing Receipt incorporating the requested corrections (if appropriate).**

Applicant(s)

Judith Schwabe, Cleveland Heights, OH;
Zhiqun Chen, Fremont, CA;

Assignment For Published Patent Application

Sun Microsystems, Inc., a Delaware Corporation;

Domestic Priority data as claimed by applicant

This application is a CIP of 10/686,513 10/14/2003
which is a CON of 10/002,437 11/01/2001 PAT 6,687,898
which is a CON of 09/439,113 11/12/1999 PAT 6,363,523

Foreign Applications

If Required, Foreign Filing License Granted: 01/05/2004

Projected Publication Date: 04/15/2004

Non-Publication Request: No

Early Publication Request: No

Title

Overflow predictive arithmetic instruction optimization using chaining

Preliminary Class

435

LICENSE FOR FOREIGN FILING UNDER
Title 35, United States Code, Section 184
Title 37, Code of Federal Regulations, 5.11 & 5.15

GRANTED

The applicant has been granted a license under 35 U.S.C. 184, if the phrase "IF REQUIRED, FOREIGN FILING LICENSE GRANTED" followed by a date appears on this form. Such licenses are issued in all applications where the conditions for issuance of a license have been met, regardless of whether or not a license may be required as set forth in 37 CFR 5.15. The scope and limitations of this license are set forth in 37 CFR 5.15(a) unless an earlier license has been issued under 37 CFR 5.15(b). The license is subject to revocation upon written notification. The date indicated is the effective date of the license, unless an earlier license of similar scope has been granted under 37 CFR 5.13 or 5.14.

This license is to be retained by the licensee and may be used at any time on or after the effective date thereof unless it is revoked. This license is automatically transferred to any related applications(s) filed under 37 CFR 1.53(d). This license is not retroactive.

The grant of a license does not in any way lessen the responsibility of a licensee for the security of the subject matter as imposed by any Government contract or the provisions of existing laws relating to espionage and the national security or the export of technical data. Licensees should apprise themselves of current regulations especially with respect to certain countries, of other agencies, particularly the Office of Defense Trade Controls, Department of State (with respect to Arms, Munitions and Implements of War (22 CFR 121-128)); the Office of Export Administration, Department of Commerce (15 CFR 370.10 (j)); the Office of Foreign Assets Control, Department of Treasury (31 CFR Parts 500+) and the Department of Energy.

NOT GRANTED

No license under 35 U.S.C. 184 has been granted at this time, if the phrase "IF REQUIRED, FOREIGN FILING LICENSE GRANTED" DOES NOT appear on this form. Applicant may still petition for a license under 37 CFR 5.12, if a license is desired before the expiration of 6 months from the filing date of the application. If 6 months has lapsed from the filing date of this application and the licensee has not received any indication of a secrecy order under 35 U.S.C. 181, the licensee may foreign file the application pursuant to 37 CFR 5.15(b).

UNITED STATES PATENT AND TRADEMARK OFFICE

COMMISSIONER FOR PATENTS
UNITED STATES PATENT AND TRADEMARK OFFICE
P.O. BOX 1450
ALEXANDRIA, VA 22313-1450
www.uspto.gov

Del S. Christensen
Shell Oil Company
Legal - Intellectual Property
P. O. Box 2463
Houston, TX 77252-2463

COPY MAILED

JAN 0 6 2005

OFFICE OF PETITIONS

In re Application of :
Douwe J.Runia, et al. :
Application No. 10/712,924 : ON PETITION
Filed: November 13, 2003 :
Attorney Docket No. TS-6413USA. :

This is a decision on the petition styled " Petition Under Rule 1.78(a)(3)," filed October 28, 2004, which is being treated as a petition under 37 CFR 1.78(a)(6) to accept an unintentionally delayed claim under 35 U.S.C.§ 119(e) for the benefit of prior-filed provisional Application No. 60/426,648, filed November 15, 2002.

The petition is **DISMISSED AS MOOT**.

Petitioner has submitted on October 28, 2004, an amendment to add a new paragraph to the specification immediately following the title to include a reference to prior-filed provisional Application No. 60/426,648, filed November 15, 2002.

The instant pending nonprovisional application was filed on November 13, 2003, and was pending at the time of filing of the instant petition. While a reference to the prior-filed provisional application was not included in an ADS or in the first sentence of the specification following the title, reference nevertheless was made in the transmittal letter and the declaration filed with the above-identified application.

The current procedure where a claim for priority under 37 CFR 1.78(a)(6) is not included in the first sentence of the specification or in an ADS but does appear either in the oath or declaration or a transmittal letter filed with the application and the Office notes the claim for priority, no petition will be required to accept a late claim for priority. This is because the application would have been scheduled for

publication on the basis of the information concerning the claim submitted elsewhere in the application within the time period set forth in 37 CFR 1.78(a)(5). However, on the other hand, if the USPTO does not note the claim for priority to the provisional application in the oath or declaration or transmittal letter submitted with the application, a petition will be required to accept a late claim for priority under 37 CFR 1.78(a)(6).[1] In the instant case, the Office noted the claim for priority of provisional Application No. 60/426,648 in the transmittal letter or the declaration filed with the application, as shown by its inclusion on the filing receipt.

In view of this decision, petitioner is entitled to a refund of the $130 fee collected with this petition. Any request for refund must included a copy of this decision and be mailed to Mail Stop 16, Director of the U.S. Patent and Trademark Office, P. O. Box 1450, Alexandria, VA 22313-1450 or faxed to the Customer Service Help Desk at (703) 308-5077.

Any questions concerning this decision on petition may be directed to Sherry Brinkley at (571) 272-3204. All other inquiries concerning either the examination procedures or status of the application should be directed to the Technology Center.

This application is being forwarded to Technology Center AU 3632 for consideration by the examiner of the claim under 35 U.S.C. § 119(e) and 37 CFR 1.78(a)(6) for the benefit of prior-filed provisional Application No. 60/426,648, filed on November 15, 2002.

Sherry D. Brinkley
Petitions Examiner
Office of Petitions
Office of the Deputy Commissioner
for Patent Examination Policy

Karen O. Creasy
Petitions Examiner
Office of Petitions
Office of the Deputy Commissioner
for Patent Examination Policy

[1] Note 66 Federal Register 67087 at 67089 (Dec. 28, 2001), effective December 28, 2001.

UNITED STATES PATENT AND TRADEMARK OFFICE

COMMISSIONER FOR PATENTS
UNITED STATES PATENT AND TRADEMARK OFFICE
P.O. BOX 1450
ALEXANDRIA, VA 22313-1450
www.uspto.gov

JORDAN AND HAMBURG LLP
122 EAST 42ND STREET
SUITE 4000
NEW YORK, NY 10168

COPY MAILED

DEC 15 2005

OFFICE OF PETITIONS

In re Application of
Naohiko Tsuzuki, et al.
Application No. 10/712,930
Filed: November 13, 2003
Attorney Docket No.: F-8042

ON PETITION

This is a decision on the petition, filed December 12, 2005, under 37 CFR 1.313(c)(2) to withdraw the above-identified application from issue after payment of the issue fee.

The petition is **GRANTED**.

The above-identified application is withdrawn from issue for consideration of a submission under 37 CFR 1.114 (request for continued examination). See 37 CFR 1.313(c)(2).

Petitioner is advised that the issue fee paid on November 21, 2005, in the above-identified application, cannot be refunded. If, however, the above-identified application is again allowed, petitioner may request that it be applied towards the issue fee required by the new Notice of Allowance.[1]

Telephone inquiries relating to this decision should be directed to the undersigned at (571) 272-3204.

The application is being referred to Technology Center AU 1725 for further processing of the request for continued examination under 37 CFR 1.114.

Sherry D. Brinkley
Petitions Examiner
Office of Petitions

[1]The request to apply the issue fee to the new Notice may be satisfied by completing and returning the new Issue Fee Transmittal Form PTOL-85(b), which includes the following language thereon: "Commissioner for Patents is requested to apply the Issue Fee and Publication Fee (if any) or re-apply any previously paid issue fee to the application identified above." Petitioner is advised that, whether a fee is indicated as being due or not, the Issue Fee Transmittal Form **must** be completed and timely submitted to avoid abandonment. Note the language in bold text on the first page of the Notice of Allowance and Fee(s) Due (PTOL-85).

UNITED STATES PATENT AND TRADEMARK OFFICE

UNITED STATES DEPARTMENT OF COMMERCE
United States Patent and Trademark Office
Address: COMMISSIONER FOR PATENTS
P.O. Box 1450
Alexandria, Virginia 22313-1450
www.uspto.gov

NIXON PEABODY LLP
300 S. Riverside Plaza
16th Floor
CHICAGO, IL 60606

Mail Date: 04/21/2010

Applicant	: Larry J. Pacey	: DECISION ON REQUEST FOR
Patent Number	: 7604538	: RECALCULATION of PATENT
Issue Date	: 10/20/2009	: TERM ADJUSTMENT IN VIEW
Appliction No	: 10/712,951	: OF WYETH AND NOTICE OF INTENT TO
Filed	: 11/13/2003	: ISSUE CERTIFICATE OF CORRECTION
		:

The Request for Recalculation is **GRANTED** to the extent indicated.

The patent term adjustment has been determined to be **1658** days. The USPTO will *sua sponte* issue a certificate of correction reflecting the amount of PTA days determined by the recalculation.

Prior to the issuance of the certificate of correction, the USPTO will afford patentee an opportunity to be heard and request reconsideration. Accordingly, patentee has **one month or thirty (30) days**, whichever is longer, to file a request for reconsideration of this patent term adjustment calculation. See 35 U.S.C. 154(b)(3)(B)(ii) and 37 CFR 1.322(a)(4). No extensions of time will be granted under 37 CFR 1.136.

Patentee should use document code PET.OP if electronically filing a request for reconsideration of this patent term adjustment calculation. The patentee must also include the information required by 37 CFR 1.705(b)(2) and the fee required by 37 CFR 1.18(e). If patentee does not file a timely request for reconsideration of this patent term adjustment calculation including the information required by 37 CFR 1.705(b)(2) and the fee required by 37 CFR 1.18(e), the USPTO will issue a certificate of correction reflecting the PTA determination noted above.

Patentee should be aware that in order to preserve the right to review in the United States District Court for the District of Columbia of the USPTO patent term adjustment determination, patentee must ensure that he or she also take the steps required under 35 U.S.C. 154(b)(4)(A) in a timely manner. Nothing in the request for recalculation should be construed as providing an alternative time frame for commencing a civil action under 35 U.S.C. 154(b)(4)(A).

Any questions concerning this decision should be directed to the Office of Patent Legal Administration at 571-272-7702.

UNITED STATES PATENT AND TRADEMARK OFFICE

COMMISSIONER FOR PATENTS
UNITED STATES PATENT AND TRADEMARK OFFICE
P.O. BOX 1450
ALEXANDRIA, VA 22313-1450
www.uspto.gov

FULBRIGHT & JAWORSKI L.L.P.
Robert Berliner
Twenty-Ninth Floor
865 South Figueroa
Los Angeles CA 90017-2571

COPY MAILED

MAR 0 8 2004

OFFICE OF PETITIONS

In re Application of
Griffith
Application No. 10/712,956
Filed: November 12, 2003
Attorney Docket No. LA-7171-114/10211962
For: RAY TRACING KERNEL CALIBRATION

: DECISION GRANTING
: PETITION

This is a decision on the petition filed January 21, 2004 entitled, "PETITION TO CORRECT FILING DATE." The petition will be treated under 37 CFR 1.10(d), as a request that the above-identified application be accorded a filing date of November 12, 2003. Petitioner received a date stamped postcard receipt showing November 14, 2003 as the date of receipt in the Office.

Petitioner requests a November 12, 2003 filing date on the basis that the application was deposited in United States Postal Service (USPS) Express Mail service on November 12, 2003, pursuant to the requirements of 37 CFR 1.10. The petition is accompanied by a copy of a USPS Pickup Service Statement showing Express Mail Label No. EV324745571US was picked up on November 12, 2003. The same Express Mail label number is found on the original application papers. In addition, petitioner has provided a letter from B. Davis, a USPS Administrative Associate in Los Angeles, CA that states the subject Express Mail package was picked up on November 12, 2003.

Paragraph (d) of 37 CFR 1.10 states that:

> Any person filing correspondence under this section that was received by the Office and delivered by the "Express Mail Post Office to Addressee" service of the USPS, who can show that the "date-in" on the "Express Mail" mailing label or other official notation entered by the USPS was incorrectly entered or omitted by the USPS, may petition the Commissioner to accord the correspondence a filing date as of the date the correspondence is shown to have been deposited with the USPS, provided that:
>
> (1) The petition is filed promptly after the person becomes aware that the Office has accorded, or will accord, a filing date based upon an incorrect entry by the USPS;
>
> (2) The number of the "Express Mail" mailing label was placed on the paper(s) or fee(s) that constitute the correspondence prior to the original mailing by "Express Mail"; and
>
> (3) The petition includes a showing which establishes, to the satisfaction of the Commissioner, that the requested filing date was the date the correspondence was deposited in "Express Mail Post Office to Addressee" service prior to the last scheduled pickup for that day. Any showing pursuant to this paragraph must be corroborated by evidence from the USPS or that came into being after deposit and within one business day of the deposit of the correspondence in the "Express Mail Post Office to Addressee" service of the USPS.

A grantable petition under 37 CFR 1.10(d) must include "a showing which establishes, to the satisfaction of the Commissioner, that the requested filing date was the date the correspondence was deposited in "Express Mail Post Office to Addressee" service prior to the last scheduled pickup for that day." In addition, the showing "must be corroborated by evidence from the USPS or that came into being after deposit and within one business day of the deposit of the correspondence in the 'Express Mail Post Office to Addressee' service of the USPS."

The petition filed January 21, 2004 is accompanied by the corroborating evidence required by the rule. Accordingly, the petition is **GRANTED**. No petition fee has been or will be charged in connection with this matter.

The application is being returned to the Office of Initial Patent Examination for correction of the filing date to **November 12, 2003** and the mailing of a corrected filing receipt.

Thereafter, the application will be forwarded to Technology Center Art Unit 2882 for examination in due course.

Any inquiries related to this decision should be directed to the undersigned at (703) 308-6712.

E. Shirene Willis

E. Shirene Willis
Senior Petitions Attorney
Office of Petitions

UNITED STATES PATENT AND TRADEMARK OFFICE

COMMISSIONER FOR PATENTS
UNITED STATES PATENT AND TRADEMARK OFFICE
P.O. BOX 1450
ALEXANDRIA, VA 22313-1450
www.uspto.gov

Bingham, McCutchen LLP
Three Embarcadero Center
18th Floor
San Francisco, CA 94111-4067

MAIL

JUN 2 0 2005

DIRECTOR OFFICE
TECHNOLOGY CENTER 2100

In re Application of: Joseph Wells
Application No. 10/712,979
Filed: November 12, 2003
For: STATIC CODE IMAGE MODELING AND RECOGNITION

DECISION ON PETITION TO MAKE SPECIAL UNDER 37 C.F.R. §1.102(d) AND M.P.E.P.§708.02(XI)

This is a decision on the petition to make special filed August 6, 2004 under 37 C.F.R. §1.102(d) and M.P.E.P. §708.02(XI): Inventions For Countering Terrorism.

The petition is **DISMISSED**.

M.P.E.P. §708.02(XI), which sets forth the prerequisites for a grantable petition for Inventions For Countering Terrorism under 37 C.F.R. § 1.102(d), states in relevant part:

> International terrorism as defined in 18 U.S.C. 2331 includes "activities that - (A) involve violent acts or acts dangerous to human life that are a violation of the criminal laws of the United States or of any State, or that would be a criminal violation if committed within the jurisdiction of the United States or of any State; [and] (B) appear to be intended - (i) to intimidate or coerce a civilian population; (ii) to influence the policy of a government by intimidation or coercion; or (iii) to affect the conduct of a government by assassination or kidnapping..." The types of technology for countering terrorism could include, but are not limited to, systems for detecting/identifying explosives, aircraft sensors/security systems, and vehicular barricades/disabling systems.
>
> Applicants who desire that an application relating to inventions for countering terrorism be made special should file a petition **with the petition fee under 37 CFR 1.17(h)** [emphasis added] requesting the U.S. Patent and Trademark Office to make the application special. The petition for special status should be accompanied by a statement explaining how the invention contributes to countering terrorism.

Petitioner's submission fails to meet the criteria set out with respect to countering terrorism in M.P.E.P. §708.02(XI). The petition failed to include the necessary fee under 37 CFR 1.17(h).

In addition, the disclosed and claimed invention is generally directed to a method and system for processing network traffic content including receiving a content stream having an operation code and an operand.

Petitioner does not establish a sufficient nexus between the disclosed and claimed invention and preventing "violent acts or acts dangerous to human life that are a violation of the criminal laws of the United States or of any State" or activities "that would be a criminal violation if committed within the jurisdiction of the United States or of any State", or preventing acts that appear to be intended to intimidate or coerce a civilian population, influence the policy of a government by intimidation or coercion, or affect the conduct of a government by assassination or kidnapping.

As a result, no advancement in the technology of countering terrorism has been persuasively shown.

Accordingly, the petition is **DISMISSED**. The application will be returned to the examiner's docket to await examination in its proper turn based on its effective filing date.

Any request for reconsideration must be filed within TWO MONTHS of the mailing date of this decision.

It is suggested that Applicant review M.P.E.P. §708.02 regarding other grounds available for filing a petition to make special. In particular, note M.P.E.P. §708.02(VIII): Accelerated Examination, which does not place limitations on the subject matter of the application.

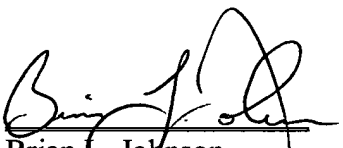

Brian L. Johnson
Special Programs Examiner
Technology Center 2100
Computer Architecture, Software, and Information Security
(571) 272-3595

6/13/05

UNITED STATES PATENT AND TRADEMARK OFFICE

Commissioner for Patents
United States Patent and Trademark Office
P.O. Box 1450
Alexandria, VA 22313-1450
www.uspto.gov

Benesch, Friedlander, Coplan & Aronoff, LLP
Attn: IP Department Docket Clerk
2300 BP Tower
200 Public Square
Cleveland, OH 44114

FAX RECEIVED

MAY 25 2005

OFFICE OF PETITIONS

In re Application of :
Gene Kirila :
Application No. 10/712,984 : ON PETITION
Filed: November 12, 2003 :
Attorney Docket No. 26803-30 :

This is a decision on the petition under 37 CFR 1.137(b), filed November 9, 2004, to revive the above-identified application.

In response to the Notice to File Missing Parts mailed February 25, 2004, petitioner submitted $685 for the petition to revive fee, $395 for the filing fee, $44 for additional claims, an Oath/Declaration, and a $65 surcharge for the late filing of the Oath/Declaration.

Since Petitioner has met the requirements to revive the above-identified application, pursuant to 37 CFR 1.137(b), the petition is **GRANTED**.

The application file is being referred to the Office of Initial Patent Examination for further processing, in due course.

Telephone inquiries concerning this decision should be directed to the undersigned at (571) 272-3226.

Andrea Smith
Petitions Examiner
Office of Petitions
Office of the Deputy Commissioner
for Patent Examination Policy

SPE RESPONSE FOR CERTIFICATE OF CORRECTION

Paper No.: _____

DATE : 04/20/09

TO SPE OF : ART UNIT 1616

SUBJECT : Request for Certificate of Correction for Appl. No.: 10712990 Patent No.: 7354604 B2

Please respond to this request for a certificate of correction within 7 days.

FOR IFW FILES:

Please review the requested changes/corrections as shown in the **COCIN** document(s) in the IFW application image. No new matter should be introduced, nor should the scope or meaning of the claims be changed.

Please complete the response (see below) and forward the completed response to scanning using document code **COCX**.

FOR PAPER FILES:

Please review the requested changes/corrections as shown in the attached certificate of correction. Please complete this form (see below) and forward it with the file to:

Certificates of Correction Branch (CofC)
South Tower - 9A22
Palm Location 7580

You can fax the Directors/SPE response to 571-270-9990

LAMONTE NEWSOME
Certificates of Correction Branch
703-308-9390 ext. 112

Thank You For Your Assistance

The request for issuing the above-identified correction(s) is hereby:
Note your decision on the appropriate box.

xApproved	**All** changes apply.
❑ **Approved in Part**	Specify below which changes **do not** apply.
❑ **Denied**	State the reasons for denial below.

Comments: _____

_____

_____

_____

_____

SPE RESPONSE FOR CERTIFICATE OF CORRECTION

/Johann Richter/ SPE 1616

SPE Art Unit

UNITED STATES PATENT AND TRADEMARK OFFICE

Commissioner for Patents
United States Patent and Trademark Office
P.O. Box 1450
Alexandria, VA 22313-1450
www.uspto.gov

Paper No. 052505

04586
ROSENBERG, KLEIN & LEE
3458 ELLICOTT CITY, MD
21043

JUN - 1 2005

In re Application of:
Wang-Tsai Lee
Serial No.: 10/713,009
Filed: November 17, 2003

NOTICE OF WITHDRAWAL
FROM ISSUE
UNDER 37 CFR § 1.313

The purpose of this communication is to inform you that the above-identified application is being withdrawn from issue pursuant to 37 CFR § 1.313.

The above-identified application is hereby withdrawn from issue. The Notice of Allowance and Issue Fee Due and the Notice of Allowability mailed February 18, 2005, are hereby VACATED.

The application is being withdrawn to permit reopening of prosecution. The reasons therefor will be communicated to you by the examiner.

Upon receipt of a new Notice of Allowance and Issue Fee Due, applicant may request that any previously submitted issue fee be applied toward payment of the issue fee in the amount identified on the new Notice of Allowance and Issue Fee Due. If the application is abandoned, applicant may request either a refund, or a credit to a Deposit Account.

Telephone inquires should be directed to Lynn Feild at (571) 272-2092.

The above-identified application is being forwarded to the examiner for prompt appropriate action.

Richard K. Seidel, Director
Technology Center 2800
Semiconductors, Electrical and Optical
Systems and Components