PTO/SB/66 (03-09)
Approved for use through 03/31/2012. OMB 0651-0016
U.S. Patent and Trademark Office: U.S. DEPARTMENT OF COMMERCE
Under the Paperwork Reduction Act of 1995, no persons are required to respond to a collection of information unless it displays valid OMB control number.

PETITION TO ACCEPT UNINTENTIONALLY DELAYED PAYMENT OF MAINTENANCE FEE IN AN EXPIRED PATENT (37 CFR 1.378(c))

Patent Number	Issue Date (YYYY-MM-DD)	Application Number	Filing Date (YYYY-MM-DD)	Docket Number (if applicable)
6928712	2005-08-16	10/734,989	2003-12-12	02-048

CAUTION: Maintenance fee (and surcharge, if any) payment must correctly identify: (1) the patent number and (2) the application number of the actual U.S. application leading to issuance of that patent to ensure the fee(s) is/are associated with the correct patent. 37 CFR 1.366(c) and (d).

SMALL ENTITY

☐ Patentee claims, or has previously claimed, small entity status. See 37 CFR 1.27.

LOSS OF ENTITLEMENT TO SMALL ENTITY STATUS

☐ Patentee is no longer entitled to small entity status. See 37 CFR 1.27(g)

NOT Small Entity

	Fee	Code
◉	3 ½ year	(1551)
○	7 ½ year	(1552)
○	11 ½ year	(1553)

Small Entity

	Fee	Code
○	3 ½ year	(2551)
○	7 ½ year	(2552)
○	11 ½ year	(2553)

SURCHARGE

The surcharge required by 37 CFR 1.20(i)(2) (Fee Code 1558) must be paid as a condition of accepting unintentionally delayed payment of the maintenance fee.

MAINTENANCE FEE (37 CFR 1.20(e)-(g))

The appropriate maintenance fee must be submitted with this petition.

STATEMENT

THE UNDERSIGNED CERTIFIES THAT THE DELAY IN PAYMENT OF THE MAINTENANCE FEE TO THIS PATENT WAS UNINTENTIONAL

PETITIONER(S) REQUEST THAT THE DELAYED PAYMENT OF THE MAINTENANCE FEE BE ACCEPTED AND THE PATENT REINSTATED

THIS PORTION MUST BE COMPLETED BY THE SIGNATORY OR SIGNATORIES

37 CFR 1.378(d) states: "Any petition under this section must be signed by an attorney or agent registered to practice before the Patent and Trademark Office, or by the patentee, the assignee, or other party in interest."

I certify, in accordance with 37 CFR 1.4(d)(4) that I am

◉ An attorney or agent registered to practice before the Patent and Trademark Office

○ A sole patentee

○ A joint patentee; I certify that I am authorized to sign this submission on behalf of all the other patentees.

○ A joint patentee; all of whom are signing this e-petition

○ The assignee of record of the entire interest

Patent Practitioner			
A signature of the applicant or representative is required in accordance with 37 CFR 1.33 and 10.18. Please see 37 CFR 1.4(d) for the form of the signature			
Signature	/Jennifer M Brumbaugh/	Date (YYYY-MM-DD)	2010-01-14
Name	Jennifer M. Brumbaugh	Registration Number	48465

This collection of information is required by 37 CFR 1.378(c). The information is required to obtain or retain a benefit by the public which is to file (and by the USPTO to process) an application. Confidentiality is governed by 35 U.S.C. 122 and 37 CFR 1.11 and 1.14. This collection is estimated to take 1 hour to complete, including gathering, preparing, and submitting the completed application form to the USPTO. Time will vary depending upon the individual case. Any comments on the amount of time you require to complete this form and/ or suggestions for reducing this burden, should be sent to the Chief Information Officer, U.S. Patent and Trademark Office, U.S. Department of Commerce, P.O. Box 1450, Alexandria, VA 22313-1450. DO NOT SEND FEES OR COMPLETED FORMS TO THIS ADDRESS. **This form can only be used when in conjunction with EFS-Web. If this form is mailed to the USPTO, it may cause delays in reinstating the patent.**

Privacy Act Statement

The Privacy Act of 1974 (P.L. 93-579) requires that you be given certain information in connection with your submission of the attached form related to a patent application or patent. Accordingly, pursuant to the requirements of the Act, please be advised that: (1) the general authority for the collection of this information is 35 U.S.C. 2(b)(2); (2) furnishing of the information solicited is voluntary; and (3) the principal purpose for which the information is used by the U.S. Patent and Trademark Office is to process and/or examine your submission related to a patent application or patent. If you do not furnish the requested information, the U.S. Patent and Trademark Office may not be able to process and/or examine your submission, which may result in termination of proceedings or abandonment of the application or expiration of the patent.

The information provided by you in this form will be subject to the following routine uses:

1. The information on this form will be treated confidentially to the extent allowed under the Freedom of Information Act (5 U.S.C. 552) and the Privacy Act (5 U.S.C. 552a). Records from this system of records may be disclosed to the Department of Justice to determine whether the Freedom of Information Act requires disclosure of these records.

2. A record from this system of records may be disclosed, as a routine use, in the course of presenting evidence to a court, magistrate, or administrative tribunal, including disclosures to opposing counsel in the course of settlement negotiations.

3. A record in this system of records may be disclosed, as a routine use, to a Member of Congress submitting a request involving an individual, to whom the record pertains, when the individual has requested assistance from the Member with respect to the subject matter of the record.

4. A record in this system of records may be disclosed, as a routine use, to a contractor of the Agency having need for the information in order to perform a contract. Recipients of information shall be required to comply with the requirements of the Privacy Act of 1974, as amended, pursuant to 5 U.S.C. 552a(m).

5. A record related to an International Application filed under the Patent Cooperation Treaty in this system of records may be disclosed, as a routine use, to the International Bureau of the World Intellectual Property Organization, pursuant to the Patent Cooperation Treaty.

6. A record in this system of records may be disclosed, as a routine use, to another federal agency for purposes of National Security review (35 U.S.C. 181) and for review pursuant to the Atomic Energy Act (42 U.S.C. 218(c)).

7. A record from this system of records may be disclosed, as a routine use, to the Administrator, General Services, or his/her designee, during an inspection of records conducted by GSA as part of that agency's responsibility to recommend improvements in records management practices and programs, under authority of 44 U.S.C. 2904 and 2906. Such disclosure shall be made in accordance with the GSA regulations governing inspection of records for this purpose, and any other relevant (i.e., GSA or Commerce) directive. Such disclosure shall not be used to make determinations about individuals.

8. A record from this system of records may be disclosed, as a routine use, to the public after either publication of the application pursuant to 35 U.S.C. 122(b) or issuance of a patent pursuant to 35 U.S.C. 151. Further, a record may be disclosed, subject to the limitations of 37 CFR 1.14, as a routine use, to the public if the record was filed in an application which became abandoned or in which the proceedings were terminated and which application is referenced by either a published application, an application open to public inspections or an issued patent.

9. A record from this system of records may be disclosed, as a routine use, to a Federal, State, or local law enforcement agency, if the USPTO becomes aware of a violation or potential violation of law or regulation.

UNITED STATES PATENT AND TRADEMARK OFFICE

Commissioner for Patents
United States Patent and Trademark Office
P.O. Box 1450
Alexandria, VA 22313-1450
www.uspto.gov

In re Patent No. 6928712
Issue Date: August 16,2005
Application No. 10734989
Filed: December 12,2003
Attorney Docket No. GKNG 1185 PUS

:
:DECISION GRANTING PETITION
:UNDER 37 CFR 1.378(c)
:

This is a decision on the electronic petition, filed January 14,2010 ,under 37 CFR 1.378(c) to accept the unintentionally delayed payment of the 3.5 year maintenance fee for the above-identified patent.

The petition is **GRANTED**.

The maintenance fee is accepted, and the above-identified patent reinstated as of January 14,2010 .
This decision also constitutes notice that the fee has been accepted. An electronic copy of the petition and this decision has been created as an entry in the Image File Wrapper. Nevertheless, petitioner should print and retain an independent copy.

Telephone inquiries related to this electronic decision should be directed to the Electronic Business Center at 1-866-217-9197.

UNITED STATES PATENT AND TRADEMARK OFFICE

Commissioner for Patents
United States Patent and Trademark Office
P.O. Box 1450
Alexandria, VA 22313-1450
www.uspto.gov

MCKELLAR IP LAW, PLLC
784 SOUTH POSEYVILLE ROAD
MIDLAND, MI 48640

COPY MAILED

JUL 29 2008

In re Application of :
RASOR, Allen C. Sr. :
Application No. 10/735,015 : DECISION ON PETITION
Filed: December 12, 2003 : UNDER 37 CFR 1.137(b)
Attorney Docket No. **MSH-489** :

This is a decision on the petition under 37 CFR 1.137(b), filed April 30, 2007, to revive the above-identified application.

The petition is **GRANTED.**

The application became abandoned for failure to timely file a reply within the meaning of 37 CFR 1.113 to the final Office action of January 12, 2006. The proposed reply required for consideration of a petition to revive must be a Notice of Appeal (and appeal fee required by 37 CFR 41.20(b)(2), an amendment that *prima facie* places the application in condition for allowance, a Request for Continued Examination and submission (37 CFR 1.114), or the filing of a continuing application under 37 CFR 1.53(b). See MPEP 711.03(c)(II)(A)(2). Accordingly, the date of abandonment of this application is April 13, 2006.

37 CFR 1.137(b)(3) requires a statement that "the entire delay in filing the required reply from the due date for the reply until the filing of a grantable petition pursuant to 37 CFR 1.137(b) was unintentional." Since the statement appearing in the petition varies from the language required by 37 CFR 1.137(b)(3), the statement is being construed as the required statement. Petitioner must notify the Office if this is not a correct reading of the statement appearing in the petition.

The petition is not accompanied by a statement of express abandonment in favor of the filing of a continuing application. In order to facilitate action, the petition to revive should include reference to the filing of a continuing application and a letter of express abandonment, conditional upon the granting of the petition and of a filing date to the continuing application. Nevertheless, in view of the statement that the reply is the filing of a continuing application, the statement will be construed as a request to expressly abandon this application in favor of the continuing application. If this was not the intent of applicant, the Office should be promptly notified.

The petition satisfies the requirements of 37 CFR 1.137(b) in that petitioner has supplied (1) the reply in the form of a continuing application under 37 CFR 1.53(b); (2) the petition fee of $750; and (3) an adequate statement of unintentional delay.

This application is being revived solely for purposes of continuity. As continuity has been established by this decision, the application is again abandoned in favor of continuing application 11/799,371 filed April 30, 2007.

Telephone inquiries concerning this decision should be directed to Monica A. Graves at (571) 272-7253.

Brian W. Brown
Petitions Examiner
Office of Petitions

UNITED STATES PATENT AND TRADEMARK OFFICE

Commissioner for Patents
United States Patent and Trademark Office
P.O. Box 1450
Alexandria, VA 22313-1450
www.uspto.gov

PATRICK W. RASCHE
ARMSTRONG TEASDALE LLP
ONE METROPOLITAN SQUARE, SUITE 2600
ST. LOUIS MO 63102

COPY MAILED

JUL 17 2006

OFFICE OF PETITIONS

In re Application of	:	
Lamke, Samuel F.	:	
Application No. 10/735,032	:	ON PETITION
Filed: December 12, 2003	:	
Attorney Docket No. 23937-78	:	

This is a decision on the petition under 37 C.F.R. § 1.137(b), filed February 3, 2006, to revive the above-identified application.

The petition is **GRANTED.**

The petition satisfies the conditions for revival pursuant to the provisions of 37 CFR 1.137(b) in that (1) the reply in the form of an Amendment and an Information Disclosure Statement; (2) the petition fee; and (3) the required statement of unintentional delay have been received. Accordingly, the response has been accepted as having been unintentionally delayed.

This matter is being referred to Technology Center 3600 for further examination on the merits.

Telephone inquiries regarding this decision should be directed to the undersigned at (571) 272-3282.

Liana Chase
Petitions Examiner
Office of Petitions

UNITED STATES PATENT AND TRADEMARK OFFICE

Commissioner for Patents
United States Patent and Trademark Office
P.O. Box 1450
Alexandria, VA 22313-1450
www.uspto.gov

August 3, 2005

Albert L. Schmeiser
SCHMEISER. OLSEN & WATTS LLP
18 East University Drive #101
Mesa, Arizona 85201

Patent No.: **6908156 B1**
Inventor(s): **Myung Won Park, et al.**
Issued: June 21, 2005
Title: **ROUND RECLINER FOR VEHICLE**

Re: Request for Certificate of Correction

Consideration has been given your request for the issuance of a certificate of correction for the above-identified patent under the provisions of Rule(s) 1.322 and/or 1.323.

Assignees' names and addresses (assignment data) printed in a patent, are based *solely* on information supplied in the appropriate space for identifying the assignment data, i.e., item 3 of the Issue Fee Transmittal Form PTOL-85B. Granting of a request under 37 CFR 3.81(b) is required to correct applicant's error providing ***incorrect or erroneous*** assignment data, *before* issuance of a Certificate of Correction, under 37 CFR 1.323 *(see Manual of Patent Examining Procedures (M.P.E.P) Chp.1400, sect. 1481).* This procedure is required *at any time after the issue fee is paid*, including after issuance of the patent.

In view of the foregoing, your request, in this mater, is hereby denied.

A request to correct the Assignee under 37 CFR 3.81(b) should include:

A. **the processing fee set forth in 37 CFR 1.117(h) (currently $130);**
B. a statement that the failure to include the correct assignee name on the PTOL-85B was inadvertent; and
C. a copy of the Notice of Recordation of Assignment Document, reflecting the reel and frame number where the assignment(s) is recorded and/or reflecting proof of *the date* the assignment was submitted for recordation.

In the Request, Applicant(s) may request that the file be forwarded to Certificates of Correction Branch, for issuance of a Certificate of Correction, if the Request is granted.

Any request under 37 CFR 3.81(b) should be directed to the following address or facsimile number:

By mail:	Mail Stop PETITIONS Commissioner for Patents Post Office Box 1450 Alexandria, VA 22313-1450
By hand:	Customer Service Window Mail Stop Petitions Randolph Building 401 Dulany Street Alexandria, VA 22314
By fax:	(703) 872-9306 ATTN: Office of Petitions

If a fee (currently $100) was previously submitted for consideration of a Request for Certificate of Correction, under CFR 1.323, to correct assignment data, no additional fee is required.

Virginia Tolbert
For Cecelia Newman
Decisions & Certificates
of Correction Branch
(703) **308-9390 ext 113** or (703) 308-8309

vt

UNITED STATES PATENT AND TRADEMARK OFFICE

Commissioner for Patents
United States Patent and Trademark Office
P.O. Box 1450
Alexandria, VA 22313-1450
www.uspto.gov

Date : June 24, 2009

Patent No. :6908156
Inventor(s) :Park, et al.
Issued :June 21. 2005
Title :ROUND TYPE RECLINER FOR VEHICLES

Re: Request for Certificate of Correction

Consideration has been given your request for the issuance of a certificate of correction for the above-identified patent under the provisions of 37 CFR 1.322 and/or 1.323.

Assignees' names and addresses (assignment data) printed in a patent are based *solely* on information supplied in the appropriate space for identifying the assignment data, i.e., item 3 of the Fee(s) Transmittal Form PTOL-85B. After payment of the issue fee, correction of assignment data submitted on the PTOL-85B can only be done by Certificate of Correction under 37 CFR 1.323, with a request under 37 CFR 3.81(b).

A request for a patent to be corrected to state the name of the assignee must:

A. state that the assignment was submitted for recordation as set forth in 37 CFR 3.11 before issuance of the patent;

B. include a request for a certificate of correction under 37 CFR 1.323 along with the fee set forth in 37 CFR 1.20(a); and

C. include the processing fee set forth in 37 CFR 1.17(i).

If the request is granted, Certificates of Correction Branch will be notified that a Certificate of Correction may be issued.

See Manual of Patent Examining Procedure, Section 1481.01 (Rev. 3) (Oct. 2005).

Applicant has not included items A and or C above, accordingly, the request for Certificate of Correction to add or change the assignee data is dismissed.

Any request under 37 CFR 3.81(b) should be directed to the following address or facsimile number:

By mail: Mail Stop PETITIONS
Commissioner for Patents
Post Office Box 1450
Alexandria, VA 22313-1450

By hand:	Customer Service Window Randolph Building 401 Dulany Street Alexandria, VA 22314
By fax:	571-273-8300 ATTN: Office of Petitions
EFS web	uspto.gov/ebc/index.html (must be registered as an e-filer to submit responses) Technical Support 1-866-217-9197

Any inquiry concerning this communication should be directed to Ms. A. Green at (703) 756-1541.

Ms. Mary Diggs, Supervisor
Decisions & Certificates
of Correction Branch
(703) 756-1580 or (703) 756- 1541

Albert L. Schmeiser
Schemeiser, Olsen & Watts
18 E. University Drive
Mesa, Arizona 85201

/arg

UNITED STATES PATENT AND TRADEMARK OFFICE

Commissioner for Patents
United States Patent and Trademark Office
P.O. Box 1450
Alexandria, VA 22313-1450
www.uspto.gov

SCHMEISER OLSEN & WATTS
18 E UNIVERSITY DRIVE
SUITE # 101
MESA AZ 85201

MAILED

APR 09 2010

OFFICE OF PETITIONS

In re Patent No. 6,908,156	:	
Issued: June 21, 2005	:	
Application No. 10/735,034	:	ON PETITION
Filed: December 12, 2003	:	
Attorney Docket No. KPAT-10163	:	

This is a decision on the petition, filed February 4, 2010, which is being treated as a request under 37 CFR 3.81(b)[1] to change the assignee on the issued patent.

The request is **DISMISSED**.

37 CFR 3.81(a) permits the patent to issue to the assignee, provided that, at the time the issue fee is paid, the name and correct address of an assignee is provided. 37 CFR 3.81(b) permits the patent to issue in the name and correct address of an assignee if the assignment was submitted after payment of the issue fee but ***prior to issuance of a patent***. Patent and Trademark Office assignment records disclose that an assignment correcting the assignee's name from "YOON YOUNG CO., LTD." to "AUSTEM CO., LTD." was recorded on July 5, 2005, after the date of issuance of this patent.

Accordingly, since the assignment was not submitted for recordation until after issuance of this patent, issuance of a certificate of correction would not be proper. *See* MPEP Section 307.

Inquiries concerning this decision should be directed to the undersigned at (571) 272-7751.

Joan Olszewski
Petitions Examiner
Office of Petitions

[1] *See* Official Gazette of June 22, 2004

SPE RESPONSE FOR CERTIFICATE OF CORRECTION

Paper No.: _____

DATE : Mar. 2, 2006

TO SPE OF : ART UNIT 2817 (*Robert Pascal*)

SUBJECT : Request for Certificate of Correction on Patent No.: 6,967,528

A response is requested with respect to the accompanying request for a certificate of correction. This response is for an IFW application, **please send this form with your decision - to be scanned into the IFW contents as DOC CODE: COCX**.

then return a message in MADRAS to Team: PUBSCofC, User: employee (named below). Please complete this form and have it scanned, within 7 days.

With respect to the change(s) requested, correcting Office and/or Applicant's errors, should the patent read as shown in the certificate of correction (COCIN)? No new matter should be introduced, nor should the scope or meaning of the claims be changed.

The substitute spec. was not printed, but the original, was the sub-spec approved. Your denial or approval decision is needed below.

sp STA STACY POWELL

Thank You For Your Assistance

Certificates of Correction Branch
Tel. No. 703-308-9390 x120

The request for issuing the above-identified correction(s) is hereby:

Note your decision on the appropriate box.

☑ **Approved**	**All** changes apply.
☐ **Approved in Part**	Specify below which changes **do not** apply.
☐ **Denied**	State the reasons for denial below.

Comments:

_____

_____

_____

_____

_____

Robert E. Pascal — 2817

SPE **Art Unit**

UNITED STATES PATENT AND TRADEMARK OFFICE

COMMISSIONER FOR PATENTS
UNITED STATES PATENT AND TRADEMARK OFFICE
P.O. BOX 1450
ALEXANDRIA, VA 22313-1450
www.uspto.gov

Paper No.

MORGAN & FINNEGAN, L.L.P.
3 WORLD FINANCIAL CENTER
NEW YORK NY 10281-2101

COPY MAILED

JAN 25 2007

OFFICE OF PETITIONS

In re Application of :
Kuriyama et al. : DECISION ON APPLICATION
Application No. 10/735,062 : FOR
Filed: December 11, 2003 : PATENT TERM ADJUSTMENT
Atty Docket No. 1232-5237 :

This is a decision on the "PETITION FOR RECONSIDERATION OF PATENT TERM ADJUSTMENT," filed November 29, 2006. Applicants request that the initial determination of patent term adjustment under 35 U.S.C. 154(b) be corrected from four hundred eleven (411) days to four hundred seventeen (417) days.

The application for patent term adjustment is **GRANTED**.

The Office has updated the PAIR screen to reflect that the correct Patent Term Adjustment (PTA) determination at the time of the mailing of the notice of allowance is four hundred seventeen **(417)** days. A copy of the updated PAIR screen, showing the correct determination, is enclosed.

On November 7, 2006, the Office mailed the Determination of Patent Term Adjustment under 35 U.S.C. 154(b) in the above-identified application. The Notice stated that the patent term adjustment (PTA) to date is 411 days. On November 29, 2006, applicants timely submitted the instant application for patent term adjustment[1]. Applicants state that an Information Disclosure Statement (IDS) was filed on February 7 (not February 13), 2006. Accordingly, the reduction pursuant to 37 CFR 1.704(c)(8) is 1 day, not 7 days. In support thereof, applicants point to the Image File Wrapper (IFW) for this application, supply a copy of the IDS as filed with a February 7, 2006 date-stamp thereon, and provide a copy of their itemized

[1] PALM records indicate that the Issue Payment was filed on November 29, 2006.

and date-stamped return postcard acknowledge receipt of the IDS on February 7, 2006.

Applicants state that the application is not subject to a terminal disclaimer.

Applicants are correct. The postcard evidence and application history show that the IDS is properly considered filed on February 7, 2006. No further IDS was filed on February 13, 2006. Accordingly, the IDS was filed 1 day after a reply filed February 6, 2006, and thus, the period of reduction pursuant to 37 CFR 1.704(c)(8) is 1 day.

In view thereof, the correct determination of patent term adjustment at the time of the mailing of the notice of allowance is 417 days.

Receipt of the $200.00 fee set forth in 37 CFR 1.18(e) is acknowledged. No additional fees are required.

The application is being forwarded to the Office of Patent Publication for issuance of the patent. The patent term adjustment indicated on the patent will include any additional patent term adjustment accrued for Office delay in issuing the patent after payment of the issue fee and all outstanding requirements having been met.

Telephone inquiries specific to this matter should be directed to the undersigned at (571) 272-3219.

Nancy Johnson
Senior Petitions Attorney
Office of Petitions

Enclosure: Copy of REVISED PAIR Screen

Day : Tuesday
Date: 1/23/2007

PALM INTRANET

Time: 13:10:21

PTA Calculations for Application: 10/735062			
Application Filing Date:	12/11/2003	PTO Delay (PTO):	420
Issue Date of Patent:		Three Years:	0
Pre-Issue Petitions:	0	Applicant Delay (APPL):	9
Post-Issue Petitions:	0	Total PTA (days):	417
PTO Delay Adjustment:	6		

File Contents History

Number	Date	Contents Description	PTO	APPL	START
45	01/23/2007	ADJUSTMENT OF PTA CALCULATION BY PTO		1	
44	01/23/2007	ADJUSTMENT OF PTA CALCULATION BY PTO	7		
37	11/07/2006	MAIL NOTICE OF ALLOWANCE	154		27
36	11/03/2006	ISSUE REVISION COMPLETED			
35	11/03/2006	DOCUMENT VERIFICATION			
34	11/03/2006	NOTICE OF ALLOWANCE DATA VERIFICATION COMPLETED			
33	11/03/2006	CASE DOCKETED TO EXAMINER IN GAU			
32	02/07/2006	REFERENCE CAPTURE ON IDS			
31	02/21/2006	NOTICE OF ALLOWABILITY			
30	02/13/2006	INFORMATION DISCLOSURE STATEMENT CONSIDERED			
29	02/13/2006	INFORMATION DISCLOSURE STATEMENT (IDS) FILED		7	27
28	02/10/2006	DATE FORWARDED TO EXAMINER			
27	02/06/2006	RESPONSE AFTER NON-FINAL ACTION		2	26
26	11/04/2005	MAIL NON-FINAL REJECTION	266		-1
25	10/31/2005	NON-FINAL REJECTION			
24	04/26/2005	MISCELLANEOUS INCOMING LETTER			
23	01/25/2005	CASE DOCKETED TO EXAMINER IN GAU			
22	01/18/2005	CASE DOCKETED TO EXAMINER IN GAU			
21	01/04/2005	CASE DOCKETED TO EXAMINER IN GAU			
20	11/09/2004	CASE DOCKETED TO EXAMINER IN GAU			
19	08/09/2004	CORRESPONDENCE ADDRESS CHANGE			
18	05/12/2004	IFW TSS PROCESSING BY TECH CENTER COMPLETE			
17	05/12/2004	CASE DOCKETED TO EXAMINER IN GAU			

16	04/26/2004	REQUEST FOR FOREIGN PRIORITY (PRIORITY PAPERS MAY BE INCLUDED)			
15	05/06/2004	APPLICATION RETURN FROM OIPE			
14	05/06/2004	APPLICATION IS NOW COMPLETE			
13	05/06/2004	APPLICATION RETURN TO OIPE			
12	05/06/2004	APPLICATION RETURN FROM OIPE			
11	05/06/2004	APPLICATION RETURN TO OIPE			
10	05/06/2004	APPLICATION DISPATCHED FROM OIPE			
9	05/06/2004	APPLICATION IS NOW COMPLETE			
8	04/23/2004	ADDITIONAL APPLICATION FILING FEES			
7	04/23/2004	A STATEMENT BY ONE OR MORE INVENTORS SATISFYING THE REQUIREMENT UNDER 35 USC 115, OATH OF THE APPLIC			
6	03/22/2004	NOTICE MAILED--APPLICATION INCOMPLETE--FILING DATE ASSIGNED			
5	02/27/2004	CLEARED BY L&R (LARS)			
4	02/17/2004	REFERRED TO LEVEL 2 (LARS) BY OIPE CSR			
3	02/17/2004	CASE CLASSIFIED BY L&R			
2	01/09/2004	IFW SCAN & PACR AUTO SECURITY REVIEW			
1	12/11/2003	INITIAL EXAM TEAM NN			

Search Another: Application# Search

EXPLANATION OF PTA CALCULATION

EXPLANATION OF PTE CALCULATION

To go back use Back button on your browser toolbar.

Back to PALM | ASSIGNMENT | OASIS | Home page

UNITED STATES PATENT AND TRADEMARK OFFICE

Commissioner for Patents
United States Patent and Trademark Office
P.O. Box 1450
Alexandria, VA 22313-1450
www.uspto.gov

MORGAN & FINNEGAN, L.L.P.
3 WORLD FINANCIAL CENTER
NEW YORK NY 10281-2101

COPY MAILED

JUN 09 2008

OFFICE OF PETITIONS

In re Patent No. 7,183,127 :
Issue Date: February 27, 2007 :
Application No. 10/735,062 : ON PETITION
Filed: December 11, 2003 :
Attorney Docket No. :

This is a decision on the petition filed February 20, 2008, which is being treated as a request under 37 CFR 3.81(b)[1] to correct the name of the assignee on the front page of the above-identified patent by way of a Certificate of Correction.

The request is **GRANTED**.

Telephone inquiries concerning this decision may be directed to Carl Friedman at (571) 272-6842. Inquiries regarding the issuance of a certificate of correction should be directed to the Certificate of Correction Branch at (571) 272-4200.

The Certificates of Correction Branch will be notified of this decision granting the petition under 37 CFR 3.81(b) and directing issuance of the requested Certificate of Correction.

The application is forwarded to Technology Center Art Unit 2826 for consideration of the Certificate of Correction in regard to the correction of Column 7, Line 51.

Carl Friedman
Petitions Examiner
Office of Petitions

[1] *See* MPEP 1309, subsection II; and Official Gazette of June 22, 2004.

UNITED STATES PATENT AND TRADEMARK OFFICE

Commissioner for Patents
United States Patent and Trademark Office
P.O. Box 1450
Alexandria, VA 22313-1450
www.uspto.gov

Patrick J. Halloran
Aventis Pasteur
Knerr Building
Swiftwater PA 18370

COPY MAILED

SEP 1 6 2005

OFFICE OF PETITIONS

In re Application of :
Veronique BARBAN et al. :
Application No. 10/735,064 : ON PETITION
Filed: December 12, 2003 :
Attorney Docket No. API-02-14-US :

This is a decision on the petition under 37 CFR 1.137(b), filed July 18, 2005, to revive the above-identified application.

The petition is **GRANTED**.

The above-identified application became abandoned for failure to reply in a timely manner to the restriction requirement mailed January 5, 2005, which set a shortened statutory period for reply of one (1) month. No extensions of time under the provisions of 37 CFR 1.136(a) were obtained. Accordingly, the above-identified application became abandoned on February 6, 2005.

The petition satisfies the conditions for revival pursuant to the provisions of 37 CFR 1.137(b) in that (1) the reply in the form of an election; (2) the petition fee of $1500; and the required statement of unintentional delay have been received. Accordingly, the reply to the restriction requirement of January 5, 2005 is accepted as having been unintentionally delayed.

The file does not indicate a change of address has been submitted, although the address given on the petition differs from the address of record. If appropriate, a change of address should be filed in accordance with MPP 601.03. A courtesy copy of this decision is being mailed to the address given on the petition; however, the office will mail all future correspondence solely to the address of record.

Telephone inquiries concerning this decision should be directed to David A. Bucci at (571) 272-7099 or in his absence, the undersigned at (571) 272-3217.

The application file is being referred to Technology Center AU 1648 for appropriate action on the concurrently filed election.

Frances Hicks for

Brian Hearn
Petitions Examiner
Office of Petitions

Cc: Patrick J. Halloran
3141 Muirfield Road
Center Valley, PA 18034

UNITED STATES PATENT AND TRADEMARK OFFICE

Commissioner for Patents
United States Patent and Trademark Office
P.O. Box 1450
Alexandria, VA 22313-1450
www.uspto.gov

PATRICK J. HALLORAN
AVENTIS PASTEUR
KNERR BUILDING
SWIFTWATER, PA 18370

COPY MAILED

DEC 0 5 2006

OFFICE OF PETITIONS

In re Application of :
Veronique Barban et al :
Application No. 10/735,064 : DECISION GRANTING PETITION
Filed: December 12, 2003 : UNDER 37 CFR 1.137(b)
Attorney Docket No. API-02-14-US :

This is a decision on the petition under 37 CFR 1.137(b), filed August 4, 2006 and resubmitted on October 23, 2006, to revive the above-identified application.

The petition is **GRANTED**.

The above-identified application became abandoned for failure to reply in a timely manner to the non-final Office action mailed September 27, 2005, which set a shortened statutory period for reply of three (3) months. No extensions of time under the provisions of 37 CFR 1.136(a) were obtained. Accordingly, the above-identified application became abandoned on December 28, 2005. A Notice of Abandonment was mailed on April 24, 2006.

The petition satisfies the conditions for revival pursuant to the provisions of 37 CFR 1.137(b) in that (1) the reply (an amendment), (2) the $1,500 petition fee, and (3) the required statement of unintentional delay have been received. Accordingly, the reply to the non-final Office action of September 27, 2005 is accepted as having been unintentionally delayed.

The file does not indicate a change of address has been submitted, although the address given on the petition differs from the address of record. If appropriate, a change of address should be filed in accordance with MPEP 601.03. A courtesy copy of this decision is being mailed to the address given on the petition; however, the Office will mail all future correspondence solely to the address of record.

Telephone inquiries concerning this decision should be directed to the undersigned at (571) 272-3218.

This matter is being referred to Technology Center AU 1648 for appropriate action in the normal course of business on the reply received August 4, 2006.

Frances Hicks
Petitions Examiner
Office of Petitions

cc:

Patrick J. Halloran
3141 Muirfield Road
Center Valley, PA 18034

UNITED STATES PATENT AND TRADEMARK OFFICE

UNITED STATES DEPARTMENT OF COMMERCE
United States Patent and Trademark Office
Address: COMMISSIONER FOR PATENTS
P.O. Box 1450
Alexandria, Virginia 22313-1450
www.uspto.gov

APPLICATION NO.	FILING DATE	FIRST NAMED INVENTOR	ATTORNEY DOCKET NO.	CONFIRMATION NO.
10/735,068	12/11/2003	Michael Tyler	4316/055	1263

22440 7590 10/03/2005

GOTTLIEB RACKMAN & REISMAN PC
270 MADISON AVENUE
8TH FLOOR
NEW YORK, NY 100160601

EXAMINER	
KUGEL, TIMOTHY J	

ART UNIT	PAPER NUMBER
1712	

DATE MAILED: 10/03/2005

Please find below and/or attached an Office communication concerning this application or proceeding.

UNITED STATES PATENT and TRADEMARK OFFICE
UNDER SECRETARY OF COMMERCE FOR INTELLECTUAL PROPERTY AND
DIRECTOR OF THE UNITED STATES PATENT AND TRADEMARK OFFICE
WASHINGTON, D.C. 20231
WWW.USPTO.GOV

Mailed:

RPG
Paper No. 9/20/05

In re Application of Tyler et al.
Serial No.: 10/735,068
Filed: December 11, 2003

DECISION ON PETITION UNDER *37 CFR 1.48(a)*

For: COMPOSITION FOR CONDITIONING WATER USED IN AQUARIUMS

This is a decision on the PETITION TO CORRECT INVENTORSHIP, filed July 15, 2005 to correct inventorship under 37 CFR 1.48(a) by adding the name of Ian Cottrell to the list of inventors of the instant application.

It is noted that the applicant has met the requirements of 37 C.F.R. § 1.48(a) by (1) submitting a request to correct the inventorship that sets forth the desired inventorship change; (2) providing a statement from each person being added as an inventor that the error in inventorship occurred without deceptive intention on his or her part; (3) providing a declaration of the actual inventors as required by 37 C.F.R. § 1.63; (4) providing the processing fee set forth in 1.17(i); and, (5) providing the written consent of the assignee.

The request is **GRANTED**.

The application file is being forwarded to the appropriate section of the Patent and Trademark Office for correction of the record.

Randy Gulakowski
Supervisory Patent Examiner
Art Unit 1712
Technology Center 1700

GOTTLIEB RACKMAN & REISMAN PC
270 Madison Avenue
8th Floor
New York, NY 10016-0601

UNITED STATES PATENT AND TRADEMARK OFFICE

Commissioner for Patents
United States Patent and Trademark Office
P.O. Box 1450
Alexandria, VA 22313-1450
www.uspto.gov

Lowell W. Gresham
Meschkow & Gresham, PLC
Suite 409
5727 North Seventh Street
Phoenix AZ 85014

COPY MAILED

FEB 13 2006

OFFICE OF PETITIONS

In re Application of :
OUIMET :
Application No. 10/735,080 : DECISION ON PETITION
Filed: December 12, 2003 : UNDER 37 CFR 1.137(b)
Attorney Docket No. 2297-020 :

This is a decision on the petition, filed November 17, 2005, which is being treated as a petition under 37 CFR 1.137(b) to revive the instant nonprovisional application for failure to timely notify the U.S. Patent and Trademark (USPTO) of the filing of an application in a foreign country, or under a multinational treaty that requires publication of applications eighteen months after filing. *See* 37 CFR 1.137(f).

The petition is **GRANTED**.

Petitioner states that the instant nonprovisional application is the subject of an application filed in an eighteen-month publication country on December 7, 2004. However, the USPTO was unintentionally not notified of this filing within 45 days subsequent to the filing of the subject application in an eighteen-month publication country.

In view of the above, this application became abandoned pursuant to 35 U.S.C. § 122(b)(2)(B)(iii) and 37 CFR 1.213(c) for failure to timely notify the Office of the filing of an application in a foreign country or under a multilateral international agreement that requires publication of applications 18 months after filing.

A petition to revive an application abandoned pursuant to 35 U.S.C. 122(b)(2)(B)(iii) for failure to notify the USPTO of a foreign filing must be accompanied by:

(1) the required reply which is met by the notification of such filing in a foreign country or under a multinational treaty;
(2) the petition fee as set forth in 37 CFR 1.17(m); and
(3) a statement that the entire delay in filing the required reply from the due date of the reply until the filing of a grantable petition was unintentional.

The instant petition has been found to be in compliance with 37 CFR 1.137(b). Accordingly, the failure to timely notify the USPTO of a foreign or international filing within 45 days after the date of filing of

such foreign or international application as provided by 35 U.S.C. § 122(b)(2)(B)(iii) and 37 CFR 1.213(c) is accepted as having been unintentionally delayed.

The previous Request and Certification under 35 U.S.C. § 122(b)(2)(B)(i) has been rescinded. A Notice Regarding Rescission of Nonpublication Request, which sets forth the projected publication date of May 18, 2006, has been mailed under separate cover.

Telephone inquiries concerning this decision should be directed to Denise Pothier at (571) 272-4787.

This application is being forwarded to Technology Center Art Unit 3623 for examination in due course.

Frances Hicks
Petitions Examiner
Office of Petitions

UNITED STATES PATENT AND TRADEMARK OFFICE

UNITED STATES DEPARTMENT OF COMMERCE
United States Patent and Trademark Office
Address: COMMISSIONER FOR PATENTS
P.O. Box 1450
Alexandria, Virginia 22313-1450
www.uspto.gov

APPL NO.	FILING OR 371 (c) DATE	ART UNIT	FIL FEE REC'D	ATTY.DOCKET NO	DRAWINGS	TOT CLMS	IND CLMS
10/735,096	12/12/2003	2126	770	5670-7DV	7	12	3

CONFIRMATION NO. 1585

CORRECTED FILING RECEIPT

Robert W. Glatz, Esq.
Myers Bigel Sibley & Sajovec
Post Office Box 37428
Raleigh, NC 27627

OC000000012411613

Date Mailed: 04/23/2004

Receipt is acknowledged of this regular Patent Application. It will be considered in its order and you will be notified as to the results of the examination. Be sure to provide the U.S. APPLICATION NUMBER, FILING DATE, NAME OF APPLICANT, and TITLE OF INVENTION when inquiring about this application. Fees transmitted by check or draft are subject to collection. Please verify the accuracy of the data presented on this receipt. **If an error is noted on this Filing Receipt, please write to the Office of Initial Patent Examination's Filing Receipt Corrections, facsimile number 703-746-9195. Please provide a copy of this Filing Receipt with the changes noted thereon. If you received a "Notice to File Missing Parts" for this application, please submit any corrections to this Filing Receipt with your reply to the Notice. When the USPTO processes the reply to the Notice, the USPTO will generate another Filing Receipt incorporating the requested corrections (if appropriate).**

Applicant(s)

William Tsun, Cary, NC;
Vikas Chandra, Cary, NC;
John Lee Wood, Raleigh, NC;
Peter James Schwaller, Raleigh, NC;

Domestic Priority data as claimed by applicant

This application is a DIV of 09/234,085 01/19/1999 PAT 6,708,224

Foreign Applications

If Required, Foreign Filing License Granted: 03/22/2004

Projected Publication Date: 07/29/2004

Non-Publication Request: No

Early Publication Request: No

Title

Methods, systems and computer program products for monitoring a task on a computer

Preliminary Class

719

LICENSE FOR FOREIGN FILING UNDER
Title 35, United States Code, Section 184
Title 37, Code of Federal Regulations, 5.11 & 5.15

GRANTED

The applicant has been granted a license under 35 U.S.C. 184, if the phrase "IF REQUIRED, FOREIGN FILING LICENSE GRANTED" followed by a date appears on this form. Such licenses are issued in all applications where the conditions for issuance of a license have been met, regardless of whether or not a license may be required as set forth in 37 CFR 5.15. The scope and limitations of this license are set forth in 37 CFR 5.15(a) unless an earlier license has been issued under 37 CFR 5.15(b). The license is subject to revocation upon written notification. The date indicated is the effective date of the license, unless an earlier license of similar scope has been granted under 37 CFR 5.13 or 5.14.

This license is to be retained by the licensee and may be used at any time on or after the effective date thereof unless it is revoked. This license is automatically transferred to any related applications(s) filed under 37 CFR 1.53(d). This license is not retroactive.

The grant of a license does not in any way lessen the responsibility of a licensee for the security of the subject matter as imposed by any Government contract or the provisions of existing laws relating to espionage and the national security or the export of technical data. Licensees should apprise themselves of current regulations especially with respect to certain countries, of other agencies, particularly the Office of Defense Trade Controls, Department of State (with respect to Arms, Munitions and Implements of War (22 CFR 121-128)); the Office of Export Administration, Department of Commerce (15 CFR 370.10 (j)); the Office of Foreign Assets Control, Department of Treasury (31 CFR Parts 500+) and the Department of Energy.

NOT GRANTED

No license under 35 U.S.C. 184 has been granted at this time, if the phrase "IF REQUIRED, FOREIGN FILING LICENSE GRANTED" DOES NOT appear on this form. Applicant may still petition for a license under 37 CFR 5.12, if a license is desired before the expiration of 6 months from the filing date of the application. If 6 months has lapsed from the filing date of this application and the licensee has not received any indication of a secrecy order under 35 U.S.C. 181, the licensee may foreign file the application pursuant to 37 CFR 5.15(b).

UNITED STATES PATENT AND TRADEMARK OFFICE

Commissioner for Patents
United States Patent and Trademark Office
P.O. Box 1450
Alexandria, VA 22313-1450
www.uspto.gov

IPSG, P.C.
P.O. BOX 700640
SAN JOSE CA 95170-0640

COPY MAILED

JAN 19 2007

OFFICE OF PETITIONS

In re Application of	:	
Kao et al.	:	DECISION ON PETITION
Application No. 10/735,107	:	TO WITHDRAW
Filed: December 12, 2003	:	FROM RECORD
Attorney Docket No. RZMI-P318	:	

This is a decision on the request to withdraw as attorney of record under 37 C.F.R. § 1.36, filed August 1, 2006.

The request is **NOT APPROVED**.

A grantable request to withdraw as attorney of record must be signed by every attorney seeking to withdraw or contain a clear indication that one attorney is signing on behalf of another/others. A request to withdraw will not be approved unless at least 30 (thirty) days would remain between the date of approval and the later of the expiration date of a time to file a response or the expiration date of the maximum time period which can be extended under 37 C.F.R. § 1.136(a).

The Office cannot approve the request at this time since the reason provided do not meet any of the conditions under the mandatory or permissive categories enumerated in 37 CFR 10.40. Section 10.40 of Title 37 of the Code of Federal Regulation states, "[a] practitioner shall not withdraw from employment in a proceeding before the Office without permission from the Office[.]" More specifically, 37 CFR 10.40 states, "[i]f paragraph (b) of this section is not applicable, a practitioner may not request permission to withdraw in matter pending before the Office unless such request or such withdrawal is" for one the permissive reasons listed in 37 CFR 10.40(c). The reasons set forth in the request, "The Assignee Raza Microelectronics, Inc. wishes to terminate representation," does not meet any the conditions set forth in 37 CFR 10.40 since a proper Statement under 37 CFR 3.73(b) has not be submitted.

For the same reason listed above, the Revocation of Power of Attorney submitted by the Assignee on December 5, 2006 is hereby not approved. 37 CFR 3.73(b) provides that: (1) when an assignee seeks to take action in a matter before the Office, the assignee must establish its ownership of the property to the satisfaction of the Commissioner; (2) ownership is established by submitting to the Office, in the Office file related to the matter in which action is sought to be taken, documentary evidence of a chain of title from the original owner to the assignee (*e.g.*, copy of an executed assignment submitted for recording) or by specifying (*e.g.*, reel and frame number) where such evidence is recorded in the Office; (3) the submission establishing ownership must be signed by a party authorized to act on behalf of the assignee; and (4) documents submitted to establish ownership may be required to be recorded as a condition to permitting the assignee to take action in a matter pending before the Office.

All future communications from the Office will continue to be directed to the above-listed address until otherwise notified by applicant.

Telephone inquires concerning this decision should be directed to the undersigned at 571-272-3206.

Liana Walsh
Petitions Examiner
Office of Petitions

Cc:

RAZA MICROELECTRONICS, INC.
LEGAL DEPARTMENT
18920 FORGE DRIVE
CUPERTINO, CA 95014-0701

STEVENS LAW GROUP P.C.
P. O. BOX 1667
SAN JOSE, CA 95107

UNITED STATES PATENT AND TRADEMARK OFFICE

Commissioner for Patents
United States Patent and Trademark Office
P.O. Box 1450
Alexandria, VA 22313-1450
www.uspto.gov

Steven C. Bauman
HENKEL CORPORATION
1001 Trout Brook Crossing
Legal Department
Rocky Hill CT 06067

COPY MAILED

JUL 3 1 2008

OFFICE OF PETITIONS

In re Application of
Dershem, et al.
Application No. 10/735,119
Filed: December 11, 2003
Attorney Docket No. QUANT1350-1 (028248-2302)
For: BENZOXAZINES, THERMOSETTING RESINS COMPRISED THEREOF, AND METHODS FOR USE THEREOF

ON PETITION

This is a decision on the petition under 37 CFR 1.181, filed November 6, 2007, requesting that the Office withdraw the holding of abandonment of the above-identified application. In the alternative, petitioners request revival of the application under the unintentional delay provisions of 37 CFR 1.137(b).

The petition under 37 CFR 1.181 is **GRANTED**.

The petition under 37 CFR 1.137(b) is **DISMISSED AS MOOT**.

This application was held abandoned for failure to respond in a timely manner to the non-final Office action, mailed April 3, 2007, which set forth an extendable three (3) month period for reply. The Office contended that this application became abandoned on July 4, 2007 for failure to reply to the April 3, 2007 non-final Office action. A Notice of Abandonment was mailed on October 31, 2007.

It is noted that the only ground of rejection discussed in the April 3, 2007 non-final Office action was nonstatutory obviousness-type double patenting.

Petitioners request withdrawal of the holding of abandonment based on the assertion that a proper reply, in the form of a terminal disclaimer, was timely received in the Office on May 29, 2007. The undersigned finds this argument completely convincing, as the terminal disclaimer is

present in the application file and Office financial records shows that the terminal disclaimer fee was charged on May 29, 2007. The terminal disclaimer was timely filed.

The petition under 37 CFR 1.181 is **granted**, the holding of abandonment is withdrawn, and the October 31, 2007 Notice of Abandonment is **vacated**. No petition fee has been or will be charged in connection with this matter.

The petition under 37 CFR 1.137(b) is **dismissed as moot**. The $1,540.00 petition fee will be refunded to deposit account no.

Accordingly, the application file will be forwarded to Technology Center A.U. 1796 for consideration of the terminal disclaimer filed on May 29, 2007 and the supplemental amendment filed on November 6, 2007.

Telephone inquiries pertaining to this matter may be directed to the undersigned at (571) 272-3230.

Shirene Willis Brantley

Shirene Willis Brantley
Senior Petitions Attorney
Office of Petitions
Office of the Deputy Commissioner
for Patent Examination Policy

UNITED STATES PATENT AND TRADEMARK OFFICE

Commissioner for Patents
United States Patent and Trademark Office
P.O. Box 1450
Alexandria, VA 22313-1450
www.uspto.gov

M

Morrison & Foerster LLP
425 Market Street
San Francisco, CA 94105-2482

COPY MAILED

AUG 0 3 2007

OFFICE OF PETITIONS

In re Application of	:	
Igor Keller et al.	:	
Application No. 10/735,123	:	DECISION ON PETITION
Filed: December 12, 2003	:	TO WITHDRAW
Attorney Docket No. 188122000400	:	FROM RECORD
	:	

This is a decision on the Request to Withdraw as attorney or agent of record under 37 C.F.R. § 1.36(b), filed March 14, 2007.

The request is **NOT APPROVED** as moot.

A review of the file record indicates that the power of attorney to Morrison & Foerster LLP has been revoked by the assignee of the patent application on April 18, 2007. Accordingly, the request to withdraw under 37 C.F.R. § 1.36(b) is moot.

All future communications from the Office will continue to be directed to the below-listed address until otherwise notified by applicant.

Telephone inquires concerning this decision should be directed to Terri Williams at 571-272-2991.

Terri Williams
Petitions Examiner
Office of Petitions

cc: **San Francisco Office of**
Novak, Druce & Quigg LLP
1000 Louisiana Street
Fifty-Third Floor
Houston, TX 77002

UNITED STATES PATENT AND TRADEMARK OFFICE

Commissioner for Patents
United States Patent and Trademark Office
P.O. Box 1450
Alexandria, VA 22313-1450
www.uspto.gov

James M. Harrington
Hearst Tower, 47th Floor
214 North Tryon Street
Charlotte, NC 28202

MAILED

JUN 18 2004

Director's Office
Group 3700

In re application of
Dwight Myers

Serial Number: 10/735136
Filed: December 12, 2003

DECISION ON PETITION TO MAKE SPECIAL UNDER 37 CFR. 1.102(c)

For: **EASY ACCESS COMMODE SEAT**

This is a decision on the petition filed on December 12, 2003, under 37 CFR. 1.102(c) to make special the above identified application because of the age/health of the applicant. Since the requirements of the M.P.E.P Section 708.02 IV have been met, the petition will be GRANTED.

The examiner is directed (1) to make an interference search for possible interfering applications, (2) to promptly examine this application out of turn, and (3) if any interfering application is discovered, to examine such application simultaneously and state in the first official letter of such application that it is being taken out of turn because of a possible interference.

Petitioner is advised that this application will continue to be special, throughout its entire prosecution and pendency, including interference or appeal, if any, only is Petitioner makes a prompt bona-fide effort, in response to each Office action, to place the application in condition for allowance, even if it is necessary to conduct an interview with the Examiner to accomplish this purpose.

Summary: Decision on Petition **GRANTED**.

/Richard A. Bertsch/

Richard A. Bertsch
Director
Technology Center 3700
(703) 308-0975

rt: 6/16/04

IN THE UNITED STATES PATENT AND TRADEMARK OFFICE

In re U.S. Patent Application of:	)	
Dwight MYERS	)	Attorney Docket No.: 0027966.00002
Serial No.: To Be Assigned	)	
Filed: Concurrently Herewith	)	
For: EASY ACCESS	)	
COMMODE SEAT	)	

December 12, 2003

Commissioner for Patents
P.O. Box 1450
Alexandria, VA 22313-1450

PETITION TO MAKE SPECIAL UNDER 37 C.F.R. § 1.102(c)

Sir:

The Applicant hereby petitions that the above-captioned application, filed concurrently herewith, be designated a "special application" within the meaning that term is given under 37 C.F.R. § 1.102(c), and advanced out of turn for examination.

The Applicant states as the basis for this Petition that the Applicant has attained the age of at least 65 years; to wit, the Applicant was born on April 15, 1930, and on the date of the application is 73 years old. In support of this Petition, the Applicant has attached hereto a photocopy of his birth certificate.

Under 37 C.F.R. § 1.102(c), this petition may be filed without a fee. If a fee is deemed to be required, the Commissioner is authorized to debit Deposit Account No. 18-1215.

Respectfully submitted,

James M. Harrington
Reg. No. 47,632
Attorney for Applicant

UNITED STATES PATENT AND TRADEMARK OFFICE

Commissioner for Patents
United States Patent and Trademark Office
P.O. Box 1450
Alexandria, VA 22313-1450
www.uspto.gov

Patent No. : 7,451,908
Ser. No. : 10/735,177
Inventor(s) : Francesco Gropallo
Issued : November 18, 2008
Title : FURNACE BRAZING PROCESS
Docket No. : 206,383

Re: Request for Certificate of Correction

Consideration has been given your request for the issuance of a certificate of correction for the above-identified patent under the provisions of Rule(s) 1.322.

Assignees' names and addresses (assignment data) printed in a patent, are based *solely* on information supplied in the appropriate space for identifying the assignment data, i.e., item 3 of the Issue Fee Transmittal Form PTOL-85B. Granting of a request under 37 CFR 3.81(b) is required to correct applicant's error providing ***incorrect or erroneous*** assignment data, *before* issuance of a Certificate of Correction, under 37 CFR 1.323 *(see Manual of Patent Examining Procedures (M.P.E.P) Chp.1400, sect. 1481).* This procedure is required *at any time after the issue fee is paid*, including after issuance of the patent.

In view of the foregoing, your request is hereby denied.

A request to correct the Assignee under 37 CFR 3.81(b) should include:

A. **the processing fee set forth in 37 CFR 1.117(h) (currently $130);**
B. a statement that the failure to include the correct assignee name on the PTOL-85B was inadvertent; and
C. a copy of the Notice of Recordation of Assignment Document, reflecting the reel and frame number where the assignment(s) is recorded and/or reflecting proof of *the date* the assignment was submitted for recordation.

In the Request, Applicant(s) may request that the file be forwarded to Certificates of Correction Branch, for issuance of a Certificate of Correction, if the Request is granted.

Any request under 37 CFR 3.81(b) should be directed to the following address or facsimile number:

By mail: Mail Stop PETITIONS
Commissioner for Patents
Post Office Box 1450
Alexandria, VA 22313-1450

By hand: Customer Service Window
Mail Stop Petitions
Randolph Building
401 Dulany Street
Alexandria, VA 22314

By fax: (703) 872-9306
ATTN: Office of Petitions

If a fee (currently $100) was previously submitted for consideration of a Request for Certificate of Correction, under CFR 1.323, to correct assignment data, , no additional fee is required.

Eva James
For Mary Diggs
Decisions & Certificates
of Correction Branch
(703) **308-9390 ext. 124** or 125

Thomas E. Spath
Abelman, Frayne & Schwab
New York, NY 10017-5621

UNITED STATES PATENT AND TRADEMARK OFFICE

Commissioner for Patents
United States Patent and Trademark Office
P.O. Box 1450
Alexandria, VA 22313-1450
www.uspto.gov

DARBY & DARBY P.C.
P.O. BOX 770
CHURCH STREET STATION
NEW YORK NY 10008-0770

COPY MAILED

MAY 06 2009

OFFICE OF PETITIONS

In re Patent No. 7,493,744 :
Application No. 10/735,181 :
Filed: December 12, 2003 : ON PETITION
Issued: February 24, 2009 :
Attorney Docket No. 00597/0200639-US0 :

This is a decision on the petition filed March 10, 2009, which is being treated as a request under 37 CFR 3.81(b)[1] to add the name and address of the third assignee on the front page of the above-identified patent by way of a Certificate of Correction.

The request is **GRANTED**.

This matter is being referred to the Certificates of Correction Branch for issuance of the requested Certificate of Correction.

Telephone inquiries concerning this decision may be directed to the undersigned at (571) 272-3206. Inquiries regarding the issuance of a certificate of correction should be directed to the Certificate of Correction Branch at (571) 272-4200.

Liana Walsh
Petitions Examiner
Office of Petitions

[1] *See* MPEP 1309, subsection II; and Official Gazette of June 22, 2004.

UNITED STATES PATENT AND TRADEMARK OFFICE

Commissioner for Patents
United States Patent and Trademark Office
P.O. Box 1450
Alexandria, VA 22313-1450
www.uspto.gov

CHA & REITER, LLC
210 ROUTE 4 EAST STE 103
PARAMUS NJ 07652

COPY MAILED

JUL 1 0 2007

OFFICE OF PETITIONS

In re Application of	:	
Cho et al.	:	
Application No. 10/735,192	:	DECISION ON PETITION
Filed: December 12, 2003	:	
Attorney Docket No. 5000-1-501	:	

This is a decision on the petition, filed May 29, 2007, which is being treated as a petition under 37 CFR 1.181 (no fee) requesting withdrawal of the holding of abandonment in the above-identified application.

The petition is **GRANTED**.

This application was held abandoned for failure to reply to the non-final Office action mailed September 22, 2006, which set a three (3) month shortened statutory period for reply. A reply was due on or before December 22, 2006.

Petitioner asserts that the Office action dated September 22, 2006 was not received.

A review of the written record indicates no irregularity in the mailing of the Office action, and, in the absence of any irregularity, there is a strong presumption that the Office action was properly mailed to the practitioner at the address of record. This presumption may be overcome by a showing that the Office action was not in fact received. In this regard, the showing required to establish the failure to receive the Office action must consist of the following:

1. a statement from practitioner stating that the Office action was not received by the practitioner;

2. a statement from the practitioner attesting to the fact that a search of the file jacket and docket records indicates that the Office action was not received; and

3. a copy of the docket record where the non-received Office action would have been entered had it been received must be attached to and referenced in the practitioner's statement.

See MPEP § 711.03(c) under subheading "Petition to Withdraw Holding of Abandonment Based on Failure to Receive Office Action," and "Withdrawing the Holding of Abandonment When Office Actions Are Not Received," 1156 Official Gazette 53 (November 16, 1993).

The petition satisfies the above-stated requirements. Accordingly, the application was not abandoned in fact.

In view of the above, the holding of abandonment is withdrawn.

This application is being referred to the Technology Center technical support staff of Art Unit 1756 for re-mailing the Office action of September 22, 2006. The period for reply will run from the mailing date of the Office action.

Liana Walsh
Petitions Examiner
Office of Petitions

UNITED STATES PATENT AND TRADEMARK OFFICE

COMMISSIONER FOR PATENTS
UNITED STATES PATENT AND TRADEMARK OFFICE
P.O. BOX 1450
ALEXANDRIA, VA 22313-1450
www.uspto.gov

IBM CORPORATION
C/O DARCELL WALKER, ATTORNEY AT LAW
P. O. Box 25048
HOUSTON TX 77265

COPY MAILED

NOV 10 2008

In re Application of
Yellepeddy, et al.
Application No. 10/735,207
Filed: December 12, 2003
Attorney Docket No. AUS920010442US2

ON PETITION

This is a decision on the petition under the unintentional provisions of 37 CFR 1.137(b), filed October 16, 2008, to revive the above-identified application.

The petition is **GRANTED**.

The application became abandoned May 12, 2008 for failure to timely file a reply within the meaning of 37 CFR 1.113 to the final Office action mailed February 11, 2008. The proposed reply required for consideration of a petition to revive must be a Notice of Appeal (and appeal fee required by 37 CFR 41.20(b)(2), an amendment that *prima facie* places the application in condition for allowance, a Request for Continued Examination and submission (37 CFR 1.114), or the filing of a continuing application under 37 CFR 1.53(b). See MPEP 711.03(c)(III)(A)(2). No extensions of time pursuant to the provisions of 37 CFR 1.136(a) were obtained. Notice of Abandonment September 11, 2008.

The petition satisfies the requirements of 37 CFR 1.137(b) in that petitioner has supplied (1) the reply in the form of a Request for Continued Examination (RCE) and fee, and the submission required by 37 CFR 1.114; (2) the required petition fee; and (3) a proper statement of unintentional delay.

Telephone inquiries concerning this decision should be directed to the undersigned at (571) 272-3205.

This application is being referred to Technology Center AU 3628 for processing of the RCE and for appropriate action by the Examiner in the normal course of business on the amendment submitted in accordance with 37 CFR 1.114.

Alesia M. Brown
Petitions Attorney
Office of Petitions

UNITED STATES PATENT AND TRADEMARK OFFICE

Commissioner for Patents
United States Patent and Trademark Office
P.O. Box 1450
Alexandria, VA 22313-1450
www.uspto.gov

Paper No.

NAVAL RESEARCH LABORATORY
ASSOCIATE COUNSEL (PATENTS)
CODE 1008.2
4555 OVERLOOK AVENUE, S.W.
WASHINGTON DC 20375-5320

COPY MAILED

DEC 10 2007

OFFICE OF PETITIONS

In re Application of	:	
Pollack et al.	:	DECISION ON
Application No. 10/735,208	:	PETITION
Filed: December 15, 2003	:	
Atty Docket No. 84693-US1	:	

This is a decision on the petition under 37 CFR 1.137(b), filed October 4, 2006. This petition was recently forwarded to the undersigned for consideration.

The petition is **GRANTED**.

The above-identified application became abandoned for failure to pay the Issue Fee and Publication Fee within three months of the mailing date, May 25, 2006, of the Notice of Allowance and Fee(s) Due. This Office action set a three-month nonextendable statutory period for reply. No reply having been received, the above-identified application became abandoned on August 26, 2006. A courtesy Notice of Abandonment was mailed on October 3, 2006.

The petition included the required reply in the form of payment of the Issue Fee and Publication Fee; payment of the petition fee set forth in 37 CFR § 1.17(m); and the required statement of unintentional delay. No terminal disclaimer is required.

Applicants also submitted drawings in response to the changes set forth in the Notice of Allowability.

The Office of Patent Publication has been advised of this decision. The application is thereby forwarded for processing into a patent.

Telephone inquiries related to this decision should be directed to the undersigned at (571) 272-3219.

Nancy Johnson
Senior Petitions Attorney
Office of Petitions

10/735221

SPE RESPONSE FOR CERTIFICATE OF CORRECTION

Paper No.: _____

DATE : 2/7/2006

TO SPE OF : ART UNIT 2800 (2815)

SUBJECT : Request for Certificate of Correction on Patent No.: 6,919,623

A response is requested with respect to the accompanying request for a certificate of correction.

Please complete this form and return with file, within **7** days to:
Certificates of Correction Branch - PK 3-922
Palm location **7580** - Tel. No. 305-8309

With respect to the change(s) requested, correcting Office and/or Applicant's errors, should the patent read as shown in the certificate of correction? No new matter should be introduced, nor should the scope or meaning of the claims be changed.

Okay to enter data to claim 31 as requested in C of C?

Ernest C. White, LIE305-8339
Certificates of Correction Branch

Thank You For Your Assistance

The request for issuing the above-identified correction(s) is hereby:
Note your decision on the appropriate box.

- ☑ **Approved** — All changes apply.
- ☐ **Approved in Part** — Specify below which changes **do not** apply.
- ☐ **Denied** — State the reasons for denial below.

Comments:

_____

_____

_____

_____

_____

2815

SPE **Art Unit**

UNITED STATES PATENT AND TRADEMARK OFFICE

COMMISSIONER FOR PATENTS
UNITED STATES PATENT AND TRADEMARK OFFICE
P.O. BOX 1450
ALEXANDRIA, VA 22313-1450
www.uspto.gov

Arnold S. Weintraub
THE WEINTRAUB GROUP, PLC
Suite 240
32000 Northwester Highway
Farmington Hills MI 48334

COPY MAILED

SEP 0 6 2005

OFFICE OF PETITIONS

In re Application of :
Gehrig et al. :
Application No. 10/735,233 : DECISION ON PETITION
Filed: December 12, 2003 :
Attorney Docket No. CAB-129-A :

This is a decision on the petition under 37 CFR 1.137(a), which is being treated as a petition under 37 CFR 1.137(b), filed August 11, 2005, to revive the above-identified application.[1]

This application became abandoned for failure to respond timely to the Notice to File Missing Parts of Nonprovisional Application ("Notice") mailed on April 27, 2004, which set a two-month extendable period to reply. Petitioner did not obtain any extensions of time to respond to the Notice. Accordingly, this application became abandoned on June 28, 2004. A Notice of Abandonment was mailed on January 6, 2005.

The statement of unintentional delay presented in the petition does not comply with the current rule. 37 CFR 1.137(b)(3) requires petitioner to submit a statement that "the entire delay in filing the required reply from the due date for the reply until the filing of a grantable petition pursuant to this paragraph was unintentional." However, the statement presented will be accepted and construed as the statement required by 37 CFR 1.137(b)(3). Petitioner must notify the Office if this is not a correct interpretation of the statement contained in the present petition.

With the present petition, petitioner authorized the Office to charge any additional fees. In accordance with petitioner's authorization, Deposit Account No. 50-2815 will be charged the $65.00 surcharge for the late filing of the declaration and the $130.00 surcharge for filing a Non-English specification as required by the Notice of April 27, 2004.

As petitioner has met the requirements of 37 CFR 1.137(b), the petition is **granted.**

---

[1]The Office notes that the petition is entitled "Petition to Revive an Abandoned Patent Application under 37 CFR 1.137(a)." However, in a paper styled "Communication," petitioner stated that the application was "unintentional" abandoned. Moreover, petitioner paid the $750.00 petition fee to revive an unintentionally abandoned application.

This matter is being referred to the Office of Initial Patent Examination for further processing.

Telephone inquiries concerning this matter may be directed to the undersigned at (571) 272-3211.

Christina Tartera Donnell

Christina Tartera Donnell
Senior Petitions Attorney
Office of Petitions

UNITED STATES PATENT AND TRADEMARK OFFICE

Commissioner for Patents
United States Patent and Trademark Office
P.O. Box 1450
Alexandria, VA 22313-1450
www.uspto.gov

J C PATENTS, INC.
4 VENTURE, SUITE 250
IRVINE CA 92618

COPY MAILED

FEB 0 7 2007

OFFICE OF PETITIONS

In re Application of :
Yang et al. :
Application No. 10/735,252 : ON PETITION
Filed: December 12, 2003 :
Attorney Docket No. JCLA10634 :

This is a decision on the petition under 37 C.F.R. § 1.137(b), filed January 25, 2006, to revive the above-identified application. The Office regrets the delay in acting on the instant petition.

The petition is **GRANTED.**

The petition satisfies the conditions for revival pursuant to the provisions of 37 CFR 1.137(b) in that (1) the reply in the form of the Issue Fee Transmittal with payment of the issue and publication fees; (2) the petition fee; and (3) the required statement of unintentional delay have been received. Accordingly, the response has been accepted as having been unintentionally delayed.

This matter is being referred to the Publishing Division for processing into a patent.

Telephone inquiries regarding this decision should be directed to the undersigned at (571) 272-3206.

Liana Walsh
Petitions Examiner
Office of Petitions

UNITED STATES PATENT AND TRADEMARK OFFICE

Commissioner for Patents
United States Patent and Trademark Office
P. O. Box 1450
Alexandria, VA 22313-1450
www.uspto.gov

J C PATENTS, INC.
4 VENTURE, SUITE 250
IRVINE, CA 92618

COPY MAILED

FEB 2 2 2008

OFFICE OF PETITIONS

In re Patent No. 7,211,640 :
Issue Date: May 1, 2007 :
Application No. 10/735,252 : ON PETITION
Filed: December 12, 2003 :
Attorney Docket No. JCLA10634 :

This is a decision on the petition filed August 15, 2007, which is being treated as a petition under 37 CFR 3.81(b)[1] to correct the assignee's name on the front page of the above-identified patent by way of a Certificate of Correction.

The petition is **granted.**

Telephone inquiries concerning this matter may be directed to the undersigned at (571) 272-3210. Any questions concerning the issuance of the Certificate of Correction should be directed to the Certificates of Correction Branch at (703) 305-8309.

This application is being forwarded to the Certificates of Correction Branch for issuance of the requested Certificate of Correction.

Irvin Dingle
Petitions Examiner
Office of Petitions

[1] See Official Gazette of June 22, 2004

UNITED STATES PATENT AND TRADEMARK OFFICE

Commissioner for Patents
United States Patent and Trademark Office
P.O. Box 1450
Alexandria, VA 22313-1450
www.uspto.gov

SCHEEF & STONE
SUITE 1400
5956 SHERRY LANE
DALLAS, TX 75225

COPY MAILED

SEP 2 2 2005

OFFICE OF PETITIONS

In re Application of :
Liangchi Hsu et al :
Application No. 10/735,266 : ON PETITION
Filed: December 12, 2003 :
Attorney Docket No. NC25975 9021.173 :

This is a decision on the petition under 37 CFR 1.137(b), filed August 22, 2005, to revive the above-identified application.

The petition is **GRANTED**.

The above-identified application became abandoned for failure to submit the issue fee/publication fee in a timely manner in reply to the Notice of Allowance mailed April 21, 2005, which set a statutory period for reply of three (3) months. Accordingly, the above-identified application became abandoned on July 22, 2005.

The statement of unintentional delay presented in the petition does not comply with the current rule. Effective December 1, 1997, 37 C.F.R. §1.137 (b)(3) requires a statement that "the entire delay in filing the required reply from the due date for the reply until the filing of a grantable petition pursuant to 37 C.F.R. §1.137(b) was unintentional" be submitted. However, the statement presented will be accepted and construed as meaning that "the entire delay in filing the required reply from the due date for the reply until the filing of a grantable petition pursuant to 37 C.F.R. §1.137(b) was unintentional." If this is an incorrect interpretation in view of the rules, petitioner is required to provide a statement to that effect.

Pursuant to petitioner's authorization, Deposit Account No. 50-2032 was charged a total of $3,200.00 -- $1,500.00 for the petition to revive an unintentionally abandoned application, $1,400.00 for the issue fee, and $400 for the publication fee.

Telephone inquiries concerning this decision should be directed to Wan Laymon at (571) 272-3220.

This matter is being referred to Publishing Division.

Wan Laymon
Petitions Examiner
Office of Petitions
Office of the Deputy Commissioner
for Patent Examination Policy

UNITED STATES PATENT AND TRADEMARK OFFICE

UNITED STATES DEPARTMENT OF COMMERCE
United States Patent and Trademark Office
Address: COMMISSIONER FOR PATENTS
P.O. Box 1450
Alexandria, Virginia 22313-1450
www.uspto.gov

Continental Automotives Systems, Inc.
Patents & Licenses
21440 WEST LAKE COOK ROAD
Floor 7
DEER PARK, IL 60010

Mail Date: 04/21/2010

Applicant	: James B. Piket	: DECISION ON REQUEST FOR
Patent Number	: 7599483	: RECALCULATION of PATENT
Issue Date	: 10/06/2009	: TERM ADJUSTMENT IN VIEW
Appliction No	: 10/735,272	: OF WYETH AND NOTICE OF INTENT TO
Filed	: 12/12/2003	: ISSUE CERTIFICATE OF CORRECTION
		:

The Request for Recalculation is **GRANTED** to the extent indicated.

The patent term adjustment has been determined to be **1052** days. The USPTO will *sua sponte* issue a certificate of correction reflecting the amount of PTA days determined by the recalculation.

Prior to the issuance of the certificate of correction, the USPTO will afford patentee an opportunity to be heard and request reconsideration. Accordingly, patentee has **one month or thirty (30) days**, whichever is longer, to file a request for reconsideration of this patent term adjustment calculation. See 35 U.S.C. 154(b)(3)(B)(ii) and 37 CFR 1.322(a)(4). No extensions of time will be granted under 37 CFR 1.136.

Patentee should use document code PET.OP if electronically filing a request for reconsideration of this patent term adjustment calculation. The patentee must also include the information required by 37 CFR 1.705(b)(2) and the fee required by 37 CFR 1.18(e). If patentee does not file a timely request for reconsideration of this patent term adjustment calculation including the information required by 37 CFR 1.705(b)(2) and the fee required by 37 CFR 1.18(e), the USPTO will issue a certificate of correction reflecting the PTA determination noted above.

Patentee should be aware that in order to preserve the right to review in the United States District Court for the District of Columbia of the USPTO patent term adjustment determination, patentee must ensure that he or she also take the steps required under 35 U.S.C. 154(b)(4)(A) in a timely manner. Nothing in the request for recalculation should be construed as providing an alternative time frame for commencing a civil action under 35 U.S.C. 154(b)(4)(A).

Any questions concerning this decision should be directed to the Office of Patent Legal Administration at 571-272-7702.

UNITED STATES PATENT AND TRADEMARK OFFICE

Commissioner for Patents
United States Patent and Trademark Office
P.O. Box 1450
Alexandria, VA 22313-1450
www.uspto.gov

ERIC B. MEYERTONS
MEYERTONS, HOOD, KIVLIN,
KOWERT & GOETZEL, P.C.
P.O. BOX 398
AUSTIN TX 78767-0398

COPY MAILED

NOV 2 1 2006

OFFICE OF PETITIONS

In re Application of :
Gilles Houle, et al. :
Application No. 10/735,280 : DECISION ON PETITION
Filed: December 12, 2003 : TO MAKE SPECIAL UNDER
Attorney Docket No. 5053-00508 : 37 CFR 1.102(c)(1)
:

This is a decision on the petition under 37 CFR 1.102(c)(1), filed November 13, 2006, to make the above-identified application special based on applicant's age as set forth in M.P.E.P. § 708.02, Section IV.

The petition is **GRANTED**.

A grantable petition to make an application special under 37 CFR 1.102(c)(1) and MPEP § 708.02, Section IV: Applicant's Age must be accompanied by evidence showing that at least one of the applicants is 65 years of age, or more, such as a birth certificate or a statement by applicant. No fee is required

The instant petition includes a declaration statement by applicant James G. Mason. Accordingly, the above-identified application has been accorded "special" status.

Telephone inquiries concerning this decision should be directed to April Wise at 571-272-1642.

All other inquiries concerning either the examination or status of the application should be directed to the Technology Center.

The application is being forwarded to the Technology Center Art Unit 2625 for action on the merits commensurate with this decision.

April M. Wise
Petitions Examiner
Office of Petitions

UNITED STATES PATENT AND TRADEMARK OFFICE

Commissioner for Patents
United States Patent and Trademark Office
P.O. Box 1450
Alexandria, VA 22313-1450
www.uspto.gov

JOHN P. O'BANION
O'BANION & RITCHEY LLP
400 CAPITOL MALL SUITE 1550
SACRAMENTO CA 95814

MAILED

JUL 14 2009

OFFICE OF PETITIONS

In re Application of :
Gardner et al. :
Application No. 10/735,283 : ON PETITION
Filed: December 12, 2003 :
For: Systems, Devices and Methods For :
Opening A Bottle Sealed with A Stopper and
For Sealing A Bottle

This is a decision on the petition under the unintentional provisions of 37 CFR 1.137(b), filed June 8, 2009, to revive the above-identified application.

The petition is **DISMISSED**.

Any request for reconsideration of this decision must be submitted within TWO (2) MONTHS from the mail date of this decision. Extensions of time under 37 CFR 1.136(a) are permitted. The reconsideration request should include a cover letter entitled "Renewed Petition under 37 CFR 1.137(b)." This is **not** a final agency action within the meaning of 5 U.S.C. § 704.

The petition has **not** been reviewed on the merits because the petition has not been properly signed.

In this regard, petitioner's attention is directed to 37 CFR 1.33(b), which states.

> (b) Amendments and other papers. Amendments and other papers, except for written assertions pursuant to § 1.27(c)(2)(ii) of this part, filed in the application must be signed by:
> (1) A registered patent attorney or patent agent of record appointed in compliance with § 1.32(b);
> (2) A registered patent attorney or patent agent not of record who acts in a representative capacity under the provisions of § 1.34;
> (3) An assignee as provided for under §3.71(b) of this chapter; or
> (4) All of the applicants (§ 1.41(b)) for patent, unless there is an assignee of the entire interest and such assignee has taken action in the application in accordance with § 3.71 of this chapter.

Applicant Gardner is the only person who has signed the petition. The petition has not been signed by all of the applicants. To the extent applicant Gardner purports to be the assignee of this application the requirements of 37 CFR 3.71 and 3.73(b) have not been met.

When an assignee files a continuation or divisional application under 37 CFR 1.53, other than a continued prosecution application (CPA) under 37 CFR 1.53(d), the application papers must: (A) refer to a statement filed under 37 CFR 3.73(b) in the parent application; (B) contain a copy of a statement filed under 37 CFR 3.73(b) in the parent application; or (C) contain a newly executed statement under 37 CFR 3.73(b).

The address given on the petition differs from the address of record. If appropriate, a change of address should be filed in accordance with MPEP 601.03. A courtesy copy of this decision is being mailed to the address given on the petition; however, the Office will mail all future correspondence solely to the address of record.

Further correspondence with respect to this matter should be addressed as follows:

By mail: Mail Stop Petition
Commissioner for Patents
P.O. Box 1450
Alexandria, VA 22313-1450

By FAX: (571) 273-8300
Attn: Office of Petitions

By hand: Customer Service Window
Randolph Building
401 Dulany Street
Alexandria, VA 22314

Telephone inquiries related to this decision may be directed to the undersigned at (571) 272-3215.

Charlema Grant
Petitions Attorney
Office of Petitions

Cc: William A. Gardner
P.O. Box 3566
Yountville, CA 94599

UNITED STATES PATENT AND TRADEMARK OFFICE

Commissioner for Patents
United States Patent and Trademark Office
P.O. Box 1450
Alexandria, VA 22313-1450
www.uspto.gov

JOHN P. O'BANION
O'BANION & RITCHEY LLP
400 CAPITOL MALL SUITE 1550
SACRAMENTO CA 95814

COPY MAILED

NOV 09 2009

OFFICE OF PETITIONS

In re Application of :
Gardner et al. :
Application No. 10/735,283 : DECISION ON PETITION
Filed: December 12, 2003 :
Attorney Docket No. :
GAR1756.17A6

This is a decision on the petition under the unintentional provisions of 37 CFR 1.137(b), filed September 14, 2009, to revive the above-identified application.

The petition is **DISMISSED.**

Any request for reconsideration of this decision must be submitted within TWO (2) MONTHS from the mail date of this decision. Extensions of time under 37 CFR 1.136(a) are permitted. The reconsideration request should include a cover letter entitled "Renewed Petition under 37 CFR 1.137(b)." This is **not** a final agency action within the meaning of 5 U.S.C. § 704.

This above-identified application became abandoned for failure to timely file a reply to a non-final Office Action mailed September 8, 2005. The non-final Office Action set a three (3) month shortened statutory period for reply. No extensions of time were obtained under the provisions of 37 CFR 1.136(a). Accordingly, this application became abandoned on December 9, 2005. A Notice of Abandonment was mailed on April 7, 2006.

A grantable petition under 37 CFR 1.137(b) must be accompanied by: (1) the required reply, unless previously filed; (2) the petition fee as set forth in 37 CFR 1.17(m); (3) a statement that the entire delay in filing the required reply from the due date for the reply until the filing of a grantable petition pursuant to 37 CFR 1.137(b) was unintentional; and (4) any terminal disclaimer (and fee as set forth in 37 CFR 1.20(d)) required by 37 CFR 1.137(d). Where there is a question as to whether either

the abandonment or the delay in filing a petition under 37 CFR 1.137 was unintentional, the Director may require additional information. *See* MPEP 711.03(c)(II)(C) and (D). The instant petition lacks item (3).

There are three periods to be considered during the evaluation of a petition under 37 CFR 1.137(b):

(1) the delay in reply that originally resulted in the abandonment;

(2) the delay in filing an initial petition pursuant to 37 CFR 1.137(b) to revive the application; and

(3) the delay in filing a grantable petition pursuant to 37 CFR 1.137(b) to revive the application.

Currently, the delay has not been shown to the satisfaction of the Director to be unintentional for periods (1) and (2).

As to Period (1):

The patent statute at 35 U.S.C. § 41(a)(7) authorizes the Director to revive an "unintentionally abandoned application." The legislative history of Public Law 97-247 reveals that the purpose of 35 U.S.C. § 41(a)(7) is to permit the Office to have more discretion than in 35 U.S.C. §§ 133 or 151 to revive abandoned applications in appropriate circumstances, but places a limit on this discretion, stating that "[u]nder this section a petition accompanied by either a fee of $500 or a fee of $50 **would not be granted where the abandonment** or the failure to pay the fee for issuing the patent **was intentional** as opposed to being unintentional or unavoidable." [emphasis added]. See H.R. Rep. No. 542, 97th Cong., 2d Sess. 6-7 (1982), *reprinted in* 1982 U.S.C.C.A.N. 770-71. The revival of an intentionally abandoned application is antithetical to the meaning and intent of the statute and regulation.

35 U.S.C. § 41(a)(7) authorizes the Director to accept a petition "for the revival of an unintentionally abandoned application for a patent." As amended December 1, 1997, 37 CFR 1.137(b)(3) provides that a petition under 37 CFR 1.137(b) must be accompanied by a statement that the delay was unintentional, but provides that "[t]he Commissioner may require additional information where there is a question whether the delay was unintentional." Where, as here, there is a question whether the initial delay was unintentional, the petitioner must meet the burden of establishing that the delay was unintentional within

the meaning of 35 U.S.C. § 41(a)(7) and 37 CFR 1.137(b). *See* In re Application of G, 11 USPQ2d 1378, 1380 (Comm'r Pats. 1989); 37 CFR 1.137(b). Here, in view of the inordinate delay (almost six years) in resuming prosecution, there is a question whether the entire delay was unintentional. Petitioner should note that the issue is not whether some of the delay was unintentional by any party; rather, the issue is whether the entire delay has been shown to the satisfaction of the Director to be unintentional.

The question under 37 CFR 1.137(b) for period (1) is whether the delay on the part of the party having the right or authority to reply to avoid abandonment (or not reply) was unintentional. Accordingly, any renewed petition must clearly identify the party having the right to reply to avoid abandonment on December 9, 2005. That party, in turn must explain what effort(s) was made to further reply to the outstanding Office action and, further, why no reply was filed. If no effort was made to further reply, then that party must explain why the delay in this application does not result from a deliberate course of action (or inaction). Likewise, as the firm O'Banion and Ritchey was counsel at the time of abandonment, an explanation why this application became abandoned while it was under their control and what efforts made to reply. Copies of any correspondence relating to the filing, or to not filing a further reply to the outstanding Office action are required from responsible person(s) and whoever else was involved with this application at the time of abandonment. Statements are required from any and all persons having firsthand knowledge of the circumstances surrounding the lack of a reply to the outstanding Office action.

As the courts have made clear, it is pointless for the USPTO to revive a long abandoned application without an adequate showing that the delay did not result from a deliberate course of action. *See* Lawman Armor v. Simon, 2005 U.S. Dist. LEXIS 10843, 74 USPQ2d 1633 (DC EMich 2005); Field Hybrids, LLC v. Toyota Motor Corp., 2005 U.S. Dist. LEXIS 1159 (D. Minn Jan. 27, 2005); Lumenyte Int'l Corp. v. Cable Lite Corp., Nos. 96-1011, 96-1077, 1996 U.S. App. LEXIS 16400, 1996 WL 383927 (Fed. Cir. July 9, 1996) (unpublished) (patents held unenforceable due to a finding of inequitable conduct in submitting an inappropriate statement that the abandonment was unintentional).

As to Period (2):

Likewise, where the applicant deliberately chooses not to seek or persist in seeking the revival of an abandoned application, or where the applicant deliberately chooses to delay seeking the revival of an abandoned application, the resulting delay in

seeking revival of the abandoned application cannot be considered as "unintentional" within the meaning of 37 CFR 1.137(b). *See* MPEP 711.03(c).

The language of both 35 U.S.C. § 41(a)(7) and 37 CFR 1.137(b) are clear and unambiguous, and, furthermore, without qualification. That is, the delay in filing the reply during prosecution, as well as in filing the petition seeking revival, must have been, without qualification, "unintentional" for the reply to now be accepted on petition. The Office requires that the entire delay be at least unintentional as a prerequisite to revival of an abandoned application to prevent abuse and injury to the public. *See* H.R. Rep. No. 542, 97th Cong., 2d Sess. 7 (1982), reprinted in 1982 U.S.C.C.A.N. 771 ("[i]n order to prevent abuse and injury to the public the Commissioner . . . could require applicants to act promptly after becoming aware of the abandonment"). The December 1997 change to 37 CFR 1.137 did not create any new right to overcome an intentional delay in seeking revival, or in renewing an attempt at seeking revival, of an abandoned application. *See* Changes to Patent Practice and Procedure; Final Rule Notice, 62 Fed. Reg. 53131, 53160 (October 10, 1997), 1203 Off. Gaz. Pat. Office 63, 87 (October 21, 1997), which clearly stated that any protracted delay (here, over 5 years) could trigger, as here, a request for additional information. As the courts have since made clear, a protracted delay in seeking revival, as here, requires a petitioner's detailed explanation seeking to excuse the delay as opposed to USPTO acceptance of a general allegation of unintentional delay. *See* Lawman Armor v. Simon, 2005 U.S. Dist. LEXIS 10843, 74 USPQ2d 1633, at 1637-8 (DC EMich 2005); Field Hybrids, LLC v. Toyota Motor Corp., 2005 U.S. Dist. LEXIS 1159 (D. Minn Jan. 27, 2005) at *21-*23. Statements are required from any and all persons having firsthand knowledge of the circumstances surrounding the protracted delay, after the abandonment date, in seeking revival.

As noted in MPEP 711.03(c)(II), subsection D, in instances in which such petition was not filed within 1 year of the date of abandonment of the application, applicants should include:

> (A) the date that the applicant first became aware of the abandonment of the application; and
> (B) a showing as to how the delay in discovering the abandoned status of the application occurred despite the exercise of due care or diligence on the part of the applicant.

In either instance, applicant's failure to carry the burden of proof to establish that the "entire" delay was "unavoidable" or "unintentional" may lead to the denial of a petition under 37 CFR 1.137(b), regardless of the circumstances that originally

resulted in the abandonment of the application. *See also* New York University v. Autodesk, 2007 U.S. DIST LEXIS, U.S.District LEXIS 50832, *10 -*12 (S.D.N.Y. 2007)(protracted delay in seeking revival undercuts assertion of unintentional delay).

Any renewed petition may be addressed as follows:

By Mail: Mail Stop PETITION
Commissioner for Patents
P. O. Box 1450
Alexandria, VA 22313-1450

By hand: U. S. Patent and Trademark Office
Customer Service Window, Mail Stop Petitions
Randolph Building
401 Dulany Street
Alexandria, VA 22314

The centralized facsimile number is **(571) 273-8300.**

Correspondence regarding this decision may also be filed through the electronic filing system of the USPTO.

Telephone inquiries concerning this decision should be directed to the undersigned at (571) 272-3215.

Charlema Grant
Petitions Attorney
Office of Petitions

UNITED STATES PATENT AND TRADEMARK OFFICE

Commissioner for Patents
United States Patent and Trademark Office
P.O. Box 1450
Alexandria, VA 22313-1450
www.uspto.gov

DIANHANN GRASTY
511 PENN STREET
CHESTER PA 19013

COPY MAILED

OCT 2 8 2008

OFFICE OF PETITIONS

In re Application of :
Diahann Grasty et al. :
Application No. 10/735,296 : DECISION ON PETITION
Filed: August 17, 2004 :
Attorney Docket No. :

This is a decision on the petition, filed August 18, 2008, which is being treated as a petition under 37 CFR 1.181 (no fee) requesting withdrawal of the holding of abandonment in the above-identified application.

The petition is **GRANTED**.

This application was held abandoned for failure to reply to the non-final Office action mailed March 20. 2007, which set a three (3) month shortened statutory period for reply. A Notice of Abandonment was mailed on February 19, 2008.

Petitioner's statements are confusing. It is stated that the Notice of Abandonment was not received by petitioner, but this would have no bearing on the actual abandonment of the application as it is merely a courtesy letter. The Notice of Abandonment states at the bottom "The applicant did not response to the 'Notice of Informal or Non-responsive Amendment' sent on June 16, 2007." The file record shows that no such Notice of Informal or Non-responsive Amendment was ever mailed by the Office. Since no such notice was mailed, there was no need for petitioner to file any further papers at that point.

Accordingly, the application was not abandoned in fact.

In view of the above, the Notice of Abandonment is hereby vacated and the holding of abandonment withdrawn.

It is noted that the petition included a terminal disclaimer and fee, however a petition under 37 CFR 1.181 requires no terminal disclaimer or fee. The disclaimer is not acceptable and the fee was not processed as the credit card payment was declined.

Telephone inquiries concerning this decision should be directed to Carl Friedman at (571) 272-6842

This application is being referred to the Technology Center Art Unit 2612 for consideration of petitioner's amendment filed June 14, 2007. If the amendment is determined to be informal or non-responsive then a notice to that effect shall be mailed.

Carl Friedman
Petitions Examiner
Office of Petitions

UNITED STATES PATENT AND TRADEMARK OFFICE

Commissioner for Patents
United States Patent and Trademark Office
P.O. Box 1450
Alexandria, VA 22313-1450
www.uspto.gov

WAYNE C. JAESCHKE, JR.
MORRISON & FOERSTER LLP
1650 TYSONS BOULEVARD
SUITE 400
MCLEAN, VA 22102

COPY MAILED

MAY 27 2009

OFFICE OF PETITIONS

In re Application of	:	
Roden et al.	:	DECISION ON PETITION
Application No. 10/735,304	:	TO WITHDRAW
Filed: December 12, 2003	:	FROM RECORD
Attorney Docket No. 144005.00201	:	

This is a decision on the Request to Withdraw as attorney or agent of record under 37 C.F.R. § 1.36(b), filed January 28, 2005.

The request is **NOT APPROVED** because it is moot.

A review of the file record indicates that on October 20, 2005 the power of attorney to Morrison & Foerster LLP was revoked by the assignee of the patent application. Accordingly, the request to withdraw under 37 C.F.R. § 1.36(b) is moot.

All future communications from the Office will be directed to the below-listed address until otherwise notified by applicant.

Telephone inquires concerning this decision should be directed to the undersigned at 571-272-7751. All other inquires concerning either the examination or status of the application should be directed to the Technology Center.

Joan Olszewski
Petitions Examiner
Office of Petitions

cc: Christie, Parker & Hale, LLP
PO Box 7068
Pasadena CA 91109-7068

UNITED STATES PATENT AND TRADEMARK OFFICE

Commissioner for Patents
United States Patent and Trademark Office
P.O. Box 1450
Alexandria, VA 22313-1450
www.uspto.gov

SCHLUMBERGER OILFIELD SERVICES
200 GILLINGHAM LANE
MD 200-9
SUGAR LAND, TX 77478

COPY MAILED

MAR 17 2006

OFFICE OF PETITIONS

In re Application of :
Moriarty, et al. :
Application No. 10/735,312 : ON PETITION
Filed: December 12, 2003 :
Attorney Docket No. 19.0353 :

This is a decision on the petition under 37 CFR 1.137(b), filed March 2, 2006, to revive the above-identified application.

The petition is **GRANTED**.

This application became abandoned for failure to timely file a proper reply to the non-final Office action mailed June 8, 2005. Accordingly, this application became abandoned on September 9, 2005. A Notice of Abandonment was mailed on January 24, 2006.

The file is being forwarded to Technology Center 3600 for review of the "Response To Office Action," filed March 2, 2006.

Telephone inquiries concerning this matter may be directed to the undersigned at (571) 272-3228.

Edward J. Tannouse
Petitions Attorney
Office of Petitions/Patent
Office of the Deputy Commissioner
for Patent Examination Policy

UNITED STATES PATENT AND TRADEMARK OFFICE

Commissioner for Patents
United States Patent and Trademark Office
P.O. Box 1450
Alexandria, VA 22313-1450
www.uspto.gov

SCHERING-PLOUGH CORPORATION
PATENT DEPARTMENT (K-6-1, 1990)
2000 GALLOPING HILL ROAD
KENILWORTH NJ 07033-0530

MAILED

FEB 11 2009

OFFICE OF PETITIONS

In re Application of	:	
Lundy et al.	:	
Application No. 10/735,318	:	DECISION ON PETITION
Filed: December 12, 2003	:	
Attorney Docket No. OT01455	:	

This is a decision on the petition under the unintentional provisions of 37 CFR 1.137(b), filed April 30, 2008, to revive the above-identified application.

The petition is **GRANTED**.

The application became abandoned for failure to reply in a timely manner to the non-final Office action mailed April 18, 2007, which set a shortened statutory period for reply of three (3) months. No extensions of time under the provisions of 37 CFR 1.136(a) were obtained. Accordingly, the application became abandoned on July 19, 2007. A Notice of Abandonment was mailed October 26, 2007.

The petition satisfies the requirements of 37 CFR 1.137(b) in that petitioner has supplied (1) the reply in the form of an Amendment, (2) the petition fee of $1,540.00, and (3) an adequate statement of unintentional delay.

Telephone inquiries concerning this decision should be directed to Joan Olszewski at (571) 272-7751.

This application is being referred to Technology Center AU 1615 for appropriate action by the Examiner in the normal course of business on the reply received.

/Liana Walsh/
Liana Walsh
Petitions Examiner
Office of Petitions

UNITED STATES PATENT AND TRADEMARK OFFICE

UNITED STATES DEPARTMENT OF COMMERCE
United States Patent and Trademark Office
Address: COMMISSIONER FOR PATENTS
P.O. Box 1450
Alexandria, Virginia 22313-1450
www.uspto.gov

APPLICATION NO.	FILING DATE	FIRST NAMED INVENTOR	ATTORNEY DOCKET NO.	CONFIRMATION NO.
10/735,331	12/12/2003	Ronald Yamamoto	MNOAP004	3792

23689 7590 06/30/2008

Jung-hua Kuo
Attorney At Law
PO Box 3275
Los Altos, CA 94024

EXAMINER	
RAMIREZ, JOHN FERNANDO	

ART UNIT	PAPER NUMBER
3737	

MAIL DATE	DELIVERY MODE
06/30/2008	PAPER

Please find below and/or attached an Office communication concerning this application or proceeding.

The time period for reply, if any, is set in the attached communication.

UNITED STATES PATENT AND TRADEMARK OFFICE

Commissioner for Patents
United States Patent and Trademark Office
P.O. Box 1450
Alexandria, VA 22313-1450
www.uspto.gov

Jung-hua Kuo
Attorney At Law
PO Box 3275
Los Altos CA 94024

In re Application of:
YAMAMOTO, RONALD et al
Serial No. 10/735,331
Filed: Dec. 12, 2003
Docket: MNOAP004
Title: PERCUTANEOUS REMOVAL OF SENTINEL LYMPH NODE USING CONTRAST IMAGING FOR IDENTIFICATION

DECISION ON PETITION
UNDER 37 CFR § 1.181

This is a decision on the petition to withdraw the holding of abandonment filed on Jun. 20, 2008. The petition is being considered as a petition pursuant to 37 CFR 1.181(a). No fee is required. The petitioner requests a withdrawal of the holding of abandonment.

The petition is **GRANTED.**

The present application was held abandoned for failure to timely respond to the Non-Final Rejection mailed on Sep. 5, 2007 which set forth a three-month period for reply. Notice of abandonment was mailed on Mar. 17, 2008.

Petitioner asserts that a timely response to the Non-Final Rejection was timely filed on Mar. 5, 2008 and received by USPTO on Mar. 26, 2008. The petitioner has supplied a copy of the amendment as well as a copy of an acknowledgement post-card receipt indicating a receipt date of Mar. 26, 2008. There was a petition of three-month extension of time fee paid according to USPTO Palm system. The response also included a certificate of mailing dated Mar. 5, 2008. Furthermore, there was a copy of the response scanned in the IFW file dated Mar. 26, 2008.

As the petitioner has provided convincing evidence that a timely reply to the Non-Final Office action was received on Mar. 26, 2008, there is no abandonment in fact. Any inconvenience or delay caused to applicant is regretted.

In view of the above, the Notice of Abandonment mailed Mar. 17, 2008 is in error and is hereby vacated. The holding of abandonment is withdrawn. This application is being forwarded to the examiner in Art Unit 3737 for appropriate action.

Frederick R. Schmidt, Director
Technology Center 3700

UNITED STATES PATENT AND TRADEMARK OFFICE

Commissioner for Patents
United States Patent and Trademark Office
P.O. Box 1450
Alexandria, VA 22313-1450
www.uspto.gov

DR. ABHINAV AGGARWAL
100 SAINT AYERS WAY
CHAPEL HILL NC 27517

COPY MAILED
MAY 01 2006
OFFICE OF PETITIONS

In re Application of :
Abhinav Aggarwal :
Application No. 10/735,333 :
Filed: December 12, 2003 : ON PETITION
Title: SYSTEM AND METHOD FOR :
UNIVERSAL IDENTIFICATION OF :
BIOLOGICAL HUMANS :

This is in response to the "Petition to Revive an Abandoned Application," filed February 1, 2006, which is being treated as a Petition for Revival of an Application for Patent Abandoned Unintentionally Under 37 CFR 1.137(b).

The petition is dismissed.

The petition under 37 CFR 1.137(b) will not be treated on its merits, but rather will remain in the file until the United States Patent and Trademark Office (Office) receives a renewed petition under 37 CFR 1.137(b), as well as the payment of the requisite petition fee of $750.00 for a small entity, the amount due on the filing of the petition.[1]

The Office notes:

> 35 U.S.C. 41(a)(7) provides that a petition for the revival of an unintentionally abandoned application or for the unintentionally delayed payment of the issue fee must be accompanied by the petition fee set forth in 37 CFR

[1] A review of the USPTO finance records reveals that petitioner did not pay a petition fee on filing the present petition.

> 1.17(m), unless the petition is filed under 35 U.S.C. 133 or 151 (on the basis of unavoidable delay), in which case the fee is set forth in 37 CFR 1.17(l). Thus, unless the circumstances warrant the withdrawal of the holding of abandonment (i.e., it is determined that the application is not properly held abandoned), the payment of a petition fee to obtain the revival of an abandoned application is a statutory prerequisite to revival of the abandoned application, and cannot be waived.
>
> In addition, the phrase "[o]n filing" in 35 U.S.C. 41(a)(7) means that the petition fee is required for the filing (and not merely the grant) of a petition under 37 CFR 1.137. See H.R. Rep. No. 542, 97th Cong., 2d Sess. 6 (1982), reprinted in 1982 U.S.C.C.A.N. 770 ("[t]he fees set forth in this section are due on filing the petition"). Therefore, the Office: (A) will not refund the petition fee required by 37 CFR 1.17(l) or 1.17(m), regardless of whether the petition under 37 CFR 1.137 is dismissed or denied; and (B) **will not reach the merits of any petition under 37 CFR 1.137 lacking the requisite petition fee.**

MPEP 711.03(c)(III)(B) (emphasis added).

Accordingly, the Office lacks the discretion to, and will not, address the merits of any petition seeking revival of an abandoned application in the absence of the payment of the petition fee required by statute. In this regard, this application is properly considered abandoned by operation of 35 USC § 133 for failure to prosecute.

A request for reconsideration must be submitted within TWO (2) MONTHS from the mail date of this decision. Extensions of time under 37 CFR 1.136(a) are permitted. The reconsideration request should include a cover letter entitled "Renewed Petition under 37 CFR 1.137(b)." The appropriate form is enclosed for applicant's convenience.

The Office reminds applicant of the requirements set forth in 37 CFR 1.72(b) as stated below:

> A brief abstract of the technical disclosure in the specification must commence on a separate sheet, preferably following the claims, under the heading

"Abstract " or "Abstract of the Disclosure." The sheet or sheets presenting the abstract may not include other parts of the application or other material. The abstract in an application filed under 35 U.S.C. 111 may not exceed 150 words in length. The purpose of the abstract is to enable the United States Patent and Trademark Office and the public generally to determine quickly from a cursory inspection the nature and gist of the technical disclosure.

With the renewed petition under 37 CFR 1.137(b), applicant may supplement his previous response to the Notice to File Corrected Application Papers if he so desires.

Further correspondence with respect to this matter should be addressed as follows and **to the attention of Senior Petitions Attorney Christina Tartera Donnell:**

By mail: Mail Stop Petition
Commissioner for Patents
P.O. Box 1450
Alexandria, VA 22313-1450

By FAX: (571) 273-8300
Attn: Office of Petitions

By hand: Customer Service Window
Randolph Building
401 Dulany Street
Alexandria, VA 22314

Telephone inquiries related to this decision may be directed to the undersigned at (571) 272-3211.

Christina Tartera Donnell

Christina Tartera Donnell
Senior Petitions Attorney
Office of Petitions

Enclosure: Form PTO/SB/64

Renewed

PTO/SB/64 (10-05)
Approved for use through 07/31/2006. OMB 0651-0031
U.S. Patent and Trademark Office; U.S. DEPARTMENT OF COMMERCE
Under the Paperwork Reduction Act of 1995, no persons are required to respond to a collection of information unless it displays a valid OMB control number.

PETITION FOR REVIVAL OF AN APPLICATION FOR PATENT ABANDONED UNINTENTIONALLY UNDER 37 CFR 1.137(b)

Docket Number (Optional)

First named inventor:

Application No.: Art Unit:

Filed: Examiner:

Title:

Attention: Office of Petitions
Mail Stop Petition
Commissioner for Patents
P.O. Box 1450
Alexandria, VA 22313-1450
FAX (571) 273-8300

NOTE: If information or assistance is needed in completing this form, please contact Petitions Information at (571) 272-3282.

The above-identified application became abandoned for failure to file a timely and proper reply to a notice or action by the United States Patent and Trademark Office. The date of abandonment is the day after the expiration date of the period set for reply in the office notice or action plus an extensions of time actually obtained.

APPLICANT HEREBY PETITIONS FOR REVIVAL OF THIS APPLICATION

NOTE: A grantable petition requires the following items:
(1) Petition fee;
(2) Reply and/or issue fee;
(3) Terminal disclaimer with disclaimer fee - required for all utility and plant applications filed before June 8, 1995; and for all design applications; and
(4) Statement that the entire delay was unintentional.

1.Petition fee

☐ Small entity-fee $ _____ (37 CFR 1.17(m)). Applicant claims small entity status. See 37 CFR 1.27.

☐ Other than small entity – fee $ _____ (37 CFR 1.17(m))

2. Reply and/or fee

A. The reply and/or fee to the above-noted Office action in the form of _____(identify type of reply):

☐ has been filed previously on _____.
☐ is enclosed herewith.

B. The issue fee and publication fee (if applicable) of $ _____.

☐ has been paid previously on _____.
☐ is enclosed herewith.

This collection of information is required by 37 CFR 1.137(b). The information is required to obtain or retain a benefit by the public which is to file (and by the USPTO to process) an application. Confidentiality is governed by 35 U.S.C. 122 and 37 CFR 1.11 and 1.14. This collection is estimated to take 1.0 hour to complete, including gathering, preparing, and submitting the completed application form to the USPTO. Time will vary depending upon the individual case. Any comments on the amount of time you require to complete this form and/or suggestions for reducing this burden, should be sent to the Chief Information Officer, U.S. Patent and Trademark Office, U.S. Department of Commerce, P.O. Box 1450, Alexandria, VA 22313-1450. DO NOT SEND FEES OR COMPLETED FORMS TO THIS ADDRESS. **SEND TO: Mail Stop Petition, Commissioner for Patents, P.O. Box 1450, Alexandria, VA 22313-1450.**

If you need assistance in completing the form, call 1-800-PTO-9199 and select option 2.

3. Terminal disclaimer with disclaimer fee

☐ Since this utility/plant application was filed on or after June 8, 1995, no terminal disclaimer is required.

☐ A terminal disclaimer (and disclaimer fee (37 CFR 1.20(d)) of $ _____ for a small entity or $ _____ for other than a small entity) disclaiming the required period of time is enclosed herewith (see PTO/SB/63).

4. STATEMENT: The entire delay in filing the required reply from the due date for the required reply until the filing of a grantable petition under 37 CFR 1.137(b) was unintentional. [NOTE: The United States Patent and Trademark Office may require additional information if there is a question as to whether either the abandonment or the delay in filing a petition under 37 CFR 1.137(b) was unintentional (MPEP 711.03(c), subsections (III)(C) and (D)).]

WARNING:

Petitioner/applicant is cautioned to avoid submitting personal information in documents filed in a patent application that may contribute to identity theft. Personal information such as social security numbers, bank account numbers, or credit card numbers (other than a check or credit card authorization form PTO-2038 submitted for payment purposes) is never required by the USPTO to support a petition or an application. If this type of personal information is included in documents submitted to the USPTO, petitioners/applicants should consider redacting such personal information from the documents before submitting them to the USPTO. Petitioner/applicant is advised that the record of a patent application is available to the public after publication of the application (unless a non-publication request in compliance with 37 CFR 1.213(a) is made in the application) or issuance of a patent. Furthermore, the record from an abandoned application may also be available to the public if the application is referenced in a published application or an issued patent (see 37 CFR 1.14). Checks and credit card authorization forms PTO-2038 submitted for payment purposes are not retained in the application file and therefore are not publicly available.

_____ _____
Signature Date

_____ _____
Typed or printed name Registration Number, if applicable

_____ _____
Address Telephone Number

_____
Address

Enclosures: ☐ Fee Payment

☐ Reply

☐ Terminal Disclaimer Form

☐ Additional sheets containing statements establishing unintentional delay

☐ Other:_____

CERTIFICATE OF MAILING OR TRANSMISSION [37 CFR 1.8(a)]

I hereby certify that this correspondence is being:

☐ Deposited with the United States Postal Service on the date shown below with sufficient postage as first class mail in an envelope addressed to: Mail Stop Petition, Commissioner for Patents, P. O. Box 1450, Alexandria, VA 22313-1450.

☐ Transmitted by facsimile on the date shown below to the United States Patent and Trademark Office as (571) 273-8300.

_____ _____
Date Signature

_____
Typed or printed name of person signing certificate

Privacy Act Statement

The **Privacy Act of 1974 (P.L. 93-579)** requires that you be given certain information in connection with your submission of the attached form related to a patent application or patent. Accordingly, pursuant to the requirements of the Act, please be advised that: (1) the general authority for the collection of this information is 35 U.S.C. 2(b)(2); (2) furnishing of the information solicited is voluntary; and (3) the principal purpose for which the information is used by the U.S. Patent and Trademark Office is to process and/or examine your submission related to a patent application or patent. If you do not furnish the requested information, the U.S. Patent and Trademark Office may not be able to process and/or examine your submission, which may result in termination of proceedings or abandonment of the application or expiration of the patent.

The information provided by you in this form will be subject to the following routine uses:

1. The information on this form will be treated confidentially to the extent allowed under the Freedom of Information Act (5 U.S.C. 552) and the Privacy Act (5 U.S.C 552a). Records from this system of records may be disclosed to the Department of Justice to determine whether disclosure of these records is required by the Freedom of Information Act.
2. A record from this system of records may be disclosed, as a routine use, in the course of presenting evidence to a court, magistrate, or administrative tribunal, including disclosures to opposing counsel in the course of settlement negotiations.
3. A record in this system of records may be disclosed, as a routine use, to a Member of Congress submitting a request involving an individual, to whom the record pertains, when the individual has requested assistance from the Member with respect to the subject matter of the record.
4. A record in this system of records may be disclosed, as a routine use, to a contractor of the Agency having need for the information in order to perform a contract. Recipients of information shall be required to comply with the requirements of the Privacy Act of 1974, as amended, pursuant to 5 U.S.C. 552a(m).
5. A record related to an International Application filed under the Patent Cooperation Treaty in this system of records may be disclosed, as a routine use, to the International Bureau of the World Intellectual Property Organization, pursuant to the Patent Cooperation Treaty.
6. A record in this system of records may be disclosed, as a routine use, to another federal agency for purposes of National Security review (35 U.S.C. 181) and for review pursuant to the Atomic Energy Act (42 U.S.C. 218(c)).
7. A record from this system of records may be disclosed, as a routine use, to the Administrator, General Services, or his/her designee, during an inspection of records conducted by GSA as part of that agency's responsibility to recommend improvements in records management practices and programs, under authority of 44 U.S.C. 2904 and 2906. Such disclosure shall be made in accordance with the GSA regulations governing inspection of records for this purpose, and any other relevant (*i.e.*, GSA or Commerce) directive. Such disclosure shall not be used to make determinations about individuals.
8. A record from this system of records may be disclosed, as a routine use, to the public after either publication of the application pursuant to 35 U.S.C. 122(b) or issuance of a patent pursuant to 35 U.S.C. 151. Further, a record may be disclosed, subject to the limitations of 37 CFR 1.14, as a routine use, to the public if the record was filed in an application which became abandoned or in which the proceedings were terminated and which application is referenced by either a published application, an application open to public inspection or an issued patent.
9. A record from this system of records may be disclosed, as a routine use, to a Federal, State, or local law enforcement agency, if the USPTO becomes aware of a violation or potential violation of law or regulation.

UNITED STATES PATENT AND TRADEMARK OFFICE

Commissioner for Patents
United States Patent and Trademark Office
P.O. Box 1450
Alexandria, VA 22313-1450
www.uspto.gov

DR. ABHINAV AGGARWAL
100 SAINT AYERS WAY
CHAPEL HILL NC 27517

COPY MAILED
OCT 1 8 2006
OFFICE OF PETITIONS

In re Application of :
Abhinav Aggarwal :
Application No. 10/735,333 :
Filed: December 12, 2003 : ON PETITION
Title: SYSTEM AND METHOD FOR :
UNIVERSAL IDENTIFICATION OF :
BIOLOGICAL HUMANS :

This is in response to the petition filed June 22, 2006, to withdraw the holding of abandonment.

On April 27, 2004, the Office mailed a Notice to File Corrected Application Papers ("Notice "), which set a two-month extendable period to reply. The application became abandoned on June 28, 2004, for failure to submit a timely response to the Notice. On January 6, 2005, the Office mailed a Notice of Abandonment. On February 1, 2005, petitioner filed a petition to revive the application. On May 1, 2006, the Office mailed a communication to petitioner, indicating that the Office could not treat the petition on the merits because petitioner did not submit the requisite petition fee.

On June 22, 2006, petitioner filed the present petition, requesting that the Office withdraw the holding of abandonment due to non-receipt of the Notice. Additionally, petitioner submitted a one page Abstract and a copy of his docket records for this application.

A review of the record indicates no irregularity in the mailing of the Notice, and in the absence of any irregularity in the mailing, there is a strong presumption that the Notice was properly mailed to the address of record. Nevertheless, petitioner asserted that although he submitted a change of correspondence address with the USPTO subsequent to the mailing of the Notice, he has an arrangement in place to date for collecting all mail delivered to his previous address. Additionally, petitioner stated that he received the Notice of Abandonment in this application, which was delivered to his previous address.

To establish non-receipt of the Notice, petitioner must provide an explanation of the arrangement he has in place for receiving and collecting mail delivered to his previous address. Petitioner must include a statement from petitioner, or any other person at the address who may have firsthand

knowledge of the events, indicating how correspondence from the USPTO is handled upon delivery to the previous address. Specifically, the statement(s) must indicate where correspondence from the USPTO is kept and that a search was conducted of the location, but the Notice was not found.

For the reasons stated, the petition to withdraw the holding of abandonment is **dismissed**.

Any request for reconsideration of the dismissal of the petition to withdraw the holding of abandonment due to nonreceipt of the Notice must be submitted within **TWO (2) MONTHS** from the mailing date of this decision. The request for reconsideration should include a cover letter entitled "Renewed Petition under 37 CFR 1.181 to Withdraw the Holding of Abandonment," as well as statements and documentary evidence, as indicate above. Extensions of time are permitted under 37 CFR 1.136(a).

Further correspondence with respect to this matter should be addressed as follows:

By mail: Mail Stop Petition
Commissioner for Patents
P.O. Box 1450
Alexandria, VA 22313-1450

By FAX: (571) 273-8300
Attn: Office of Petitions

By hand: Customer Service Window
Randolph Building
401 Dulany Street
Alexandria, VA 22314

Telephone inquiries related to this decision may be directed to the undersigned at (571) 272-3211.

Christina Tartera Donnell

Christina Tartera Donnell
Senior Petitions Attorney
Office of Petitions

UNITED STATES PATENT AND TRADEMARK OFFICE

Commissioner for Patents
United States Patent and Trademark Office
P.O. Box 1450
Alexandria, VA 22313-1450
www.uspto.gov

DR. ABHINAV AGGARWAL
100 SAINT AYERS WAY
CHAPEL HILL NC 27517

COPY MAILED
NOV 17 2006
OFFICE OF PETITIONS

In re Application of :
Abhinav Aggarwal :
Application No. 10/735,333 : DECISION ON PETITION
Filed: 12/12/2003 :
Title: System and method for universal :
identification of biological humans :

This is in response to the renewed petition under 37 CFR 1.181, filed November 12, 2006, to withdraw the holding of abandonment.

On April 27, 2004, the Office mailed a Notice to File Corrected Application Papers ("Notice"), which set a two-month extendable period to reply. The application became abandoned on June 28, 2004, for failure to submit a timely response to the Notice. On January 6, 2005, the Office mailed a Notice of Abandonment. On February 1, 2005, petitioner filed a petition to revive the application. On May 1, 2006, the Office mailed a communication to petitioner, indicating that the Office could not treat the petition on the merits because petitioner did not submit the requisite petition fee. On June 22, 2006, petitioner filed a petition to withdraw the holding of abandonment due to non-receipt of the Notice, accompanied by a one page Abstract and a copy of his docket records for this application. The petition was dismissed by the decision of October 18, 2006. On November 12, 2006, petitioner filed the present renewed petition under 37 CFR 1.181.

In support of the assertion of non-receipt of the Notice, petitioner explained the arrangement he had in place with his sister for receiving and collecting mail delivered to his previous address. Additionally, petitioner provided a statement from his sister, who had lived at the address and had firsthand knowledge of the events, setting forth the manner in which correspondence from the USPTO was handled upon delivery to the previous address. Specifically, petitioner and his sister indicated where correspondence from the USPTO was kept and that a search was conducted of the location, but the Notice was not found. Lastly, petitioner demonstrated that he had an adequate system in place for tracking response due dates and established that the Notice was not entered into that system. In view thereof, the holding of abandonment is hereby withdrawn.

The petition under 37 CFR 1.181 to withdraw the holding of abandonment is **GRANTED**. No petition fee is required.

The Office of Initial Patent Examination ("OIPE") has been advised of this decision. The matter is being referred to OIPE for further processing.

Telephone inquiries related to this decision may be directed to the undersigned at (571) 272-3211. All questions regarding the status of the application should be referred to OIPE directly.

Christina Tartera Donnell

Christina Tartera Donnell
Senior Petitions Attorney
Office of Petitions

UNITED STATES PATENT AND TRADEMARK OFFICE

Commissioner for Patents
United States Patent and Trademark Office
P.O. Box 1450
Alexandria, VA 22313-1450
www.uspto.gov

MARTIN & FERRARO LLP
1557 LAKE O'PINES STREET NE
HARTVILLE, OH 44632

COPY MAILED

JUL 2 8 2005

OFFICE OF PETITIONS

In re Application of :
David F. Meschan :
Application No. 10/735,343 : DECISION GRANTING PETITION
Filed: December 11, 2003 : UNDER 37 CFR 1.313(c)(2)
Attorney Docket No. 104.0004-03000 :

This is a decision on the petition, filed July 27, 2005, under 37 CFR 1.313(c)(2) to withdraw the above-identified application from issue after payment of the issue fee.

The petition is **GRANTED**.

The above-identified application is withdrawn from issue for consideration of a submission under 37 CFR 1.114 (request for continued examination). See 37 CFR 1.313(c)(2).

Petitioner is advised that the issue fee paid on April 18, 2005 in the above-identified application cannot be refunded. If, however, the above-identified application is again allowed, petitioner may request that it be applied towards the issue fee required by the new Notice of Allowance.[1]

Telephone inquiries should be directed to the undersigned at (571) 272-3218.

This matter is being referred to Technology Center AU 3728 for processing of the request for continued examination under 37 CFR 1.114 and for consideration of the amendment and Information Disclosure Statement.

Frances Hicks
Petitions Examiner
Office of Petitions

---

[1] *The request to apply the issue fee to the new Notice may be satisfied by completing and returning the new Issue Fee Transmittal Form PTOL-85(b), which includes the following language thereon: "Commissioner for Patents is requested to apply the Issue Fee and Publication Fee (if any) or re-apply any previously paid issue fee to the application identified above." Petitioner is advised that, whether a fee is indicated as being due or not, the Issue Fee Transmittal Form* ***must*** *be completed and timely submitted to avoid abandonment. Note the language in bold text on the first page of the Notice of Allowance and Fee(s) Due (PTOL-85).*

UNITED STATES PATENT AND TRADEMARK OFFICE

Commissioner for Patents
United States Patent and Trademark Office
P.O. Box 1450
Alexandria, VA 22313-1450
www.uspto.gov

Intellectual Property/Technology Law
P.O. Box 14329
Research Triangle Park, NC 22709

COPY MAILED

NOV 1 4 2008

In re Application of	:	
Chalom Sayada	:	
Application No. 10/735,344	:	DECISION ON PETITION
Filed: December 1, 2003	:	
Attorney Docket No. 4354-112	:	

This is a decision on the petition under the unintentional provisions of 37 CFR 1.137(b), filed October 31, 2008, to revive the above-identified application.

The petition is **GRANTED**.

The application became abandoned for failure to reply in a timely manner to the non-final Office action mailed, August 10, 2007, which set a shortened statutory period for reply of three (3) months. No extensions of time under the provisions of 37 CFR 1.136(a) were obtained. Accordingly, the application became abandoned on November 11, 2007.

The petition satisfies the requirements of 37 CFR 1.137(b) in that petitioner has supplied (1) the reply in the form of an amendment, (2) the petition fee of $810, and (3) a proper statement of unintentional delay.

Telephone inquiries concerning this decision should be directed to Shelley Clement at (571)272-6052 or in her absence to the undersigned at (571)272-7099.

This application is being referred to Technology Center AU 1617 for appropriate action by the Examiner in the normal course of business on the reply received

David Bucci
Petitions Examiner
Office of Petitions

UNITED STATES PATENT AND TRADEMARK OFFICE

Commissioner for Patents
United States Patent and Trademark Office
P.O. Box 1450
Alexandria, VA 22313-1450
www.uspto.gov

MCDONNELL BOEHNEN HULBERT & BERGHOFF LLP
300 S. WACKER DRIVE
32ND FLOOR
CHICAGO IL 60606

COPY MAILED

MAY 21 2008

OFFICE OF PETITIONS

In re Application of	:	
Yijia P. Bao et al	:	
Application No. 10/735,357	:	ON PETITION
Filed: December 12, 2003	:	
Attorney Docket No. 02-1227-A	:	

This is a decision on the petition under 37 CFR 1.137(b), filed January 30, 2008, to revive the above-identified application.

The petition is **GRANTED**.

The above-identified application became abandoned for failure to submit an amendment in a timely manner to the non-final Office action mailed June 11, 2007, which set a shortened statutory period for response of three (3) months. Accordingly, by operation of law, the above-identified application became abandoned on September 12, 2007.

The petition satisfies the conditions for revival pursuant to the provisions of 37 CFR 1.137(b) in that (1) the reply in the form of an amendment; (2) the petition fee of $770; and (3) the required statement of unintentional delay have been received. Accordingly, the amendment is accepted as having been unintentionally delayed.

Telephone inquiries concerning this decision should be directed to Carl Friedman at (571) 272-6842.

The application file is being referred to Technology Center Art Unit 1634 for consideration of the amendment in due course.

Carl Friedman
Petitions Examiner
Office of Petitions

UNITED STATES PATENT AND TRADEMARK OFFICE

UNITED STATES DEPARTMENT OF COMMERCE
United States Patent and Trademark Office
Address: COMMISSIONER FOR PATENTS
P.O. Box 1450
Alexandria, Virginia 22313-1450
www.uspto.gov

APPL NO.	FILING OR 371 (c) DATE	ART UNIT	FIL FEE REC'D	ATTY.DOCKET NO	DRAWINGS	TOT CLMS	IND CLMS
10/735,358	12/12/2003	2855	557	9288a	10	20	7

CONFIRMATION NO. 1831

CORRECTED FILING RECEIPT

OC000000012425418

21905
CONNORS ASSOCIATES
1600 DOVE ST
SUITE 220
NEWPORT BEACH, CA 92660

Date Mailed: 04/30/2004

Receipt is acknowledged of this regular Patent Application. It will be considered in its order and you will be notified as to the results of the examination. Be sure to provide the U.S. APPLICATION NUMBER, FILING DATE, NAME OF APPLICANT, and TITLE OF INVENTION when inquiring about this application. Fees transmitted by check or draft are subject to collection. Please verify the accuracy of the data presented on this receipt. **If an error is noted on this Filing Receipt, please write to the Office of Initial Patent Examination's Filing Receipt Corrections, facsimile number 703-746-9195. Please provide a copy of this Filing Receipt with the changes noted thereon. If you received a "Notice to File Missing Parts" for this application, please submit any corrections to this Filing Receipt with your reply to the Notice. When the USPTO processes the reply to the Notice, the USPTO will generate another Filing Receipt incorporating the requested corrections (if appropriate).**

Applicant(s)

Roland Aldridge, Monrovia, CA;
Steven Kirchnavy, Mission Viejo, CA;

Domestic Priority data as claimed by applicant

This application is a CON of 10/106,635 03/26/2002 PAT 6,675,629

Foreign Applications

If Required, Foreign Filing License Granted: 03/23/2004

Projected Publication Date: 07/29/2004

Non-Publication Request: No

Early Publication Request: No

**** SMALL ENTITY ****

Title

Method of and instrument for analyzing a gas

Preliminary Class

073

LICENSE FOR FOREIGN FILING UNDER
Title 35, United States Code, Section 184
Title 37, Code of Federal Regulations, 5.11 & 5.15

GRANTED

The applicant has been granted a license under 35 U.S.C. 184, if the phrase "IF REQUIRED, FOREIGN FILING LICENSE GRANTED" followed by a date appears on this form. Such licenses are issued in all applications where the conditions for issuance of a license have been met, regardless of whether or not a license may be required as set forth in 37 CFR 5.15. The scope and limitations of this license are set forth in 37 CFR 5.15(a) unless an earlier license has been issued under 37 CFR 5.15(b). The license is subject to revocation upon written notification. The date indicated is the effective date of the license, unless an earlier license of similar scope has been granted under 37 CFR 5.13 or 5.14.

This license is to be retained by the licensee and may be used at any time on or after the effective date thereof unless it is revoked. This license is automatically transferred to any related applications(s) filed under 37 CFR 1.53(d). This license is not retroactive.

The grant of a license does not in any way lessen the responsibility of a licensee for the security of the subject matter as imposed by any Government contract or the provisions of existing laws relating to espionage and the national security or the export of technical data. Licensees should apprise themselves of current regulations especially with respect to certain countries, of other agencies, particularly the Office of Defense Trade Controls, Department of State (with respect to Arms, Munitions and Implements of War (22 CFR 121-128)); the Office of Export Administration, Department of Commerce (15 CFR 370.10 (j)); the Office of Foreign Assets Control, Department of Treasury (31 CFR Parts 500+) and the Department of Energy.

NOT GRANTED

No license under 35 U.S.C. 184 has been granted at this time, if the phrase "IF REQUIRED, FOREIGN FILING LICENSE GRANTED" DOES NOT appear on this form. Applicant may still petition for a license under 37 CFR 5.12, if a license is desired before the expiration of 6 months from the filing date of the application. If 6 months has lapsed from the filing date of this application and the licensee has not received any indication of a secrecy order under 35 U.S.C. 181, the licensee may foreign file the application pursuant to 37 CFR 5.15(b).

UNITED STATES DEPARTMENT OF COMMERCE
Patent and Trademark Office
ASSISTANT SECRETARY OF COMMERCE AND
COMMISSIONER OF PATENTS AND TRADEMARKS
Washington, DC 20231

1/11/08

Patent No. :7178772
Inventor(s) : Riker, Ronald D.
Issued : 2/20/2007
Title : MAILBOX POST BRACKET
Atty.doc./File No.

Request for Certificates of Correction

Consideration has been given to your request for the issuance of a Certificate of Correction, for the above – identified patent under the provisions of CFR 1.322.

Inspection of the application for the patent reveals that item [56] is printed in accordance with the record. Therefore being no fault on the Patent and Trademark Office, It has no authority to issue a certificate of correction under the provision of 1.322.

In view of the forgoing, your request in this matter, is hereby denied.

Future written correspondence concerning this matter should be filed and directed to Decisions & Certificates of Correction Branch.

Henry Randall
Cecelia Newman
Decisions & Certificates
of Correction Branch
(703) 308-9390 Ext. 108

Mark D. Perdue
Storm LLP
901 Main Street, Suite 7100
Dallas, TX 75202

HR/CBN

UNITED STATES PATENT AND TRADEMARK OFFICE

Commissioner for Patents
United States Patent and Trademark Office
P.O. Box 1450
Alexandria, VA 22313-1450
www.uspto.gov

BUSH INTELLECTUAL PROPERTY LAW
C/O CPA GLOBAL
P.O. BOX 52050
MINNEAPOLIS MN 55402

MAILED
OCT 19 2009
OFFICE OF PETITIONS

In re Application of	:	
Diana J. Parsons	:	
Application No. 10/735,362	:	DECISION ON PETITION
Filed: December 12, 2003	:	UNDER 37 CFR 1.137(b)
Attorney Docket No. parsons 3	:	

This is a decision on the petition, filed August 26, 2009, which is being treated as a petition under 37 CFR 1.137(b) to revive the instant nonprovisional application for failure to timely notify the U.S. Patent and Trademark (USPTO) of the filing of an application in a foreign country, or under a multinational treaty that requires publication of applications eighteen months after filing. *See* 37 CFR 1.137(f).

The petition is **DISMISSED** as inappropriate for the reasons stated below.

The record discloses that, on December 12, 2003, the date of filing of the instant application, a Request and Certification under 35 U.S.C. § 122(b)(2)(B)(i) was filed certifying that "the invention disclosed in the above-referenced patent **application has not and will not** be the subject of an application filed in another country, or under a multilateral international agreement, that requires publication at eighteen months after filing."

Petitioner now requests under 35 U.S.C. § 122(b)(2)(B)(ii) that the Request and Certification Under 35 U.S.C. § 122(b)(2)(B)(i) be rescinded and the application revived because this application became abandoned for failure to notify the Office within 45 days of the filing of a corresponding international or foreign application. In this regard, petitioner states that the subject application is a CIP application of U.S. Application No. 10/047,335, filed on January 14, 2002, which is the subject of a PCT application (PCT/US02/27570), filed on August 28, 2002, which date is prior to the date of filing the instant application.

The instant nonprovisional application did not become abandoned as a result of the filing of a corresponding application filed in another country, or under a multilateral international agreement, **subsequent** to the filing of the present application. In this regard, 35 U.S.C. § 122((b)(2)(B)(iii) states:

> An applicant who has made a request under clause (i) but who **subsequently files, in a foreign country or under a multilateral international agreement** specified in clause (i), an application directed to the invention disclosed in the application filed in the Patent and Trademark Office, shall notify the Director of such filing not later than 45 days **after the date of the filing of such foreign or international application**. A failure of the applicant to provide such notice within the prescribed period shall result in the application being regarded as abandoned, unless it is shown to the satisfaction of the Director that the delay in submitting the notice was unintentional [emphasis supplied].

The facts of this case are that the subject application was filed on December 12, 2003, and the corresponding foreign application was filed on August 28, 2002. The statute does not provide for the situation where a certification under 35 U.S.C. § 122(b)(2)(B)(i) was made, despite the fact that an application was previously filed in another country or under the multilateral international agreement. The statute at 35 U.S.C. § 122(b)(2)(B)(iii) only provides for revival in the situation where a certification was made under 35 U.S.C. § 122(b)(2)(B)(i) at the time of filing the application and an application was subsequently filed in a foreign country without notifying the Office within 45 days of the filing thereof.

In view of the above and since this application did not become abandoned pursuant to the provisions of 35 U.S.C. § 122(b)(2)(B)(iii), a petition to revive under the provisions of 37 CFR 1.137(f) is inappropriate and must be dismissed.

The previous Request and Certification under 35 U.S.C. § 122(b)(2)(B)(i) has been rescinded. A Notice Regarding Rescission of Nonpublication Request which sets forth the projected publication date of January 28, 2010 accompanies this decision on petition.

The rules and statutory provisions governing the operations of the U.S. Patent and Trademark Office require payment of a fee on filing each petition. *See* 35 U.S.C. § 41(c)(7). Accordingly, the petition fee of $810.00 will not be refunded.

This application is being forwarded to Technology Center AU 1611 to await a reply to the final Office action mailed June 25, 2009.

Any inquiries concerning this decision may be directed to Joan Olszewski at (571) 272-7751.

/Liana Walsh/
Liana Walsh
Petitions Examiner
Office of Petitions

ATTACHMENT: Notice Regarding Rescission of Nonpublication

UNITED STATES PATENT AND TRADEMARK OFFICE

UNITED STATES DEPARTMENT OF COMMERCE
United States Patent and Trademark Office
Address: COMMISSIONER FOR PATENTS
P.O. Box 1450
Alexandria, Virginia 22313-1450
www.uspto.gov

APPLICATION NUMBER	FILING OR 371(C) DATE	FIRST NAMED APPLICANT	ATTY. DOCKET NO./TITLE
10/735,362	12/12/2003	Diana J. Parsons	parsons 3

CONFIRMATION NO. 1804

40198
BUSH INTELLECTUAL PROPERTY LAW
c/o CPA Global
P.O. Box 52050
Minneapolis, MN 55402

NONPUBLICATION RESCISSION LETTER

OC000000038329154

Date Mailed: 10/16/2009

Communication Regarding Rescission Of Nonpublication Request and/or Notice of Foreign Filing

Applicant's rescission of the previously-filed nonpublication request and/or notice of foreign filing is acknowledged. The paper has been reflected in the Patent and Trademark Office's (USPTO's) computer records so that the earliest possible projected publication date can be assigned.

The projected publication date is 01/28/2010.

If applicant rescinded the nonpublication request before or on the date of "foreign filing,"[1] then no notice of foreign filing is required.

If applicant foreign filed the application after filing the above application and before filing the rescission, and the rescission did not also include a notice of foreign filing, then a notice of foreign filing (not merely a rescission) is required to be filed within 45 days of the date of foreign filing. See 35 U.S.C. § 122(b)(2)(B)(iii), and Clarification of the United States Patent and Trademark Office's Interpretation of the Provisions of 35 U.S.C. § 122(b)(2)(B)(ii)-(iv), 1272 Off. Gaz. Pat. Office 22 (July 1, 2003).

If a notice of foreign filing is required and is not filed within 45 days of the date of foreign filing, then the application becomes abandoned pursuant to 35 U.S.C. § 122(b)(2)(B)(iii). In this situation, applicant should either file a petition to revive or notify the Office that the application is abandoned. See 37 CFR 1.137(f). Any such petition to revive will be forwarded to the Office of Petitions for a decision. Note that the filing of the petition will not operate to stay any period of reply that may be running against the application.

Questions regarding petitions to revive should be directed to the Office of Petitions at (571) 272-3282.

[1] Note, for purpose of this notice, that "foreign filing" means "filing an application directed to the same invention in another country, or under a multilateral international agreement, that requires publication of applications 18 months after filing".

/jolszewski/

Office of Data Management, Application Assistance Unit (571) 272-4000, or (571) 272-4200, or 1-888-786-0101

UNITED STATES PATENT AND TRADEMARK OFFICE

OFFICE

SERIAL NUMBER	FILING DATE	FIRST NAMED APPLICANT	ATTORNEY DOCKET NO.
10/735388	12/12/03	CHALLENER, DAVID CARROLL	RP920020048US1

ROGITZ & ASSOCIATES
750 B STREET
SUITE 3120
SAN DIEGO CA 92101

EXAMINER	
BANKS,CORBANN	
ART UNIT	PAPER NUMBER
2132	

DATE MAILED: 7/26/07

NOTICE OF RESCINDED ABANDONMENT

☐ In response to your communication filed 4/25/07

☒ Through inadvertence, a Notice of Abandonment was mailed in the above-identified application. The Notice of Abandonment is hereby rescinded.

For Manager, Publications Division
Office of Patent Publication
571-272-4200

UNITED STATES PATENT AND TRADEMARK OFFICE

COMMISSIONER FOR PATENTS
UNITED STATES PATENT AND TRADEMARK OFFICE
P.O. BOX 1450
ALEXANDRIA, VA 22313-1450
www.uspto.gov

MR. GLEN BRUNER
305 VINE
ELWOOD, KS 66090

COPY MAILED

JUL 17 2006

OFFICE OF PETITIONS

In re Application of	:	
Glen Bruner	:	
Application No. 10/735,396	:	
Filed: October 18, 2004	:	ON PETITION
Title of Invention: NIGHT	:	
FISHMAN A ROD REEL HOLDER	:	

This is a decision on the Petition to Withdraw Holding of Abandonment for Failure to Receive Office Action, filed December 15, 2005. The petition is properly treated under 37 CFR 1.181(a). The delay in treating this petition is regretted.

The petition is **dismissed**.

Any further petition to revive the above-identified application must be submitted within TWO (2) MONTHS from the mail date of this decision. Extensions of time under 37 CFR 1.136(a) are permitted. The reconsideration request should include a cover letter entitled "Renewed Petition under [insert the applicable code section]." This is **not** final agency action within the meaning of 5 U.S.C. § 704.

The above-identified application became abandoned for failure to reply in a timely manner to the non-final Office action, mailed January 12, 2005. The Office action set a three (3) month period for reply, and provided for extensions of time under 37 CFR 1.136(a). No reply having been received, the application became abandoned April 13, 2005. A Notice of Abandonment was mailed on November 30, 2005.

The instant petition

Applicant requests that the holding of abandonment in this application be withdrawn because Applicant did not receive the Office action. Applicant says that the main reason he did not

receive the Office action is that he moved on March 1, 2005, and he changed his address at the Post office, but he did not receive anything until 2005.

Applicable Law, Rules and MPEP

Applicant is advised that an allegation that an Office action was not received may be considered as a petition for the withdrawal of the holding of abandonment. If the allegation is adequately supported, the petition may be granted and a new Office action mailed. The showing required to establish non-receipt of an Office communication must include:

1. A statement from the Applicant stating that the Office communication was not received by the Applicant and attesting to the fact that a search of the file jacket and docket records indicate that the Office communication was not received.

2. A copy of the file jacket and docket record where the non-received Office communication would have been entered had it been received and docketed must be attached to and referenced in Applicant's statement.

Accordingly, Applicant's assertion, that the Office action was not received, is insufficient to justify withdrawing the holding of abandonment. Applicant must also attest to the fact that a search of the file jacket and docket records indicate that the Notice was not received, and provide a copy of the docket record (or file jacket) where the non-received Notice would have been entered had it been received and docketed.

Analysis

A review of Office records indicate that the final Office action was properly mailed to the correspondence address of record. Absent any irregularities in the mail, correspondence is presumed to have been delivered to the correspondence address of record. A review of the file reveals no irregularity in the mailing. Moreover, Office records indicate that the Office communication was mailed on January 12, 2005. Applicant moved on March 1, 2005, six weeks after we mailed the Office action. As such, the fact that Applicant moved in March should have no

bearing on whether Applicant received the Office action mailed in January.

Applicant should file a request for reconsideration of this petition and include the necessary statements and copies of his file jacket and docket records.

Further, Office records reveal that Applicants failed to file a Change of Correspondence Address. Applicant tells this Office in his petition that he has moved; however, Applicant is advised that he must file a separate paper, title the paper "Change of Correspondence Address", and file it separate from any other correspondence in order for the change of address to be effective. See, 37 CFR 1.4(c).

Conclusion

The petition is dismissed.

Further correspondence with respect to this matter should be addressed as follows:

By mail: Commissioner for Patents
PO Box 1450
Alexandria, VA 22313-1450

By FAX: (571) 273-8300
Attn: Office of Petitions

By hand: Customer Service Window
Randolph Building
401 Dulany Street
Alexandria, VA 22314

Telephone inquiries concerning this matter should be directed to the undersigned at (571) 272-3232.

Derek L. Woods
Attorney
Office of Petitions

UNITED STATES PATENT AND TRADEMARK OFFICE

COMMISSIONER FOR PATENTS
UNITED STATES PATENT AND TRADEMARK OFFICE
P.O. BOX 1450
ALEXANDRIA, VA 22313-1450
www.uspto.gov

MAILED
FROM DIRECTORS OFFICE

NOV 17 2004

TECHNOLOGY CENTER 3600

Myers & Kaplan, Intellectual Property Law, L.L.C.
1899 Powers Ferry Road
Suite 310
Atlanta, GA 30339

In re application of
Robert Indech
Application No. 10/735,406
Filed: December 12, 2003
For: APPARATUS AND METHOD FOR FACILITATING NUCLEAR FUSION

DECISION ON PETITION TO MAKE SPECIAL (ENERGY)

This is a decision on the petition filed December 12, 2003 under 37 CFR 1.102 (c) to make the above-identified application special under the procedure set forth in MPEP 708.02, Section VI: Energy.

A grantable petition to make an application special under 37 C.F.R. 1.102 (c), MPEP 708.02, Section VI for an invention which materially contributes to (A) the discovery or development of energy resources, or (B) the more efficient utilization and conservation of energy resources must be accompanied by statements under 37 CFR 1.102 by applicants or their attorney explaining how the invention materially contributes to category (A) or (B) set forth above.

Applicant states that "(t)he present invention provides an apparatus and method for facilitating nuclear fusion, wherein micro-scale, controlled hydrogen nuclear fusion is promoted on and over a geometrically-enhanced reacting surface comprising a plurality of cone-shaped structures (or other sharply-pointed structures, or protrusions comprising apexes) extending therefrom, and where the "multi-cone" reacting surface is manufactured from a suitable material having a particular affinity for deuterium ions to preload themselves thereon and between the lattice interstices thereof."

For the above stated reasons, the petition is **GRANTED**.

The examiner is directed (1) to make an interference search for possible interfering applications; (2) to promptly examine this application out of turn; and (3) if any interfering application is discovered, to examine such application simultaneously and state in the first official letter of such application that it is being taken out of turn because of a possible interference.

Petitioner is advised that this application will continue to be special, throughout its entire prosecution and pendency, including interference and appeal, if any, only if petitioner makes a prompt *bona fide* effort, in response to each Office action, to place the application in condition for allowance, even if it is necessary to conduct an interview with the examiner to accomplish this purpose.

Kenneth J. Dorner
Special Programs Examiner
Technology Center 3600
(703) 308-0866

KJD/rwg: 8/26/04

UNITED STATES PATENT AND TRADEMARK OFFICE

Commissioner for Patents
United States Patent and Trademark Office
P.O. Box 1450
Alexandria, VA 22313-1450
www.uspto.gov

JONES DAY
222 EAST 41ST ST
NEW YORK NY 10017

MAILED

AUG 28 2009

OFFICE OF PETITIONS

In re Application of :
Storer, et al. :
Application No. 10/735,408 : ON APPLICATION FOR
Filed: December 12, 2003 : PATENT TERM ADJUSTMENT
Atty Docket No. 11874-027-999 :

This is in response to the APPLICATION FOR RECONSIDERATION OF DETERMINATION OF PATENT TERM ADJUSTMENT UNDER 37 C.F.R. § 1.705(b), filed July 14, 2009. Applicants submit that the correct patent term adjustment to be indicated on the patent is four hundred ten (410) days, not eighty-nine (89) days as calculated by the Office as of the mailing of the initial determination of patent term adjustment. Applicants request this correction solely on the basis that the Office will take in excess of three years to issue this patent.

As the instant application for patent term adjustment requests reconsideration of the patent term adjustment as it relates to the Office's failure to issue the patent within 3 years of the filing date, the application for patent term adjustment under 37 CFR 1.705(b) is **DISMISSED as PREMATURE**.

Knowledge of the actual date the patent issues is required to calculate the amount, if any, of additional patent term patentees are entitled to for Office failure to issue the patent within 3 years. See § 1.702(b). This is true even in this instance where a request for continued examination (RCE) was filed. The computer will not undertake the § 1.702(b) calculation until the actual date of issuance of the patent has been determined. Likewise, the computer will not calculate any further Office delay under § 1.702(a)(4) or applicant delay under § 1.704(c)(10) until the actual date of issuance of the patent has been determined. As such, the Office can not make a determination on the correctness of the patent term adjustment until the patent has issued.

Requesting reconsideration of the patent term adjustment to be indicated on the patent under 37 CFR 1.705(b) based on the initial determination of patent term adjustment and a projected issuance date of the patent or even the filing date of the request for continued examination is premature. Accordingly, it is appropriate to dismiss as premature such a request.

Rather than file an application for patent term adjustment under 37 CFR 1.705(b) contesting the 37 CFR 1.702(b) calculation at the time of the mailing of the notice of allowance, applicants are advised that they may wait until the time of the issuance of the patent and file a request for reconsideration of the patent term adjustment pursuant to 37 CFR 1.705(d). As the USPTO does not calculate the amount of time earned pursuant to 37 CFR 1.702(b) until the time of the issuance of the patent, the Office will consider any request for reconsideration of the patent term adjustment due to an error in the calculation of 37 CFR 1.702(b) to be timely if the request for reconsideration is filed within two months of the issuance of the patent. However, as to all other bases for contesting the initial determination of patent term adjustment received with the notice of allowance, applicants must timely file an application for patent term adjustment prior to the payment of the issue fee[1].

The Office acknowledges submission of the $200.00 fee set forth in 37 CFR 1.18(e) for consideration of the application for patent term adjustment under 37 CFR 1.705(b).

Any request for reconsideration of the patent term adjustment indicated on the patent must be timely filed within 2 months after issuance pursuant to 37 CFR 1.705(d) and must include payment of the required fee under 37 CFR 1.18(e).

The Office of Data Management has been advised of this decision. This application is being referred to the Office of Data Management for issuance of the patent.

---

[1] For example, if applicant disputes both the calculation of patent term adjustment under 37 CFR 1.702(a)(1) for Office failure to mail a first Office action or notice of allowance not later than fourteen months after the date on which the application was filed and under 37 CFR 1.702(b) for Office failure to issue a patent within three years of the actual filing date of the application, then applicant must still timely file an application for patent term adjustment prior to the payment of the issue fee to contest the calculation of Office delay in issuing a first Office action or notice of allowance. See 37 CFR 1.705(b) and 35 U.S.C. 154(b)(3)(B). A dispute as to the calculation of the §1.702(a)(1) period raised on request for reconsideration of patent term adjustment under 37 CFR 1.705(d) will be dismissed as untimely filed.

Telephone inquiries specific to this decision should be directed to Senior Petitions Attorney Shirene Willis Brantley at (571) 272-3230.

Nancy Johnson
Senior Petitions Attorney
Office of Petitions

UNITED STATES PATENT AND TRADEMARK OFFICE

UNITED STATES DEPARTMENT OF COMMERCE
United States Patent and Trademark Office
Address: COMMISSIONER FOR PATENTS
P.O. Box 1450
Alexandria, Virginia 22313-1450
www.uspto.gov

JONES DAY
222 EAST 41ST ST
NEW YORK, NY 10017

Mail Date: 04/21/2010

Applicant	: Richard Storer	: DECISION ON REQUEST FOR
Patent Number	: 7598373	: RECALCULATION of PATENT
Issue Date	: 10/06/2009	: TERM ADJUSTMENT IN VIEW
Appliction No	: 10/735,408	: OF WYETH AND NOTICE OF INTENT TO
Filed	: 12/12/2003	: ISSUE CERTIFICATE OF CORRECTION
		:

The Request for Recalculation is **GRANTED** to the extent indicated.

The patent term adjustment has been determined to be **409** days. The USPTO will *sua sponte* issue a certificate of correction reflecting the amount of PTA days determined by the recalculation.

Prior to the issuance of the certificate of correction, the USPTO will afford patentee an opportunity to be heard and request reconsideration. Accordingly, patentee has **one month or thirty (30) days,** whichever is longer, to file a request for reconsideration of this patent term adjustment calculation. See 35 U.S.C. 154(b)(3)(B)(ii) and 37 CFR 1.322(a)(4). No extensions of time will be granted under 37 CFR 1.136.

Patentee should use document code PET.OP if electronically filing a request for reconsideration of this patent term adjustment calculation. The patentee must also include the information required by 37 CFR 1.705(b)(2) and the fee required by 37 CFR 1.18(e). If patentee does not file a timely request for reconsideration of this patent term adjustment calculation including the information required by 37 CFR 1.705(b)(2) and the fee required by 37 CFR 1.18(e), the USPTO will issue a certificate of correction reflecting the PTA determination noted above.

Patentee should be aware that in order to preserve the right to review in the United States District Court for the District of Columbia of the USPTO patent term adjustment determination, patentee must ensure that he or she also take the steps required under 35 U.S.C. 154(b)(4)(A) in a timely manner. Nothing in the request for recalculation should be construed as providing an alternative time frame for commencing a civil action under 35 U.S.C. 154(b)(4)(A).

Any questions concerning this decision should be directed to the Office of Patent Legal Administration at 571-272-7702.

UNITED STATES PATENT AND TRADEMARK OFFICE

Commissioner for Patents
United States Patent and Trademark Office
P.O. Box 1450
Alexandria, VA 22313-1450
www.uspto.gov

TOWNSEND AND TOWNSEND AND CREW, LLP
TWO EMBARCADERO CENTER
EIGHTH FLOOR
SAN FRANCISCO, CA 94111-3834

COPY MAILED

SEP 10 2004

OFFICE OF PETITIONS

In re Application of :
Michel Gilbert :
Application No. 10/735,419 : NOTICE
Filed: December 11, 2003 :
Attorney Docket No. 019633-000118US :

This is a notice regarding your request for acceptance of a fee deficiency submission under 37 CFR 1.28. On September 1, 1998, the Court of Appeals for the Federal Circuit held that 37 CFR 1.28(c) is the sole provision governing the time for correction of the erroneous payment of the issue fee as a small entity. **See DH Technology v. Synergystex International, Inc. 154 F.3d 1333, 47 USPQ2d 1865 (Fed. Cir. Sept. 1, 1998).**

The Office no longer investigates or rejects original or reissue applications under 37 CFR 1.56. **1098 Off. Gaz. Pat. Office 502 (January 3, 1989)**. Therefore, nothing in this Notice is intended to imply that an investigation was done.

Your fee deficiency submission under 37 CFR 1.28 is hereby **ACCEPTED**.

This file is being referred to Technology Center Art Unit 1652 for further processing.

Inquiries related to this communication should be directed to the undersigned at (703) 308-6711.

Andrea Smith
Petitions Examiner
Office of Petitions
Office of the Deputy Commissioner
for Patent Examination Policy

UNITED STATES PATENT AND TRADEMARK OFFICE

COMMISSIONER FOR PATENTS
UNITED STATES PATENT AND TRADEMARK OFFICE
P.O. BOX 1450
ALEXANDRIA, VA 22313-1450
www.uspto.gov

CHEVRON TEXACO CORPORATION
P.O. BOX 6006
SAN RAMON CA 94583-0806

COPY MAILED

DEC 20 2005

OFFICE OF PETITIONS

In re Application of :
Stephen E. Henderson, et al. :
Application No. 10/735,431 : DECISION GRANTING PETITION
Filed: December 11, 2003 :
Atty Docket No. T-6260 :

This is a decision on the petition filed April 16, 2004, requesting that the above-identified application be accorded a filing date of December 11, 2003, instead of the presently accorded date of December 12, 2003.

Petitioners allege that the application was deposited in "Express Mail" Service with the U. S. Postal Service (USPS) on December 11, 2003. In support, petitioners provide, *inter alia*, a copy of the "Express Mail" mailing label receipt No. EV 292286965 US, showing a "Date-In" of "12 11 03". The same Express Mail receipt number was referred to in the original application transmittal letter found in the file.

The Office considers the date the paper or fee is shown to have been deposited as "Express Mail" to be the "Date In" on the Express Mail label, MPEP 513. That is the date that verifies that the package was actually mailed. The evidence is convincing that the application was deposited as "Express Mail" with the USPS on December 11, 2003.

The petition is granted.

The application is being referred to the Office of Initial Patent Examination (OIPE) for correction of the filing date to **December 11 2003.**

Telephone inquires related to this decision should be directed to the undersigned at (571) 272-3204. Telephone inquiries related to OIPE processing should be directed to their hotline at (571) 272-4000.

Sherry D. Brinkley
Petitions Examiner
Office of Petitions

UNITED STATES PATENT AND TRADEMARK OFFICE

COMMISSIONER FOR PATENTS
UNITED STATES PATENT AND TRADEMARK OFFICE
P.O. BOX 1450
ALEXANDRIA, VA 22313-1450
www.uspto.gov

COPY MAILED

AUG 28 2007

OFFICE OF PETITIONS

CHEVRON CORPORATION
P.O. BOX 6006
SAN RAMON, CA 94583-0806

In re Application of
Stephen E. Henderson, et al.
Application No. 10/735,431
Filed: December 11, 2003
Attorney Docket No. T-6260

ON PETITION

This is a decision in response to the petition, filed May 1, 2007, to revive the above-identified application under the provisions of 37 CFR 1.137(b).

The petition is **GRANTED**.

The application became abandoned for a failure to reply in a timely manner to a non-final Office action mailed August 4, 2006. This decision precedes the mailing of a Notice of Abandonment. On May 1, 2007, the present petition was filed.

An extension of time under 37 CFR 1.136 must be filed prior to the expiration of the maximum extendable period for reply. *See* In re Application of S., 8 USPQ2d 1630, 1631 (Comm'r Pats. 1988). Since the $1,020 extension of time fee submitted with the petition on March 16, 2007 was subsequent to the maximum extendable period for reply, this fee is unnecessary and will be credited to petitioner's deposit account.

The petition satisfies the conditions for revival pursuant to the provisions of 37 CFR 1.137(b) in that petitioner has supplied (1) the reply in the form of an amendment; (2) the petition fee of $1,500; and (3) an adequate statement of unintentional delay.

The application is being referred to Technology Center AU 1764 for consideration of the amendment filed May 1, 2007.

Telephone inquiries concerning this decision should be directed to the undersigned at (571) 272-3204. Inquiries relating to further prosecution should be directed to the Technology Center.

Sherry D. Brinkley
Petitions Examiner
Office of Petitions

UNITED STATES PATENT AND TRADEMARK OFFICE

Commissioner for Patents
United States Patent and Trademark Office
P.O. Box 1450
Alexandria, VA 22313-1450
www.uspto.gov

THOMAS R. BERTHOLD
18938 CONGRESS JUNCTION COURT
SARATOGA CA 95070

COPY MAILED

NOV 09 2009

OFFICE OF PETITIONS

In re Patent No. 6,925,000 :
Issue Date: August 2, 2005 :
Application No. 10/735,436 : ON PETITION
Filed: December 12, 2003 :
Attorney Docket No. MGLB-001US1 :

This is a decision on the petition under 37 CFR 1.378(c), filed September 8, 2009, to accept the unintentionally delayed payment of a maintenance fee for the above-identified patent.

The petition is **GRANTED**.

This patent expired at midnight August 2, 2009, for failure to pay the 3½ year maintenance fee. Since this petition was submitted within twenty-four months after the six-month grace period provided in 37 CFR 1.362(e), the petition was timely filed under the provisions of 37 CFR 1.378(c).

The maintenance fee is hereby accepted and the above-identified patent is reinstated as of the mail date of this decision.

The file does not indicate a change of address has been submitted, although the address given on the petition differs from the address of record. If appropriate, a change of address should be filed in accordance with MPEP 601.03. A courtesy copy of this decision is being mailed to the address given on the petition; however, the Office will mail all future correspondence solely to the address of record.

Telephone inquiries concerning this decision should be directed to JoAnne Burke at (571) 272-4584.

Ramesh Krishnamurthy
Petitions Examiner
Office of Petitions

cc: Heinrich Sussner
Maglabs, Inc.
P.O. Box 2362
Saratoga, CA 95070

UNITED STATES PATENT AND TRADEMARK OFFICE

Commissioner for Patents
United States Patent and Trademark Office
P.O. Box 1450
Alexandria, VA 22313-1450
www.uspto.gov

DUANE MORRIS, LLP
IP DEPARTMENT
30 SOUTH 17TH STREET
PHILADELPHIA, PA 19103-4196

COPY MAILED

AUG 06 2008

OFFICE OF PETITIONS

In re Application of :
Kollmann et al. :
Application No. 10/735,440 : ON PETITION
Filed: December 12, 2003 :
Attorney Docket No. 3201-366 (D4700-00380) :

This is a decision on the petition under the unintentional provisions of 37 CFR 1.137(b), filed June 19, 2008, to revive the above-identified application.

The petition is **GRANTED**.

The application became abandoned for failure to timely file a reply within the meaning of 37 CFR 1.113 to the Final Rejection of January 31, 2008. The proposed reply required for consideration of a petition to revive must be a Notice of Appeal (and appeal fee required by 37 CFR 41.20(b)(2), an amendment that *prima facie* places the application in condition for allowance, a Request for Continued Examination and submission (37 CFR 1.114), or the filing of a continuing application under 37 CFR 1.53(b). See MPEP 711.03(c)(III)(A)(2). No extensions of time pursuant to the provisions of 37 CFR 1.136(a) were obtained. Accordingly, the date of abandonment of this application is May 1, 2008.

The petition satisfies the requirements of 37 CFR 1.137(b) in that petitioner has supplied (1) the reply in the form of a Request for Continued Examination (RCE) and fee of $810, and the submission required by 37 CFR 1.114; (2) the petition fee of $1540; and (3) a proper statement of unintentional delay.

Telephone inquiries concerning this decision should be directed to Denise Williams at (571) 272-8930.

This application is being referred to Technology Center AU 3751 for processing of the RCE and for appropriate action by the Examiner in the normal course of business on the amendment submitted in accordance with 37 CFR 1.114.

Andrea Smith
Petitions Examiner
Office of Petitions

UNITED STATES PATENT AND TRADEMARK OFFICE

Commissioner for Patents
United States Patent and Trademark Office
P.O. Box 1450
Alexandria, VA 22313-1450
www.uspto.gov

JOSEPH J. BANGO JR.
CONNECTICUT ANALYTICAL CORP.
696 AMITY ROAD
BETHANY, CT 06524

COPY MAILED

DEC 15 2004

OFFICE OF PETITIONS

In re Application of :
Randall Fuerst et al :
Application No. 10/735,451 : ON PETITION
Filed: December 12, 2003 :
Attorney Docket No. :

This is a decision on the petition under 37 CFR 1.137(b), filed October 22, 2004, to revive the above-identified application.

The petition is **GRANTED**.

The above-identified application became abandoned for failure to reply in a timely manner to the Notice to File Missing Parts of Nonprovisional Application (Notice) mailed March 24, 2004. The Notice set a period for reply of two (2) months from the mail date of the Notice. Four months extension of time under the provisions of 37 CFR 1.136(a) were obtained. Accordingly, the above-identified application became abandoned on September 25, 2004.

Telephone inquiries concerning this decision should be directed to Irvin Dingle at (571) 272-3210.

This file is being forwarded to the Initial Patent Examination Unit.

Irvin Dingle
Petitions Examiner
Office of Petitions
Office of the Deputy Commissioner
for Patent Examination Policy

UNITED STATES PATENT AND TRADEMARK OFFICE

Commissioner for Patents
United States Patent and Trademark Office
P.O. Box 1450
Alexandria, VA 22313-1450
www.uspto.gov

BRADLEY ARANT ROSE & WHITE
200 CLINTON AVE., WEST
SUITE 900
HUNTSVILLE, AL 35801

COPY MAILED

FEB 14 2005

OFFICE OF PETITIONS

In re Application of	:	
Giovanni Barbanti	:	
Application No. 10/735,466	:	ON PETITION
Filed: December 12, 2003	:	
Attorney Docket No. S2205-72132	:	

This is a decision on the petition under 37 CFR 1.137(b), filed January 31, 2005, to revive the above-identified application.

The petition is **GRANTED**.

The above-identified application became abandoned for failure to reply in a timely manner to the Notice to File Missing Parts of Nonprovisional Application (Notice) mailed March 24, 2004. The Notice set a period for reply of two (2) months from the mail date of the Notice. No extensions of time under the provisions of 37 CFR 1.136(a) were obtained. Accordingly, the above-identified application became abandoned on May 25, 2004.

Telephone inquiries concerning this decision should be directed to Wan Laymon at (571) 272-3220.

This matter is being referred to the Office of Initial Patent Examination for preexamination processing.

Wan Laymon
Petitions Examiner
Office of Petitions
Office of the Deputy Commissioner
for Patent Examination Policy

UNITED STATES PATENT AND TRADEMARK OFFICE

Commissioner for Patents
United States Patent and Trademark Office
P.O. Box 1450
Alexandria, VA 22313-1450
www.uspto.gov

COPY MAILED

JUL 02 2007

OFFICE OF PETITIONS

Bradley Arrant Rose & White LLP
200 Clinton Ave. West
Suite 900
Huntsville, AL 35801

In re Application of :

Giovanni Barbanti :
Application No. 10/735,466 : DECISION ON PETITION
Filed: December 12, 2003 : TO WITHDRAW
Attorney Docket No. S2205-72132 : FROM RECORD
:

This is a decision on the Request to Withdraw as attorney or agent of record under 37 C.F.R. § 1.36(b), filed December 19, 2006.

The request is **APPROVED**.

A grantable request to withdraw as attorney/agent of record must be signed by every attorney/agent seeking to withdraw or contain a clear indication that one attorney is signing on behalf of another/others. A request to withdraw will not be approved unless at least 30 (thirty) days would remain between the date of approval and the later of the expiration date of a time to file a response or the expiration date of the maximum time period which can be extended under 37 C.F.R. § 1.136(a).

The request was signed by David Mixon behalf of all attorneys of record.

All attorneys/agents have been withdrawn.

Applicant is reminded that there is no attorney of record at this time.

The correspondence address of record has been changed and the new correspondence address is the address indicated below.

The application became abandoned for failure to timely respond to the Office action mailed December 13, 2006.

Telephone inquiries concerning this decision should be directed to Terri Williams at 571-272-2991.

J. Williams

Terri Williams
Petitions Examiner
Office of Petitions

cc: **Sr. Carlo Rinaldi**
Studio Brevetti Nazionali ed Esteri
Dell'Ing. Carlo RINALDI & C, South d.F.
Piazza di Porta Castiglione 16
Bologna, Italy 40136

UNITED STATES PATENT AND TRADEMARK OFFICE

Commissioner for Patents
United States Patent and Trademark Office
P.O. Box 1450
Alexandria, VA 22313-1450
www.uspto.gov

BRADLEY ARANT ROSE & WHITE
200 CLINTON AVE., WEST
SUITE 900
HUNTSVILLE, AL 35801

COPY MAILED

FEB 15 2005

OFFICE OF PETITIONS

In re Application of	:	
Giovanni Barbanti	:	
Application No. 10/735,472	:	ON PETITION
Filed: December 12, 2003	:	
Attorney Docket No. S2205-72133	:	

This is a decision on the petition under 37 CFR 1.137(b), filed January 31, 2005, to revive the above-identified application.

The petition is **GRANTED**.

The above-identified application became abandoned for failure to reply in a timely manner to the Notice to File Missing Parts of Nonprovisional Application (Notice) mailed March 24, 2004. The Notice set a period for reply of two (2) months from the mail date of the Notice. No extensions of time under the provisions of 37 CFR 1.136(a) were obtained. Accordingly, the above-identified application became abandoned on May 25, 2004.

Telephone inquiries concerning this decision should be directed to Wan Laymon at (571) 272-3220.

This matter is being referred to the Office of Initial Patent Examination for preexamination processing.

Wan Laymon
Petitions Examiner
Office of Petitions
Office of the Deputy Commissioner
for Patent Examination Policy

UNITED STATES PATENT AND TRADEMARK OFFICE

Commissioner for Patents
United States Patent and Trademark Office
P.O. Box 1450
Alexandria, VA 22313-1450
www.uspto.gov

BRADLEY ARANT ROSE & WHITE
200 CLINTON AVE., WEST
SUITE 900
HUNTSVILLE, AL 35801

COPY MAILED

FEB 14 2005

OFFICE OF PETITIONS

In re Application of	:	
Giovanni Barbanti	:	
Application No. 10/735,473	:	ON PETITION
Filed: December 12, 2003	:	
Attorney Docket No. S2205-72130	:	

This is a decision on the petition under 37 CFR 1.137(b), filed January 31, 2005, to revive the above-identified application.

The petition is **GRANTED**.

The above-identified application became abandoned for failure to reply in a timely manner to the Notice to File Missing Parts of Nonprovisional Application (Notice) mailed March 24, 2004. The Notice set a period for reply of two (2) months from the mail date of the Notice. No extensions of time under the provisions of 37 CFR 1.136(a) were obtained. Accordingly, the above-identified application became abandoned on May 25, 2004.

Telephone inquiries concerning this decision should be directed to Wan Laymon at (571) 272-3220.

This matter is being referred to the Office of Initial Patent Examination for preexamination processing.

Wan Laymon
Petitions Examiner
Office of Petitions
Office of the Deputy Commissioner
for Patent Examination Policy

BEST AVAILABLE COPY

UNITED STATES PATENT AND TRADEMARK OFFICE

Commissioner for Patents
United States Patent and Trademark Office
P.O. Box 1450
Alexandria, VA 22313-1450
www.uspto.gov

Date : December 30, 2006

Patent No. : 7,120,486 B2
Inventor(s) : Leuthardt, et al.
Issued : October 10, 2006
Title : **BRAIN COMPUTER INTERFACE**
Docket No. : 60005161-0061

Re: Request for Certificate of Correction

Consideration has been given your request for the issuance of a certificate of correction for the above-identified patent under the provisions of 37 CFR 1.322 and/or 1.323.

Assignees' names and addresses (assignment data) printed in a patent are based *solely* on information supplied in the appropriate space for identifying the assignment data, i.e., item 3 of the Fee(s) Transmittal Form PTOL-85B. After payment of the issue fee, correction of assignment data submitted on the PTOL-85B can only be done by Certificate of Correction under 37 CFR 1.323, with a request under 37 CFR 3.81(b).

A request for a patent to be corrected to state the name of the assignee must:

A. state that the assignment was submitted for recordation as set forth in 37 CFR 3.11 before issuance of the patent;
B. include a request for a certificate of correction under 37 CFR 1.323 along with the fee set forth in 37 CFR 1.20(a); and
C. include the processing fee set forth in 37 CFR 1.17(i).

If the request is granted, Certificates of Correction Branch will be notified that a Certificate of Correction may be issued.

See Manual of Patent Examining Procedure, Section 1481.01 (Rev. 3) (Oct. 2005).

Applicant has not included items A and or C above, accordingly, the request for Certificate of Correction to add or change the assignee data is denied.

Any request under 37 CFR 3.81(b) should be directed to the following address or facsimile number:

By mail: Mail Stop PETITIONS
Commissioner for Patents
Post Office Box 1450
Alexandria, VA 22313-1450

BEST AVAILABLE COPY

By hand: Customer Service Window
Mail Stop Petitions
Randolph Building
401 Dulany Street
Alexandria, VA 22314

By fax: 571-273-8300
ATTN: Office of Petitions

If a fee (currently $100) was previously submitted for consideration of a Request for Certificate of Correction, under CFR 1.323, to correct assignment data, no additional fee is required.

For Cecelia Newman
Decisions & Certificates
of Correction Branch
(703) 308-9390 or (703) 308-

SONNENSCHEIN NATH & ROSENTHAL LLP
P.O. BOX 061080
WACKER DRIVE STATION, SEARS TOWER
CHICAGO IL 60606-1080

CBN/eme

UNITED STATES PATENT AND TRADEMARK OFFICE

Commissioner for Patents
United States Patent and Trademark Office
P.O. Box 1450
Alexandria, VA 22313-1450
www.uspto.gov

WASHINGTON UNIVERSITY-SNR
C/O SONNENSCHEIN NATH & ROSENTHAL LLP
PO BOX 061080
WACKER DRIVE STATION SEARS TOWER
CHICAGO IL 60606

COPY MAILED

OCT 10 2008

OFFICE OF PETITIONS

In re Patent No. 7,120,486 :
Issue Date: October 10, 2006 :
Application No. 10/735,474 : DECISION ON PETITION
Filed: December 12, 2003 :
Attorney Docket No. 60005161-0061 :

This is a decision on the "PETITION UNDER 37 CFR 1.323", filed November 7, 2007.

The petition is **GRANTED**.

An application may issue in the name of an assignee rather than the applicant if requested prior to issuance of a patent.[1] However, in the event the request is not made prior to issuance, a Certificate of Correction under 37 CFR 1.323 may be requested. A request for a Certificate of Correction under 37 CFR 1.323 to correct the assignee's name will not be granted unless a petition under 37 CFR 3.81(b) is granted. Such request under 37 CFR 3.81(b) should include:

(A) the processing fee required by 37 CFR 1.17(i);

(B) a request for issuance of the application in the name of the assignee, or a request that a patent be corrected to state the name of the assignee;

[1] See 37 CFR 3.81.

(C) a statement that the assignment was submitted for recordation as set forth in 37 CFR 3.11 before issuance of the patent; and

(D) a request for a certificate of correction under 37 CFR 1.323 accompanied by the fee set forth in 37 CFR 1.20(a).[2]

Receipt of the $130 processing fee set forth in 37 CFR 1.17(i) is acknowledged. The $100 fee for the Certificate of Correction has been charged to Deposit Account No. 19-3140, as authorized.

The file is being forwarded to the Certificate of Corrections Branch for issuance of the requested Certificate of Correction.

Telephone inquiries related to this decision should be directed to the undersigned at (571)272-3207.

Cliff Congo
Petitions Attorney
Office of Petitions

[2] MPEP 307.

UNITED STATES PATENT AND TRADEMARK OFFICE

UNITED STATES DEPARTMENT OF COMMERCE
United States Patent and Trademark Office
Address: COMMISSIONER FOR PATENTS
P.O. Box 1450
Alexandria, Virginia 22313-1450
www.uspto.gov

TOWNSEND AND TOWNSEND AND CREW LLP/ORACLE
TWO EMBARCADERO CENTER
8TH FLOOR
SAN FRANCISCO, CA 94111-3834

Mail Date: 04/21/2010

Applicant	: Georg Neumann	: DECISION ON REQUEST FOR
Patent Number	: 7665068	: RECALCULATION of PATENT
Issue Date	: 02/16/2010	: TERM ADJUSTMENT IN VIEW
Appliction No	: 10/735,482	: OF WYETH AND NOTICE OF INTENT TO
Filed	: 12/12/2003	: ISSUE CERTIFICATE OF CORRECTION
		:

The Request for Recalculation is **GRANTED** to the extent indicated.

The patent term adjustment has been determined to be **1219** days. The USPTO will *sua sponte* issue a certificate of correction reflecting the amount of PTA days determined by the recalculation.

Prior to the issuance of the certificate of correction, the USPTO will afford patentee an opportunity to be heard and request reconsideration. Accordingly, patentee has **one month or thirty (30) days**, whichever is longer, to file a request for reconsideration of this patent term adjustment calculation. See 35 U.S.C. 154(b)(3)(B)(ii) and 37 CFR 1.322(a)(4). No extensions of time will be granted under 37 CFR 1.136.

Patentee should use document code PET.OP if electronically filing a request for reconsideration of this patent term adjustment calculation. The patentee must also include the information required by 37 CFR 1.705(b)(2) and the fee required by 37 CFR 1.18(e). If patentee does not file a timely request for reconsideration of this patent term adjustment calculation including the information required by 37 CFR 1.705(b)(2) and the fee required by 37 CFR 1.18(e), the USPTO will issue a certificate of correction reflecting the PTA determination noted above.

Patentee should be aware that in order to preserve the right to review in the United States District Court for the District of Columbia of the USPTO patent term adjustment determination, patentee must ensure that he or she also take the steps required under 35 U.S.C. 154(b)(4)(A) in a timely manner. Nothing in the request for recalculation should be construed as providing an alternative time frame for commencing a civil action under 35 U.S.C. 154(b)(4)(A).

Any questions concerning this decision should be directed to the Office of Patent Legal Administration at 571-272-7702.

UNITED STATES PATENT AND TRADEMARK OFFICE

Commissioner for Patents
United States Patent and Trademark Office
P.O. Box 1450
Alexandria, VA 22313-1450
www.uspto.gov

In re Patent No. 6930319
Issue Date: August 16,2005
Application No. 10735502
Filed: December 12,2003
Attorney Docket No. D-4621 DIV

:
:DECISION GRANTING PETITION
:UNDER 37 CFR 1.378(c)
:

This is a decision on the electronic petition, filed December 23,2009 ,under 37 CFR 1.378(c) to accept the unintentionally delayed payment of the 3.5 year maintenance fee for the above-identified patent.

The petition is **GRANTED**.

The maintenance fee is accepted, and the above-identified patent reinstated as of December 23,2009 . This decision also constitutes notice that the fee has been accepted. An electronic copy of the petition and this decision has been created as an entry in the Image File Wrapper. Nevertheless, petitioner should print and retain an independent copy.

Telephone inquiries related to this electronic decision should be directed to the Electronic Business Center at 1-866-217-9197.

PTO/SB/66 (03-09)
Approved for use through 03/31/2012. OMB 0651-0016
U.S. Patent and Trademark Office: U.S. DEPARTMENT OF COMMERCE
Under the Paperwork Reduction Act of 1995, no persons are required to respond to a collection of information unless it displays valid OMB control number.

PETITION TO ACCEPT UNINTENTIONALLY DELAYED PAYMENT OF MAINTENANCE FEE IN AN EXPIRED PATENT (37 CFR 1.378(c))

Patent Number	Issue Date (YYYY-MM-DD)	Application Number	Filing Date (YYYY-MM-DD)	Docket Number (if applicable)
6930319	2005-08-16	10/735,502	2003-12-12	D-4621 DIV

CAUTION: Maintenance fee (and surcharge, if any) payment must correctly identify: (1) the patent number and (2) the application number of the actual U.S. application leading to issuance of that patent to ensure the fee(s) is/are associated with the correct patent. 37 CFR 1.366(c) and (d).

SMALL ENTITY

☐ Patentee claims, or has previously claimed, small entity status. See 37 CFR 1.27.

LOSS OF ENTITLEMENT TO SMALL ENTITY STATUS

☐ Patentee is no longer entitled to small entity status. See 37 CFR 1.27(g)

NOT Small Entity			Small Entity		
	Fee	Code		Fee	Code
◉	3 ½ year	(1551)	○	3 ½ year	(2551)
○	7 ½ year	(1552)	○	7 ½ year	(2552)
○	11 ½ year	(1553)	○	11 ½ year	(2553)

SURCHARGE

The surcharge required by 37 CFR 1.20(i)(2) (Fee Code 1558) must be paid as a condition of accepting unintentionally delayed payment of the maintenance fee.

MAINTENANCE FEE (37 CFR 1.20(e)-(g))

The appropriate maintenance fee must be submitted with this petition.

STATEMENT

THE UNDERSIGNED CERTIFIES THAT THE DELAY IN PAYMENT OF THE MAINTENANCE FEE TO THIS PATENT WAS UNINTENTIONAL

PETITIONER(S) REQUEST THAT THE DELAYED PAYMENT OF THE MAINTENANCE FEE BE ACCEPTED AND THE PATENT REINSTATED

THIS PORTION MUST BE COMPLETED BY THE SIGNATORY OR SIGNATORIES

37 CFR 1.378(d) states: "Any petition under this section must be signed by an attorney or agent registered to practice before the Patent and Trademark Office, or by the patentee, the assignee, or other party in interest."

I certify, in accordance with 37 CFR 1.4(d)(4) that I am

◉ An attorney or agent registered to practice before the Patent and Trademark Office

○ A sole patentee

○ A joint patentee; I certify that I am authorized to sign this submission on behalf of all the other patentees.

○ A joint patentee; all of whom are signing this e-petition

○ The assignee of record of the entire interest

Patent Practitioner			
A signature of the applicant or representative is required in accordance with 37 CFR 1.33 and 10.18. Please see 37 CFR 1.4(d) for the form of the signature			
Signature	/Daniel J. Long/	Date (YYYY-MM-DD)	2009-12-23
Name	Daniel J. Long	Registration Number	29404

This collection of information is required by 37 CFR 1.378(c). The information is required to obtain or retain a benefit by the public which is to file (and by the USPTO to process) an application. Confidentiality is governed by 35 U.S.C. 122 and 37 CFR 1.11 and 1.14. This collection is estimated to take 1 hour to complete, including gathering, preparing, and submitting the completed application form to the USPTO. Time will vary depending upon the individual case. Any comments on the amount of time you require to complete this form and/ or suggestions for reducing this burden, should be sent to the Chief Information Officer, U.S. Patent and Trademark Office, U.S. Department of Commerce, P.O. Box 1450, Alexandria, VA 22313-1450. DO NOT SEND FEES OR COMPLETED FORMS TO THIS ADDRESS. **This form can only be used when in conjunction with EFS-Web. If this form is mailed to the USPTO, it may cause delays in reinstating the patent.**

Privacy Act Statement

The Privacy Act of 1974 (P.L. 93-579) requires that you be given certain information in connection with your submission of the attached form related to a patent application or patent. Accordingly, pursuant to the requirements of the Act, please be advised that: (1) the general authority for the collection of this information is 35 U.S.C. 2(b)(2); (2) furnishing of the information solicited is voluntary; and (3) the principal purpose for which the information is used by the U.S. Patent and Trademark Office is to process and/or examine your submission related to a patent application or patent. If you do not furnish the requested information, the U.S. Patent and Trademark Office may not be able to process and/or examine your submission, which may result in termination of proceedings or abandonment of the application or expiration of the patent.

The information provided by you in this form will be subject to the following routine uses:

1. The information on this form will be treated confidentially to the extent allowed under the Freedom of Information Act (5 U.S.C. 552) and the Privacy Act (5 U.S.C. 552a). Records from this system of records may be disclosed to the Department of Justice to determine whether the Freedom of Information Act requires disclosure of these records.

2. A record from this system of records may be disclosed, as a routine use, in the course of presenting evidence to a court, magistrate, or administrative tribunal, including disclosures to opposing counsel in the course of settlement negotiations.

3. A record in this system of records may be disclosed, as a routine use, to a Member of Congress submitting a request involving an individual, to whom the record pertains, when the individual has requested assistance from the Member with respect to the subject matter of the record.

4. A record in this system of records may be disclosed, as a routine use, to a contractor of the Agency having need for the information in order to perform a contract. Recipients of information shall be required to comply with the requirements of the Privacy Act of 1974, as amended, pursuant to 5 U.S.C. 552a(m).

5. A record related to an International Application filed under the Patent Cooperation Treaty in this system of records may be disclosed, as a routine use, to the International Bureau of the World Intellectual Property Organization, pursuant to the Patent Cooperation Treaty.

6. A record in this system of records may be disclosed, as a routine use, to another federal agency for purposes of National Security review (35 U.S.C. 181) and for review pursuant to the Atomic Energy Act (42 U.S.C. 218(c)).

7. A record from this system of records may be disclosed, as a routine use, to the Administrator, General Services, or his/her designee, during an inspection of records conducted by GSA as part of that agency's responsibility to recommend improvements in records management practices and programs, under authority of 44 U.S.C. 2904 and 2906. Such disclosure shall be made in accordance with the GSA regulations governing inspection of records for this purpose, and any other relevant (i.e., GSA or Commerce) directive. Such disclosure shall not be used to make determinations about individuals.

8. A record from this system of records may be disclosed, as a routine use, to the public after either publication of the application pursuant to 35 U.S.C. 122(b) or issuance of a patent pursuant to 35 U.S.C. 151. Further, a record may be disclosed, subject to the limitations of 37 CFR 1.14, as a routine use, to the public if the record was filed in an application which became abandoned or in which the proceedings were terminated and which application is referenced by either a published application, an application open to public inspections or an issued patent.

9. A record from this system of records may be disclosed, as a routine use, to a Federal, State, or local law enforcement agency, if the USPTO becomes aware of a violation or potential violation of law or regulation.

UNITED STATES PATENT AND TRADEMARK OFFICE

Commissioner for Patents
United States Patent and Trademark Office
P.O. Box 1450
Alexandria, VA 22313-1450
www.uspto.gov

BRENT T. WINDER
JONES WALDO HOLBROOK & MCDONOUGH
SUITE 1500
170 SOUTH MAIN STREET
SALT LAKE CITY UT 84101-1644

COPY MAILED

OCT 1 2 2004

OFFICE OF PETITIONS

In re Application of :
Duane Hill et al. :
Application No. 10/735,528 : DECISION ACCORDING STATUS
Filed: December 12, 2003 : UNDER 37 CFR 1.47(a)
Attorney Docket No. 12710.0017 :

This is in response to the petition filed August 30, 2004 under 37 CFR 1.47(a).

The petition is **GRANTED**.

The above-identified application was filed on December 12, 2003, naming Duane Hill, Ray Walker, Dan Breene, Jack Sanders-Reed and Bob Van Allen as joint inventors but without a signed declaration. Accordingly, on March 25, 2004, a "Notice To File Missing Parts of Application" was mailed, requiring *inter alia* a properly executed oath or declaration.

In response, on August 30, 2004, an oath or declaration executed by joint inventors Hill, Walker and Breene and a petition under 37 CFR 1.47(a) was filed. The petition argues that joint inventors Sanders-Reed and Van Allen refuse to sign the oath or declaration and thus by their actions, to cooperate with the filing of the instant application.

A grantable petition under 37 CFR 1.47(a) requires: (1) proof that the non-signing inventor cannot be reached or refuses to sign the oath or declaration after having been presented with the application papers (specification, claims and drawings); (2) an acceptable oath or declaration in compliance with 35 U.S.C. §§ 115 and 116; (3) the petition fee; and (4) a statement of the last known address of the non-signing inventor.

The petition bears proof that the application papers were sent to both Mr. Sanders-Reed and Mr. Van Allen and that neither has returned an executed oath or declaration. Further, the petitioners have shown that they have followed up with each of the non-signing inventors and that again, even in spite of messages from Mr. Sanders-Reed and Mr. Van Allen indicating their intentions to execute and return the documents, they have failed to do so.

The above-identified application and papers have been reviewed and found in compliance with 37 CFR 1.47(a). In view thereof, this application is hereby accorded Rule 1.47(a) status.

Thus, as provided in Rule 1.47c, this Office will forward notice of this application's filing to the non-signing inventor at the address given in the petition. Notice of the filing of this application will also be published in the Official Gazette.

The application is being forwarded to Technology Center 3661 for examination in due course.

Telephone inquiries concerning this matter may be directed to the undersigned Petitions Attorney at (571) 272-3212.

Patricia Faison-Ball
Senior Petitions Attorney
Office of Petitions

UNITED STATES PATENT AND TRADEMARK OFFICE

Commissioner for Patents
United States Patent and Trademark Office
P.O. Box 1450
Alexandria, VA 22313-1450
www.uspto.gov

JACK SANDERS-REED
BOEING-SVS, INC.
4411 THE 25 WAY, NE, SUITE 350
ALBUQUERQUE, NM 87109

BOB VAN ALLEN
BOEING-SVS, INC.
4411 THE 25 WAY, NE, SUITE 350
ALBUQUERQUE, NM 87109

COPY MAILED

OCT 12 2004

OFFICE OF PETITIONS

In re Application of
Duane Hill et al.
Application No. 10/735.528
Filed: December 12, 2003
For: Vehicle Mounted System and Method for Capturing and Processing Physical Data

Dear Mr. Sanders-Reed and Mr. Van Allen:

You are named as joint inventors in the above identified United States patent application, filed under the provisions of 35 U.S.C. 116 (United States Code), and 37 CFR 1.47(a), Rules of Practice in Patent Cases. Should a patent be granted on the application you will be designated therein as joint inventors.

As named inventors you are entitled to inspect any paper in the file wrapper of the application, order copies of all or any part thereof (at a prepaid cost per 37 CFR 1.19) or make your position of record in the application. Alternatively, you may arrange to do any of the preceding through a registered patent attorney or agent presenting written authorization from you. If you care to join the application, counsel of record (see below) would presumably assist you. Joining in the application would entail the filing of an appropriate oath or declaration by you pursuant to 37 CFR 1.63.

Telephone inquiries regarding this communication should be directed to the undersigned Petitions Attorney at (571) 272-3212. Requests for information regarding your application should be directed to the File Information Unit at 703/308-2733. Information regarding how to pay for and order a copy of the application, or a specific paper in the application, should be directed to Certification Division at 703/308-9726 or 1-800-972-6382 (outside the Washington D.C. area).

Patricia Faison-Ball
Senior Petitions Attorney
Office of Petitions

cc:
BRENT T. WINDER
JONES WALDO HOLBROOK & MCDONOUGH
SUITE 1500
170 SOUTH MAIN STREET
SALT LAKE CITY UT 84101-1644

SPE RESPONSE FOR CERTIFICATE OF CORRECTION

Paper No.: _____

DATE : 10/04/06

TO SPE OF : ART UNIT 3632

SUBJECT : Request for Certificate of Correction for Appl. No.: **10735529** Patent No.: **6948591**

Please respond to this request for a certificate of correction within 7 days.

Please review the requested changes/corrections as shown in the **COCIN** document(s) in the IFW application image. No new matter should be introduced, nor should the scope or meaning of the claims be changed.

Please complete the response (see below) and forward the completed response to scanning using document code **COCX**.

Angela Green
Certificates of Correction Branch
703.308.9380 ext. 123

Thank You For Your Assistance

The request for issuing the above-identified correction(s) is hereby:
Note your decision on the appropriate box.

- ☑ **Approved** — All changes apply.
- ☐ **Approved in Part** — Specify below which changes **do not** apply.
- ☐ **Denied** — State the reasons for denial below.

Comments: _____

Cari D. Friedman
Supervisory Patent Examiner
Group 3600

SPE 3632 **Art Unit**

PTO/SB/66 (03-09)
Approved for use through 03/31/2012. OMB 0651-0016
U.S. Patent and Trademark Office: U.S. DEPARTMENT OF COMMERCE
Under the Paperwork Reduction Act of 1995, no persons are required to respond to a collection of information unless it displays valid OMB control number.

PETITION TO ACCEPT UNINTENTIONALLY DELAYED PAYMENT OF MAINTENANCE FEE IN AN EXPIRED PATENT (37 CFR 1.378(c))

Patent Number	Issue Date (YYYY-MM-DD)	Application Number	Filing Date (YYYY-MM-DD)	Docket Number (if applicable)
6948591	2005-09-27	10735529	2003-12-12	13869.40

CAUTION: Maintenance fee (and surcharge, if any) payment must correctly identify: (1) the patent number and (2) the application number of the actual U.S. application leading to issuance of that patent to ensure the fee(s) is/are associated with the correct patent. 37 CFR 1.366(c) and (d).

SMALL ENTITY

☒ Patentee claims, or has previously claimed, small entity status. See 37 CFR 1.27.

LOSS OF ENTITLEMENT TO SMALL ENTITY STATUS

☐ Patentee is no longer entitled to small entity status. See 37 CFR 1.27(g)

NOT Small Entity			Small Entity		
	Fee	Code		Fee	Code
◯	3 ½ year	(1551)	◉	3 ½ year	(2551)
◯	7 ½ year	(1552)	◯	7 ½ year	(2552)
◯	11 ½ year	(1553)	◯	11 ½ year	(2553)

SURCHARGE

The surcharge required by 37 CFR 1.20(i)(2) (Fee Code 1558) must be paid as a condition of accepting unintentionally delayed payment of the maintenance fee.

MAINTENANCE FEE (37 CFR 1.20(e)-(g))

The appropriate maintenance fee must be submitted with this petition.

STATEMENT

THE UNDERSIGNED CERTIFIES THAT THE DELAY IN PAYMENT OF THE MAINTENANCE FEE TO THIS PATENT WAS UNINTENTIONAL

PETITIONER(S) REQUEST THAT THE DELAYED PAYMENT OF THE MAINTENANCE FEE BE ACCEPTED AND THE PATENT REINSTATED

THIS PORTION MUST BE COMPLETED BY THE SIGNATORY OR SIGNATORIES

37 CFR 1.378(d) states: "Any petition under this section must be signed by an attorney or agent registered to practice before the Patent and Trademark Office, or by the patentee, the assignee, or other party in interest."

I certify, in accordance with 37 CFR 1.4(d)(4) that I am

◯ An attorney or agent registered to practice before the Patent and Trademark Office

◯ A sole patentee

◯ A joint patentee; I certify that I am authorized to sign this submission on behalf of all the other patentees.

◯ A joint patentee; all of whom are signing this e-petition

◯ The assignee of record of the entire interest

Patent Practitioner			
A signature of the applicant or representative is required in accordance with 37 CFR 1.33 and 10.18. Please see 37 CFR 1.4(d) for the form of the signature			
Signature	/Dana L. Tangren/	Date (YYYY-MM-DD)	2009-11-11
Name	DANA L. TANGREN (Attorney of Record)	Registration Number	37246

This collection of information is required by 37 CFR 1.378(c). The information is required to obtain or retain a benefit by the public which is to file (and by the USPTO to process) an application. Confidentiality is governed by 35 U.S.C. 122 and 37 CFR 1.11 and 1.14. This collection is estimated to take 1 hour to complete, including gathering, preparing, and submitting the completed application form to the USPTO. Time will vary depending upon the individual case. Any comments on the amount of time you require to complete this form and/ or suggestions for reducing this burden, should be sent to the Chief Information Officer, U.S. Patent and Trademark Office, U.S. Department of Commerce, P.O. Box 1450, Alexandria, VA 22313-1450. DO NOT SEND FEES OR COMPLETED FORMS TO THIS ADDRESS. **This form can only be used when in conjunction with EFS-Web. If this form is mailed to the USPTO, it may cause delays in reinstating the patent.**

Privacy Act Statement

The Privacy Act of 1974 (P.L. 93-579) requires that you be given certain information in connection with your submission of the attached form related to a patent application or patent. Accordingly, pursuant to the requirements of the Act, please be advised that: (1) the general authority for the collection of this information is 35 U.S.C. 2(b)(2); (2) furnishing of the information solicited is voluntary; and (3) the principal purpose for which the information is used by the U.S. Patent and Trademark Office is to process and/or examine your submission related to a patent application or patent. If you do not furnish the requested information, the U.S. Patent and Trademark Office may not be able to process and/or examine your submission, which may result in termination of proceedings or abandonment of the application or expiration of the patent.

The information provided by you in this form will be subject to the following routine uses:

1. The information on this form will be treated confidentially to the extent allowed under the Freedom of Information Act (5 U.S.C. 552) and the Privacy Act (5 U.S.C. 552a). Records from this system of records may be disclosed to the Department of Justice to determine whether the Freedom of Information Act requires disclosure of these records.

2. A record from this system of records may be disclosed, as a routine use, in the course of presenting evidence to a court, magistrate, or administrative tribunal, including disclosures to opposing counsel in the course of settlement negotiations.

3. A record in this system of records may be disclosed, as a routine use, to a Member of Congress submitting a request involving an individual, to whom the record pertains, when the individual has requested assistance from the Member with respect to the subject matter of the record.

4. A record in this system of records may be disclosed, as a routine use, to a contractor of the Agency having need for the information in order to perform a contract. Recipients of information shall be required to comply with the requirements of the Privacy Act of 1974, as amended, pursuant to 5 U.S.C. 552a(m).

5. A record related to an International Application filed under the Patent Cooperation Treaty in this system of records may be disclosed, as a routine use, to the International Bureau of the World Intellectual Property Organization, pursuant to the Patent Cooperation Treaty.

6. A record in this system of records may be disclosed, as a routine use, to another federal agency for purposes of National Security review (35 U.S.C. 181) and for review pursuant to the Atomic Energy Act (42 U.S.C. 218(c)).

7. A record from this system of records may be disclosed, as a routine use, to the Administrator, General Services, or his/her designee, during an inspection of records conducted by GSA as part of that agency's responsibility to recommend improvements in records management practices and programs, under authority of 44 U.S.C. 2904 and 2906. Such disclosure shall be made in accordance with the GSA regulations governing inspection of records for this purpose, and any other relevant (i.e., GSA or Commerce) directive. Such disclosure shall not be used to make determinations about individuals.

8. A record from this system of records may be disclosed, as a routine use, to the public after either publication of the application pursuant to 35 U.S.C. 122(b) or issuance of a patent pursuant to 35 U.S.C. 151. Further, a record may be disclosed, subject to the limitations of 37 CFR 1.14, as a routine use, to the public if the record was filed in an application which became abandoned or in which the proceedings were terminated and which application is referenced by either a published application, an application open to public inspections or an issued patent.

9. A record from this system of records may be disclosed, as a routine use, to a Federal, State, or local law enforcement agency, if the USPTO becomes aware of a violation or potential violation of law or regulation.

UNITED STATES PATENT AND TRADEMARK OFFICE

Commissioner for Patents
United States Patent and Trademark Office
P.O. Box 1450
Alexandria, VA 22313-1450
www.uspto.gov

In re Patent No. 6948591
Issue Date: September 27,2005
Application No. 10735529
Filed: December 12,2003
Attorney Docket No. 13869.40

:
:DECISION GRANTING PETITION
:UNDER 37 CFR 1.378(c)
:

This is a decision on the electronic petition, filed November 11,2009 ,under 37 CFR 1.378(c) to accept the unintentionally delayed payment of the 3.5 year maintenance fee for the above-identified patent.

The petition is **GRANTED**.

The maintenance fee is accepted, and the above-identified patent reinstated as of November 11,2009 . This decision also constitutes notice that the fee has been accepted. An electronic copy of the petition and this decision has been created as an entry in the Image File Wrapper. Nevertheless, petitioner should print and retain an independent copy.

Telephone inquiries related to this electronic decision should be directed to the Electronic Business Center at 1-866-217-9197.

UNITED STATES PATENT AND TRADEMARK OFFICE

Commissioner for Patents
United States Patent and Trademark Office
P.O. Box 1450
Alexandria, VA 22313-1450
www.uspto.gov

COPY MAILED

FEB 0 3 2009

OFFICE OF PETITIONS

PHILIP S. JOHNSON
JOHNSON & JOHNSON
ONE JOHNSON & JOHNSON PLAZA
NEW BRUNSWICK NJ 08933-7003

In re Application of
Connie Baozhen Lin
Application No. 10/735,540
Filed: December 12, 2003
Attorney Docket No. 10/735,540

ON PETITION

This is a decision on the petition under the unintentional provisions of 37 CFR 1.137(b), filed December 18, 2008, to revive the above-identified application.

The petition is **DISMISSED**.

Any request for reconsideration of this decision must be submitted within TWO (2) MONTHS from the mail date of this decision. Extensions of time under 37 CFR 1.136(a) are permitted. The reconsideration request should include a cover letter entitled "Renewed Petition under 37 CFR 1.137(b)." This is **not** a final agency action within the meaning of 5 U.S.C. § 704.

The application became abandoned for failure to reply in a timely manner to the nonfinal rejection mailed December 13, 2007.

A grantable petition under 37 CFR 1.137(b) must be accompanied by: (1) the required reply, unless previously filed; (2) the petition fee as set forth in 37 CFR 1.17(m); (3) a statement that the entire delay in filing the required reply from the due date for the reply until the filing of a grantable petition pursuant to 37 CFR 1.137(b) was unintentional; and (4) any terminal disclaimer (and fee as set forth in 37 CFR 1.20(d)) required by 37 CFR 1.137(d). Where there is a question as to whether either the abandonment or the delay in filing a petition under 37 CFR 1.137 was unintentional, the Director may require additional information. See MPEP 711.03(c)(II)(C) and (D). The instant petition lacks item (2).

The required petition fee of $1,620 was not submitted with the instant petition on December 18, 2008.

Further correspondence with respect to this matter should be addressed as follows:

By Mail:
Mail Stop PETITION
Commissioner for Patents
P. O. Box 1450
Alexandria, VA 22313-1450

By hand:
U. S. Patent and Trademark Office
Customer Service Window, Mail Stop Petitions
Randolph Building
401 Dulany Street
Alexandria, VA 22314

The centralized facsimile number is **(571) 273-8300.**

Telephone inquiries concerning this decision should be directed to the undersigned at (571) 272-3208.

Karen Creasy
Petitions Examiner
Office of Petitions

UNITED STATES PATENT AND TRADEMARK OFFICE

Commissioner for Patents
United States Patent and Trademark Office
P.O. Box 1450
Alexandria, VA 22313-1450
www.uspto.gov

PHILIP S. JOHNSON
JOHNSON & JOHNSON
ONE JOHNSON & JOHNSON PLAZA
NEW BRUNSWICK NJ 08933-7003

MAILED

MAR 3 1 2009

OFFICE OF PETITIONS

In re Application of
Connie Baozhen Lin
Application No. 10/735,540
Filed: December 12, 2003
Attorney Docket No. J&J-5093

DECISION ON PETITION

This is a decision on the renewed petition under the unintentional provisions of 37 CFR 1.137(b), filed March 12, 2009, to revive the above-identified application.

The petition is **GRANTED**.

The petition satisfies the conditions for revival pursuant to the provisions of 37 CFR 1.137(b) in that (1) the reply in the form of an amendment; (2) the petition fee; and (3) the required statement of unintentional delay have been received. Accordingly, the reply to the nonfinal rejection mailed December 13, 2007, is accepted as having been unintentionally delayed.

Telephone inquiries concerning this decision should be directed to the undersigned at (571) 272-3208.

This application is being referred to Technology Center AU 1618 for appropriate action by the Examiner in the normal course of business on the reply received December 18, 2008.

Karen Creasy
Petitions Examiner
Office of Petitions

UNITED STATES PATENT AND TRADEMARK OFFICE

JAN 17 2007

Commissioner for Patents
United States Patent and Trademark Office
P.O. Box 1450
Alexandria, VA 22313-1450
www.uspto.gov

DOW AGROSCIENCES LLC
9330 ZIONSVILLE RD
INDIANAPOLIS IN 46268

In re Application of :
Michael B. Letchworth :
Serial No.: 10/735,545 : PETITION DECISION
Filed: December 11, 2003 :
Attorney Docket No.: 1388-029/63332

This is in response to the petition under 37 CFR § 1.59(b), filed November 14, 2006, to expunge information from the above identified application. This application has not been allowed.

Petitioner requests that the Declaration under 37 C.F.R. § 1.132 submitted to the Patent Office on November 14, 2006, be expunged from the record. Petitioner states either: (A) that the information contains trade secret material, proprietary material and/or material that is subject to a protective order which has not been made public; or (B) that the information submitted was unintentionally submitted and the failure to obtain its return would cause irreparable harm to the party who submitted the information or to the party in interest on whose behalf the information was submitted, and the information has not otherwise been made public. The petition fee set forth in 37 CFR § 1.17(g) has been paid.

This is an examined application which is currently under non-final rejection. As such the information provided has been reviewed, in part, but proceedings in the application have not been terminated. As stated in M.P.E.P. 724, upon allowance or other action closing prosecution in an application, petition may be made for return of Proprietary information. The information cannot be expunged at this time.

The petition is **DISMISSED**. Applicant may resubmit the petition subsequent to a Notice of Allowability or *ex parte Quayle* action being mailed in the application. No additional petition fee will be required at that time.

Should there be any questions about this decision please contact Marianne C. Seidel by letter addressed to Director, TC 1600, at the address listed above, or by telephone at 571-272-0584 or by facsimile sent to the general Office facsimile number, 703-872-9306.

George Elliott
Director, Technology Center 1600

UNITED STATES PATENT AND TRADEMARK OFFICE

APR 24 2007

Commissioner for Patents
United States Patent and Trademark Office
P.O. Box 1450
Alexandria, VA 22313-1450
www.uspto.gov

DOW AGROSCIENCES LLC
9330 ZIONSVILLE RD
INDIANAPOLIS IN 46268

In re Application of :
Michael B. Letchworth :
Serial No.: 10/735,545 : PETITION DECISION
Filed: December 11, 2003 :
Attorney Docket No.: 1388-029/63332

This is in response to the renewed petition under 37 CFR § 1.59(b), filed April 11, 2007, to expunge information from the above identified application. This application has now been allowed.

Petitioner requests that the Declaration under 37 C.F.R. § 1.132 submitted to the Patent Office on November 14, 2006, be expunged from the record. Petitioner states either: (A) that the information contains trade secret material, proprietary material and/or material that is subject to a protective order which has not been made public; or (B) that the information submitted was unintentionally submitted and the failure to obtain its return would cause irreparable harm to the party who submitted the information or to the party in interest on whose behalf the information was submitted, and the information has not otherwise been made public. The petition fee set forth in 37 CFR § 1.17(g) has been paid.

This application is currently allowed. As such the information provided has been reviewed and proceedings in the application are now terminated. As stated in M.P.E.P. 724, upon allowance or other action closing prosecution in an application, petition may be made for return of Proprietary information. The information can now be expunged.

The petition is **GRANTED**.

Should there be any questions about this decision please contact Marianne C. Seidel by letter addressed to Director, TC 1600, at the address listed above, or by telephone at 571-272-0584 or by facsimile sent to the general Office facsimile number, 703-872-9306.

Marianne C. Seidel
Quality Assurance Specialist/Program Examiner
Technology Center 1600

UNITED STATES PATENT AND TRADEMARK OFFICE

Commissioner for Patents
United States Patent and Trademark Office
P.O. Box 1450
Alexandria, VA 22313-1450
www.uspto.gov

CATERPILLAR INC.
100 N.E. ADAMS STREET
PATENT DEPT.
PEORIA IL 61629-6490

COPY MAILED

AUG 25 2005

OFFICE OF PETITIONS

In re Application of :
D. Andy Pierpont et al :
Application No. 10/735,546 : ON PETITION
Filed: December 12, 2003 :
Attorney Docket No. 03-149 :

This is a decision on the petition under 37 CFR 1.137(b), filed July 5, 2005, to revive the above-identified application.

The petition is **GRANTED**.

The above-identified application became abandoned for failure to submit the issue fee and publication fee in a timely manner in reply to the Notice of Allowance mailed October 22, 2004, which set a statutory period for reply of three (3) months. Accordingly, the above-identified application became abandoned on January 25, 2005.

There is no indication that petitioner has submitted an Issue Fee Transmittal Form (PTOL-85b). Accordingly, if petitioner desires to have the information normally found thereon printed on the patent, the attached blank Issue Fee Transmittal Form should be completed and returned to the Publishing Division within **ONE MONTH** from the mail date of this decision.

Telephone inquiries concerning this decision should be directed to the undersigned at (571) 272-3208.

This matter is being referred to Publishing Division.

Karen Creasy

Karen Creasy
Petitions Examiner
Office of Petitions
Office of the Deputy Commissioner
for Patent Examination Policy

ATTACHMENT: Blank Form PTOL-85b

UNITED STATES PATENT AND TRADEMARK OFFICE

Commissioner for Patents
United States Patent and Trademark Offfce
P.O. Box 1450
Alexandria, VA 22313-1450
www.uspto.gov

MAILED

JAN 0 4 2010

OFFICE OF PETITIONS

LADAS & PARRY LLP
26 WEST 61ST STREET
NEW YORK NY 10023

In re Application of	:	
Madan Lal SINGLA et alo.	:	
Application No. 10/735,555	:	DECISION ON PETITION
Filed: December 12, 2003	:	
Attorney Docket No. U 016492-7	:	

This is a decision on the petition under the unintentional provisions of 37 CFR 1.137(b), filed March 09, 2007 and resubmitted January 12, 2009, August 20, 2009 and December 18, 2009 to revive the above-identified application.

The petition is **GRANTED**.

The application became abandoned for failure to reply in a timely manner to the non-final Office action mailed, May 16, 2006, which set a shortened statutory period for reply of three (3) months. No extensions of time under the provisions of 37 CFR 1.136(a) were obtained. Accordingly, the application became abandoned on August 17, 2006.

The petition satisfies the requirements of 37 CFR 1.137(b) in that petitioner has supplied (1) the reply in the form of a amendment, (2) the petition fee of $1.500.00, and (3) a proper statement of unintentional delay.

The power of attorney filed by the applicants on January 16, 2007 has been accepted.

Telephone inquiries concerning this decision should be directed to the undersigned at (571)272-4231.

This application is being referred to Technology Center AU 2877 for appropriate action by the Examiner in the normal course of business on the reply received.

Michelle R. Eason
Paralegal Specialist
Office of Petitions

UNITED STATES PATENT AND TRADEMARK OFFICE

Commissioner for Patents
United States Patent and Trademark Office
P.O. Box 1450
Alexandria, VA 22313-1450
www.uspto.gov

Paper No.

RICHMOND, HITCHCOCK,
FISH & DOLLAR
P.O. Box 2443
Bartlesville OK 74005

COPY MAILED

OCT 2 4 2007

OFFICE OF PETITIONS

In re Application of :
Cross et al. : DECISION ON PETITION
Application No. 10/735,557 :
Filed: December 12, 2003 :
Title: PROCESS FOR THE :
REMOVAL OF HEAVY METALS FROM :
GASES, AND COMPOSITIONS :
THEREFOR AND THEREWITH :

This is a decision on the PETITION UNDER 37 CFR 1.181(a) filed June 29, 2007. This decision is made in light of the previous paper entitled "COMMUNICATION" filed on August 18, 2006, providing additional evidence and requesting withdrawal of the holding of abandonment.

The petition under 37 CFR 1.181 is **GRANTED**.

The above-identified application became abandoned for failure to file a timely and proper reply to the final Office action mailed December 14, 2005. The Office action set a shortened statutory period for reply of three (3) months, with extensions of time obtainable under § 1.136(a). A reply was timely filed on March 16, 2006. However, the reply was determined not to place the application in condition for allowance. (See Advisory Action mailed March 29, 2006). No further reply considered timely filed and no extension of time considered obtained, the application became abandoned effective June 15, 2006. (Receipt of a later-filed appeal brief on June 30, 2006 is acknowledged). A courtesy Notice of Abandonment was mailed on July 3, 2007.

Petitioner maintains that a response was timely filed. Specifically, petitioner maintains that a previous mailing of a

"Notice of Appeal" by the Certificate of Mailing on June 6, 2006, and the mailing of an accompanying "Petition for Extension of Time to File Notice of Appeal" by Certificate of Mailing also on June 6, 2006. The petition includes copies of the previously mailed correspondence.

37 CFR 1.8(b) provides that:

In the event that correspondence is considered timely filed by being mailed or transmitted in accordance with paragraph (a) of this section, but not received in the U.S. Patent and Trademark Office after a reasonable amount of time has elapsed from the time of mailing or transmitting of the correspondence, or after the application is held to be abandoned, or after the proceeding is dismissed, terminated, or decided with prejudice, the correspondence will be considered timely if the party who forwarded such correspondence:

> (1) Informs the Office of the previous mailing or transmission of the correspondence promptly after becoming aware that the Office has no evidence of receipt of the correspondence;
> (2) Supplies an additional copy of the previously mailed or transmitted correspondence and certificate; and
> (3) Includes a statement which attests on a personal knowledge basis or to the satisfaction of the Director to the previous timely mailing or transmission. If the correspondence was sent by facsimile transmission, a copy of the sending unit's report confirming transmission may be used to support this statement.

By communication filed August 18, 2006, Applicants timely responded to the Notice of Abandonment mailed July 3, 2006. It is noted that the correspondence, including the extension of time, included a certificate of mailing signed and dated June 6, 2006. However, the paper included a date of signing stamp thereon of June 13, 2006. By statement filed on August 18, 2006, registered patent practitioner Lynda Jolly, who also signed the June 6, 2006 certificates of mailing attests that the Notice of Appeal and Petition were each filed by Certificate of Mailing on June 6, 2006, prior to the June 14, 2006 deadline.

The extension of time for response within three months, necessary to make the instant response mailed June 6, 2006, has

been charged to Deposit Account No. 16-1575, as authorized. (It is noted that the extension of time left blank the Deposit Account Number. Nonetheless, it was included in the Notice of Appeal, which authorized any required fees.)

In view thereof, the Notice of Abandonment mailed July 3, 2006 is hereby **vacated**, and the holding of abandonment is **withdrawn**.

No fee is required on petition under § 1.181.

Technology Center AU 1754 has been advised of this decision. The application file is, thereby, forwarded to the Technology Center's technical support staff to withdraw the holding of abandonment and for action by the examiner in response to the Appeal Brief timely filed June 30, 2006 (and resubmitted June 29, 2007).

Telephone inquiries specific to this matter should be directed to the undersigned at (571) 272-3219.

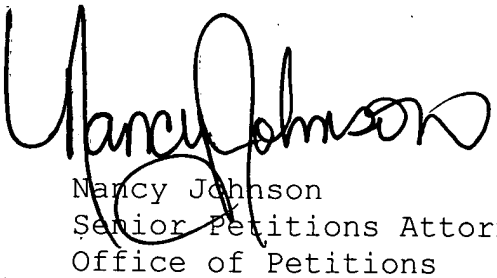

Nancy Johnson
Senior Petitions Attorney
Office of Petitions

UNITED STATES PATENT AND TRADEMARK OFFICE

UNITED STATES DEPARTMENT OF COMMERCE
United States Patent and Trademark Office
Address: COMMISSIONER FOR PATENTS
P.O. Box 1450
Alexandria, Virginia 22313-1450
www.uspto.gov

ConocoPhillips Company - IP Services Group
Attention: DOCKETING
600 N. Dairy Ashford
Bldg. MA-1135
Houston, TX 77079

Mail Date: 04/20/2010

Applicant	: Joseph B. Cross	: DECISION ON REQUEST FOR
Patent Number	: 7585487	: RECALCULATION of PATENT
Issue Date	: 09/08/2009	: TERM ADJUSTMENT IN VIEW
Appliction No	: 10/735,557	: OF WYETH AND NOTICE OF INTENT TO
Filed	: 12/12/2003	: ISSUE CERTIFICATE OF CORRECTION
		:

The Request for Recalculation is **GRANTED** to the extent indicated.

The patent term adjustment has been determined to be **743** days. The USPTO will *sua sponte* issue a certificate of correction reflecting the amount of PTA days determined by the recalculation.

Prior to the issuance of the certificate of correction, the USPTO will afford patentee an opportunity to be heard and request reconsideration. Accordingly, patentee has **one month or thirty (30) days**, whichever is longer, to file a request for reconsideration of this patent term adjustment calculation. See 35 U.S.C. 154(b)(3)(B)(ii) and 37 CFR 1.322(a)(4). No extensions of time will be granted under 37 CFR 1.136.

Patentee should use document code PET.OP if electronically filing a request for reconsideration of this patent term adjustment calculation. The patentee must also include the information required by 37 CFR 1.705(b)(2) and the fee required by 37 CFR 1.18(e). If patentee does not file a timely request for reconsideration of this patent term adjustment calculation including the information required by 37 CFR 1.705(b)(2) and the fee required by 37 CFR 1.18(e), the USPTO will issue a certificate of correction reflecting the PTA determination noted above.

Patentee should be aware that in order to preserve the right to review in the United States District Court for the District of Columbia of the USPTO patent term adjustment determination, patentee must ensure that he or she also take the steps required under 35 U.S.C. 154(b)(4)(A) in a timely manner. Nothing in the request for recalculation should be construed as providing an alternative time frame for commencing a civil action under 35 U.S.C. 154(b)(4)(A).

Any questions concerning this decision should be directed to the Office of Patent Legal Administration at 571-272-7702.

UNITED STATES PATENT AND TRADEMARK OFFICE

UNITED STATES DEPARTMENT OF COMMERCE
United States Patent and Trademark Office
Address: COMMISSIONER FOR PATENTS
P.O. Box 1450
Alexandria, Virginia 22313-1450
www.uspto.gov

ConocoPhillips Company - IP Services Group
Attention: DOCKETING
600 N. Dairy Ashford
Bldg. MA-1135
Houston, TX 77079

Mail Date: 05/17/2010

Applicant : Joseph B. Cross
Patent Number : 7585487
Issue Date : 09/08/2009
Application No: 10/735,557
Filed : 12/12/2003

: NOTICE CONCERNING IMPROPER
: CALCULATION OF PATENT TERM
: ADJUSTMENT BASED UPON USPTO
: IMPROPERLY MEASURING REDUCTION
: PERIOD UNDER 37 CFR 1.704(c)(10).

The United States Patent and Trademark Office (USPTO) discovered that in processing the recent recalculation decisions mailed in response to patentee's filed Request for Recalculation of Patent Term Adjustment in view of Wyeth, the USPTO improperly measured the reduction period for reductions under 37 CFR 1.704(c)(10). Pursuant to 37 CFR 1.704(c)(10), patentee's reduction begins on the date of filing the amendment under 37 CFR 1.312 ("1.312 amendment") or other related paper and ends on the date that the Office mails a response to the filing of the 1.312 amendment or other paper. It has been discovered that during the recalculation, the calculation failed to the limit the reduction to the mail date of the response to the 1.312 amendment or other paper. Accordingly, patentee's reductions were greater than warranted.

This notice **VACATES** the previous GRANTED request for recalculation and provides patentee with a revised GRANTED recalculation.

The patent term adjustment has been determined to be **775** days. The USPTO will *sua sponte* issue a certificate of correction reflecting the amount of patent term adjustment (PTA) days determined by the recalculation.

Prior to the issuance of the certificate of correction, the USPTO will afford patentee an opportunity to be heard and request reconsideration. Accordingly, patentee has **one month or thirty (30) days** from the mail date of this notice, whichever is longer, to file a request for reconsideration of this PTA calculation. See 35 U.S.C. § 154(b)(3)(B)(ii) and 37 CFR 1.322(a)(4).

Patentee should use document code PET.OP if electronically filing a request for reconsideration of this PTA calculation. The patentee must also include the information required by 37 CFR 1.705(b)(2), and the fee required by 37 CFR 1.18(e). If patentee does not file a timely request for reconsideration of this PTA calculation, including the information required by 37 CFR 1.705(b)(2) and the fee required by 37 CFR 1.18(e), the USPTO will issue a certificate of correction reflecting the PTA determination noted above.

Patentee should be aware that in order to preserve the right of review of the USPTO's PTA determination in the United States District Court for the District of Columbia, patentee must ensure that the steps required under 35 U.S.C. § 154 (b)(4) are taken in a timely manner. Nothing in the request for recalculation should be construed as providing an alternative time frame for commencing a civil action under 35 U.S.C. § 154(b)(4).

UNITED STATES PATENT AND TRADEMARK OFFICE

Commissioner for Patents
United States Patent and Trademark Office
P.O. Box 1450
Alexandria, VA 22313-1450
www.uspto.gov

COPY MAILED

MAR 20 2008

OFFICE OF PETITIONS

TEXAS INSTRUMENTS INCORPORATED
P O BOX 655474, M/S 3999
DALLAS TX 75265

In re Application of :
Nara **Won** :
Application No. 10/735,560 : DECISION ON PETITION
Filed: December 12, 2003 :
Attorney Docket No. TI-35878 :

This is a decision on the petition under the unintentional provisions of 37 CFR 1.137(b), filed November 09, 2007, to revive the above-identified application.

The petition is **GRANTED**.

This application became abandoned for failure to reply in a timely manner to the Notice of Non-Compliant Amendment mailed April 02, 2007, which set a shortened statutory period for reply of one (1) month. No extensions of time under the provisions of 37 CFR 1.136(a) were obtained. Accordingly, the above-identified application became abandoned on May 03, 2007.

The petition satisfies the requirements of 37 CFR 1.137(b) in that petitioner has supplied (1) the reply in the form of an amendment, (2) the petition fee of $1,540.00, and (3) a proper statement of unintentional delay. Accordingly, the reply is accepted as having been unintentionally delayed.

Telephone inquiries concerning this decision should be directed to Thuy Pardo at (571) 272-6052 or in her absence, the undersigned at (571)272-7099.

This application is being referred to Technology Center AU 2618 for appropriate action by the Examiner in the normal course of business on the reply received

David A. Bucci
Petitions Examiner
Office of Petitions

UNITED STATES PATENT AND TRADEMARK OFFICE

Commissioner for Patents
United States Patent and Trademark Office
P.O. Box 1450
Alexandria, VA 22313-1450
www.uspto.gov

SONNENSCHEIN NATH & ROSENTHAL LLP
P O BOX 061080
WACKER DRIVE STATION, SEARS TOWER
CHICAGO, IL 60606-1080

COPY MAILED

DEC 0 2 2004

OFFICE OF PETITIONS

In re Application of	:
Gottfried Wolf et al	:
Application No. 10/735,563	: DECISION ON PETITION
Filed: December 12, 2003	: UNDER 37 CFR 1.78(a)(3)
Attorney Docket No. 09796503-0157	:

This is a decision on the petition under 37 CFR 1.78(a)(3), filed July 12, 2004, to accept an unintentionally delayed claim under 35 U.S.C. §§ 120 and 365(c) for the benefit of priority to prior-filed International Application No. PCT/EP02/06330, filed June 10, 2002.

The petition is **GRANTED**.

A petition for acceptance of a claim for late priority under 37 CFR 1.78(a)(3) is only applicable to those applications filed on or after November 29, 2000. Further, the petition is appropriate only after the expiration of the period specified in 37 CFR 1.78(a)(2)(ii). In addition, the petition under 37 CFR 1.78(a)(3) must be accompanied by:

(1) the reference required by 35 U.S.C. § 120 and 37 CFR 1.78(a)(2)(i) of the prior-filed application, unless previously submitted;
(2) the surcharge set forth in § 1.17(t); and
(3) a statement that the entire delay between the date the claim was due under 37 CFR 1.78(a)(2)(ii) and the date the claim was filed was unintentional. The Commissioner may require additional information where there is a question whether the delay was unintentional.

The instant nonprovisional application was filed after November 29, 2000, and the claim herein for the benefit of priority to the above-noted, prior-filed PCT application is submitted after expiration of the period specified in 37 CFR 1.78(a)(2)(ii). A reference to the above-noted, prior-filed PCT application has been included in an amendment to the first sentence of the

specification following the title, as required by 37 CFR 1.78(a)(2)(iii). Accordingly, having found that the instant petition for acceptance of an unintentionally delayed claim for the benefit of priority under 35 U.S.C. §§ 120 and 365(c) to the above-noted, prior-filed PCT application satisfies the conditions of 37 CFR 1.78(a)(3), the petition is granted.

The granting of the petition to accept the delayed benefit claim to the prior-filed application under 37 CFR 1.78(a)(3) should not be construed as meaning that the instant application is entitled to the benefit of the prior-filed application. In order for the instant application to be entitled to the benefit of the prior-filed application, all other requirements under 35 U.S.C. §§ 120 and 365(c) and 37 CFR 1.78(a)(1) and (a)(2) must be met. Accordingly, the examiner will, in due course, consider this benefit claim and determine whether the instant application is entitled to the benefit of the earlier filing date.

Any inquiries concerning this decision may be directed to the undersigned at (571) 272-3218.

This application is being forwarded to Technology Center Art Unit 2841 for appropriate action on the amendment filed July 12, 2004, including consideration by the examiner of applicant's entitlement to claim benefit of priority under 35 U.S.C. §§ 120 and 365(c) to the above-noted, prior-filed PCT application.

Frances Hicks
Petitions Examiner
Office of Petitions
Office of the Deputy Commissioner
for Patent Examination Policy

UNITED STATES PATENT AND TRADEMARK OFFICE

Commissioner for Patents
United States Patent and Trademark Office
P.O. Box 1450
Alexandria, VA 22313-1450
www.uspto.gov

Motorola, Inc.
Law Department
1303 East Algonquin Road
3rd Floor
Schaumburg IL 60196

COPY MAILED
JAN 26 2010

In re Application of :
Xu et al. :
Application No. 10/735,564 : DECISION ON PETITION
Filed: 12/12/2003 :
Attorney Docket No. D03071 :

This is a decision on the petition under 37 CFR 1.137(b) filed August 7, 2009, to revive the above-identified application.

The petition is **GRANTED**.

The application became abandoned for failure to reply in a timely manner to the Restriction Requirement mailed July 21, 2008, which set a shortened statutory period for reply of one (1) month or thirty (30) days (whichever is later). No extensions of time under the provisions of 37 CFR 1.136(a) were obtained. Accordingly, the application became abandoned on August 22, 2008. A Notice of Abandonment was mailed on April 3, 2009.

The petition satisfies the requirements of 37 CFR 1.137(b) in that petitioner has supplied (1) the reply in the form of an election; (2) the petition fee; and (3) a proper statement of unintentional delay.

This matter is being forwarded to Technology Center AU 2455.

Telephone inquiries concerning this matter may be directed to the undersigned at (571) 272-3211.

C. T. Donnell

Christina Tartera Donnell
Senior Petitions Attorney
Office of Petitions

UNITED STATES PATENT AND TRADEMARK OFFICE

Commissioner for Patents
United States Patent and Trademark Office
P.O. Box 1450
Alexandria, VA 22313-1450
www.uspto.gov
DIW 09-04

BINGHAM MCCUTCHEN, LLP
SUITE 1800
600 ANTON BOULEVARD
COSTA MESA CA 92626

COPY MAILED

SEP 2 0 2004

OFFICE OF PETITIONS

In re Application of	:	
Li et al.	:	DECISION GRANTING
Application No. 10/735,579	:	PETITION
Filed: 12 December, 2003	:	
Attorney Docket H0003137 DIV-4780	:	

This is a decision on the petition under 37 CFR 1.53(e) on 23 August, 2004, which is treated as a petition requesting that the Notice of Incomplete Nonprovisional Application mailed on 2 July, 2004, be withdrawn.

The application was filed on 12 December, 2003, without drawings.[1] Accordingly, on 2 July, 2004, Initial Patent Examination Division mailed a "Notice of Incomplete Nonprovisional Application" stating that no filing date had been assigned because the application was deposited without drawings, and requiring drawings be filed if necessary. An oath or declaration was also required.

In response, on 23 August, 2004, the present petition was filed, along with a declaration. Petitioners assert that the drawings are not necessary for an understanding of the subject matter sought to be patented. Petitioners request that the application, without drawings, be accorded a filing date of 12 December, 2003.

It has been USPTO practice to treat an application that contains at least one process or method claim as an application for which a drawing is not necessary for an understanding of the invention

[1] 35 U.S.C. § 113 (first sentence) requires a drawing "where necessary for the understanding of the subject matter sought to be patented."

under 35 U.S.C. 113 (first sentence).[2] A review of the record reveals that Claims 1-22 are composition claims and 32-54 are method claims. Additionally, Claims 55-81 in the preliminary amendment filed with the application papers are composition claims. Therefore, the present application is deemed to be an application which does not require a drawing for an understanding of the invention. Accordingly, the application, as filed, is entitled to a filing date.

The petition is granted. The petition fee of $130.00 will be credited to counsel's deposit account, No. 50-2518.

The "Notice of Incomplete Nonprovisional Application" mailed on 2 July, 2004, is vacated to the extent that it stated that the application had not been accorded a filing date.

As Office records indicate the application has already been accorded a filing date of 12 December, 2003, the application is being forwarded to Technology Center 1700 for examination in due course.

Telephone inquiries specific to this matter should be directed to the undersigned at 703.308.6918.

D Wood

Douglas I. Wood
Senior Petitions Attorney
Office of Petitions

[2] MPEP 601.01(f).

UNITED STATES PATENT AND TRADEMARK OFFICE

Commissioner for Patents
United States Patent and Trademark Office
P.O. Box 1450
Alexandria, VA 22313-1450
www.uspto.gov

Paper No.

JOHN S. PRATT, ESQ.
KILPATRICK STOCKTON, LLP
1100 PEACH STREET
SUITE 2800
ATLANTA, GA 30309

COPY MAILED

SEP 15 2004

OFFICE OF PETITIONS

In re Application of:	:	
Klinker et al.	:	
Application No. 10/735,589	:	DECISION GRANTING
Filed: December 12, 2003	:	PETITION UNDER
Title of Invention:	:	37 CFR 1.47(a)
TOPOLOGY AWARE ROUTE CONTROL	:	

This is in response to a Petition under 37 CFR 1.47(a) Filing When Inventor is Unavailable, filed August 25, 2004, to allow the other inventor(s) to proceed with the application on behalf of himself or herself and the nonsigning inventor. The three (3) month extension of time is granted.

The petition is **granted**.

The above-identified application and papers have been reviewed and found in compliance with 37 CFR 1.47(a). This application is hereby accorded Rule 1.47(a) status.

Petitioner has shown that the non-signing inventor, Jeremy Johnson, refuses to join in the application.

As provided in Rule 1.47(a), this Office will forward notice of this application's filing to the non-signing inventor at the addresses given in the Petition. Notice of the filing of this application will also be published in the Official Gazette.

The application file is being returned to the Office of Initial Patent Examination for continued processing.

Telephone inquiries related to this decision may be directed to the undersigned at (703) 305-0014.

Derek L. Woods
Petitions Attorney
Office of Petitions

UNITED STATES PATENT AND TRADEMARK OFFICE

Commissioner for Patents
United States Patent and Trademark Office
P.O. Box 1450
Alexandria, VA 22313-1450
www.uspto.gov

GREENLEE WINNER AND SULLIVAN P C
4875 PEARL EAST CIRCLE
SUITE 200
BOULDER, CO 80301

COPY MAILED

AUG 0 8 2008

In re Application of Smith et al. :
Application No. 10/735,601 : Decision on Petition
Filing Date: December 12, 2003 :
Attorney Docket No. 95-02 :

This is a decision on the petition under 37 CFR 1.137(b), filed May 6, 2008, to revive the above-identified application.

The petition is **granted**.

The above-identified application became abandoned for failure to properly reply within the meaning of 37 CFR 1.113 in a timely manner to the final Office action mailed October 4, 2007, which set a shortened statutory period for reply of three (3) months. A three-month extension of time under the provisions of 37 CFR 1.136(a) was obtained. Accordingly, the above-identified application became abandoned on April 5, 2008.

The instant petition requests revival of the application.

A grantable petition under 37 CFR 1.137(b) must be accompanied by:

(1) the reply required to the outstanding Office action or notice, unless previously filed,
(2) the petition fee,
(3) a statement that the entire delay in filing the required reply from the due date for the reply until the filing of a grantable petition pursuant to 37 CFR 1.137(b) was unintentional, and
(4) a terminal disclaimer and fee if the application was filed on or before June 8, 1995 or if the application is a design application.

Petitioner has submitted a reply to the final Office action in the form of a RCE and submission. Petitioner has submitted the petition fee of $1,540. Petitioner has stated the entire delay in filing the required reply from the due date for the reply until the filing of a grantable petition pursuant to 37 CFR 1.137(b) was unintentional.

Petitioner has met the requirements to revive the above-identified application pursuant to 37 CFR 1.137(b). Therefore, the petition is granted and the application is revived.

Technology Center Art Unit 1633 will be informed of the instant decision and the application will be further examined in due course.

Telephone inquiries regarding this communication should be directed to Petitions Attorney Steven Brantley at (571) 272-3203.

Charles Steven Brantley
Senior Petitions Attorney
Office of Petitions

UNITED STATES PATENT AND TRADEMARK OFFICE

Commissioner for Patents
United States Patent and Trademark Office
P.O. Box 1450
Alexandria, VA 22313-1450
www.uspto.gov

HAO-JAN LIN
4F, NO. 2, ALLEY 2, LANE 290
SEC.1, JIOUJUANG ST.
NANGANG CHIU
TAIPEI, TAIWAN R.O. C.

COPY MAILED

AUG 0 5 2004

OFFICE OF PETITIONS

In re Application of
Hao-Jan Lin et al.
Application No. 10/735,602
Filed: December 12, 2003
For: LOW PRESSURE GAS ACCELERATED GENE GUN

Dear Mr. Lin:

You are named as a joint inventor in the above identified United States patent application, filed under the provisions of 35 U.S.C. 116 (United States Code), and 37 CFR 1.47(a), Rules of Practice in Patent Cases. Should a patent be granted on the application you will be designated therein as a joint inventor.

As a named inventor you are entitled to inspect any paper in the file wrapper of the application, order copies of all or any part thereof (at a prepaid cost per 37 CFR 1.19) or make your position of record in the application. Alternatively, you may arrange to do any of the preceding through a registered patent attorney or agent presenting written authorization from you. If you care to join the application, counsel of record (see below) would presumably assist you. Joining in the application would entail the filing of an appropriate oath or declaration by you pursuant to 37 CFR 1.63.

Telephone inquiries regarding this communication should be directed to the undersigned Petitions Attorney at (703) 305-4497. Effective September 24, 2004, the telephone number for the Office of Petitions will be changed to (571) 272-3282.

Requests for information regarding your application should be directed to the File Information Unit at 703/308-2733. Information regarding how to pay for and order a copy of the application, or a specific paper in the application, should be directed to Certification Division at 703/308-9726 or 1-800-972-6382 (outside the Washington D.C. area).

Patricia Faison-Ball
Senior Petitions Attorney
Office of Petitions

cc:
J.C. PATENTS
4 VENTURE, SUITE 250
IRVINE CA 92618

UNITED STATES PATENT AND TRADEMARK OFFICE

Commissioner for Patents
United States Patent and Trademark Office
P.O. Box 1450
Alexandria, VA 22313-1450
www.uspto.gov

J.C. PATENTS
4 VENTURE, SUITE 250
IRVINE CA 92618

COPY MAILED

AUG 0 5 2004

OFFICE OF PETITIONS

In re Application of
Hao-Jan Lin et al.
Application No. 10/735,602
Filed: December 12, 2003
Attorney Docket No. JCLA10516

DECISION ACCORDING STATUS UNDER 37 CFR 1.47(a)

This is in response to the petition under 37 CFR 1.47(a), filed May 21, 2004.

The petition is **GRANTED**.

Petitioners have shown that Hao-Jan Lin is named as a joint inventor with Ying-Chang Wang and Cheng-Hsien Chen, that Mr. Wang and Mr. Chen both signed the oath or declaration but that while the application papers have been forwarded to Mr. Lin, he has refused to execute the oath or declaration.

A statement provided by Mr. James Lin, President of Bio Ware (assignee) corroborates the claim that the application papers were sent to the last known address of Mr. Hao-Jan Lin and that an executed oath or declaration has not been returned to Bio Ware or their representatives. Thus, by his actions, Mr. Hao-Jan Lin refuses to cooperate with the filing of the application as filed

The above-identified application and papers have been reviewed and found in compliance with 37 CFR 1.47(a). This application is hereby accorded Rule 1.47(a) status.

As provided in Rule 1.47(c), this Office will forward notice of this application's filing to the non-signing legal representatives at the address given in the Declaration. Notice of the filing of this application will also be published in the Official Gazette.

After this decision is mailed, the application will be forwarded to Technology Center 1642 for examination in due course.

Telephone inquiries concerning this matter may be directed to the undersigned Petitions Attorney at (703) 305-4497.

Patricia Faison-Ball

Patricia Faison-Ball
Senior Petitions Attorney
Office of Petitions

UNITED STATES PATENT AND TRADEMARK OFFICE

UNITED STATES DEPARTMENT OF COMMERCE
United States Patent and Trademark Office
Address: COMMISSIONER FOR PATENTS
P.O. Box 1450
Alexandria, Virginia 22313-1450
www.uspto.gov

J C PATENTS
4 VENTURE, SUITE 250
IRVINE, CA 92618

Mail Date: 04/21/2010

Applicant	: Hao-Jan Lin	: DECISION ON REQUEST FOR
Patent Number	: 7638332	: RECALCULATION of PATENT
Issue Date	: 12/29/2009	: TERM ADJUSTMENT IN VIEW
Appliction No	: 10/735,602	: OF WYETH AND NOTICE OF INTENT TO
Filed	: 12/12/2003	: ISSUE CERTIFICATE OF CORRECTION
		:

The Request for Recalculation is **GRANTED** to the extent indicated.

The patent term adjustment has been determined to be **371** days. The USPTO will *sua sponte* issue a certificate of correction reflecting the amount of PTA days determined by the recalculation.

Prior to the issuance of the certificate of correction, the USPTO will afford patentee an opportunity to be heard and request reconsideration. Accordingly, patentee has **one month or thirty (30) days**, whichever is longer, to file a request for reconsideration of this patent term adjustment calculation. See 35 U.S.C. 154(b)(3)(B)(ii) and 37 CFR 1.322(a)(4). No extensions of time will be granted under 37 CFR 1.136.

Patentee should use document code PET.OP if electronically filing a request for reconsideration of this patent term adjustment calculation. The patentee must also include the information required by 37 CFR 1.705(b)(2) and the fee required by 37 CFR 1.18(e). If patentee does not file a timely request for reconsideration of this patent term adjustment calculation including the information required by 37 CFR 1.705(b)(2) and the fee required by 37 CFR 1.18(e), the USPTO will issue a certificate of correction reflecting the PTA determination noted above.

Patentee should be aware that in order to preserve the right to review in the United States District Court for the District of Columbia of the USPTO patent term adjustment determination, patentee must ensure that he or she also take the steps required under 35 U.S.C. 154(b)(4)(A) in a timely manner. Nothing in the request for recalculation should be construed as providing an alternative time frame for commencing a civil action under 35 U.S.C. 154(b)(4)(A).

Any questions concerning this decision should be directed to the Office of Patent Legal Administration at 571-272-7702.

UNITED STATES PATENT AND TRADEMARK OFFICE

Commissioner for Patents
United States Patent and Trademark Office
P.O. Box 1450
Alexandria, VA 22313-1450
www.uspto.gov

CABINET BEAU DE LOMENIE
158 RUE DE L'UNIVERSITE
PARIS 75007 FR FRANCE

COPY MAILED

AUG 2 3 2004

OFFICE OF PETITIONS

ON PETITION

In re Application of
Karl Belliard et al.
Application No. 10/735,603
Filed: December 12, 2003
Attorney's Docket No. 802220-0022US

This decision is in response to the petition filed May 21, 2004, under 37 CFR 1.182 in response to the Notice to File Missing Parts mailed March 25, 2004.

The petition is **DISMISSED**.

The application was filed December 12, 2003, however, on March 25, 2004, the Office of Initial Patent Examination mailed a "Notice" stating *inter alia* that the application had been accorded a filing date of December 12, 2003, but that Figure 4C described in the specification appeared to have been omitted.

In response, the present petition was filed. Petitioners explain that no Figures were missing on December 12, 2003, rather, the figures were mislabeled.

It is obvious from the petition that no drawings were actually missing on December 12, 2003. Rather, the figures were mislabeled, as a result of the applicants' filing error. However, the "Notice" mailed on March 25, 2004, was correct in stating that Figure 4C described in the specification appeared to have been omitted. Therefore, the "Notice" was properly mailed and will not be withdrawn.

The present petition was not necessitated by any error on the part of the Office and the $130.00 petition was required upon filing of the petition. Thus, the $130.00 petition fee will not be refunded.

The application will be processed and examined using the application papers filed on December 12, 2003.

Receipt is acknowledged of the preliminary amendment filed on May 21, 2004.

The application is being forwarded to Technology Center 3738 for examination in due course.

Telephone inquiries concerning this matter may be directed to the undersigned Petitions Attorney at (703) 305-4497.

Patricia Faison-Ball
Senior Petitions Attorney
Office of Petitions

UNITED STATES PATENT AND TRADEMARK OFFICE

Commissioner for Patents
United States Patent and Trademark Office
P.O. Box 1450
Alexandria, VA 22313-1450
www.uspto.gov

LIFE TECHNOLOGIES CORPORATION
C/O INTELLEVATE
P.O. BOX 52050
MINNEAPOLIS MN 55402

MAILED

MAR 29 2010

OFFICE OF PETITIONS

In re Application of :
Bruchez, et al. :
Application No. 10/735,608 : DECISION
Filed/Deposited: 12 December, 2003 :
Attorney Docket No. IVGN 620.2 CIP :

This is a decision on the petition filed on 29 January, 2010, considered as a petition under 37 C.F.R. §1.181 (no fee) requesting withdrawal of the holding of abandonment in the above-identified application.

The petition pursuant to 37 C.F.R. §1.181 is **DISMISSED**.

Any request for reconsideration of this decision must be submitted within TWO (2) MONTHS from the mail date of this decision. Extensions of time under 37 C.F.R. §1.136(a) are permitted. The reconsideration request should include a cover letter entitled "Renewed Petition under 37 C.F.R. §1.181."

This is **not** a final agency action within the meaning of 5 U.S.C. §704.

As to the Request to Withdraw
the Holding of Abandonment

Petitioner is directed to the Commentary at MPEP §711.03(c)(I) for guidance as to the proper showing requirements for relief under 37 C.F.R. §1.181.

Petitioner appears not to comply with the guidance in the Commentary at MPEP §711.03(c)(I)—as discussed below, Petitioner has failed to satisfy the showing requirements set forth there. Petitioner may find it beneficial to review that material and move step-wise through that guidance in the effort to satisfy the showing requirements (statements and supporting documentation).

Petitioner failed to state that the docketing system is sufficiently reliable and failed to evidence that the due date docket is that for the firm—and that any other files wherein replies were due for non-final Office actions were reviewed to ensure that the Office action herein had not been misfiled.

BACKGROUND

The record reflects as follows:

Petitioner failed to reply timely and properly to the non-final Office action mailed on 10 June, 2009, with required reply due absent extension of time on or before 10 September, 2009.

The application went abandoned by operation of law after midnight 10 September, 2009.

The Office mailed the Notice of Abandonment on 28 December, 2009.

On 11 June, 2008, Petitioner's decedent filed a reply, however, the application already stood abandoned.

For reasons unexplained, on 30 March, 2009, Petitioner's decedent/Petitioner filed a copy of the 15 August, 2007, Notice of Abandonment.

On 29 January, 2010, Petitioner filed, *inter alia*, a petition pursuant to 37 C.F.R. §1.181 and averred, *inter alia*, non-receipt of the Office action and provided a copy of the application docket sheet, made the statement of non-receipt at the correspondence address of record and the statement of search and non-discovery with a description of the docketing system. However, Petitioner failed to make the statement of sufficient reliability and failed to evidence that the due date docket is that for the firm. It also appeared that Petitioner may have redacted the statement of the reply(ies) due in a due-date listing, making it impossible to discern whether other files wherein replies were due for non-final Office actions were reviewed to ensure that the Office action herein had not been misfiled.

Thus, Petitioner has not completed the showing as discussed below in the citation from the Manual of Patent Examining Procedure (MPEP).

Petitioner is directed to the appropriate guidance (MPEP §711.03(c)(I)), and requested to comply with it.

With regard to Petitioner's request to withdraw the holding of abandonment pursuant to 37 C.F.R. §1.181, the guidance in the Commentary at MPEP §711.03(c)(I) provides in pertinent part as to non-receipt:

***

> The showing required to establish nonreceipt of an Office communication must include a statement from the practitioner describing the system used for recording an Office action received at the correspondence address of record with the USPTO. The statement should establish that the docketing system is sufficiently reliable. It is expected that the record would include, but not be limited to, the application number, attorney docket number, the mail date of the Office action and the due date for the response.
>
> Practitioner must state that the Office action was not received at the correspondence address of record, and that a search of the practitioner's record(s), including any file jacket or the equivalent, and the application contents, indicates that the Office action was not received. A copy of the record(s) used by the practitioner where the non-received Office action would have been entered had it been received is required.
>
> A copy of the practitioner's record(s) required to show non-receipt of the Office action should include the master docket for the firm. That is, if a three month period for reply was set in the nonreceived Office action, a copy of the master docket report showing all replies docketed for a date three months from the mail date of the nonreceived Office action must be submitted as documentary proof of nonreceipt of the Office action. If no such master docket exists, the practitioner should so state and provide other evidence such as, but not limited to, the following: the application file jacket; incoming mail log; calendar; reminder system; or the individual docket record for the application in question.[1]

***

If Petitioner is unable to comply with and/or otherwise satisfy these requirements, Petitioner may wish to revive the application: Petitioner may wish to properly file a petition to the Commissioner requesting revival of an application abandoned due to unintentional delay under 37 C.F.R. §1.137(b). (See: http://www.uspto.gov/web/offices/pac/mpep/documents/0700_711_03_c.htm#sect711.03c)

Out of an abundance of caution, Petitioners always are reminded that the filing of a petition under 37 C.F.R. §1.181 does not toll any periods that may be running any action by the Office and a petition seeking relief under the regulation must be filed within two (2) months of the act complained of (*see*: 37 C.F.R. §1.181(f)), and those registered to practice and all others who make representations before the Office are reminded to inquire into the underlying facts of representations made to the Office and support averments with the appropriate documentation– since all owe to the Office the continuing duty to disclose.[2]

---

[1] *See*: MPEP §711.03(c) (I)(A).

[2] See supplement of 17 June, 1999. The Patent and Trademark Office is relying on Petitioner's duty of candor and good faith and accepting a statement made by Petitioner. See Changes to Patent Practice and Procedure, 62 Fed. Reg. at 53160 and 53178, 1203 Off. Gaz. Pat. Office at 88 and 103 (responses to comments 64 and 109)(applicant obligated under 37 C.F.R. §10.18 to inquire into the underlying facts and circumstances when providing statements to the Patent and Trademark Office).

The availability of applications and application papers online to applicants/practitioners who diligently associate their Customer Number with the respective application(s) now provides an applicant/practitioner on-demand information as to events/transactions in an application.

STATUTES, REGULATIONS

Congress has authorized the Commissioner to "revive an application if the delay is shown to the satisfaction of the Commissioner to have been "unavoidable." 35 U.S.C. §133 (1994).

Allegations as to the Request to Withdraw the Holding of Abandonment

The guidance in the Commentary at MPEP §711.03(c)(I) specifies the showing required and how it is to be made and supported.

Petitioner appears not to have made the showing required.

CONCLUSION

Accordingly, the petition pursuant to 37 C.F.R. §1.181 is **dismissed**.

ALTERNATIVE VENUE

Should Petitioner wish to revive the application, Petitioner may wish to properly file a petition to the Commissioner requesting revival of an application abandoned due to unintentional delay under 37 C.F.R. §1.137(b). (See: http://www.uspto.gov/web/offices/pac/mpep/documents/0700_711_03_c.htm#sect711.03c)

A petition to revive on the grounds of unintentional delay must be filed promptly and such petition must be accompanied by the reply, the petition fee, a terminal disclaimer and fee where appropriate and a statement that "the entire delay in filing the required reply from the due date for the reply until the filing of a grantable petition was unintentional." (The statement is in the form available online.)

Further correspondence with respect to this matter should be addressed as follows:

By Mail:
Mail Stop PETITION
Commissioner for Patents
P. O. Box 1450
Alexandria, VA 22313-1450

By hand: U. S. Patent and Trademark Office
Customer Service Window, Mail Stop Petitions
Randolph Building
401 Dulany Street
Alexandria, VA 22314

By facsimile: **(571) 273-8300**
Attn: Office of Petitions

Telephone inquiries regarding this decision may be directed to the undersigned at (571) 272-3214—it is noted, however, that all practice before the Office is in writing (see: 37 C.F.R. §1.2[3]) and the proper authority for action on any matter in this regard are the statutes (35 U.S.C.), regulations (37 C.F.R.) and the commentary on policy (MPEP). Therefore, no telephone discussion may be controlling or considered authority for Petitioner's action(s).

/John J. Gillon, Jr./
John J. Gillon, Jr.
Senior Attorney
Office of Petitions

[3] The regulations at 37 C.F.R. §1.2 provide:

§1.2 Business to be transacted in writing.

All business with the Patent and Trademark Office should be transacted in writing. The personal attendance of applicants or their attorneys or agents at the Patent and Trademark Office is unnecessary. The action of the Patent and Trademark Office will be based exclusively on the written record in the Office. No attention will be paid to any alleged oral promise, stipulation, or understanding in relation to which there is disagreement or doubt.

UNITED STATES PATENT AND TRADEMARK OFFICE

Commissioner for Patents
United States Patent and Trademark Office
P.O. Box 1450
Alexandria, VA 22313-1450
www.uspto.gov

LIFE TECHNOLOGIES CORPORATION
C/O INTELLEVATE
P.O. BOX 52050
MINNEAPOLIS MN 55402

MAILED

JUN 16 2010

OFFICE OF PETITIONS

In re Application of :
Bruchez, et al. :
Application No. 10/735,608 : DECISION
Filed/Deposited: 12 December, 2003 :
Attorney Docket No. IVGN 620.2 CIP :

This is a decision on the petition filed on 3 and 4 May, 2010, considered as a petition pursuant to 37 C.F.R. §1.181 (no fee) requesting withdrawal of the holding of abandonment in the above-identified application and pursuant to 37 C.F.R. §1.137(b) to revive an application abandoned due to unintentional delay.

The petition pursuant to 37 C.F.R. §1.181 is **GRANTED**; the petition pursuant to 37 C.F.R. §1.137(b) is **DISMISSED**.

As to the Request to Withdraw
the Holding of Abandonment

Petitioners always ares directed to the Commentary at MPEP §711.03(c)(I) for guidance as to the proper showing requirements for relief under 37 C.F.R. §1.181.

As to the Allegations
of Unintentional Delay

The requirements of a grantable petition pursuant to 37 C.F.R. §1.137(b) are the petition and fee therefor, a reply, a proper statement of unintentional delay under the regulation, and, where applicable, a terminal disclaimer and fee.

Petitioners attentions always are directed to the guidance in the Commentary at MPEP §711.03(c)(II).

BACKGROUND

The record reflects as follows:

Petitioner failed to reply timely and properly to the non-final Office action mailed on 10 June, 2009, with required reply due absent extension of time on or before 10 September, 2009.

The application went abandoned by operation of law after midnight 10 September, 2009.

The Office mailed the Notice of Abandonment on 28 December, 2009.

On 29 January, 2010, Petitioner filed, *inter alia*, a petition pursuant to 37 C.F.R. §1.181 and averred, *inter alia*, non-receipt of the Office action and provided a copy of the application docket sheet, made the statement of non-receipt at the correspondence address of record and the statement of search and non-discovery with a description of the docketing system. However, Petitioner failed to make the statement of sufficient reliability and failed to evidence that the due date docket is that for the firm. It also appeared that Petitioner may have redacted the statement of the reply(ies) due in a due-date listing, making it impossible to discern whether other files wherein replies were due for non-final Office actions were reviewed to ensure that the Office action herein had not been misfiled. Thus, Petitioner did not complete the showing as discussed below in the citation from the Manual of Patent Examining Procedure (MPEP). The petition was dismissed on 29 March, 2010.

On 29 January, 2010, Petitioner, *inter alia*, re-advanced the petition pursuant to 37 C.F.R. §1.181 and averred, *inter alia*, non-receipt of the Office action and provided a copy of the application docket sheet, made the statement of non-receipt at the correspondence address of record and the statement of search and non-discovery with a description of the docketing system, with the statement of sufficient reliability and a copy of the due date docket/calendar for the firm. Thus Petitioner sought to comply with the guidance in the Commentary at MPEP §711.03(c)(I).

With regard to Petitioner's request to withdraw the holding of abandonment pursuant to 37 C.F.R. §1.181, the guidance in the Commentary at MPEP §711.03(c)(I) provides in pertinent part as to non-receipt:

***

> The showing required to establish nonreceipt of an Office communication must include a statement from the practitioner describing the system used for recording an Office action received at the correspondence address of record with the USPTO. The statement should establish that the docketing system is sufficiently reliable. It is expected that the record would include, but not be limited to, the application number, attorney docket number, the mail date of the Office action and the due date for the response.
>
> Practitioner must state that the Office action was not received at the correspondence address of record, and that a search of the practitioner's record(s), including any file jacket or the equivalent, and the application contents, indicates that the Office action was not

> received. A copy of the record(s) used by the practitioner where the non-received Office action would have been entered had it been received is required.
>
> A copy of the practitioner's record(s) required to show non-receipt of the Office action should include the master docket for the firm. That is, if a three month period for reply was set in the nonreceived Office action, a copy of the master docket report showing all replies docketed for a date three months from the mail date of the nonreceived Office action must be submitted as documentary proof of nonreceipt of the Office action. If no such master docket exists, the practitioner should so state and provide other evidence such as, but not limited to, the following: the application file jacket; incoming mail log; calendar; reminder system; or the individual docket record for the application in question.[1]
>
> ***

Out of an abundance of caution, Petitioners always are reminded that the filing of a petition under 37 C.F.R. §1.181 does not toll any periods that may be running any action by the Office and a petition seeking relief under the regulation must be filed within two (2) months of the act complained of (*see*: 37 C.F.R. §1.181(f)), and those registered to practice and all others who make representations before the Office are reminded to inquire into the underlying facts of representations made to the Office and support averments with the appropriate documentation– since all owe to the Office the continuing duty to disclose.[2]

The availability of applications and application papers online to applicants/practitioners who diligently associate their Customer Number with the respective application(s) now provides an applicant/practitioner on-demand information as to events/transactions in an application.

STATUTES, REGULATIONS

Congress has authorized the Commissioner to "revive an application if the delay is shown to the satisfaction of the Commissioner to have been "unavoidable." 35 U.S.C. §133 (1994).

Allegations as to the Request to Withdraw the Holding of Abandonment

The guidance in the Commentary at MPEP §711.03(c)(I) specifies the showing required and how it is to be made and supported.

---

[1] *See*: MPEP §711.03(c) (I)(A).

[2] See supplement of 17 June, 1999. The Patent and Trademark Office is relying on Petitioner's duty of candor and good faith and accepting a statement made by Petitioner. See Changes to Patent Practice and Procedure, 62 Fed. Reg. at 53160 and 53178, 1203 Off. Gaz. Pat. Office at 88 and 103 (responses to comments 64 and 109)(applicant obligated under 37 C.F.R. §10.18 to inquire into the underlying facts and circumstances when providing statements to the Patent and Trademark Office).

Petitioner appears to have made the showing required.

As to Allegations of
Unintentional Delay

The requirements of a grantable petition pursuant to 37 C.F.R. §1.137(b) are the petition and fee therefor, a reply, a proper statement of unintentional delay under the regulation, and, where applicable, a terminal disclaimer and fee.

It appears that the matter is moot.

CONCLUSION

Accordingly, the petition as considered pursuant to 37 C.F.R. §1.181 is **granted** and the28 December 2009, Notice of Abandonment is **vacated**. the petition pursuant to 37 C.F.R. §1.137(b) is **dismissed as moot**.

The instant application is released to Technology Center/AU 1641 for further processing in due course.

Petitioner may find it beneficial to view Private PAIR within a fortnight of the instant decision to ensure that the revival has been acknowledged by the TC/AU in response to this decision. It is noted that all inquiries with regard to that change in status need be directed to the TC/AU where that change of status must be effected—that does not occur in the Office of Petitions.

Telephone inquiries regarding this decision may be directed to the undersigned at (571) 272-3214—it is noted, however, that all practice before the Office is in writing (see: 37 C.F.R. §1.2[3]) and the proper authority for action on any matter in this regard are the statutes (35 U.S.C.), regulations (37 C.F.R.) and the commentary on policy (MPEP). Therefore, no telephone discussion may be controlling or considered authority for Petitioner's action(s).

/John J. Gillon, Jr./
John J. Gillon, Jr.
Senior Attorney
Office of Petitions

---

[3] The regulations at 37 C.F.R. §1.2 provide:

§1.2 Business to be transacted in writing.

All business with the Patent and Trademark Office should be transacted in writing. The personal attendance of applicants or their attorneys or agents at the Patent and Trademark Office is unnecessary. The action of the Patent and Trademark Office will be based exclusively on the written record in the Office. No attention will be paid to any alleged oral promise, stipulation, or understanding in relation to which there is disagreement or doubt.

UNITED STATES PATENT AND TRADEMARK OFFICE

Commissioner for Patents
United States Patent and Trademark Office
P.O. Box 1450
Alexandria, VA 22313-1450
www.uspto.gov

NIXON PEABODY LLP
401 9TH ST NW
SUITE 900
WASHINGTON DC 20004-2128

COPY MAILED

MAY 18 2005

OFFICE OF PETITIONS

In re Application of	:	
Asano, et al.	:	
Application No. 10/735,627	:	DECISION GRANTING PETITION
Filed: December 16, 2003	:	
Attorney Docket No. 740756-2688	:	

This is a decision on the "PETITION REGARDING NOTICE OF OMITTED ITEMS IN A NONPROVISIONAL APPLICATION", filed October 27, 2004, requesting that the above-identified application be accorded a filing date of December 16, 2003.

Application papers in the above-identified application were filed on December 30, 2003. On April 27, 2004, the Office mailed a "Notice to File Missing Parts of Nonprovisional Application", informing Applicants that the application had been accorded a filing date of December 16, 2003. The Notice set an extendable period of two months for applicant to submit: (1) an English translation of the specification (together with a statement that the translation is accurate); (2) the surcharge for filing a non English specification; and (3) replacement drawings.

On July 27, 2004, Applicants filed the above items in reply to the Notice to File Missing Parts. Applicants' submission was made timely with the purchase of a one month extension of time. However, on September 2, 2004, the Office mailed a "Withdrawal of Previously Sent Notice" and a "Notice of Omitted Items in a Nonprovisional Application". Applicants were notified that the

Notice to File Missing Parts mailed April 27, 2004 was mailed in error. In addition, applicants were informed that pages 21 and 25 of the specification, and Figures 8 and 9 of the drawings, appeared to have been omitted. Applicants were notified that they could contend these missing pages and figures had been previously filed, or submit them accept the date of their submission as the filing date of the application.

In response, on October 27, 2004, Applicants submitted a copy of the English language translation, including pages 21 and 25, a substitute specification, and replacement drawings. Applicants admit that Figures 8 and 9 were omitted when submitted in response to the Notice to File Missing Parts, but state that the Figures were present in the Japanese language application filed on December 16, 2003. In addition, applicants state that the complete Japanese language application was filed on December 16, 2003, and that the application should maintain its filing date of May 30, 2003.

Even though Figures 8 and 9 were not included in the English language translation filed on July 27, 2004, the "Notice of Omitted Items" should not have been mailed in this circumstance. Clearly Figures 8 and 9 were contained in the Japanese language application filed on December 16, 2003.

In view of the above, the "Notice of Omitted Items" mailed on September 2, 2004 was mailed in error and is hereby **VACATED**.

The petition is **GRANTED**.

Given the basis for granting this petition, no petition fee was required, and none has been charged.

The application file is being forwarded to the Office of Initial Patent Examination for further processing with a filing date of December 16, 2003, using the pages of substitute specification filed on July 27, 2004, and Figures 8 and 9 of the drawings as resupplied on petition filed October 27, 2004.

Telephone inquiries related to this decision should be directed to the undersigned at 571-272-3207.

Cliff Congo
Petitions Attorney
Office of Petitions

SPE D. Schuberg

SPE RESPONSE FOR CERTIFICATE OF CORRECTION

Paper No.: _____

DATE : 5/16/06

TO SPE OF : ART UNIT 2834

SUBJECT : Request for Certificate of Correction for Appl. No.: 10/735,650 Patent No.: 6,987,335

Please respond to this request for a certificate of correction within 7 days.

Please review the requested changes/corrections as shown in the **COCIN** document(s) in the IFW application image. No new matter should be introduced, nor should the scope or meaning of the claims be changed.

Please complete the response (see below) and forward the completed response to scanning using document code **COCX**.

Lamonte M. Newsome
Certificates of Correction Branch
703-308-9390 ext. 112

Thank You For Your Assistance

The request for issuing the above-identified correction(s) is hereby:

Note your decision on the appropriate box.

- ☒ **Approved** — **All** changes apply.
- ☐ **Approved in Part** — Specify below which changes **do not** apply.
- ☐ **Denied** — State the reasons for denial below.

Comments: _____

_____

_____

_____

_____

D. Schuberg — **SPE**

2834 — **Art Unit**

OIPE IAP45 MAY 05 2006 PATENT & TRADEMARK OFFICE

00862.023385

PATENT

IN THE UNITED STATES PATENT AND TRADEMARK OFFICE

In re Patent of:	)	
Nobushige KORENAGA	)	Examiner: J. Waks
Application No.: 10/735,650	)	Group Art Unit: 2834
Filed: December 16, 2003	)	
For: ALIGNMENT APPARATUS AND EXPOSURE APPARATUS USING THE SAME	)	May 5, 2006
U.S. Patent No. 6,987,335 B2	)	
Issued: January 17, 2006	)	

Certificate MAY 10 2006 of Correction

Commissioner for Patents
P.O. Box 1450
Alexandria, VA 22313-1450
Attention: Certificate of Correction Branch

REQUEST FOR
CERTIFICATE OF CORRECTION
UNDER RULES 322 AND 323

Sir:

Patentee requests that a Certificate of Correction be issued by the Patent and Trademark Office due to errors which appear in the printed patent as a result of U.S. Patent and Trademark Office mistakes and mistakes of a minor nature which are not the fault of the U.S. Patent and Trademark Office.

05/08/2006 SZEWDIE1 00000059 6987335
01 FC:1811 100.00 OP

MAY 10 2006

Accompanying this letter is a check for $100.00 to cover the statutory fee for such Certificate of Correction. Any additional fee required by this paper may be charged to Deposit Account No. 06-1205.

Patentee's undersigned attorney may be reached in our Washington, D.C. Office by telephone at (202) 530-1010. All correspondence should continue to be directed to our below-listed address.

Respectfully submitted,

Steven E. Warner

Attorney for Patentee
Steven E. Warner
Registration No. 33,326

FITZPATRICK, CELLA, HARPER & SCINTO
30 Rockefeller Plaza
New York, New York 10112-3801
Facsimile: (212) 218-2200
SEW/eab

DC_MAIN 239359v1

MAY 10 2006

Staple Here Only!

PRINTER'S TRIM LINE

UNITED STATES PATENT AND TRADEMARK OFFICE

CERTIFICATE OF CORRECTION

PATENT NO. : 6,987,335 B2

DATED : January 17, 2006

INVENTOR(S): Nobushige KORENAGA

It is certified that error appears in the above-identified patent and that said Letters Patent is hereby corrected as shown below:

ON THE COVER PAGE:

In item "(56) **References Cited**," under "U.S. PATENT DOCUMENTS," in the second column, the fifth-listed document "6,650,079 B2 * 11/2001 Hazelton et al.....318/649" should read -- 6,650,079 B2 * 11/2003 Binnard .....318/649 --.

In item "(56) **References Cited**," under "FOREIGN PATENT DOCUMENTS," "EP 03 25 8183 7/2004" should read -- EP 03 25 8183 12/2003" and the following should be added:

-- EP 1 434 335 6/2004 --.

COLUMN 6:

Line 5, "ar" should read -- are --.

Line 43, "magnet" should read -- magnetic --.

COLUMN 15:

Line 17, "separate" should read -- separates --.

MAILING ADDRESS OF SENDER:

FITZPATRICK, CELLA, HARPER & SCINTO
30 Rockefeller Plaza
New York, New York 10112-3801
(212) 218-2100 - Telephone
(212) 218-2200 - Facsimile

No. of add'l. copies @ 30¢ per page

FORM PTO 1050 (REV. 3.82)

MAY 10 2006

Staple Here Only!

PRINTER'S TRIM LINE

UNITED STATES PATENT AND TRADEMARK OFFICE

CERTIFICATE OF CORRECTION

PATENT NO. : 6,987,335 B2

DATED : January 17, 2006

INVENTOR(S): Nobushige KORENAGA

It is certified that error appears in the above-identified patent and that said Letters Patent is hereby corrected as shown below:

COLUMN 18:

Line 13, "regions as" should read -- regions are as --.

Line 36, "modification, appli-" should read -- modification, and appli- --.

COLUMN 19:

Line 27, "an" should read -- and --.

COLUMN 20:

Line 55, "plate" should read -- plate- --.

Line 56, "has" should read -- has: --.

COLUMN 22:

Line 17, "plate" should read -- plate- --.

Line 18, "has" should read -- has: --.

MAILING ADDRESS OF SENDER:

FITZPATRICK, CELLA, HARPER & SCINTO
30 Rockefeller Plaza
New York, New York 10112-3801
(212) 218-2100 - Telephone
(212) 218-2200 - Facsimile

FORM PTO 1050 (REV. 3.82)

PATENT NO. 6,987,335 B2

No. of add'l. copies @ 30¢ per page

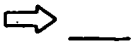

MAY 10 2006

UNITED STATES PATENT AND TRADEMARK OFFICE

Commissioner for Patents
United States Patent and Trademark Office
P.O. Box 1450
Alexandria, VA 22313-1450
www.uspto.gov

Thomas Liniak
Liniak, Berenato & White
Suite 240
6550 Rock Spring Drive
Bethesda, MD 20817

COPY MAILED
JUL 25 2006
OFFICE OF PETITIONS

In re Application of :
James T. Croyle :
Application No. 10/735,656 : DECISION ON PETITION
Filed: December 16, 2003 : TO WITHDRAW
Attorney Docket No. 8200.793 : FROM RECORD
:

This is a decision on the Request to Withdraw as attorney or agent of record under 37 C.F.R. § 1.36(b), filed January 5,2006.

The request is **APPROVED**.

A grantable request to withdraw as attorney/agent of record must be signed by every attorney/agent seeking to withdraw or contain a clear indication that one attorney is signing on behalf of another/others. A request to withdraw will not be approved unless at least 30 (thirty) days would remain between the date of approval and the later of the expiration date of a time to file a response or the expiration date of the maximum time period which can be extended under 37 C.F.R. § 1.136(a).

The request was signed by Thomas P. Liniak.

Thomas P. Liniak has been withdrawn as attorney or agent of record; all other attorneys remain of record.

The correspondence address of record remains unchanged.

Telephone inquiries concerning this decision should be directed to Terri Williams at 571-272-2991.

for David Bucci
Petitions Examiner
Office of Petitions

UNITED STATES PATENT AND TRADEMARK OFFICE

UNDER SECRETARY OF COMMERCE FOR INTELLECTUAL PROPERTY AND
DIRECTOR OF THE UNITED STATES PATENT AND TRADEMARK OFFICE
WASHINGTON, DC 20231
www.uspto.gov

JAN 21 2005

Vladimir M. Kabakov
4600 S. Four Mile Run Drive, Apt. 1201
Arlington, VA 22204

MAILED

JAN 21 2005

OFFICE OF THE DIRECTOR
TC 3600

In re application of : **DECISION ON PETITION**
Vladimir M. Kabakov : **TO MAKE SPECIAL**
Application No. 10/735,664 : **(APPLICANT'S AGE)**
Filed: December 16, 2003 :
For: TRANSVERSE WATERCRAFT PROPELLER

This is a decision on the petition submitted with the specification on December 16, 2003, under 37 CFR 1.102 (c) to make the above-identified application special under the accelerated examination procedure set forth in MPEP 708.02, Section IV: Applicant's Age.

The petition is **GRANTED**.

An application may be accorded special status upon the filing of a petition providing evidence showing that the applicant is at least 65 years old. Such a showing may be provided by evidence such as a birth certificate or a statement from the applicant.

The evidence submitted with the petition is a copy of the US Passport from the applicant showing that he is at least 65 years of age.

The examiner is directed (1) to make an interference search for possible interfering applications, (2) to promptly examine this application out of turn, and (3) if any interfering application is discovered, to examine such application simultaneously and state in the first official letter of such application that it is being taken out of turn because of a possible interference.

Petitioner is advised that this application will continue to be special, throughout its entire prosecution and pendency, including interference or appeal, if any, only if petitioner makes a prompt ***bona fide*** effort, in response to each Office action, to place the application in condition for allowance, even if it is necessary to conduct an interview with the examiner to accomplish this purpose.

SUMMARY: Petition to Make Special **GRANTED**.

Randolph A. Reese
Special Programs Examiner
Technology Center 3600
(703) 308-2121

RAR/jwk: 1/12/05

UNITED STATES PATENT AND TRADEMARK OFFICE

Commissioner for Patents
United States Patent and Trademark Office
P.O. Box 1450
Alexandria, VA 22313-1450
www.uspto.gov

Robert M. Siminski
Harness, Dickey & Pierce, P.L.C.
P.O. Box 828
Bloomfield Hills, MI 48303

COPY MAILED

MAY 29 2007

OFFICE OF PETITIONS

In re Patent No. 7,083,123
Issue Date: August 1, 2006
Application No. 10/735,684
Filed: December 15, 2003
Patentee(s): Jean-Claude Molla

DECISION ON PETITION

This is a decision on the petitioner under 37 CFR 1.183 filed on October 16, 2006, which is being treated as a request under 37 CFR 3.81(b)[1] to correct the assignee data on the front page of the above patent by way of a certificate of correction.

The petition is **dismissed**.

37 CFR 3.81(b) permits the patent to issue in the name of an assignee if the assignment was submitted after payment of the issue fee, but ***prior to issuance of a patent***.

Petitioner requests issuance of a Certificate of Correction to correct the address of the assignee from "Saint-Dennis La Plaine Cedex, France" to "Paris, France." However, USPTO assignment records fail to show that an assignment listing the assignee's address as "Paris, France" was recorded prior to issuance of the patent. Therefore, a Certificate of Correction would not be in order. *See MPEP Section 306.*

In view of the above, the $100 Certificate of Correction fee submitted on October 16, 2006 will be refunded to petitioner. Also, a petition under 37 CFR 3.81 requires a processing fee of $130. Accordingly, the overpayment of $270 submitted with the petition plus the $100 Certificate of Correction fee will be refunded to petitioner by Treasury Check, in due course.

This application file is being referred to Files Repository.

Inquiries concerning this decision should be directed to the undersigned at (571) 272-3226.

Andrea Smith
Petitions Examiner
Office of Petitions

[1] *See* Official Gazette of June 22, 2004

UNITED STATES PATENT AND TRADEMARK OFFICE

UNITED STATES DEPARTMENT OF COMMERCE
United States Patent and Trademark Office
Address: COMMISSIONER FOR PATENTS
P.O. Box 1450
Alexandria, Virginia 22313-1450
www.uspto.gov

KENYON & KENYON LLP
1500 K STREET N.W.
SUITE 700
WASHINGTON, DC 20005

Mail Date: 04/21/2010

Applicant	: Shigetaka Hamada	: DECISION ON REQUEST FOR
Patent Number	: 7597977	: RECALCULATION of PATENT
Issue Date	: 10/06/2009	: TERM ADJUSTMENT IN VIEW
Appliction No	: 10/735,694	: OF WYETH AND NOTICE OF INTENT TO
Filed	: 12/16/2003	: ISSUE CERTIFICATE OF CORRECTION
		:

The Request for Recalculation is **GRANTED** to the extent indicated.

The patent term adjustment has been determined to be **158** days. The USPTO will *sua sponte* issue a certificate of correction reflecting the amount of PTA days determined by the recalculation.

Prior to the issuance of the certificate of correction, the USPTO will afford patentee an opportunity to be heard and request reconsideration. Accordingly, patentee has **one month or thirty (30) days**, whichever is longer, to file a request for reconsideration of this patent term adjustment calculation. See 35 U.S.C. 154(b)(3)(B)(ii) and 37 CFR 1.322(a)(4). No extensions of time will be granted under 37 CFR 1.136.

Patentee should use document code PET.OP if electronically filing a request for reconsideration of this patent term adjustment calculation. The patentee must also include the information required by 37 CFR 1.705(b)(2) and the fee required by 37 CFR 1.18(e). If patentee does not file a timely request for reconsideration of this patent term adjustment calculation including the information required by 37 CFR 1.705(b)(2) and the fee required by 37 CFR 1.18(e), the USPTO will issue a certificate of correction reflecting the PTA determination noted above.

Patentee should be aware that in order to preserve the right to review in the United States District Court for the District of Columbia of the USPTO patent term adjustment determination, patentee must ensure that he or she also take the steps required under 35 U.S.C. 154(b)(4)(A) in a timely manner. Nothing in the request for recalculation should be construed as providing an alternative time frame for commencing a civil action under 35 U.S.C. 154(b)(4)(A).

Any questions concerning this decision should be directed to the Office of Patent Legal Administration at 571-272-7702.

UNITED STATES PATENT AND TRADEMARK OFFICE

Commissioner for Patents
United States Patent and Trademark Office
P.O. Box 1450
Alexandria, VA 22313-1450
www.uspto.gov

MAIL

FEB 17 2009

DIRECTOR OFFICE
TECHNOLOGY CENTER 2600

CROWELL & MORING LLP
INTELLECTUAL PROPERTY GROUP
P.O. BOX 14300
WASHINGTON DC 20044-4300

In re Application of:
MAN-HAK TSO, MICHAEL et al.
Application No. 10/735,696
Filed: December 16, 2003
For: STATELESS MESSAGE ROUTING

DECISION ON PETITION
UNDER 37 C.F.R. § 1.181

This is a decision on the petition filed January 28, 2009 under 37 CFR § 1.181 to invoke Supervisory Authority of the Commissioner and require the Examiner to withdraw the finality of the rejection mailed January 22, 2009.

The Applicant's counsel filed a petition to the Director under 37 CFR § 1.181 to seek relief from actions of the Examiner in relation to the Final Office Action mailed January 22, 2009. In the petition, Applicant's counsel alleged that the finality of the office action was improper because the Examiner introduced a new ground of rejection in the Final Office Action that was neither necessitated by applicant's amendment of the claims nor based on information submitted in an Information Disclosure Statement.

A review of the file indicates that no IDS was submitted to cause the new grounds of rejection, and that the amendment of October 08, 2008 did not necessitate the new rejection of claim 23 under 35 U.S.C. § 101. Therefore, the finality of the January 22, 2009 Office action is improper and hereby withdrawn. Because the error does not affect applicant's ability to reply to the Office action, the period for response continues to run from January 22, 2009.

Accordingly, the petition is **GRANTED.**

Any inquiry concerning this decision should be directed to Chau Nguyen at (571) 272-3126.

Valencia Martin-Wallace
Director
Technology Center 2400
Network, Multiplexing, Cable and Security

UNITED STATES PATENT AND TRADEMARK OFFICE

Commissioner for Patents
United States Patent and Trademark Office
P.O. Box 1450
Alexandria, VA 22313-1450
www.uspto.gov

MURATA MANUFACTURING COMPANY
C/O KEATING & BENNETT
8180 GREENSBORO DRIVE
SUITE 850
MCLEAN VA 22102

COPY MAILED

FEB 2 2 2006

OFFICE OF PETITIONS

In re Application of :
Masato Koike et al :
Application No. 10/735,704 : ON PETITION
Filed: December 16, 2003 :
Attorney Docket No. 36856.1160 :

This is a decision on the petition, filed February 21, 2006, under 37 CFR 1.313(c)(2) to withdraw the above-identified application from issue after payment of the issue fee.

The petition is **GRANTED.**

The above-identified application is withdrawn from issue for consideration of a submission under 37 CFR 1.114 (request for continued examination). See 37 CFR 1.313(c)(2).

Petitioner is advised that the issue fee paid on February 14, 2006, in the above-identified application cannot be refunded. If, however, the above-identified application is again allowed, petitioner may request that it be applied towards the issue fee required by the new Notice of Allowance.[1]

Telephone inquiries should be directed to the undersigned at (571) 272-3208.

The examiner of Technology Center AU 2834 will consider the request for continued examination under 37 CFR 1.114.

Karen Creasy

Karen Creasy
Petitions Examiner
Office of Petitions
Office of the Deputy Commissioner
for Patent Examination Policy

---

[1] The request to apply the issue fee to the new Notice may be satisfied by completing and returning the new Issue Fee Transmittal Form PTOL-85(b), which includes the following language thereon: "Commissioner for Patents is requested to apply the Issue Fee and Publication Fee (if any) or re-apply any previously paid issue fee to the application identified above." Petitioner is advised that, whether a fee is indicated as being due or not, the Issue Fee Transmittal Form **must** be completed and timely submitted to avoid abandonment. Note the language in bold text on the first page of the Notice of Allowance and Fee(s) Due (PTOL-85).

UNITED STATES PATENT AND TRADEMARK OFFICE

Commissioner for Patents
United States Patent and Trademark Office
P.O. Box 1450
Alexandria, VA 22313-1450
www.uspto.gov

2-28-07

wk

In re Application of :
Schreiber et al. :
Serial Number: 10/735,706 : DECISION
Filed: December 16, 2003 : ON
For: Method For Joining Components In Titanium Aluminide by Brazing : PETITION

This is in response to the request filed July 23 ,2004 and October 25, 2006, requesting permission for withdrawal as attorney from the above-identified application.

The Commissioner of Patents and Trademarks requires that there be at least 30 days between approval of withdrawal and the later of the expiration date of a time period for reply or the expiration date of the period which can be obtained by a petition and fee for extension of time under 37 CFR 1.136(a). This is so that the applicant will have sufficient time to obtain other representation or take other action. If a period has been set for reply and the period may be extended without a showing of cause pursuant to 37 CFR 1.136(a) by filing a petition for extension of time and fee, the practitioner will not be required to seek such extension of time for withdrawal to be approved. In such a situation, however, withdrawal will not be approved unless at least 30 days would remain between the date of approval and the last date on which such a petition for extension of time and fee could properly be filed.

In this case there is less than thirty days between approval of withdrawal of the current attorney of record and the expiration date of a time response period.

The Request is **Denied**.

Jacqueline Stone, Director
Technology Center 1700
Chemical and Materials Engineering

J.Scott Davidson
DAVIDSON BERQUIST KLIMA & JACKSON LLP
4501 North Fairfax Drive, Suite 920
Arlington VA 22203

UNITED STATES PATENT AND TRADEMARK OFFICE

Commissioner for Patents
United States Patent and Trademark Office
P.O. Box 1450
Alexandria, VA 22313-1450
www.uspto.gov

TIMOTHY J. K_LIMA, ESQ.
HARBIN KING & KLIMA
500 NINTH STREET SE
WASHINGTON, DC 20003

COPY MAILED

NOV 0 6 2008

OFFICE OF PETITIONS

In re Application of :
Karl Schreiber et al. :
Application No. 10/735,706 : ON PETITION
Filed: December 16, 2003 :
Attorney Docket No. **2560-0415** :

This is a decision on the petition filed October 17, 2008, which is being treated under 37 CFR 1.181, to withdraw the holding of abandonment.

The petition under 37 CFR 1.181 is **GRANTED**.

This application became abandoned August 28, 2006 for failure to file a timely response to the Final Office Action mailed May 25, 2006. Accordingly, a Notice of Abandonment was mailed July 31, 2008.

Petitioner claims that the Final Office Action mailed May 25, 2006 was never received in that the Office Action was mailed to a previous address even though a change of address, which was filed with a withdrawal of attorney that was not approved, was filed July 23, 2004. Petitioners argue that even if the Request to Withdraw was was denied, the Change of Address was appropriately filed by an attorney of record and such Change of Address should have been entered by the Patent Office.

A review of the file confirms that the address change was filed on July 23, 2004 by an attorney of record and that the USPTO records were not updated. While the file reveals that the Final Office Action was returned by the USPTO as undeliverable, petitioners have effectively demonstrated their diligent efforts to update the address and to ensure that correspondence mailed from the USPTO was properly addressed.

The Final Office Action was mailed to the wrong address and as petitioners claim, not received. In view of the above, no petition fees are due and none have been charged.

The Notice of Abandonment is withdrawn and this matter is being referred to Technology Center 1725 for a re-mailing of the Final Office Action and for a restarting of the period for response.

Telephone inquiries concerning this matter may be directed to the undersigned Petitions Attorney at (571) 272-3212.

Patricia Faison-Ball

Patricia Faison-Ball
Senior Petitions Attorney
Office of Petitions

UNITED STATES PATENT AND TRADEMARK OFFICE

Commissioner for Patents
United States Patent and Trademark Office
P.O. Box 1450
Alexandria, VA 22313-1450
www.uspto.gov

HARNESS, DICKEY & PIERCE, P.L.C.
P.O. BOX 8910
RESTON, VA 20195

RECEIVED

DEC 19 2008

OFFICE OF PETITIONS

In re Application of :
Thomas Brandenborg :
Application No. 10/735,713 : ON PETITION
Filed: December 16, 2003 :
Attorney Docket No. 45900-000449/US/DVA :

This is a decision on the petition under the unintentional provisions of 37 CFR 1.137(b), filed November 4, 2008, to revive the above-identified application.

The petition is **GRANTED**.

The application became abandoned for failure to file a proper reply to the non-final Office action mailed, October 17, 2007, which set a shortened statutory period for reply of three (3) months. On April 16, 2008 a 3-month extension of time was filed, therefore the application became abandoned on April 18, 2008.

The petition satisfies the requirements of 37 CFR 1.137(b) in that petitioner has supplied (1) the reply in the form of an amendment, (2) the petition fee of $1,620, and (3) an adequate statement of unintentional delay.

Telephone inquiries concerning this decision should be directed to Alicia Kelley at (571) 272-6059.

This application is being referred to Technology Center 2168 for further examination on the merits.

/SDB/

Sherry D. Brinkley
Petitions Examiner
Office of Petitions

UNITED STATES PATENT AND TRADEMARK OFFICE

Commissioner for Patents
United States Patent and Trademark Office
P. O. Box 1450
Alexandria, VA 22313-1450
www.uspto.gov

FISH & RICHARDSON P.C.
P.O. BOX 1022
MINNEAPOLIS, MN 55440-1022

COPY MAILED

JUL 02 2007

OFFICE OF PETITIONS

In re Application of :
Hideaki Kuwabara et al :
Application No. 10/735,767 : ON PETITION
Filed: December 16, 2003 :
Attorney Docket No. 12732-189001

This is a decision on the petition, filed June 29, 2007 under 37 CFR 1.313(c)(2) to withdraw the above-identified application from issue after payment of the issue fee.

The petition is **GRANTED**.

The above-identified application is withdrawn from issue for consideration of a submission under 37 CFR 1.114 (request for continued examination). See 37 CFR 1.313(c)(2).

Petitioner is advised that the issue fee paid on June 22, 2007 in the above-identified application cannot be refunded. If, however, the above-identified application is again allowed, petitioner may request that it be applied towards the issue fee required by the new Notice of Allowance.[1]

The file does not indicate a change of address has been submitted, although the address given on the petition differs from the address of record. If appropriate, a change of address should be filed in accordance with MPEP 601.03. A courtesy copy of this decision is being mailed to the address given on the petition; however, the Office will mail all future correspondence solely to the address of record.

Telephone inquiries should be directed to Irvin Dingle at (571) 272-3210.

This matter is being referred to Technology Center AU 2822 for processing of the request for continued examination under 37 CFR 1.114 and for consideration of the concurrently filed Information Disclosure Statement.

Irvin Dingle
Petitions Examiner
Office of Petitions

cc: Barbara Benoit
Fish & Richardson
1425 K Street, N.W., 11th Floor
Washington, DC 20005-3500

[1] The request to apply the issue fee to the new Notice may be satisfied by completing and returning the new Issue Fee Transmittal Form PTOL-85(b), which includes the following language thereon: Commissioner for Patents is requested to apply the Issue Fee and Publication Fee (if any) or re-apply any previously paid issue fee to the application identified above. Petitioner is advised that, whether a fee is indicated as being due or not, the Issue Fee Transmittal Form **must** be completed and timely submitted to avoid abandonment. Note the language in bold text on the first page of the Notice of Allowance and Fee(s) Due (PTOL-85).

UNITED STATES PATENT AND TRADEMARK OFFICE
UNDER SECRETARY OF COMMERCE FOR INTELLECTUAL PROPERTY AND
DIRECTOR OF THE UNITED STATES PATENT AND TRADEMARK OFFICE
WASHINGTON, DC 20231
www.uspto.gov

Robert C. Curfiss
Jackson Walker L.L.P.
Suite 2100
112 E. Pecan Street
San Antonio, TX 78205

MAILED

JUN 18 2004

Director's Office
Group 3700

In re Application of:
Richard L. Garrison
Application No.10/735792
Filed: December 12, 2003
For: EXTERNAL PRESSURE GARMENT IN COMBINATION WITH A COMPLEMENTARY POSITIVE PRESSURE VENTILATOR FOR PULMOCARDIAC ASSISTANCE

DECISION REGARDING
WITHDROWAL OF ATTORNEY

By papers filed on May 21, 2004, counsel has petitioned to withdraw as attorney of record in this application.

The petition is DISMISSED.

Attention is invited to MPEP 402.06 and 37 CFR 10.40(c). A petition to withdraw as attorney or agent of record should (1) should indicate the last known mailing address of the applicant, (2) should be signed by all members of the firm or indicate on its face that the member of the firm signing the petition has the authority to withdraw on behalf of all members of the firm, and (3) state the reason(s) for withdrawal as set forth in 37 CFR 10.40(c). The instant petition does not comply with 3 above.

The petition to withdraw as attorney may be renewed if such is done seasonably.

PETITION DISMISSED.

/Richard A. Bertsch/

Richard A. Bertsch, Director
Technology Center 3700
(703) 308-0975

rt/6-17-04

UNITED STATES PATENT AND TRADEMARK OFFICE

UNITED STATES DEPARTMENT OF COMMERCE
United States Patent and Trademark Office
Address: COMMISSIONER FOR PATENTS
P.O. Box 1450
Alexandria, Virginia 22313-1450
www.uspto.gov

APPL NO.	FILING OR 371 (c) DATE	ART UNIT	FIL FEE REC'D	ATTY.DOCKET NO	DRAWINGS	TOT CLMS	IND CLMS
10/735,803	12/12/2003	2871	806	B-5325 621558-0	16	22	3

CONFIRMATION NO. 3872

CORRECTED FILING RECEIPT

OC000000012746774

Richard P. Berg, Esq.
c/o LADAS & PARRY
Suite 2100
5670 Wilshire Boulevard
Los Angeles, CA 90036-5679

Date Mailed: 05/24/2004

Receipt is acknowledged of this regular Patent Application. It will be considered in its order and you will be notified as to the results of the examination. Be sure to provide the U.S. APPLICATION NUMBER, FILING DATE, NAME OF APPLICANT, and TITLE OF INVENTION when inquiring about this application. Fees transmitted by check or draft are subject to collection. Please verify the accuracy of the data presented on this receipt. **If an error is noted on this Filing Receipt, please write to the Office of Initial Patent Examination's Filing Receipt Corrections, facsimile number 703-746-9195. Please provide a copy of this Filing Receipt with the changes noted thereon. If you received a "Notice to File Missing Parts" for this application, please submit any corrections to this Filing Receipt with your reply to the Notice. When the USPTO processes the reply to the Notice, the USPTO will generate another Filing Receipt incorporating the requested corrections (if appropriate).**

Applicant(s)

Ju-Long Lee, Hsinchu, TAIWAN;
Yi-Hsiang Lin, Taipei, TAIWAN;

Assignment For Published Patent Application

AU Optronics Corp.;

Domestic Priority data as claimed by applicant

Foreign Applications

TAIWAN 92103274 02/18/2003

If Required, Foreign Filing License Granted: 03/23/2004

Projected Publication Date: 09/02/2004

Non-Publication Request: No

Early Publication Request: No

Title

Repair method for defects in data lines and flat panel display incorporating the same

Preliminary Class

349

LICENSE FOR FOREIGN FILING UNDER
Title 35, United States Code, Section 184
Title 37, Code of Federal Regulations, 5.11 & 5.15

GRANTED

The applicant has been granted a license under 35 U.S.C. 184, if the phrase "IF REQUIRED, FOREIGN FILING LICENSE GRANTED" followed by a date appears on this form. Such licenses are issued in all applications where the conditions for issuance of a license have been met, regardless of whether or not a license may be required as set forth in 37 CFR 5.15. The scope and limitations of this license are set forth in 37 CFR 5.15(a) unless an earlier license has been issued under 37 CFR 5.15(b). The license is subject to revocation upon written notification. The date indicated is the effective date of the license, unless an earlier license of similar scope has been granted under 37 CFR 5.13 or 5.14.

This license is to be retained by the licensee and may be used at any time on or after the effective date thereof unless it is revoked. This license is automatically transferred to any related applications(s) filed under 37 CFR 1.53(d). This license is not retroactive.

The grant of a license does not in any way lessen the responsibility of a licensee for the security of the subject matter as imposed by any Government contract or the provisions of existing laws relating to espionage and the national security or the export of technical data. Licensees should apprise themselves of current regulations especially with respect to certain countries, of other agencies, particularly the Office of Defense Trade Controls, Department of State (with respect to Arms, Munitions and Implements of War (22 CFR 121-128)); the Office of Export Administration, Department of Commerce (15 CFR 370.10 (j)); the Office of Foreign Assets Control, Department of Treasury (31 CFR Parts 500+) and the Department of Energy.

NOT GRANTED

No license under 35 U.S.C. 184 has been granted at this time, if the phrase "IF REQUIRED, FOREIGN FILING LICENSE GRANTED" DOES NOT appear on this form. Applicant may still petition for a license under 37 CFR 5.12, if a license is desired before the expiration of 6 months from the filing date of the application. If 6 months has lapsed from the filing date of this application and the licensee has not received any indication of a secrecy order under 35 U.S.C. 181, the licensee may foreign file the application pursuant to 37 CFR 5.15(b).

UNITED STATES PATENT AND TRADEMARK OFFICE

Commissioner for Patents
United States Patent and Trademark Office
P.O. Box 1450
Alexandria, VA 22313-1450
www.uspto.gov

LAW OFFICE OF DONALD L. WENSKAY
P.O. BOX 7206
RANCO SANTA FE, CA 92067

COPY MAILED

JAN 10 2008

OFFICE OF PETITIONS

In re Application of	:	
Kudo et al.	:	
Application No. 10/735,837	:	DECISION ON PETITION
Filed: December 15, 2003	:	
Attorney Docket No. JP920020233US1	:	

This is a decision on the petition under the unintentional provisions of 37 CFR 1.137(b), filed December 6, 2007, to revive the above-identified application.

The petition is **GRANTED**.

The petition satisfies the requirements of 37 CFR 1.137(b) in that petitioner has supplied (1) the reply in the form of an Amendment, (2) the petition fee, and (3) a proper statement of unintentional delay.

Telephone inquiries concerning this decision should be directed to the undersigned at (571) 272-3206.

This matter is being referred to Technology Center 2168 for further examination on the merits.

Liana Walsh
Petitions Examiner
Office of Petitions

UNITED STATES PATENT AND TRADEMARK OFFICE

Commissioner for Patents
United States Patent and Trademark Office
P.O. Box 1450
Alexandria, VA 22313-1450
www.uspto.gov

Paper No.

PILLSBURY WINTHROP, LLP
P.O. BOX 10500
MCLEAN, VA 22102

COPY MAILED

SEP 2 9 2004

OFFICE OF PETITIONS

In re Application of :
Kentaro Sekiyama : DECISION ON
Application No. 10/735,853 : PETITION
Filed: December 16, 2003 :
Attorney Docket No. 061069-0307278 :

This is a decision on the "PETITION TRAVERSING NOTICE TO FILE MISSING ITEM(S) AND, IN THE ALTERNATIVE, COMPLETE RESPONSE TO NOTICE TO FILE MISSING PARTS, TWO MONTHS EXTENDED," filed August 10, 2004.

Application papers in the above-identified application were deposited on December 16, 2003. On April 28, 2004, the Office of Initial Patent Examination mailed a "Notice to File Missing Parts of Nonprovisional Application," requiring applicant to submit the following missing items: the statutory basic filing fee; an oath or declaration; a late surcharge under § 1.16(l); an English translation of the specification and a statement that the translation is accurate; the $130 fee under § 1.17(i); and any additional claim fees which may be due. On June 15, 2004, applicant filed a response to this Notice.

However, on July 27, 2004, the Office of Initial Patent Examination mailed a "Withdrawal of Previously Sent Notice," notifying applicant that the Notice mailed April 28, 2004 was mailed in error and was withdrawn. A corrected Notice, setting forth a new period for reply, was enclosed. The corrected "Notice of Omitted Item(s) in a Nonprovisional Application," notified applicant that a filing date had been accorded to the application; however, page 49 of the specification appeared to have been omitted. In response, applicant timely filed the instant petition.

On instant petition, applicant asserts that page 49 of the English translation of the specification was filed on June 15, 2004. Petitioner states that, in support thereof, they are submitting the Patent Office date-stamped receipt evidencing that the Office received the entire specification/claims, including page 49, on June 15, 2004. In addition, applicant provides another copy of the English translation of the specification. Applicant further states that, in the alternative, please treat the papers filed August 10, 2004 as a further response to the Notice mailed April 28, 2004 and accept this response as timely with a two-month extension of time.

The Office will accord a filing date to an application meeting the requirements of 35 U.S.C. 111(a), even though some or all of the application papers, including the written description and the claims, are in a language other than English and hence does not comply with 37 CFR 1.52. A review of the application file reveals that the application as filed, though in Japanese, was entitled to and was accorded a filing date of December 16, 2003. Further, the application as filed included "page 49" of the specification, albeit in Japanese.

However, a review of the application file further reveals that page 49 is not among the papers filed on June 15, 2004 (i.e., the English translation filed in reply to the "Notice to File Missing Parts of Nonprovisional Application). Moreover, petitioner's evidence is not sufficient to show that the page was among the papers filed on June 15, 2004, but misplaced by the Office. The copy of the receipt presented does not bear a USPTO date-stamp. Thus, page 49 of the English translation is being treated as first submitted on August 10, 2004.

Nonetheless, the "Withdrawal of Previously Sent Notice," mailed July 27, 2004, was sent in error to the extend that it withdrew the requirements set forth in the "Notice to File Missing Parts of Nonprovisional Application," mailed April 28, 2004. A review of the application file supports a conclusion that the missing items were required. On June 15, 2004, applicant timely responded with an incomplete response. As the extendable period for reply continued to run, on the date of filing of the petition and response to Notice filed August 10, 2004 (and extension of time), the response may be accepted as timely filed on August 10, 2004.

In view thereof, the petition is GRANTED. Given the basis for granting the petition, the petition fee is being refunded to Deposit Account No. 03-3975, as authorized.

The application is being forwarded to the Office of Initial Patent Examination (OIPE) for:

- further processing with a filing date of December 16, 2003, using the application papers received in the Office on that date and the English translations thereof filed June 15, 2004; and
- processing of the response to the Notice to File Missing Parts Mailed April 28, 2004, including page 49 of the English translation, submitted on August 10, 2004.

Telephone inquiries specific to this decision should be directed to the undersigned at (571) 272-3219.

Nancy Johnson
Senior Petitions Attorney
Office of Petitions

UNITED STATES PATENT AND TRADEMARK OFFICE

Commissioner for Patents
United States Patent and Trademark Office
P.O. Box 1450
Alexandria, VA 22313-1450
www.uspto.gov

WENDEROTH LIND & PONACK LLP
2033 K STREET NW, SUITE 800
WASHINGTON, DC 20006-1021

COPY MAILED

NOV 09 2005

OFFICE OF PETITIONS

In re Application of	:	
Mitsuaki Oshima	:	
Application No. 10/735,925	:	DECISION GRANTING PETITION
Filed: December 16, 2003	:	UNDER 37 CFR 1.313(c)(2)
Attorney Docket No. 2003_1847	:	

This is a decision on the petition, filed November 3, 2005, under 37 CFR 1.313(c)(2) to withdraw the above-identified application from issue after payment of the issue fee.

The petition is **GRANTED**.

The above-identified application is withdrawn from issue for consideration of a submission under 37 CFR 1.114 (request for continued examination). See 37 CFR 1.313(c)(2).

Petitioner is advised that the issue fee paid on September 19, 2005 in the above-identified application cannot be refunded. If, however, the above-identified application is again allowed, petitioner may request that it be applied towards the issue fee required by the new Notice of Allowance.[1]

Telephone inquiries should be directed to the undersigned at (571) 272-3218.

This matter is being referred to Technology Center AU 2684 for processing of the request for continued examination under 37 CFR 1.114 and for consideration of the Information Disclosure Statement.

Frances Hicks
Petitions Examiner
Office of Petitions

---

[1] *The request to apply the issue fee to the new Notice may be satisfied by completing and returning the new Issue Fee Transmittal Form PTOL-85(b) (along with any balance due or the amount due at the time of payment), which includes the following language thereon: "Commissioner for Patents is requested to apply the Issue Fee and Publication Fee (if any) or re-apply any previously paid issue fee to the application identified above." Petitioner is advised that, whether a fee is indicated as being due or not, the Issue Fee Transmittal Form* ***must*** *be completed and timely submitted to avoid abandonment. Note the language in bold text on the first page of the Notice of Allowance and Fee(s) Due (PTOL-85).*

UNITED STATES PATENT AND TRADEMARK OFFICE

Commissioner for Patents
United States Patent and Trademark Office
P.O. Box 1450
Alexandria, VA 22313-1450
www.uspto.gov

COPY MAILED

JUN 0 2 2006

OFFICE OF PETITIONS

OSHA LIANG L.L.P.
1221 MCKINNEY STREET
SUITE 2800
HOUSTON TX 77010

In re Application of :
Tadahiro Naitoh et al :
Application No. 10/735,935 : ON PETITION
Filed: December 15, 2003 :
Attorney Docket No. 04536.027001 :

This is a decision on the petition, filed May 25, 2006, under 37 CFR 1.313(c)(2) to withdraw the above-identified application from issue after payment of the issue fee.

The petition is **GRANTED**.

The above-identified application is withdrawn from issue for consideration of a submission under 37 CFR 1.114 (request for continued examination). See 37 CFR 1.313(c)(2).

Petitioner is advised that the issue fee paid on May 25, 2006 in the above-identified application cannot be refunded. If, however, the above-identified application is again allowed, petitioner may request that it be applied towards the issue fee required by the new Notice of Allowance.[1]

Telephone inquiries should be directed to the undersigned at (571) 272-3208.

The examiner of Technology Center AU 2189 will consider the request for continued examination under 37 CFR 1.114.

Karen Creasy

Karen Creasy
Petitions Examiner
Office of Petitions

[1] The request to apply the issue fee to the new Notice may be satisfied by completing and returning the new Issue Fee Transmittal Form PTOL-85(b), which includes the following language thereon: "Commissioner for Patents is requested to apply the Issue Fee and Publication Fee (if any) or re-apply any previously paid issue fee to the application identified above." Petitioner is advised that, whether a fee is indicated as being due or not, the Issue Fee Transmittal Form **must** be completed and timely submitted to avoid abandonment. Note the language in bold text on the first page of the Notice of Allowance and Fee(s) Due (PTOL-85).

UNITED STATES PATENT AND TRADEMARK OFFICE

COMMISSIONER FOR PATENTS
UNITED STATES PATENT AND TRADEMARK OFFICE
P.O. BOX 1450
ALEXANDRIA, VA 22313-1450
www.uspto.gov

Paper No. _____

Date : June 2, 2006

TO : Director, Office of Patent Publication

FROM : Office of the Deputy Commissioner
for Patent Examination Policy

SUBJECT : Withdrawal from Issue of

Applicant(s) :Tadahiro Naitoh et al
Application No. :10/735,935
Filed :December 15, 2003

The above-identified application has been assigned Patent No. 7,062,152 and an issue date of June 13, 2006.

It is hereby directed that this application be withdrawn from issue at the request of the applicant.

Do not refund the issue fee.

The following erratum should be published in the Official Gazette if the above-identified application is published in the OG of June 13, 2006:

"All reference to Patent No. 7,062,152 to Tadahiro Naitoh of Japan for DATA STORAGE AND REPRODUCTION APPARATUS STORING AND REPRODUCING MULTIMEDIA DATA appearing in the Official Gazette of June 13, 2006 should be deleted since no patent was granted."

Karen Creasy

Karen Creasy
Petitions Examiner
Office of Petitions
Office of the Deputy Commissioner
for Patent Examination Policy

cc: Paul Harrison, MDW-4B03,(FAX-273-5468)
Deneise Boyd, MDE-3D39 (FAX-273-5124)
Mary Louise McAskill, ST-8C15 (FAX 305-4372)
Niomi Farmer, ST-8C14 (FAX-305-4372)
Mary E. Johnson (Cookie), MDE-7C71 (FAX 273-0038
Duane Davis P/OPC MDE-7D89

UNITED STATES PATENT AND TRADEMARK OFFICE

Commissioner for Patents
United States Patent and Trademark Office
P.O. Box 1450
Alexandria, VA 22313-1450
www.uspto.gov

OSHA LIANG L.L.P.
1221 MCKINNEY STREET
SUITE 2800
HOUSTON TX 77010

COPY MAILED

APR 27 2007

OFFICE OF PETITIONS

In re Application of :
Naitoh et al. :
Application No. 10/735,935 :
Filed: 12-15-2003 :
Attorney Docket No. 04536.027001 :

DECISION ON PETITION

This is a decision on the petition filed January 23, 2007, to withdraw the holding of abandonment for the above-identified application.

On July 25, 2006, the Office mailed a Notice of Allowance and Fee(s) Due, which set a three-month statutory period for reply. In the absence of a timely filed response, the application was held abandoned on October 26, 2006. A Notice of Abandonment was mailed on November 29, 2006.

In the present petition, the practitioner requested that the Office withdraw the holding of abandonment due to non-receipt of the Notice of Allowance.

PETITION TO WITHDRAW THE HOLDING OF ABANDONMENT

A review of the record indicates no irregularity in the mailing of the Notice of Allowance, and in the absence of any irregularity in the mailing, there is a strong presumption that the Notice of Allowance was properly mailed to the address of record. This presumption may be overcome by a showing that the Notice of Allowance was not in fact received. The showing required to establish non-receipt of an Office communication must include a statement from the practitioner, stating that the practitioner did not receive the Office communication and attesting to the fact that a search of the file jacket and docket records indicates that the Office communication was not received. A copy of the docket record where the non-received Office communication would have been entered had it been received and docketed must be attached to and referenced in practitioner's statement. See MPEP 711.03(c)(I)(A). For example, if a three-month period for reply was set in the non-received Office communication, a copy of the docket report showing all replies docketed for a date three months from the mail date of the non-received Office communication must be submitted as documentary proof of non-receipt of the Office communication. The showing outlined above may not be sufficient if there are circumstances

that point to a conclusion that the Office communication may have been lost after receipt rather than a conclusion that the Office communication was lost in the mail (e.g. if the practitioner has a history of not receiving Office communications).

After reviewing the documents submitted on petition, the Office concludes that the showing of record is sufficient to warrant withdrawal of the holding of abandonment. The practitioner for applicants submitted copies of docket records where the Notice of Allowance would have been entered had it been received and docketed. The practitioner attested to the fact that a search of the file jacket and docket records indicated that the Notice of Allowance was not received. Accordingly, applicants presented the required showing under 37 CFR 1.181.

The petition under 37 CFR 1.181 is GRANTED. No petition fee is required.

The Office acknowledges applicants' request to apply the previously paid issue fee as payment for the fees required by the Notice of Allowance mailed on July 25, 2006.

This matter is being referred to the Office of Patent Publication.

Telephone inquiries related to this decision may be directed to the undersigned at (571) 272-3211.

Christina Tartera Donnell

Christina Tartera Donnell
Senior Petitions Attorney
Office of Petitions

UNITED STATES PATENT AND TRADEMARK OFFICE

Commissioner for Patents
United States Patent and Trademark Office
P.O. Box 1450
Alexandria, VA 22313-1450
www.uspto.gov

GREGORY FINN
FOUNDRY COTTAGE
RAMSBURY
MARLBOROUGH, WILTSHIRE SN8 2QD GB
UNITED KINGDOM

COPY MAILED
DEC 14 2006
OFFICE OF PETITIONS

In re Application of :
Finn, Gregory M. :
Application No. 10/735,939 : ON PETITION
Filed: December 15, 2003 :
Title: PORTABLE DEVICE FOR ASSISTING CHIN-UP AND DIP EXERCISES :

This is a decision on the petition under 37 C.F.R. § 1.137(b), filed December 1, 2006, to revive the above-identified application.

The petition is **GRANTED.**

The petition satisfies the conditions for revival pursuant to the provisions of 37 CFR 1.137(b) in that (1) the reply in the form of an Amendment; (2) the petition fee; and (3) the required statement of unintentional delay have been received. Accordingly, the response has been accepted as having been unintentionally delayed.

This matter is being referred to Technology Center 3700 for further examination on the merits.

Telephone inquiries regarding this decision should be directed to the undersigned at (571) 272-3206.

Liana Walsh
Petitions Examiner
Office of Petitions

UNITED STATES PATENT AND TRADEMARK OFFICE

UNITED STATES DEPARTMENT OF COMMERCE
United States Patent and Trademark Office
Address: COMMISSIONER FOR PATENTS
P.O. Box 1450
Alexandria, Virginia 22313-1450
www.uspto.gov

APPL NO.	FILING OR 371 (c) DATE	ART UNIT	FIL FEE REC'D	ATTY.DOCKET NO	DRAWINGS	TOT CLMS	IND CLMS
10/735,945	12/15/2003	2681	1644	223292	5	59	5

CONFIRMATION NO. 3703

CORRECTED FILING RECEIPT

38887
LEYDIG, VOIT & MAYER, LTD.
TWO PRUDENTIAL PLAZA, SUITE 4900
180 NORTH STETSON
CHICAGO, IL 60601-6780

OC000000013033692

Date Mailed: 06/22/2004

Receipt is acknowledged of this regular Patent Application. It will be considered in its order and you will be notified as to the results of the examination. Be sure to provide the U.S. APPLICATION NUMBER, FILING DATE, NAME OF APPLICANT, and TITLE OF INVENTION when inquiring about this application. Fees transmitted by check or draft are subject to collection. Please verify the accuracy of the data presented on this receipt. **If an error is noted on this Filing Receipt, please write to the Office of Initial Patent Examination's Filing Receipt Corrections, facsimile number 703-746-9195. Please provide a copy of this Filing Receipt with the changes noted thereon. If you received a "Notice to File Missing Parts" for this application, please submit any corrections to this Filing Receipt with your reply to the Notice. When the USPTO processes the reply to the Notice, the USPTO will generate another Filing Receipt incorporating the requested corrections (if appropriate).**

Applicant(s)

Pradeep Bahl, Redmond, WA;
Amer Hassan, Kirkland, WA;

Assignment For Published Patent Application

Microsoft Corporation, Redmond, WA;

Domestic Priority data as claimed by applicant

This appln claims benefit of 60/480,434 06/19/2003

Foreign Applications

If Required, Foreign Filing License Granted: 03/29/2004

Projected Publication Date: 12/23/2004

Non-Publication Request: No

Early Publication Request: No

Title

Wireless transmission interference avoidance on a device capable of carrying out wireless

network communications

Preliminary Class

455

LICENSE FOR FOREIGN FILING UNDER
Title 35, United States Code, Section 184
Title 37, Code of Federal Regulations, 5.11 & 5.15

GRANTED

The applicant has been granted a license under 35 U.S.C. 184, if the phrase "IF REQUIRED, FOREIGN FILING LICENSE GRANTED" followed by a date appears on this form. Such licenses are issued in all applications where the conditions for issuance of a license have been met, regardless of whether or not a license may be required as set forth in 37 CFR 5.15. The scope and limitations of this license are set forth in 37 CFR 5.15(a) unless an earlier license has been issued under 37 CFR 5.15(b). The license is subject to revocation upon written notification. The date indicated is the effective date of the license, unless an earlier license of similar scope has been granted under 37 CFR 5.13 or 5.14.

This license is to be retained by the licensee and may be used at any time on or after the effective date thereof unless it is revoked. This license is automatically transferred to any related applications(s) filed under 37 CFR 1.53(d). This license is not retroactive.

The grant of a license does not in any way lessen the responsibility of a licensee for the security of the subject matter as imposed by any Government contract or the provisions of existing laws relating to espionage and the national security or the export of technical data. Licensees should apprise themselves of current regulations especially with respect to certain countries, of other agencies, particularly the Office of Defense Trade Controls, Department of State (with respect to Arms, Munitions and Implements of War (22 CFR 121-128)); the Office of Export Administration, Department of Commerce (15 CFR 370.10 (j)); the Office of Foreign Assets Control, Department of Treasury (31 CFR Parts 500+) and the Department of Energy.

NOT GRANTED

No license under 35 U.S.C. 184 has been granted at this time, if the phrase "IF REQUIRED, FOREIGN FILING LICENSE GRANTED" DOES NOT appear on this form. Applicant may still petition for a license under 37 CFR 5.12, if a license is desired before the expiration of 6 months from the filing date of the application. If 6 months has lapsed from the filing date of this application and the licensee has not received any indication of a secrecy order under 35 U.S.C. 181, the licensee may foreign file the application pursuant to 37 CFR 5.15(b).

UNITED STATES PATENT AND TRADEMARK OFFICE

Commissioner for Patents
United States Patent and Trademark Office
P.O. Box 1450
Alexandria, VA 22313-1450
www.uspto.gov

6/6/07

SEAGATE TECHNOLOGY LLC
INTELLECTUAL PROPERTY DEPT. - COL2LGL
389 DISC DRIVE
LONGMONT CO 80503

In re Application of:
O'DAY, RICHARD F.
Serial No.: 10/735,971
Filed: Dec. 15, 2003
Docket: 3123-551 (16420-02103)
Title: METHOD FOR MAKING A DISC DRIVE

DECISION ON PETITION TO REVIEW RESTRICTION REQUIREMENT UNDER 37 CFR 1.144

This is a decision on the petition filed Nov. 3, 2006 to review the restriction requirement issued on Apr. 24, 2006. The petition is being considered pursuant to 37 CFR 1.181 and CFR 1.144 and no fee is required for the petition.

The petition is **GRANTED**.

In his Nov. 3, 2006 petition, the petitioner requests the examiner to withdraw the restriction requirement issued on Apr. 24, 2006 regarding combination and subcombination claims under MPEP 806.05(C) because the applicant believes that the claims are directed to the same invention, using language of varying breadth to describe the various features of the invention. The inventions of Groups I and II do not have a combination and subcombination relationship and do not represent recognized divergent subject matter. Therefore, the restriction requirement should not be maintained.

After consulting with the examiner, it was agreed that the restriction requirement would be withdrawn. An Office action on the merits including claims 22-28 was mailed on Jan. 24, 2007.

Any inquiry regarding this decision should be directed to Henry Yuen, Special Programs Examiner, at (571) 272-4856.

PETITION GRANTED

Karen M. Young

for Frederick R. Schmidt, Director
Technology Center 3700

UNITED STATES PATENT AND TRADEMARK OFFICE

Commissioner for Patents
United States Patent and Trademark Office
P.O. Box 1450
Alexandria, VA 22313-1450
www.uspto.gov

HOFFMANN-LA ROCHE INC.
PATENT LAW DEPARTMENT
340 KINGSLAND STREET
NUTLEY, NJ 07110

COPY MAILED

JUL 15 2004

OFFICE OF PETITIONS

In re Application of :
Certa, et al. :
Application No. 10/735,973 : ON PETITION
Filed: December 15, 2003 :
Attorney Docket No. 21507 :

This is a decision on the petition filed May 18, 2004, requesting that the above-identified application be accorded a filing date of December 15, 2003.

The application was deposited on December 15, 2003. However, on March 17, 2004, the Office of Initial Patent Examination (OIPE) mailed a "Notice of Incomplete Nonprovisional Application" which stated a filing date was not accorded and that the application was deposited without drawings.

In response, on May 18, 2004, the instant petition was filed.

Petitioner states the drawings were inadvertently omitted upon filing, but that "the drawings are not necessary under 35 U.S.C. 113 for an understanding of the subject matter sought to be patented. It is noted that the petition contains a statement that drawings are not necessary for an understanding of the subject matter and the petition is signed by a registered practitioner.

Additionally, it is noted that the nonprovisional application contains a process claim that includes the term "method" in it's introductory phrase and therefore drawings are not required.

MPEP 608.02 states:

> "An OIPE formality examiner should not treat an application without drawings as incomplete if drawings are not required. A drawing is not required for a filing date under 35 U.S.C. 111 and 113 if the application contains:

(A) at least one process claim including the term "process" or "method" in its introductory phrase;

Since the claims contain at least one process claim including the term "process" or "method" in its introductory phrase, drawings are not required in order to accord a filing date.

Accordingly, the petition is granted.

As the instant petition was required to accord the requested filing date, the petition fee will not be refunded.

The application will be returned to the Office of Initial Patent Examination for processing with a filing date of December 15, 2003, with zero (0) drawings received on that date.

Telephone inquiries concerning this matter may be directed to the undersigned at (703) 306-9200.

Edward J. Tannouse
Petitions Attorney
Office of Petitions
United States Patent and Trademark Office

UNITED STATES PATENT AND TRADEMARK OFFICE

Commissioner for Patents
United States Patent and Trademark Office
P.O. Box 1450
Alexandria, VA 22313-1450
www.uspto.gov

MAR 13 2006

BRIAN C. REMY
HOFFMAN-LA ROCHE, INC
PATENT LAW DEPARTMENT
340 KINGSLAND STREET
NUTLEY, NJ 07110

In re Application of	:	
Goodnow et al	:	
Serial No.: 10/735,991	:	DECISION ON PETITION
Filed: 15 December 2003	:	
Attorney Docket No.: 21366	:	

This letter is in response to the Petition under 37 C.F.R. 1.144, filed 27 December 2005, requesting review of the restriction requirement originally set forth in the communication mailed 12 May 2005 and made FINAL in the first Office action on the merits mailed 15 August 2005.

BACKGROUND

This application was filed under 35 U.S.C. 111 on 15 December 2003, and contained claims 1-36. On 12 May 2005 the examiner mailed to applicants a restriction requirement in which the 36 claims were divided into 14 groups, as follows:

Group I, claims 1, 3, 5, 14, 19, 25, 28, 30 and 33, drawn to a method of identifying compounds by contacting a test compound with a mammalian sequence #115;

Group II, claims 2, 4, 6, 15, 22, 26, 29, 31 and 34, drawn to a method of identifying compounds by contacting a sequence #115 ligand with a mammalian sequence #115;

Group III, claims 7-8, 16, 27 and 32, drawn to a method for identifying compounds by contacting a test cell with a mammalian sequence #115 and measuring cAMP levels;

Group IV, claims 7, 9, 16, 27 and 32, drawn to a method for identifying compounds by contacting a test cell with a mammalian sequence #115 and measuring cytoplasmic Ca^{+2} levels;

Group V, claims 7, 10-11, 16, 27 and 32, drawn to a method for identifying compounds by contacting a test compound with a cell expressing a mammalian sequence #115 and measuring the expression of a reporter gene;

Group VI, claims 7, 12, 16, 27 and 32, drawn to a method for identifying compounds by contacting a test compound with a cell expressing mammalian sequence #115 and measuring inosital 1,4,5-triphosphate levels;

Group VII, claims 7, 13, 16, 27 and 32, drawn to a method for identifying compounds by contacting a test cell with mammalian sequence #115 and measuring 1,2-diacylglycerol levels;

Group VIII, claims 17-18, drawn to a pharmaceutical formulation that modulates the activity of mammalian sequence #115;

Group IX, claim 20, drawn to a method of treating obesity comprising administering compounds which modulate the activity of mammalian sequence #115;

Group X, claim 21, drawn to a method of treating cachexia by administering a composition that binds to sequence #115;

Group XI, claim 23, drawn to a method of treating obesity by administering a pharmaceutical composition which alters the binding of sequence #115 to the mammalian sequence #115;

Group XII, claim 24, drawn to a method of treating cachexia by administering a pharmaceutical composition which alters the binding of sequence #115 to mammalian #115;

Group XII, claim 35, drawn to an antibody that recognizes SEQ ID NO: 6;

Group XIV, claim 36, drawn to an antibody that recognizes SEQ ID NO: 5.

Appropriate arguments for distinctness between groups were set forth.

On 9 June 2005 applicants responded to the restriction requirement by provisionally electing with traverse Group I, claims 1, 3, 5, 14, 19, 25, 28, 30, and 33, and arguing lack of burden on the Office among other things.

On 15 August 2005 the examiner mailed to applicants a first Office action on the merits in which the examiner acknowledged the election and replied to the traversal of the restriction requirement and made the requirement FINAL. The application was objected to for lack of sequence compliance and claims 1, 3, 5, 14, 19, 25, 28, 30 and 33 were rejected under 35 U.S.C. 112, second paragraph, as indefinite for various reasons. The claims were also rejected under 35 U.S.C. 112, first paragraph, for lack of enablement and lack of written description. The claims were further rejected under 35 U.S.C. 102(b) as anticipated by Glucksmann et al and under 35 U.S.C. 102(e) as anticipated by Liaw et al.

On 15 December 2005 applicants filed an amendment in response to the Office action in which applicants replaced the term "mammalian #115" with SEQ ID NO. 6 indicating that this is the amino acid sequence of the human protein. SEQ ID NO. 5 was indicated to be the nucleic acid sequence encoding said human protein of SEQ ID NO. 6.

On 21 December 2005 applicant filed a supplemental amendment in which they resubmitted two figures and the sequence listing to comply with the requirements of 37 C.F.R. 1.821 - 1.825.

On 27 December 2005 applicants filed this Petition under 37 C.F.R. 1.144 requesting Director review of the restriction requirement.

DISCUSSION

Applicants traverse the examiner's restriction requirement on the basis of three central points.

(1) All Groups are Related and Classified in the Same Class and Subclass

Applicants emphasize that all of the 14 groups into which the examiner has restricted the original 36 claims are classified in exactly the same class and subclass: Class 514, subclass 44.

Applicants note that while the examiner stated that the inventions are unrelated because they have different modes of operation, different functions, different effects, a review of the claims shows that most, if not all, of the claims are related. Applicants especially note that each of the claims requires the use of the same mammalian sequence #115.

Applicants' arguments have been fully considered and are deemed persuasive in part. In and of itself, the classification of inventions in the same class and subclass does not determine whether inventions are independent and distinct or not. It is but one factor which is weighed in the determination of whether inventions are independent and distinct. However, in the instant fact situation it appears that the assays defined by independent claims 1and 7 are so related that a reference disclosing one method could more likely than not be used to show the other method to be obvious since the same mammalian sequence #115 is used in each method. Furthermore, the use of a purified protein or the use of a cell expressing said protein would normally be considered obvious variations of the method. The measurement of cAMP or cytoplasmic calcium or cAMP responsive element are routine assays for measuring the effect of ligands and test compounds on G-protein coupled receptors.

(2) The Examiner Has Already Performed a Search Covering Most Groups

Applicants argue that by performing a sequence search of mammalian sequence #115 (nucleic acid search) combined with a text search of G-protein coupled receptors, the examiner has already effectively searched most of the identified groups.

This argument has been fully considered and is deemed persuasive. The key element of each of the different groups defining a method requires the use of the same mammalian sequence #115. However, it was unclear to the examiner whether or not sequence #115 was a protein or polynucleotide sequence. Therefore, the examiner performed a sequence search of SEQ ID NO. 5, the polynucleotide, only.

(3) Maintaining the Restriction Requirement Would Be Unfair to Applicants

Applicants urge that it would be quite unfair to them if they had to file 13 divisional applications and pay over $135,000 in filing-associated fees, issue fees, and maintenance fees alone to prosecute, obtain, and maintain 13 divisional patents on all the pending claims in the current application. Applicants' argument has been fully considered but is not directed to the merits of whether the claimed inventions are independent and/or distinct and is, therefore, dismissed

DECISION

For the above reasons the Petition is **GRANTED-IN-PART.**

The restriction requirement set forth is modified, as follows:

Group I, claims 1, 3, 5, 7-14, 16, 27, 30 and 32, directed to a method of identifying compounds useful for modulating body weight comprising the use of a polynucleotide having 85 % homology with SEQ ID NO. 5;

Group II, claims 1, 3, 5, 7-14, 16, 27, 30 and 32, directed to a non-competitive method of identifying compounds useful for modulating body weight comprising the use of a protein having 85% homology with SEQ ID NO. 6;

Group III, claims 2, 4, 6, 15, 26, 29, 31 and 34, directed to a competitive method for identifying compounds useful for modulating body weight comprising the use of a protein having 85% homology to SEQ ID NO. 6;

Group IV, claims 2, 4, 6, 15, 26, 29, 31 and 34, directed to a competitive method for identifying compounds useful for modulating body weight comprising the use of a polynucleotide having 85% homology to SEQ ID. NO. 5;

Group V, claims 17-19, 22, and 33 - 34, directed to a weight modulating pharmaceutical composition and method for preparing same;

Group VI, claims 20 and 23, directed to a method for treating obesity;

Group VII, claims 21 and 24, directed to a method for treating cachexia;

Group VIII, claims 35 - 36, directed to an antibody against the polypeptide of SEQ ID NO. 5.

Applicants' election of previous Group I is maintained as effective for Group I, as now modified, and all claims of Group I will be considered by the examiner in preparing the next Office action. The application will be forwarded to the examiner for consideration of applicants' reply filed 15 December 2005.

Any request for reconsideration of this decision must be filed within two (2) months of the mailing date of this decision in order to be considered timely.

Should there by any questions regarding this decision, please contact Special Program Examiner, William R. Dixon, Jr. by letter addressed to Director, TC 1600, at the address listed above, or by telephone at 571-272-0519 or by facsimile sent to the general Office facsimile number, 571-273-8300.

George C. Elliott
Director, Technology Center 1600

UNITED STATES PATENT AND TRADEMARK OFFICE

UNITED STATES DEPARTMENT OF COMMERCE
United States Patent and Trademark Office
Address: COMMISSIONER FOR PATENTS
P.O. Box 1450
Alexandria, Virginia 22313-1450
www.uspto.gov

APPL NO.	FILING OR 371 (c) DATE	ART UNIT	FIL FEE REC'D	ATTY.DOCKET NO	DRAWINGS	TOT CLMS	IND CLMS
10/735,993	12/15/2003	2131	900	JP920030014US1	9	7	1

CONFIRMATION NO. 2964

25299
IBM CORPORATION
PO BOX 12195
DEPT 9CCA, BLDG 002
RESEARCH TRIANGLE PARK, NC 27709

UPDATED FILING RECEIPT

OC000000012802190

Date Mailed: 05/28/2004

Receipt is acknowledged of this regular Patent Application. It will be considered in its order and you will be notified as to the results of the examination. Be sure to provide the U.S. APPLICATION NUMBER, FILING DATE, NAME OF APPLICANT, and TITLE OF INVENTION when inquiring about this application. Fees transmitted by check or draft are subject to collection. Please verify the accuracy of the data presented on this receipt. **If an error is noted on this Filing Receipt, please write to the Office of Initial Patent Examination's Filing Receipt Corrections, facsimile number 703-746-9195. Please provide a copy of this Filing Receipt with the changes noted thereon. If you received a "Notice to File Missing Parts" for this application, please submit any corrections to this Filing Receipt with your reply to the Notice. When the USPTO processes the reply to the Notice, the USPTO will generate another Filing Receipt incorporating the requested corrections (if appropriate).**

Applicant(s)

Eiji Ogata, Fujiawa-shi, JAPAN;

Assignment For Published Patent Application

International Business Machines Corporation, Armonk, NY;

Domestic Priority data as claimed by applicant

Foreign Applications

JAPAN 2003-029813 02/06/2003

If Required, Foreign Filing License Granted: 03/23/2004

Projected Publication Date: 09/02/2004

Non-Publication Request: No

Early Publication Request: No

Title

Information processing apparatus for secure information recovery

Preliminary Class

713

LICENSE FOR FOREIGN FILING UNDER
Title 35, United States Code, Section 184
Title 37, Code of Federal Regulations, 5.11 & 5.15

GRANTED

The applicant has been granted a license under 35 U.S.C. 184, if the phrase "IF REQUIRED, FOREIGN FILING LICENSE GRANTED" followed by a date appears on this form. Such licenses are issued in all applications where the conditions for issuance of a license have been met, regardless of whether or not a license may be required as set forth in 37 CFR 5.15. The scope and limitations of this license are set forth in 37 CFR 5.15(a) unless an earlier license has been issued under 37 CFR 5.15(b). The license is subject to revocation upon written notification. The date indicated is the effective date of the license, unless an earlier license of similar scope has been granted under 37 CFR 5.13 or 5.14.

This license is to be retained by the licensee and may be used at any time on or after the effective date thereof unless it is revoked. This license is automatically transferred to any related applications(s) filed under 37 CFR 1.53(d). This license is not retroactive.

The grant of a license does not in any way lessen the responsibility of a licensee for the security of the subject matter as imposed by any Government contract or the provisions of existing laws relating to espionage and the national security or the export of technical data. Licensees should apprise themselves of current regulations especially with respect to certain countries, of other agencies, particularly the Office of Defense Trade Controls, Department of State (with respect to Arms, Munitions and Implements of War (22 CFR 121-128)); the Office of Export Administration, Department of Commerce (15 CFR 370.10 (j)); the Office of Foreign Assets Control, Department of Treasury (31 CFR Parts 500+) and the Department of Energy.

NOT GRANTED

No license under 35 U.S.C. 184 has been granted at this time, if the phrase "IF REQUIRED, FOREIGN FILING LICENSE GRANTED" DOES NOT appear on this form. Applicant may still petition for a license under 37 CFR 5.12, if a license is desired before the expiration of 6 months from the filing date of the application. If 6 months has lapsed from the filing date of this application and the licensee has not received any indication of a secrecy order under 35 U.S.C. 181, the licensee may foreign file the application pursuant to 37 CFR 5.15(b).

UNITED STATES PATENT AND TRADEMARK OFFICE

COMMISSIONER FOR PATENTS
UNITED STATES PATENT AND TRADEMARK OFFICE
P.O. BOX 1450
ALEXANDRIA, VA 22313-1450
www.uspto.gov

Paper No.

HEWLETT-PACKARD COMPANY
Intellectual Property
Administration
3404 E. Harmony Road
Mail Stop 35
FORT COLLINS CO 80528

COPY MAILED

AUG 07 2009

OFFICE OF PETITIONS

In re Application of :
John Richter :
Application No. 10/736,001 : ON APPLICATION FOR
Filed: December 15, 2003 : PATENT TERM ADJUSTMENT
Atty Docket No. 14012-053001/ :
50-03-034 :

This is in response to the APPLICATION FOR PATENT TERM ADJUSTMENT UNDER 37 C.F.R. § 1.705(b) filed January 27, 2009. Applicant submits that the patent term adjustment to be indicated on the patent is five hundred fifty-two (552) days, not four hundred forty-two (442) days as calculated by the Office as of the mailing of the initial determination of patent term adjustment. Applicant requests this correction in part on the basis that the Office will take in excess of three years to issue this patent[1]. In addition, applicant disputes a period of reduction of 2 days for applicant delay.

To the extent that the instant application for patent term adjustment requests reconsideration of the patent term adjustment as it relates to the Office's failure to issue the patent within 3 years of the filing date, the application for patent term adjustment under 37 CFR 1.705(b) is **DISMISSED as PREMATURE**.

[1] This calculation is based on a request for continued examination (RCE) having been filed in this application on April 2, 2007. An RCE cuts-off their ability to accumulate any additional patent term for over three year pendency. The 1.702(b) period excludes any period consumed by continued examination requested by applicant under 35 U.S.C. 132(b).

Knowledge of the actual date the patent issues is required to calculate the amount, if any, of additional patent term patentee is entitled to for Office failure to issue the patent within 3 years. See § 1.702(b). (This is true even where a request for continued examination (RCE) was filed). The computer will not undertake the § 1.702(b) calculation until the actual date of issuance of the patent has been determined. Likewise, the computer will not calculate any further Office delay under § 1.702(a)(4) or applicant delay under § 1.704(c)(10) until the actual date of issuance of the patent has been determined. As such, the Office can not make a determination on the correctness of the patent term adjustment until the patent has issued.

Requesting reconsideration of the patent term adjustment to be indicated on the patent under 37 CFR 1.705(b) based on the initial determination of patent term adjustment and a projected issuance date of the patent (or even the filing date of the request for continued examination) is premature. Accordingly, it is appropriate to dismiss as premature such a request.

Rather than file an application for patent term adjustment under 37 CFR 1.705(b) contesting the 37 CFR 1.702(b) calculation at the time of the mailing of the notice of allowance, applicant is advised that they may wait until the time of the issuance of the patent and file a request for reconsideration of the patent term adjustment pursuant to 37 CFR 1.705(d). As the USPTO does not calculate the amount of time earned pursuant to 37 CFR 1.702(b) until the time of the issuance of the patent, the Office will consider any request for reconsideration of the patent term adjustment due to an error in the calculation of 37 CFR 1.702(b) to be timely if the request for reconsideration is filed within two months of the issuance of the patent. However, as to all other bases for contesting the initial determination of patent term adjustment received with the notice of allowance, applicant must timely file an application for patent term adjustment prior to the payment of the issue fee[2].

---

[2] For example, if applicant disputes both the calculation of patent term adjustment under 37 CFR 1.702(a)(1) for Office failure to mail a first Office action or notice of allowance not later than fourteen months after the date on which the application was filed and under 37 CFR 1.702(b) for Office failure to issue a patent within three years of the actual filing date of the application, then applicant must still timely file an application for patent term adjustment prior to the payment of the issue fee to contest the calculation of Office delay in issuing a first Office action or notice of allowance. See 37 CFR 1.705(b) and 35 U.S.C. 154(b)(3)(B). A dispute as to the calculation of the §1.702(a)(1) period raised on request for

To the extent that applicant otherwise requests correction of the patent term adjustment at the time of mailing of the notice of allowance, the application for patent term adjustment is **DISMISSED**.

On December 1, 2008, the Office mailed the Determination of Patent Term Adjustment under 35 U.S.C. 154(b) in the above-identified application. The Notice stated that the patent term adjustment (PTA) to date is 442 days. On January 27, 2009, applicant timely submitted the instant application for patent term adjustment[3]. Applicant disputes a period of reduction of 2 days associated with their filing of a response after non-final Office action on August 11, 2008, three months and 2 days after the mailing of the non-final Office action on May 9, 2008.

The record supports a conclusion that the above-identified application is not subject to a terminal disclaimer.

Applicant's attention is directed to 37 CFR 1.703(f), which provides that "[t]he date indicated on any certificate of mailing or transmission under § 1.8 shall not be taken into account in this calculation" of patent term adjustment. See also, Comment 10, Changes to Implement Patent Term Adjustment under Twenty-Year Patent Term; Final Rule, 65 Fed. Reg. 54366 (September 18, 2000). Accordingly, applicant's argument on application for patent term adjustment is not found persuasive. Thus, while the date indicated on any certificate of mailing or transmission under 37 CFR 1.8 will continue to be taken into account in determining timeliness, the date of filing (37 CFR 1.6) will be the date used in a patent term adjustment calculation. Applicant may wish to consider the use of the "Express Mail Post Office to Addressee " service of the United States Postal Service (37 CFR 1.10) or facsimile transmission (37 CFR 1.6(d)) for replies to be accorded the earliest possible filing date for patent term adjustment calculations.

Alternatively, applicant may choose to mail correspondence with sufficient time to ensure that the correspondence is received in the Office (and stamped with a date of receipt) before the expiration of the three-month period. The period of reduction of 2 days associated with the August 11, 2008 filing is warranted and will not be removed.

---

reconsideration of patent term adjustment under 37 CFR 1.705(d) will be dismissed as untimely filed.

[3] PALM records indicate that the issue fee was also paid on January 27, 2009.

The Office acknowledges submission of the $200.00 fee set forth in 37 CFR 1.18(e) for consideration of the application for patent term adjustment under 37 CFR 1.705(b).

Any request for reconsideration of the patent term adjustment indicated on the patent must be timely filed within 2 months after issuance pursuant to 37 CFR 1.705(d) and must include payment of the required fee under 37 CFR 1.18(e).

Applicant is reminded that any delays by the Office pursuant to 37 CFR 1.702(a)(4) and 1.702(b) and any applicant delays under 37 CFR 1.704(c)(10) will be calculated at the time of the issuance of the patent and applicants will be notified of the revised patent term adjustment to be indicated on the patent in the Issue Notification letter that is mailed to applicant approximately three weeks prior to issuance.

The Office of Data Management has been advised of this decision. This matter is being referred to the Office of Data Management for issuance of the patent.

Telephone inquiries specific to this matter should be directed to the undersigned at (571) 272-3219.

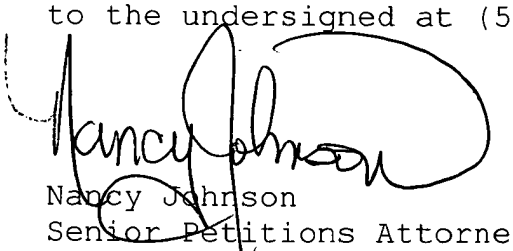

Nancy Johnson
Senior Petitions Attorney
Office of Petitions

UNITED STATES PATENT AND TRADEMARK OFFICE

Commissioner for Patents
United States Patent and Trademark Office
P.O. Box 1450
Alexandria, VA 22313-1450
www.uspto.gov

PATENT COUNSEL
APPLIED MATERIALS, INC.
Legal Affairs Department
P.O. BOX 450A
Santa Clara, CA 95052

COPY MAILED

JUL 3 0 2004

OFFICE OF PETITIONS

In re Application of :
Beaudry et al. :
Application No. 10/736,007 : ON PETITION
Filed: December 15, 2003 :
Attorney Docket No. 8034 USA L/W-C/W-C/JB1 :

This is a decision on the petition under 37 CFR 1.182, filed April 12, 2004, to change the order of the names of the inventors.

The petition is **granted**.

The order of the names of the inventors will be changed as follows:

1. Christopher Laurent Beaudry

2. Steven Verhaverbeke

Telephone inquiries should be directed to Petitions Attorney Steven Brantley at (703) 306-5683.

Charles Steven Brantley
Petitions Attorney
Office of Petitions

Attached: Corrected Filing Receipt

UNITED STATES PATENT AND TRADEMARK OFFICE

Commissioner for Patents
United States Patent and Trademark Office
P.O. Box 1450
Alexandria, VA 22313-1450
www.uspto.gov

LENOVO (US) IP LAW
1009 THINK PLACE
BUILDING ONE, 4TH FLOOR 4B6
MORRISVILLE NC 27560

MAILED

FEB 12 2009

OFFICE OF PETITIONS

In re Application of :
Eiji Ogata :
Application No. 10/736,016 : DECISION ON PETITION
Filed: December 15, 2003 :
Attorney Docket No. JP920030014US2 :

This is a decision on the petition under the unintentional provisions of 37 CFR 1.137(b), filed April 24, 2008, to revive the above-identified application.

The petition is **GRANTED**.

The application became abandoned for failure to reply in a timely manner to the non-final Office action mailed August 27, 2007, which set a shortened statutory period for reply of three (3) months. No extensions of time under the provisions of 37 CFR 1.136(a) were obtained. Accordingly, the application became abandoned on November 28, 2007. A Notice of Abandonment was mailed April 10, 2008.

The petition satisfies the requirements of 37 CFR 1.137(b) in that petitioner has supplied (1) the reply in the form of an Amendment, (2) the petition fee of $1,540.00, and (3) an adequate statement of unintentional delay.

It is not apparent whether the statement of unintentional delay was signed by a person who would have been in a position of knowing that the **entire** delay in filing the required reply from the due date for the reply until the filing of a grantable petition pursuant to 37 CFR 1.137(b) was unintentional. Nevertheless, in accordance with 37 CFR 10.18, the statement is accepted as constituting a certification of unintentional delay. However, in the event that petitioner has no knowledge that the delay was unintentional, petitioner must make such an inquiry to ascertain that, in fact, the delay was unintentional. If petitioner discovers that the delay was intentional, petitioner must notify the Office. It is not apparent whether the person signing the instant petition was ever given a power of attorney or authorization of agent to prosecute this patent. In accordance with 37 CFR 1.34(a), the signature appearing on the petition shall constitute a representation to the United States Patent and Trademark Office that he/she is authorized to represent the particular party in whose behalf he/she acts. While, a courtesy copy of this decision is being mailed to the person signing the instant petition, all future correspondence will be directed to the address currently of record until such time as appropriate instructions are received to the contrary.

Telephone inquiries concerning this decision should be directed to Joan Olszewski at (571) 272-7751.

This application is being referred to Technology Center AU 2136 for appropriate action by the Examiner in the normal course of business on the reply received.

/Liana Walsh/
Liana Walsh
Petitions Examiner
Office of Petitions

cc: Anthony P. Ng
Dillon & Yudell LLP
8911 N. Capital of TX Hwy., Suite 2110
Austin, TX 78759

UNITED STATES PATENT AND TRADEMARK OFFICE

UNITED STATES DEPARTMENT OF COMMERCE
United States Patent and Trademark Office
Address: COMMISSIONER FOR PATENTS
P.O. Box 1450
Alexandria, Virginia 22313-1450
www.uspto.gov

Novak Druce + Quigg LLP
CityPlace Tower, 525 Okeechobee Blvd.
Fifteenth-Floor
WEST PALM BEACH, FL 33401

Mail Date: 04/21/2010

Applicant	: Thomas E. Creamer	: DECISION ON REQUEST FOR
Patent Number	: 7653692	: RECALCULATION of PATENT
Issue Date	: 01/26/2010	: TERM ADJUSTMENT IN VIEW
Appliction No	: 10/736,025	: OF WYETH AND NOTICE OF INTENT TO
Filed	: 12/15/2003	: ISSUE CERTIFICATE OF CORRECTION
		:

The Request for Recalculation is **GRANTED** to the extent indicated.

The patent term adjustment has been determined to be **1118** days. The USPTO will *sua sponte* issue a certificate of correction reflecting the amount of PTA days determined by the recalculation.

Prior to the issuance of the certificate of correction, the USPTO will afford patentee an opportunity to be heard and request reconsideration. Accordingly, patentee has **one month or thirty (30) days**, whichever is longer, to file a request for reconsideration of this patent term adjustment calculation. See 35 U.S.C. 154(b)(3)(B)(ii) and 37 CFR 1.322(a)(4). No extensions of time will be granted under 37 CFR 1.136.

Patentee should use document code PET.OP if electronically filing a request for reconsideration of this patent term adjustment calculation. The patentee must also include the information required by 37 CFR 1.705(b)(2) and the fee required by 37 CFR 1.18(e). If patentee does not file a timely request for reconsideration of this patent term adjustment calculation including the information required by 37 CFR 1.705(b)(2) and the fee required by 37 CFR 1.18(e), the USPTO will issue a certificate of correction reflecting the PTA determination noted above.

Patentee should be aware that in order to preserve the right to review in the United States District Court for the District of Columbia of the USPTO patent term adjustment determination, patentee must ensure that he or she also take the steps required under 35 U.S.C. 154(b)(4)(A) in a timely manner. Nothing in the request for recalculation should be construed as providing an alternative time frame for commencing a civil action under 35 U.S.C. 154(b)(4)(A).

Any questions concerning this decision should be directed to the Office of Patent Legal Administration at 571-272-7702.

UNITED STATES PATENT AND TRADEMARK OFFICE

Commissioner for Patents
United States Patent and Trademark Office
P.O. Box 1450
Alexandria, VA 22313-1450
www.uspto.gov

FITCH EVEN TABIN & FLANNERY
120 SOUTH LASALLE STREET
SUITE 1600
CHICAGO IL 60603-3406

COPY MAILED

AUG 0 7 2009

OFFICE OF PETITIONS

In re Patent No. 7,498,050	:	
Carrie Melinda Kincaid, et al.	:	DECISION ON REQUEST FOR
Issue Date: March 3, 2009	:	RECONSIDERATION OF PATENT
Application No. 10/736,037	:	TERM ADJUSTMENT & NOTICE
Filed: December 15, 2003	:	OF INTENT TO ISSUE
Attorney Docket No. 1410-77005	:	CERTIFICATE OF CORRECTION

This is a decision on the "APPLICATION FOR PATENT TERM ADJUSTMENT UNDER C.F.R. §1.705(d)," filed May 1, 2009, requesting that the patent term adjustment determination for the above-identified patent be reviewed and changed from three hundred ninety-nine (399) days to six hundred sixty-two (662) days.

The request for review of the determination of patent term adjustment (PTA) is **granted** to the extent indicated herein.

The patent term adjustment indicated in the patent is to be corrected by issuance of a certificate of correction showing a revised Patent Term Adjustment of **three hundred ninety-three (393)** days.

Patentees are given **THIRTY (30) DAYS or ONE (1) MONTH, whichever is longer,** from the mail date of this decision to respond. No extensions of time will be granted under § 1.136.

On March 3, 2009, the above-identified application matured into U.S. Patent No. 7,498,050 with a patent term adjustment of 399 days. This request for reconsideration of patent term adjustment was timely filed within two months of the issue date of the patent. See 1.705(d).

The Office acknowledges submission of the $200.00 fee set forth in 37 CFR 1.18(e). No additional fees are required.

Patentees request recalculation of the patent term adjustment to include a 269 day period of adjustment pursuant to 37 C.F.R. §1.703(b). Patentees maintain entitlement to a period of adjustment due to the Three Year Delay by the Office, pursuant to 37 CFR § 1.703(b), of 269 days and the period of adjustment due to other examination delay, pursuant to 37 CFR §1.702(a), of 604 days.

The 269 day period is calculated based on the application having been filed under 35 U.S.C. §111(a) on December 15, 2003, and a request for continued examination (RCE) having been filed in this application on September 11, 2007, three years and 269 days later. Patentees assert that in addition to this 269 day period, they are entitled to a period of adjustment due to examination delay, pursuant to 37 CFR §1.702(a), of 604 days for the failure by the Office to mail at least one of a notification under 35 U.S.C. 132 not later than fourteen months after the date on which the application was filed under 35 U.S.C. 111(a), pursuant to § 1.702(a)(1). A first non-final Office action was mailed on October 12, 2006, 14 months and 604 days after the application was filed on December 15, 2003.

Under 37 CFR § 1.703(f), Patentees are entitled to a period of patent term adjustment equal to the period of delays based on the grounds set forth in 37 CFR §1.702 reduced by the period of time equal to the period of time during which Patentees failed to engage in reasonable efforts to conclude prosecution pursuant to 37 CFR §1.704. In other words, the period of Office delay reduced by the period of applicant delay.

Patentees state that pursuant to 37 CFR § 1.704(c)(8), the period of applicant delay should be increased by 6 days, from 205 days to 211 days, for the supplemental reply filed on May 1, 2008. Patentees are correct. A response to a non-final Office action was filed on April 25, 2008. On May 1, 2008, applicants filed a supplemental reply. The period of reduction is 6 days, counting the number of days in the period beginning on April 26, 2008, the date after the initial reply was filed, and ending on May 1, 2008, the date that the supplemental reply was filed.

Patentees do not dispute that the total period of Office delay is the sum of the period of Three Years Delay (269 days) and the period of Examination Delay (604 days) to the extent that these periods of delay are not overlapping. However, in effect,

Patentees contend that no portion of the Three Year Delay period overlaps with the period of 14 month examination delay. Accordingly, Patentees submit that the total period of adjustment for Office delay is 873 days, which is the sum of the period of Three Year Delay (269 days) and the period of Examination Delay (604 days), reduced by the period of overlap (0 days).

As such, Patentees assert entitlement to a patent term adjustment of 662 days (269 + 604 reduced by 0 overlap - 211 (applicant delay)).

The Office agrees that as of the filing of the RCE on September 11, 2007, the application was pending 3 years and 269 days after its filing date. The Office agrees that the action detailed above was not taken within the specified time frame, and thus, the entry of a period of adjustment of 604 days is correct. At issue is whether Patentees should accrue 269 days of patent term adjustment for the Office taking in excess of three years to issue the patent, as well as, 604 days for Office failure to take a certain action within a specified time frame (or examination delay).

The Office contends that 269 days overlap. Patentees' calculation of the period of overlap is inconsistent with the Office's interpretation of this provision. 35 U.S.C. 154(b)(2)(A) limits the adjustment of patent term, as follows:

> to the extent that the periods of delay attributable to grounds specified in paragraph (1) overlap, the period of any adjustment granted under this subsection shall not exceed the actual number of days the issuance of the patent was delayed.

Likewise, 37 CFR 1.703(f) provides that:

> To the extent that periods of delay attributable to the grounds specified in §1.702 overlap, the period of adjustment granted under this section shall not exceed the actual number of days the issuance of the patent was delayed.

As explained in *Explanation of 37 CFR 1.703(f) and of the United States Patent and Trademark Office Interpretation of 35 U.S.C. 154(b)(2)(A)*, 69 Fed. Reg. 34283 (June 21, 2004), the Office

interprets 35 U.S.C. 154(b)(2)(A) as permitting either patent term adjustment under 35 U.S.C. 154(b)(1)(A)(i)-(iv), or patent term adjustment under 35 U.S.C. 154(b)(1)(B), but not as permitting patent term adjustment under both 35 U.S.C. 154(b)(1)(A)(i)-(iv) and 154(b)(1)(B). Accordingly, the Office implements the overlap provision as follows:

> If an application is entitled to an adjustment under 35 U.S.C. 154(b)(1)(B), the entire period during which the application was pending (except for periods excluded under 35 U.S.C. 154(b)(1)(B)(i)-(iii)), and not just the period beginning three years after the actual filing date of the application, is the period of delay under 35 U.S.C. 154(b)(1)(B) in determining whether periods of delay overlap under 35 U.S.C. 154(b)(2)(A). Thus, any days of delay for Office issuance of the patent more than 3 years after the filing date of the application, which overlap with the days of patent term adjustment accorded prior to the issuance of the patent will not result in any additional patent term adjustment. See 35 U.S.C. 154(b)(1)(B), 35 U.S.C. 154(b)(2)(A), and 37 CFR § 1.703(f). See *Changes to Implement Patent Term Adjustment Under Twenty Year Term; Final Rule*, 65 Fed. Reg. 56366 (Sept. 18, 2000). See also *Revision of Patent Term Extension and Patent Term Adjustment Provisions; Final Rule*, 69 Fed. Reg. 21704 (April 22, 2004), 1282 Off. Gaz. Pat. Office 100 (May 18, 2004). See also *Explanation of 37 CFR 1.703(f) and of the United States Patent and Trademark Office Interpretation of 35 U.S.C. 154(b)(2)(A)*, 69 Fed. Reg. 34283 (June 21, 2004).

The current wording of § 1.703(f) was revised in response to the misinterpretation of this provision by a number of Patentees. The rule was slightly revised to more closely track the corresponding language of 35 U.S.C. 154(b)(2)(A). The relevant portion differs only to the extent that the statute refers back to provisions of the statute whereas the rule refers back to sections of the rule. This was not a substantive change to the rule nor did it reflect a change of the Office's interpretation of 35 U.S.C. 154(b)(2)(A). As stated in the *Explanation of 37 CFR 1.703(f) and of the United States Patent and Trademark Office Interpretation of 35 U.S.C. 154(b)(2)(A)*, the Office has consistently taken the position that if an application is entitled to an adjustment under the three-year pendency provision of 35 U.S.C. 154(b)(1)(B), the entire period during

which the application was pending before the Office (except for periods excluded under 35 U.S.C. 154(b)(1)(B)(i)-(iii)), and not just the period beginning three years after the actual filing date of the application, is the relevant period under 35 U.S.C. 154(b)(1)(B) in determining whether periods of delay "overlap" under 35 U.S.C. 154(b)(2)(A).

This interpretation is consistent with the statute. Taken together the statute and rule provide that to the extent that periods of delay attributable to grounds specified in 35 U.S.C. 154(b)(1) and in corresponding §1.702 overlap, the period of adjustment granted shall not exceed the actual number of days the issuance of the patent was delayed. The grounds specified in these sections cover the A) guarantee of prompt Patent and Trademark Office responses, B) guarantee of no more than 3 year application pendency, and C) guarantee or adjustments for delays due to interference, secrecy orders and appeals. A section by section analysis of 35 U.S.C. 154(b)(2)(A) specifically provides that:

> Section 4402 imposes limitations on restoration of term. In general, pursuant to [35 U.S.C.] 154(b)(2)(A)-(C), total adjustments granted for restorations under [35 U.S.C. 154](b)(1) are reduced as follows: (1) To the extent that there are multiple grounds for extending the term of a patent that may exist simultaneously (e.g., delay due to a secrecy order under [35 U.S.C.] 181 and administrative delay under [35 U.S.C.] 154(b)(1)(A)), the term should not be extended for each ground of delay but only for the actual number of days that the issuance of a patent was delayed; See 145 Cong. Rec. S14,718[1]

As such, the period for over 3 year pendency does not overlap only to the extent that the actual dates in the period beginning three years after the date on which the application was filed overlap with the actual dates in the periods for failure of the Office to take action within specified time frames. In other words, consideration of the overlap does not begin three years after the filing date of the application.

---

[1] The AIPA is title IV of the Intellectual Property and Communications Omnibus Reform Act of 1999 (S. 1948), which was incorporated and enacted as law as part of Pub. L. 106-113. The Conference Report for H.R. 3194, 106th Cong. 1st Sess. (1999), which resulted in Pub. L. 106-113, does not contain any discussion (other than the incorporated language) of S. 1948. A section-by-section analysis of S. 1948, however, was printed in the Congressional Record at the request of Senator Lott, See 145 Cong. Rec. S14,708-26 (1999)(daily ed. Nov. 17, 1999).

In this instance, the relevant period under 35 U.S.C. 154(b)(1)(B) in determining whether periods of delay "overlap" under 35 U.S.C. 154(b)(2)(A) is the entire period during which the application was pending before the Office, December 15, 2003, as terminated by the filing of the RCE on September 11, 2007. 604 days of patent term adjustment were accorded prior to the issuance of the patent for the Office failing to respond within a specified time frame during the pendency of the application. All of the 269 days for Office delay in issuing the patent overlap with the 604 days of Office delay. During that time, the issuance of the patent was delayed by 604 days, not 604 + 269 days. The Office took 14 months and 604 days to issue a first Office action. Otherwise, the Office took all actions set forth in 37 C.F.R. § 1.702(a) within the prescribed timeframes. Nonetheless, given the initial 604 days of Office delay and the 211 days of applicant delay and the time allowed within the time frames for processing and examination, as of the filing date of the RCE, the application was pending three years and 269 days. The Office did not delay 604 days and then an additional 269 days. Accordingly, 604 days of patent term adjustment (not 604 and 269 days) was properly entered since the period of delay of 269 days attributable to the delay in the issuance of the patent overlaps with the adjustment of 604 days attributable to grounds specified in § 1.702(a)(1). Entry of both periods is not warranted. 604 days is determined to be the actual number of days that the issuance of the patent was delayed, considering the 269 days over three years to the filing of the RCE.

In view thereof, the patent should have issued with a revised Patent Term Adjustment of **three hundred ninety-three (393)** days (604 days -211 days).

The application file is being forwarded to the Certificates of Correction Branch for issuance of a certificate of correction in order to rectify this error. The Office will issue a certificate of correction indicating that the term of the above-identified patent is extended or adjusted by **three hundred ninety-three (393)** days.

Telephone inquiries specific to this matter should be directed to Shirene Willis Brantley, Senior Petitions Attorney, at (571) 272-3230.

Nancy Johnson
Senior Petitions Attorney
Office of Petitions
Office of Deputy Commissioner
for Patent Examination Policy

Enclosure: copy of DRAFT certificate of correction

UNITED STATES PATENT AND TRADEMARK OFFICE

CERTIFICATE OF CORRECTION

PATENT : 7,498,050 B2

DATED : **March 3, 2009** **DRAFT**

INVENTOR(S) : Kincaid et al.

It is certified that error appears in the above-identified patent and that said Letters Patent is hereby corrected as shown below:

On the cover page,

[*] Notice: Subject to any disclaimer, the term of this patent is extended or adjusted under 35 USC 154(b) by 399 days

Delete the phrase "by 399 days" and insert – by 393 days--

Newsome, Lamonte

From: Qureshi, Afsar
Sent: Thursday, December 10, 2009 1:54 PM
To: Newsome, Lamonte
Subject: SPE's Reponse 3 01-13-2006 for IFW docs (4).doc

Paper No.: _____

DATE : 12/09/09

TO SPE OF : ART UNIT 2472

SUBJECT : Request for Certificate of Correction for Appl. No.: 10736052 Patent No.: 7583694

Please respond to this request for a certificate of correction within 7 days.

FOR IFW FILES:

Please review the requested changes/corrections as shown in the **COCIN** document(s) in the IFW application image. No new matter should be introduced, nor should the scope or meaning of the claims be changed.

Please complete the response (see below) and forward the completed response to scanning using document code **COCX**.

FOR PAPER FILES:

Please review the requested changes/corrections as shown in the attached certificate of correction. Please complete this form (see below) and forward it with the file to:

Certificates of Correction Branch (C of C)
Randolph Square 9D40-D
Palm Location
7580

You can fax the Directors/SPE response to 571-270-9990

Lamonte

Newsome

Certificates of

Correction Branch

703-756-1574

Thank You For Your Assistance

The request for issuing the above-identified correction(s) is hereby:
Note your decision on the appropriate box.

☐ **Approved** **All** changes apply.

☐ **Approved in Part** not apply. Specify below which changes **do**

☐ **Denied** below. State the reasons for denial

Comments: All corrections approved

/AQ/

(Primary Exam. AU 2472

12/9/2009

/William Trost/

2472

SPE

Art Unit

UNITED STATES PATENT AND TRADEMARK OFFICE

UNITED STATES DEPARTMENT OF COMMERCE
United States Patent and Trademark Office
Address: COMMISSIONER FOR PATENTS
P.O. Box 1450
Alexandria, Virginia 22313-1450
www.uspto.gov

SCHWEGMAN, LUNDBERG & WOESSNER, P.A.
P.O. BOX 2938
MINNEAPOLIS, MN 55402

Mail Date: 04/20/2010

Applicant	: Adrian P. Stephens	: DECISION ON REQUEST FOR
Patent Number	: 7583694	: RECALCULATION of PATENT
Issue Date	: 09/01/2009	: TERM ADJUSTMENT IN VIEW
Appliction No	: 10/736,052	: OF WYETH AND NOTICE OF INTENT TO
Filed	: 12/15/2003	: ISSUE CERTIFICATE OF CORRECTION
		:

The Request for Recalculation is **GRANTED** to the extent indicated.

The patent term adjustment has been determined to be **1623** days. The USPTO will *sua sponte* issue a certificate of correction reflecting the amount of PTA days determined by the recalculation.

Prior to the issuance of the certificate of correction, the USPTO will afford patentee an opportunity to be heard and request reconsideration. Accordingly, patentee has **one month or thirty (30) days**, whichever is longer, to file a request for reconsideration of this patent term adjustment calculation. See 35 U.S.C. 154(b)(3)(B)(ii) and 37 CFR 1.322(a)(4). No extensions of time will be granted under 37 CFR 1.136.

Patentee should use document code PET.OP if electronically filing a request for reconsideration of this patent term adjustment calculation. The patentee must also include the information required by 37 CFR 1.705(b)(2) and the fee required by 37 CFR 1.18(e). If patentee does not file a timely request for reconsideration of this patent term adjustment calculation including the information required by 37 CFR 1.705(b)(2) and the fee required by 37 CFR 1.18(e), the USPTO will issue a certificate of correction reflecting the PTA determination noted above.

Patentee should be aware that in order to preserve the right to review in the United States District Court for the District of Columbia of the USPTO patent term adjustment determination, patentee must ensure that he or she also take the steps required under 35 U.S.C. 154(b)(4)(A) in a timely manner. Nothing in the request for recalculation should be construed as providing an alternative time frame for commencing a civil action under 35 U.S.C. 154(b)(4)(A).

Any questions concerning this decision should be directed to the Office of Patent Legal Administration at 571-272-7702.

UNITED STATES PATENT AND TRADEMARK OFFICE

Commissioner for Patents
United States Patent and Trademark Office
P.O. Box 1450
Alexandria, VA 22313-1450
www.uspto.gov

John S. Beulick
Armstrong Teasdale LLP
Suite 2600
One Metropolitan Square
St. Louis MO 63102

COPY MAILED

MAR 2 6 2007

OFFICE OF PETITIONS

In re Application of :
Elliott et al. :
Application No. 10/736,059 : DECISION ON PETITION
Filed: March 9, 2004 :
Attorney Docket No. CET-025985 :

This is a decision on the petition filed December 13, 2005, requesting that the above-identified application be accorded a filing date of December 15, 2003, with two sheets of drawings as part of the original disclosure.

On December 15, 2003, applicants deposited the above-identified application. On March 9, 2004, applicants filed a Transmittal of Formal Drawings, accompanied by two sheets of formal drawings (Figures 1-6). On May 21, 2004, applicants filed a Transmittal of Replacement Drawings, accompanied by one sheet of replacement drawings (Figures 5 and 6), which incorporated corrections to FIG. 6. On September 8, 2004, the Office of Initial Patent Examination mailed a "Notice Of Incomplete Nonprovisional Application," requiring drawings of applicants' invention and stating that the filing date would be the date of receipt of the omitted drawings.[1] Nevertheless, it appears from the record that the Notice of Incomplete was withdrawn and that the Office accorded the above-identified application a filing date of March 9, 2004, the date of applicants' initial response to the Notice.

On December 13, 2005, applicants submitted the present petition, copies of the two sheets of formal drawings (Figures 1-6) and one sheet of replacement drawings (Figures 5 and 6). Additionally, applicants submitted a copy of their date-stamped postcard receipt, acknowledging receipt of "Two (2) Sheets of Informal Drawings" in the USPTO on December 15, 2003. Applicants requested that the Office corrects the filing date for the above-identified application from March 9, 2004 to December 15, 2003.

[1] Applicants stated that the Notice was dated nine (9) months after the initial filing. Applicants indicated that they did not receive the Notice until March 30, 2005, via facsimile transmission from the Office of Initial Patent Examination, and therefore, could not timely respond.

Upon review of the record, the two sheets of drawings deposited on December 15, 2003, have not been located among the application papers. However, the evidence is convincing that the application papers deposited on December 15, 2003, included two sheets of drawings, which were subsequently misplaced in the USPTO. Unfortunately, applicants did not submit copies of the "Two (2) Sheets of Informal Drawings" as they were purportedly filed on December 15, 2003. Instead, applicants submitted copies of the two sheets of formal drawings (Figures 1-6) and one sheet of replacement drawings (Figures 5 and 6).

Accordingly, the petition is dismissed without prejudice. Any renewed petition under 37 CFR 1.182 must be filed within TWO MONTHS of the date of this decision and be accompanied by a copy of the "Two (2) Sheets of Informal Drawings," as they appeared on filing. This period is not extendable. See 37 CFR 1.181(f). No additional fee is necessary for filing the renewed petition. As applicants failed to meet all of the requirements for filing a grantable petition under 37 CFR 1.182, the $400.00 petition fee will be charged to the Deposit Account, which is not refundable.

The application is being referred to Technology Center Art Unit 2832 for examination in the normal course of business.

Further correspondence with respect to this matter may be addressed as follows:

By mail:	Mail Stop Petition Commissioner for Patents P.O. Box 1450 Alexandria, VA 22313-1450
By facsimile:	(571) 273-8300 Attention: Office of Petitions
By hand:	U.S. Patent and Trademark Office Customer Service Window Randolph Building 401 Dulany Street Alexandria, VA 22314

Telephone inquiries related to this decision may be directed to the undersigned at (571) 272-3211.

Christina Tartera Donnell

Christina Tartera Donnell
Senior Petitions Attorney
Office of Petitions

UNITED STATES PATENT AND TRADEMARK OFFICE

Commissioner for Patents
United States Patent and Trademark Office
P.O. Box 1450
Alexandria, VA 22313-1450
www.uspto.gov

John S. Beulick
Armstrong Teasdale LLP
Suite 2600
One Metropolitan Square
St. Louis MO 63102

COPY MAILED

JUN 0 6 2007

OFFICE OF PETITIONS

In re Application of :
Elliott et al. :
Application No. 10/736,059 : DECISION ON PETITION
Filed: March 9, 2004 :
Attorney Docket No. CET-025985 :

This is a decision on the renewed petition filed May 29, 2007, requesting that the above-identified application be accorded a filing date of December 15, 2003, with two sheets of drawings as part of the original disclosure.

On December 15, 2003, applicants deposited the above-identified application. On March 9, 2004, applicants filed a Transmittal of Formal Drawings, accompanied by two sheets of formal drawings (Figures 1-6). On May 21, 2004, applicants filed a Transmittal of Replacement Drawings, accompanied by one sheet of replacement drawings (Figures 5 and 6), which incorporated corrections to FIG. 6. On September 8, 2004, the Office of Initial Patent Examination mailed a "Notice Of Incomplete Nonprovisional Application," requiring drawings of applicants' invention and stating that the filing date would be the date of receipt of the omitted drawings.[1] Nevertheless, it appears from the record that the Notice of Incomplete was withdrawn and that the Office accorded the above-identified application a filing date of March 9, 2004, the date of applicants' initial response to the Notice.

On December 13, 2005, applicants submitted the original petition, copies of the two sheets of formal drawings (Figures 1-6) and one sheet of replacement drawings (Figures 5 and 6). Additionally, applicants submitted a copy of their date-stamped postcard receipt, acknowledging receipt of "Two (2) Sheets of Informal Drawings" in the USPTO on December 15, 2003. Applicants requested that the Office correct the filing date for the above-identified application from March 9, 2004 to December 15, 2003. The petition was dismissed by the decision of March 26, 2007, because applicants did not provide the Office with a copy of the drawings as they were filed on December 15, 2003.

[1] Applicants stated that the Notice was dated nine (9) months after the initial filing. Applicants indicated that they did not receive the Notice until March 30, 2005, via facsimile transmission from the Office of Initial Patent Examination, and therefore, could not timely respond.

On May 29, 2007, applicants submitted the present renewed petition and copies of the two drawing sheets purportedly filed on December 15, 2003.

Upon review of the record, the two sheets of drawings deposited on December 15, 2003, have not been located among the application papers. However, the evidence is convincing that the application papers deposited on December 15, 2003, included two sheets of drawings, which were subsequently misplaced in the USPTO. Therefore, the application, including the two sheets of drawings, was complete on filing and will be granted a filing date of December 15, 2003.

Accordingly, the petition is granted.

This matter is being referred to the Office of Initial Patent Examination **to accord the application a filing date of December 15, 2003,** using the two drawing sheet submitted on May 29, 2007. The Office is further directed to mail applicants a corrected filing receipt, correcting the filing date to December 15, 2003, and indicating in the record that two drawing sheets were present on filing.

Any inquiries related to this decision should be directed to the undersigned at (571) 272-3211.

Christina Tartera Donnell

Christina Tartera Donnell
Senior Petitions Attorney
Office of Petitions

UNITED STATES PATENT AND TRADEMARK OFFICE

Commissioner for Patents
United States Patent and Trademark Office
P.O. Box 1450
Alexandria, VA 22313-1450
www.uspto.gov

MYERS BIGEL SIBLEY & SAJOVEC, P.A
PO BOX 37428
RALEIGH NC 27627

COPY MAILED

OCT 14 2008

OFFICE OF PETITIONS

In re Application of:
HILL, Lee, et al.
Application No.: 10/736,079
Filed: December 15, 2003
Attorney Docket No.: 9314-57

DECISION APPROVING
WITHDRAWAL OF ATTORNEY

This is a decision on the Request to Withdraw as Attorney/Agent of Record under 37 CFR § 1.36, filed October 2, 2008.

The Request is **APPROVED**.

Debra K. Stephens requests that she alone be withdrawn as an attorney under 37 CFR § 1.36, pursuant to the reason set forth under 37 CFR § 10.40(b)(2), because of her current employment by the United States Patent and Trademark Office. Since the Request satisfies all of the requirements for withdrawal, it is appropriate to approve the Request and withdraw only Ms. Stephens as an attorney of record.

All future communications from the Office will continue to be directed to the above-identified correspondence address.

A courtesy copy of this decision is being mailed to Ms. Stephens at the address identified in the Request.

Telephone inquiries relating to this decision should be directed Brian W. Brown at (571) 272-5338.

Brian W. Brown
Petitions Examiner
Office of Petitions

Cc: Debra K. Stephens
301 Edgemore Avenue
Cary, NC 27519

UNITED STATES PATENT AND TRADEMARK OFFICE

Commissioner for Patents
United States Patent and Trademark Office
P.O. Box 1450
Alexandria, VA 22313-1450
www.uspto.gov

GENERAL ELECTRIC COMPANY
GE GLOBAL PATENT OPERATION
2 CORPORATE DRIVE, SUITE 648
SHELTON CT 06484

MAILED

JUL 09 2010

OFFICE OF PETITIONS

In re Application of	:	
Kumar et al.	:	
Application No. 10/736,089	:	ON PETITION
Filed: December 15, 2003	:	
Attorney Docket No. 132250	:	

This is a decision on the petition under 37 CFR 1.181, filed February 4, 2010, requesting the withdrawal of the holding of abandonment in the above-identified application and has been so treated.

The petition to withdraw the holding of abandonment is **GRANTED.**

The above-identified application was held abandoned for failure to timely reply to the non-final Office action mailed May 29, 2010, which set a shortened statutory period for reply of three (3) months. A reply was due on or before August 29, 2010. A Notice of Abandonment was mailed on December 29, 2009.

Petitioner states that the reply was in fact timely filed. To support this assertion, petitioner has submitted a copy of the Electronic Acknowledgement Receipt, which acknowledges receipt by the U.S. Patent and Trademark Office (USTPO) on August 27, 2009 of 1. Applicant Arguments/Remarks Made in an Amendment; 2. Power of Attorney; and 3. Assignee showing of ownership per 37 CFR 3.73(b). Additionally, petitioner has supplied a copy of the previously mailed correspondence.

The reply acknowledged as having been received in the USPTO on August 27, 2009 has been located in the application file. Accordingly, at the response was submitted timely, the holding of abandonment is hereby withdrawn and the application restored to pending status.

A petition to withdraw the holding of abandonment under the provisions of 37 CFR 1.181 does not require a fee and none has been charged.

This matter is being referred to Technology Center AU 3664 for further examination on the merits.

Telephone inquiries concerning this decision should be directed to the undersigned at (571) 272-3206.

Liana Walsh
Petitions Examiner
Office of Petitions

UNITED STATES PATENT AND TRADEMARK OFFICE

Commissioner for Patents
United States Patent and Trademark Office
P.O. Box 1450
Alexandria, VA 22313-1450
www.uspto.gov

BUSKOP LAW GROUP, P.C.
1776 YORKTOWN
SUITE 550
HOUSTON TX 77056

COPY MAILED
JUL 14 2006
OFFICE OF PETITIONS

In re Application of	:	
Sacks et al.	:	
Application No. 10/736,107	:	ON PETITION
Filed: December 15, 2003	:	
Attorney Docket No. 1219.05	:	

This is a decision on the petition under 37 CFR 1.102(c)(1), filed June 20, 2006, to make the above-identified application special based on applicant's age as set forth in M.P.E.P. § 708.02, Section IV.

The petition is **GRANTED**.

A grantable petition to make an application special under 37 CFR 1.102(c)(1) and MPEP § 708.02, Section IV: Applicant's Age must be accompanied by evidence showing that at least one of the applicants is 65 years of age, or more, such as a birth certificate or a statement by applicant. No fee is required.

The instant petition includes a copy of the applicant's driver's license. Accordingly, the above-identified application has been accorded "special" status.

Telephone inquiries concerning this decision should be directed to Petitions Examiner Liana Chase at 571-272-3206. All other inquiries concerning either the examination or status of the application should be directed to the Technology Center.

This matter is being referred to the Technology Center Art Unit 2626 for action on the merits commensurate with this decision.

Liana Chase
Petitions Examiner
Office of Petitions

UNITED STATES PATENT AND TRADEMARK OFFICE

Commissioner for Patents
United States Patent and Trademark Office
P.O. Box 1450
Alexandria, VA 22313-1450
www.uspto.gov

JOHNS MANVILLE
Legal Department
10100 West Ute Avenue
Littleton CO 80127

COPY MAILED

MAR 20 2006

OFFICE OF PETITIONS

In re Application of :
Brandel et al. :
Application No. 10/736,119 : ON PETITION
Filed: December 15, 2003 :
Attorney Docket Number: 7343-2

This is a decision on the petition under 37 CFR 1.137(b), filed March 6, 2006, to revive the above-identified application.

This above-identified application became abandoned for failure to timely file a reply to the non-final Office Action of July 12, 2005. The non-final Office Action set a three (3) month shortened statutory period for reply. No extensions of time were obtained under the provisions of 37 CFR §1.136(a). Accordingly, this application became abandoned on January 12, 2005. A Notice of Abandonment was mailed on February 24, 2006.

This petition is hereby **Granted**.

An untimely petition for four (4) month extension of time was filed on January 12, 2005. However, pursuant to 37 CFR 1.136, an extension of time must be filed prior to the expiration of the maximum extendable period for reply. See In re Application of S., 8 USPQ2d 1630, 1631 (Comm'r Pats. 1988) Petitioner's six (6) month statutory period expired on October 12, 2005. Petitioner is ineligible for any extensions of time. Petitioner is entitled to a refund of the previously submitted petition fee of $1590.00. Petitioner may request a refund by writing to the Finance Office, Refund Section. A copy of this decision to should accompany any request for refund.

The office hereby acknowledges the receipt of the amendment submitted on February 10, 2006.

This application is being forwarded to Technology Center 1700 for further processing.

Telephone inquiries concerning this matter should be directed to the undersigned at (571) 272-3215.

Charlema R. Grant

Charlema R. Grant
Petitions Attorney
Office of Petitions

SPE RESPONSE FOR CERTIFICATE OF CORRECTION

Paper No.: _____

DATE : February 10, 2007

TO SPE OF : ART UNIT 3616 10/736130

SUBJECT : Request for Certificate of Correction on Patent No.: 7124851 B2

A response is requested with respect to the accompanying request for a certificate of correction.

Please complete this form and return with file, within 7 days to:
Palm location **7580, Certificates of Correction Branch – South Tower – 9A22**
If response is for an IFW, **return to employee (named below) via PUBSCofC Team in MADRAS.**
With respect to the change(s) requested, correcting Office and/or Applicant's errors, should the patent read as shown in the certificate of correction (COCIN)? No new matter should be introduced, nor should the scope or meaning of the claims be changed.

Elisha Evans
Certificates of Correction Branch
Tel. No. 703-308-9390 EXT 110

Thank You For Your Assistance

The request for issuing the above-identified correction(s) is hereby:
Note your decision on the appropriate box.

- ☐ **Approved** — All changes apply.
- ☐ **Approved in Part** — Specify below which changes **do not** apply.
- ☒ **Denied** — State the reasons for denial below.

Comments:

Applicant has not provided any reason for clm 14 being deleted. Examiner points out that originally filed clm 14 has been cancelled and claim 14 in Pat.No. 7,124,851 is clm 19 (as orig. filed) ~~and~~ to further clarify the issue.

PAUL N. DICKSON 5/9/07
SUPERVISORY PATENT EXAMINER
TECHNOLOGY CENTER 3600

3616
Art Unit

SPE RESPONSE FOR CERTIFICATE OF CORRECTION

Paper No.: _____

DATE : February 10, 2007

TO SPE OF : ART UNIT 3616 10/736130

SUBJECT : Request for Certificate of Correction on Patent No.: 7124851 B2

A response is requested with respect to the accompanying request for a certificate of correction.

Please complete this form and return with file, within 7 days to:
Palm location **7580, Certificates of Correction Branch – South Tower – 9A22**
If response is for an IFW, **return to employee (named below) via PUBSCofC Team in MADRAS.**
With respect to the change(s) requested, correcting Office and/or Applicant's errors, should the patent read as shown in the certificate of correction (COCIN)? No new matter should be introduced, nor should the scope or meaning of the claims be changed.

Elisha Evans
Certificates of Correction Branch
Tel. No. 703-308-9390 EXT 110

Thank You For Your Assistance

The request for issuing the above-identified correction(s) is hereby:
Note your decision on the appropriate box.

☐ **Approved**	All changes apply.
☐ **Approved in Part**	Specify below which changes **do not** apply.
☒ **Denied**	State the reasons for denial below.

Comments:

Applicant has not provided any reason for clm 14 being deleted. Examiner points out that originally filed clm 14 has been cancelled and claim 14 in Pat. No. 7,124,851 is clm 19 (as orig. filed) ~~and~~ to further clarify the issue.

PAUL N. DICKSON 5/9/07
SUPERVISORY PATENT EXAMINER
TECHNOLOGY CENTER 3600

3616
Art Unit

UNITED STATES PATENT AND TRADEMARK OFFICE

Commissioner for Patents
United States Patent and Trademark Office
P.O. Box 1450
Alexandria, VA 22313-1450
www.uspto.gov

May 24, 2007

Patent No. : 7124851 B2
Ser. No. : 10/736130
Inventor(s) : Smith, et al.
Issued : Oct. 24, 2006
Title : **SEAT MOUNTING STRUCTURE FOR MITIGATING INJURY IN SIDE IMPACTS**
Docket No. : 14280

Re: Request for Certificate of Correction

Consideration has been given your request for the issuance of a certificate of correction for the above-identified patent.

Applicant has not provided any reason for claim 14 being deleted. Examiner points out that originally filed claim 14 has been cancelled and claim 14 in Patent No. 7,124,851 is claim 19 (as orig. filed) to further clarify the issue.

In view of the foregoing, your request is hereby denied.

Elisha Evans
For Cecelia Newman, Supervisor
Decisions & Certificates
of Correction Branch
(703) 308-9390 ext. 110

Craig J. Madson
MADSON & AUSTIN
15 West South Temple, Suite 900
Salt Lake City, UT 84101

CBN/eme

UNITED STATES PATENT AND TRADEMARK OFFICE

Commissioner for Patents
United States Patent and Trademark Office
P.O. Box 1450
Alexandria, VA 22313-1450
www.uspto.gov

BENJAMIN AARON ADLER
ADLER & ASSOCIATES
8011 CANDLE LANE
HOUSTON TX 77071

COPY MAILED

JAN 26 2009

OFFICE OF PETITIONS

In re Application of :
Flock, et al. :
Application No. 10/736,133 : ON PETITION
Filed: December 15, 2003 :
Attorney Docket No. D6462CIP :

This is a decision on the petition to revive under 37 CFR 1.137(a), filed January 5, 2009.

The petition under 37 CFR 1.137(a) is **DISMISSED**.

Any request for reconsideration of this decision must be submitted within **TWO (2) MONTHS** from the mail date of this decision. The reconsideration request should include a cover letter entitled "Renewed Petition under 37 CFR 1.137(a)". Extensions of time under 37 CFR 1.136(a) are permitted. No fee is required for a renewed petition.

The above-identified application became abandoned for failure to timely file a reply in response to the non-final Office action mailed March 14, 2008. This Office action set a shortened statutory period for reply of three (3) months. No reply having been received, the application became abandoned on June 15, 2008. A Notice of Abandonment was mailed on November 19, 2008.

A grantable petition under 37 CFR 1.137(a) must be accompanied by: (1) the reply required to the outstanding Office action or notice, unless previously filed; (2) the petition fee set forth in 37 CFR 1.17(l); (3) a showing to the satisfaction of the

Commissioner that the **entire delay** in filing the required reply from the due date for the reply until the filing of a grantable petition pursuant to this paragraph was unavoidable; and (4) Any terminal disclaimer (and fee as set forth in § 1.20(d)) required pursuant to paragraph (d) of this section. The instant petition lacks item (3).

Decisions on reviving abandoned applications on the basis of "unavoidable" delay have adopted the reasonably prudent person standard in determining if the delay was unavoidable: "The word 'unavoidable' ... is applicable to ordinary human affairs, and requires no more or greater care or diligence than is generally used and observed by prudent and careful men in relation to their most important business."[1]

Moreover, delay resulting from the lack of knowledge or improper application of the patent statutes, rules of practice or the Manual of Patent Examining Procedure, however, does not constitute "unavoidable" delay.[2]

Applicants assert unavoidable delay due to Hurricane Ike. According to petitioner, the office of counsel for Applicants underwent mandatory emergency evacuation on September 10, 2008. Petitioner states that they had already drafted a complete response to the Office action by that date, and were awaiting confirmation instruction from Applicants in order to submit the response before September 15, 2008. However, because most of Houston did not have electrical power or postal service until September 22, 2008, Applicants could not submit a response until that time.

As set forth above, 37 CFR 1.137(a) requires a showing that the **entire period** in filing the required reply from the due date for the reply until the filing of a grantable petition was unavoidable. Applicants have not provided such a showing here. Assuming *arguendo* that applicants were unavoidably prevented from filing a reply until September 22, 2008, there has been no showing to support the conclusion that the period from

---

[1] In re Mattulath, 38 App. D.C. 497, 514-15 (1912)(*quoting* Ex parte Pratt, 1887 Dec. Comm'r Pat. 31, 32-33 (1887)); see also Winkler v. Ladd, 221 F. Supp. 550, 552, 138 U.S.P.Q. 666, 167-68 (D.D.C. 1963), aff'd, 143 U.S.P.Q. 172 (D.C. Cir. 1963); Ex parte Henrich, 1913 Dec. Comm'r Pat. 139, 141 (1913).

[2] See Haines, 673 F. Supp. at 317, 5 U.S.P.Q. 2d at 1132; Vincent v. Mossinghoff, 230 U.S.P.Q. 621, 624 (D.D.C. 1985); Smith v. Diamond, 209 U.S.P.Q. 1091 (D.D.C. 1981); Potter v. Dann, 201 U.S.P.Q. 574 (D.D.C. 1978); Ex parte Murray, 1891 Dec. Comm'r Pat. 130, 131 (1891).

September 23, 2008 to January 5, 2009 was unavoidable.

Alternative Venue and Other Matters:

While the showing of record is not sufficient to establish to the satisfaction of the Commissioner that the delay was unavoidable, petitioner is not precluded from obtaining relief by filing a petition pursuant to **37 CFR 1.137(b)** on the basis of **unintentional** delay. A grantable petition pursuant to 37 CFR 1.137(b) must be accompanied by (1) The reply required to the outstanding Office action or notice, unless previously filed; (2) The petition fee as set forth in 37 CFR 1.17(m); (3) A statement that the entire delay in filing the required reply from the due date for the reply until the filing of a grantable petition pursuant to this paragraph was unintentional; and (4) Any terminal disclaimer (and fee as set forth in § 1.20(d)) required pursuant to paragraph (d) of this section.

Further correspondence with respect to this matter should be addressed as follows:

By mail: Mail Stop Petitions
Commissioner for Patents
P.O. Box 1450
Alexandria VA 22313-1450

By FAX: (571)273-8300
Attn: Office of Petitions

Telephone inquiries related to this decision should be directed to the undersigned at (571)272-3207.

Cliff Congo
Petitions Attorney
Office of Petitions

UNITED STATES PATENT AND TRADEMARK OFFICE

Commissioner for Patents
United States Patent and Trademark Office
P.O. Box 1450
Alexandria, VA 22313-1450
www.uspto.gov

RICHARD M. GOLDMAN
371 ELAN VILLAGE LANE
SUITE 208
SAN JOSE CA 95134

COPY MAILED

APR 16 2008

In re Application of	:	
Dorothea Wiesmann et al	:	
Application No. 10/736,141	:	DECISION GRANTING PETITION
Filed: December 15, 2003	:	UNDER 37 CFR 1.137(b)
Attorney Docket No. CH920020055US1	:	

This is a decision on the petition under 37 CFR 1.137(b), filed August 21, 2007, to revive the above-identified application.

The petition is **GRANTED**.

The petition satisfies the conditions for revival pursuant to the provisions of 37 CFR 1.137(b) in that (1) the reply in the form of the issue and publication fees; (2) the petition fee; and (3) the required statement of unintentional delay have been received. Accordingly, the reply to the Notice of Allowance of January 26, 2006, is accepted as having been unintentionally delayed.

There is no indication that the person signing the instant petition was ever given a power of attorney or authorization of agent to prosecute the above-identified application. If the person signing the instant petition desires to receive future correspondence regarding this application, the appropriate power of attorney or authorization of agent must be submitted. While a courtesy copy of this decision is being mailed to the person signing the instant petition, all future correspondence will be directed to the address currently of record until such time as appropriate instructions are received to the contrary.

Telephone inquiries concerning this decision should be directed to the undersigned at (571) 272-3208.

This application is being referred to the Office of Data Management to be processed into a patent.

Karen Creasy
Petitions Examiner
Office of Petitions

cc:

DANIEL E. JOHNSON
650 HARRY ROAD
SAN JOSE, CA 95120

UNITED STATES PATENT AND TRADEMARK OFFICE

Commissioner for Patents
United States Patent and Trademark Office
P.O. Box 1450
Alexandria, VA 22313-1450
www.uspto.gov

COPY MAILED

OCT 16 2006

OFFICE OF PETITIONS

Orum & Roth LLC
53 W Jackson Boulevard
Chicago IL 60604-3606

In re Application of :
NAGAI :
Application No. 10/736,150 : DECISION ON PETITION
Filed: December 15, 2003 : TO WITHDRAW
Attorney Docket No. 13712 : FROM RECORD
:

This is a decision on the Request to Withdraw as attorney or agent of record under 37 C.F.R. § 1.36(b), filed July 16, 2006.

The request is **APPROVED**.

A grantable request to withdraw as attorney/agent of record must be signed by every attorney/agent seeking to withdraw or contain a clear indication that one attorney is signing on behalf of another/others. A request to withdraw will not be approved unless at least 30 (thirty) days would remain between the date of approval and the later of the expiration date of a time to file a response or the expiration date of the maximum time period which can be extended under 37 C.F.R. § 1.136(a).

The request was signed by Catherine L. Gemrich.

Catherine L. Gemrich has been withdrawn as attorney or agent of record; all other attorneys remain of record.

The correspondence address of record remains unchanged.

A Review of the file discloses that a non-final Office action was mailed on October 02, 2006, which set forth a three month shortened statutory period for reply. Extensions of time under 37 CFR 1.136(a) are available.

Telephone inquiries concerning this decision should be directed to Patricia Volpe at 571-272-6825.

David Bucci
Petitions Examiner
Office of Petitions

UNITED STATES PATENT AND TRADEMARK OFFICE

Commissioner for Patents
United States Patent and Trademark Office
P.O. Box 1450
Alexandria, VA 22313-1450
www.uspto.gov

MAILED

AUG - 8 2006

TECHNOLOGY CENTER 2100

Paper No.

Wendy Buskop
BUSKOP LAW GROUP, P.C.
1776 Yorktown St. Suite 550
Houston, TX 77056

In re Application of:
Jerry Dennis Sacks
Application No. 10/736,162
Filed: December 16, 2003
For: OBJECT LOADING SYSTEM AND METHOD

DECISION ON PETITION TO MAKE SPECIAL UNDER 37 C.F.R. ∋1.102(c) AND MPEP ∋708.02 (IV): APPLICANT'S AGE

This is a decision on the petition, filed June 20, 2006, under 37 C.F.R. ∋1.102(c) and M.P.E.P. ∋708.02(IV): Applicant's Age, to make the above-identified application special.

A grantable petition to make special under 37 C.F.R. ∋1.102 and in accordance with M.P.E.P. ∋708.02, Section IV must include a showing, as by a birth certificate or the applicant's statement, that the applicant is sixty five (65) years of age or more. No fee is required for this petition.

The petition includes a copy of Jerry Dennis Sacks birth certificate establishing that applicant is sixty five (65) years of age or more. Accordingly, the petition is **GRANTED.**

The application is being forwarded to the examiner for expedited prosecution.

James R. Matthews

/JM/ Pinchus M. Laufer
Special Programs Examiner
Technology Center 2100
Computer Architecture, Software, and Information Security
(571) 272-3599

UNITED STATES PATENT AND TRADEMARK OFFICE

COMMISSIONER OF PATENTS

February 10, 2005

Stanley N. Protigal
Volpe and Koening
United Plaza, Suite 1600
30 South 17th St.
Philadelphia, PA 19103

In re Application of:
Martin J. Dowling
Serial No.: 10/736,165 On Petition
Filing Date: December 15, 2003
For: REMOTE ALERTING UNIT FOR SIGNALING USERS

In response to the petition received by fax on January 11, 2005, to withdraw the holding of abandonment in the above application.

The petition is Granted.

The above-identified application became abandoned for failure to reply with the meaning of 37 C.D.R 1.113 in a timely manner to the Notice to File Missing Parts of Non Provisional Application mailed March 25, 2004. Which set forth a shortened statutory period for reply of two months. Accordingly, the above-identified application became abandoned May 26, 2004.

The application was abandoned in error. The office regrets any inconvenience this may have caused the client.

The application has been completed with the documents received on January 11, 2005 for release to Technology Center 2661.

Telephone inquiries concerning this application may be directed to Doshie E. Day (703) 308-3640.

Doshie E. Day
Program Management Assistant
Office of Initial Patent Examination

UNITED STATES PATENT AND TRADEMARK OFFICE

Commissioner for Patents
United States Patent and Trademark Office
P.O. Box 1450
Alexandria, VA 22313-1450
www.uspto.gov

MAXIMILIAN R. PETERSON
O'KEEFE EGAN & PETERMAN
BUILDING C, SUITE 200
1101 CAPITAL OF TEXAS HIGHWAY SOUTH
AUSTIN, TX 78746

COPY MAILED

NOV 0 4 2005

OFFICE OF PETITIONS

In re Application of :
Mukunda Krishnappa et al :
Application No. 10/736,167 : DECISION DISMISSING
Filed: December 15, 2003 : PETITION
Attorney Docket No. ALTR:024 : UNDER 37 CFR 1.137(b)

This is a decision on the petition under 37 CFR 1.137(b), filed October 14, 2005 to revive the instant nonprovisional application for failure to timely notify the U.S. Patent and Trademark (USPTO) of the filing of an application in a foreign country, or under a multinational treaty that requires publication of applications eighteen months after filing. *See* 37 CFR 1.137(f).

The petition is **DISMISSED**.

Any request for reconsideration of this decision must be filed within TWO MONTHS from the mail date of this decision. Extensions of time are available pursuant to the provisions of 37 CFR 1.136(a).

A petition under 37 CFR 1.137(f) must be accompanied by:

(1) the reply which is met by the notification of such filing in a foreign country or under a multinational treaty;

(2) the petition fee as set forth in 37 CFR 1.17(m); and

(3) a statement that the entire delay in filing the required reply from the due date of the reply until the filing of a grantable petition was unintentional.

The petition fails to comply with item (1) above. More specifically, while notification has been given of the foreign filing, the petition fails to state the date of such foreign filing. Accordingly, the date of foreign filing must be supplied in order to grant the revival of the instant application.

Further correspondence with respect to this matter should be addressed as follows:

By mail: Mail Stop PETITION
Commissioner for Patents
Post Office Box 1450
Alexandria, VA 22313-1450

By hand: Customer Service Window
Randolph Building
401 Dulany Street
Alexandria, VA 22314

By Fax: (571) 273-8300
ATTN: Office of Petitions

Any questions concerning this matter may be directed to the undersigned at (571) 272-3220.

Wan Laymon
Petitions Examiner
Office of Petitions

UNITED STATES PATENT AND TRADEMARK OFFICE

Commissioner for Patents
United States Patent and Trademark Office
P.O. Box 1450
Alexandria, VA 22313-1450
www.uspto.gov

MAXIMILIAN R. PETERSON
O'KEEFE EGAN & PETERMAN
BUILDING C, SUITE 200
1101 CAPITAL OF TEXAS HIGHWAY SOUTH
AUSTIN, TX 78746

COPY MAILED

JAN 18 2006

OFFICE OF PETITIONS

In re Application of :
Mukunda Krishnappa et al :
Application No. 10/736,167 : DECISION GRANTING PETITION
Filed: December 15, 2003 : UNDER 37 CFR 1.137(b)
Attorney Docket No. ALTR:024 :

This is a decision on the renewed petition under 37 CFR 1.137(b), filed December 2, 2005, to revive the instant nonprovisional application for failure to timely notify the U.S. Patent and Trademark (USPTO) of the filing of an application in a foreign country, or under a multinational treaty that requires publication of applications eighteen months after filing. *See* 37 CFR 1.137(f).

The petition is **GRANTED**.

Petitioner states that the instant nonprovisional application is the subject of an application filed in an eighteen month publication country on December 15, 2004. However, the USPTO was unintentionally not notified of this filing within 45 days subsequent to the filing of the subject application in an eighteen month publication country.

In view of the above, this application became abandoned pursuant to 35 U.S.C. § 122(b)(2)(B)(iii) and 37 CFR 1.213(c) for failure to timely notify the Office of the filing of an application in a foreign country or under a multilateral international agreement that requires publication of applications 18 months after filing.

A petition to revive an application abandoned pursuant to 35 U.S.C. 122(b)(2)(B)(iii) for failure to notify the USPTO of a foreign filing must be accompanied by:

(1) the required reply which is met by the notification of such filing in a foreign country or under a multinational treaty;
(2) the petition fee as set forth in 37 CFR 1.17(m);

and
(3) a statement that the entire delay in filing the required reply from the due date of the reply until the filing of a grantable petition was unintentional.

The instant petition has been found to be in compliance with 37 CFR 1.137(b). Accordingly, the failure to timely notify the USPTO of a foreign or international filing within 45 days after the date of filing of such foreign or international application as provided by 35 U.S.C. § 122(b)(2)(B)(iii) and 37 CFR 1.213(c) is accepted as having been unintentionally delayed.

The previous Request and Certification under 35 U.S.C. § 122(b)(2)(B)(i) has been previously rescinded.

Any inquiries concerning this decision may be directed to the undersigned at (571) 272-3220.

This matter is being forwarded to Technology Center Art Unit 2819.

Wan Laymon
Petitions Examiner
Office of Petitions

UNITED STATES PATENT AND TRADEMARK OFFICE

Commissioner for Patents
United States Patent and Trademark Office
P.O. Box 1450
Alexandria, VA 22313-1450
www.uspto.gov
DIW 10-04

LEXMARK INTERNATIONAL, INC.
INTELLECTUAL PROPERTY LAW DEPARTMENT
740 WEST NEW CIRCLE ROAD
BLDG. 082-1
LEXINGTON KY 40550-0999

COPY MAILED
OCT 05 2004
OFFICE OF PETITIONS

In re Application of :
Barkley et al. :
Application No. 10/736,183 : ON PETITION
Filed: 15 December, 2003 :
Attorney's Docket No. 2003-0504.02 :

This is a decision on the petition filed on 18 August, 2004, requesting that the above-identified application be accorded a filing date of 15 December, 2003, with Figures 1 and 2 described in the specification as a part of the original disclosure.

The petition is granted.

On 15 December, 2003, the application was filed.

Accordingly, on 21 June, 2004, Initial Patent Examination Division mailed a Notice of Omitted Item(s) in a Nonprovisional Application, stating that the application had been accorded a filing date of 15 December, 2003, but that Figures 1 and 2 described in the specification appeared to have been omitted.

In response, on 18 August, 2004, the present petition and a copy of two (2) sheets of drawings containing Figures 1 and 2 described in the specification, was filed. Petitioners argue that the sheets of drawings containing Figures 1 and 2 were filed with the other application papers on 15 December, 2003, but were subsequently misplaced in the U.S. Patent and Trademark Office (Office). In support, a copy of petitioners' postcard receipt was supplied with the present petition. The postcard receipt

shows an Office date stamp of 12/15/03, the above-identified application number, and identifies the application by the first named inventor's last name, invention title and attorney docket number, and acknowledges receipt of, *inter alia*, 11 drawing sheets. Petitioners request that the application, including two (2) sheets of drawings containing Figures 1 and 2 described in the specification, be accorded a filing date of 15 December, 2003.

A review of the record reveals that nine (9) sheets of drawings are located in the official file. No sheet of drawings containing Figures 1 and 2 described in the specification has been located among the application papers received on 15 December, 2003. However, the evidence is convincing that the application papers deposited on 15 December, 2003, included 11 sheets of drawings, two (2) sheets of which included Figures 1 and 2 described in the specification, respectively, which were subsequently misplaced in the Office. Therefore, the application, including two (2) sheets drawings containing Figures 1 and 2 described in the specification, is entitled to a filing date of 15 December, 2003.

The "Notice" mailed on 21 June, 2004, is vacated.

In view of the above, the petition is granted. The petition fee of $130.00 is unnecessary and will be refunded to counsel's deposit account, No. 20-0095.

There is no indication that petition herein was ever empowered to prosecute the instant application. If petitioner desires to receive future correspondence regarding this application, the appropriate power of attorney documentation must be mailed.

The address listed on the petition is different than the correspondence address of record. A courtesy copy of this decision is being mailed to the address noted on the petition. However, until otherwise instructed, all future correspondence regarding this application will be mailed solely to the address of record.

The application will be processed with the copy of two (2) sheets of drawings containing Figures 1 & 2 supplied on 18 August, 2004, as a part of the original disclosure.

The application is being returned to Initial Patent Examination Division for further processing with a filing date of 15 December, 2003, using the application papers filed on that date,

and the sheet of drawings containing Figures 1 and 2 supplied with the present petition.

Telephone inquires should be directed to the undersigned at 571-272-3231.

Douglas I. Wood
Senior Petitions Attorney
Office of Petitions

cc: RONALD K. AUST
TAYLOR & AUST, P.C.
12029 E. WASHINGTON STREET
INDIANAPOLIS, IN 46229

UNITED STATES PATENT AND TRADEMARK OFFICE

Commissioner for Patents
United States Patent and Trademark Office
P.O. Box 1450
Alexandria, VA 22313-1450
www.uspto.gov

Davidson, Davidson & Kappel, LLC
485 7th Avenue
14th Floor
New York NY 10018

COPY MAILED

JUN 12 2009

OFFICE OF PETITIONS

In re Application of	:	
Glen Roger Caron, et al.	:	
Application No. 10/736,187	:	ON PETITION
Filed: December 15, 2003	:	
Attorney Docket No. 6001.1298	:	

This is a decision on the petition under 37 CFR 1.137(b), filed April 28, 2009, to revive the above-identified application.

The petition is **GRANTED**.

The application became abandoned as a result of petitioner's failure to file an appeal brief (and fee required by 37 CFR 41.20(b)(2)) within the time period provided in 37 CFR 41.37(a)(1). As an appeal brief (and appeal brief fee) was not filed within two (2) months of the Notice of Appeal filed June 4, 2007, and no extensions of time under the provisions of 37 CFR 1.136(a) were obtained, the appeal was dismissed and the proceedings as to the rejected claims were terminated. See 37 CFR 41.37(b). As no claim was allowed, the application became abandoned on August 5, 2007. See MPEP 1215.04.

The petition satisfies the requirements of 37 CFR 1.137(b) in that petitioner has supplied (1) the reply in the form of an Appeal Brief and fee; (2) the petition fee of $1,620; and (3) an adequate statement of unintentional delay.

Telephone inquiries concerning this decision should be directed to Terri Williams at (571) 272-2991.

The application file is being referred to Technology Center AU 3653 for appropriate action on the concurrently filed appeal brief.

Chris Bottorff
Petitions Examiner
Office of Petitions

TOLER
LARSON
& ABEL LLP

RECEIVED
CENTRAL FAX CENTER
AUG 0 5 2005

FACSIMILE COVER SHEET

DATE: August 5, 2005

TO: Examiner UNASSIGNED **FAX NO.:** 571-273-8300
USPTO GPAU: 1762

FROM: Jeffrey S. Abel
Registration No.: 36,079

RE U.S. App. No.: 10/736,210, filed December 15, 2003

Applicant(s): Venkat Selvamanickam

Atty Dkt No.: 1014-SP211-US

Title: CHEMICAL VAPOR DEPOSITION PROCESS USING NOVEL PRECURSORS

NO. OF PAGES (including Cover Sheet): 3

MESSAGE:

Attached please find:

☒ Transmittal Form (1 pg)
☒ Petition to Make Special Under 37 C.F.R. 1.102 (1 pg)

BEST AVAILABLE COPY

PETITION GRANTED

Richard Crispino
Special Program Examiner
TC 1700

AUG 15 2005

5000 Plaza On The Lake
Suite 265
AUSTIN, TEXAS 78746

Tel: (512) 327-5515
Fax: (512) 327-5452

CONFIDENTIALITY NOTE

The pages accompanying this facsimile transmission contain information from the law office of Toler, Larson & Abel, L.L.P. and are confidential and privileged. The information is intended to be used by the individual(s) or entity(ies) named on this cover sheet only. If you are not the intended recipient be aware that reading, disclosing, copying, distribution or use of the contents of this transmission is prohibited. Please notify us immediately if you have received this transmission in error at the number listed above and return the document to us via regular mail.

UNITED STATES PATENT AND TRADEMARK OFFICE

Commissioner for Patents
United States Patent and Trademark Office
P.O. Box 1450
Alexandria, VA 22313-1450
www.uspto.gov

SEP 12 2005

WOODWARD, EMHARDT, MORIARTY, MCNETT & HENRY LLP
BANK ONE CENTER/TOWER
111 MONUMENT CIRCLE, SUITE 3700
INDIANOPLIS, IN 46204-5137

In re application of	:	**DECISION ON PETITION**
Earl Dallas Smith	:	**TO MAKE SPECIAL**
Application No. 10/736,214	:	**(APPLICANT'S AGE)**
Filed: December 15, 2003	:	
For: AXLELESS VEHICLE SUSPENSION SYSTEM		

This is a decision on the petition submitted on August 29, 2005 under 37 CFR 1.102 (c) to make the above-identified application special under the accelerated examination procedure set forth in MPEP 708.02, Section IV: Applicant's Age.

The petition is **GRANTED**.

An application may be accorded special status upon the filing of a petition providing evidence showing that the applicant is at least 65 years old. Such a showing may be provided by evidence such as a birth certificate or a statement from the applicant.

The evidence submitted with the petition is a signed declaration indicating Mr. Smith is at least 65 years of age.

The examiner is directed (1) to make an interference search for possible interfering applications, (2) to promptly examine this application out of turn, and (3) if any interfering application is discovered, to examine such application simultaneously and state in the first official letter of such application that it is being taken out of turn because of a possible interference.

Petitioner is advised that this application will continue to be special, throughout its entire prosecution and pendency, including interference or appeal, if any, only if petitioners makes a prompt ***bona fide*** effort, in response to each Office action, to place the application in condition for allowance, even if it is necessary to conduct an interview with the examiner to accomplish this purpose.

SUMMARY: Petition to Make Special **GRANTED**.

Kenneth J. Dorner
Special Programs Examiner
Technology Center 3600
(571) 272-6587

KJD/slb: 09/01/05

UNITED STATES PATENT AND TRADEMARK OFFICE

Commissioner for Patents
United States Patent and Trademark Office
P.O. Box 1450
Alexandria, VA 22313-1450
www.uspto.gov

NETWORK APPLIANCE/BSTZ
BLAKELY SOKOLOFF TAYLOR & ZAFMAN LLP
1279 OAKMEAD PARKWAY
SUNNYVALE CA 94085-4040

COPY MAILED

DEC 0 5 2008

OFFICE OF PETITIONS

In re Application of :
Muhlestein :
Application No. 10/736,217 :
Filed: December 15, 2003 :
Attorney Docket No. 5693P296CC :
For: BACKUP AND RESTORE FOR HETEROGENEOUS FILE SERVER ENVIRONMENT

ON PETITION

This is a decision on the petition under 37 CFR 1.181, filed October 15, 2008, to withdraw the holding of abandonment in the above-identified application.

The petition under 37 CFR 1.181 is **GRANTED**.

The Office contended that the above-identified application became abandoned for failure to timely reply to the Notice of Allowance and Fee(s) Due and the Notice of Allowability, which set a three month non-extendable period from the mail date of the Notices for reply. A Notice of Abandonment was mailed on August 21, 2008.

Petitioner alleges that the April 22, 2008 Notice of Allowance and Fee(s) Due was not received. It is assumed that petitioner intends to assert that the April 22, 2008 Notice of Allowability was not received, either.

The showing required to establish non-receipt of an Office communication must include:

1. A statement from the practitioner stating that the Office communication was not received by the practitioner and attesting to the fact that a search of the file jacket and docket records indicates that the Office communication was not received.
2. A copy of the docket record where the non-received Office communication would have been entered had it been received and docketed must be attached to and referenced in practitioner's statement.[1]

[1] See notice entitled "Withdrawing the Holding of Abandonment When Office Actions Are Not Received," 1156 O.G. 53 (November 16, 1993).

Petitioner has submitted a copy of the docket record where the requirements would have been entered had the April 22, 2008 Notices been received. In addition, practitioner referenced the docket record in the petition and stated that a review of the file jacket and docket records for the April 22, 2008 Notices was fruitless.

Petitioner has established non-receipt. The petition is **granted**, the August 21, 2008 Notice of Abandonment is vacated, and the holding of abandonment is withdrawn.

After the mailing of this decision, the application will be returned to Technology Center AU 2169 for the re-mailing of the April 22, 2008 Notice of Allowance and Fee(s) Due and Notice of Allowability with a new period set for reply.

Telephone inquiries may be directed to the undersigned at (571) 272-3230.

Shirene Willis Brantley
Senior Petitions Attorney
Office of Petitions

UNITED STATES PATENT AND TRADEMARK OFFICE

UNITED STATES DEPARTMENT OF COMMERCE
United States Patent and Trademark Office
Address: COMMISSIONER FOR PATENTS
P.O. Box 1450
Alexandria, Virginia 22313-1450
www.uspto.gov

APPLICATION NO.	FILING DATE	FIRST NAMED INVENTOR	ATTORNEY DOCKET NO.	CONFIRMATION NO.
10/736,272	12/15/2003	Ernest Patrick Hanavan III	5760-16500	3824

35690 7590 04/29/2008

MEYERTONS, HOOD, KIVLIN, KOWERT & GOETZEL, P.C.
P.O. BOX 398
AUSTIN, TX 78767-0398

EXAMINER	
PEIKARI, BEHZAD	

ART UNIT	PAPER NUMBER
2189	

MAIL DATE	DELIVERY MODE
04/29/2008	PAPER

Please find below and/or attached an Office communication concerning this application or proceeding.

The time period for reply, if any, is set in the attached communication.

UNITED STATES PATENT AND TRADEMARK OFFICE

COMMISSIONER FOR PATENTS
UNITED STATES PATENT AND TRADEMARK OFFICE
WASHINGTON, D.C. 20231
www.uspto.gov

MAILED

APR 29 2008

TECHNOLOGY CENTER 2100

MEYERTONS, HOOD, KIVLIN, KOWERT & GOETZEL, P.C.
P.O. BOX 398
AUSTIN TX 78767-0398

In re Application of: Ernest Patrick Hanavan III)
Application No. 10/736,272)
Attorney Docket No. 5760-16500)
Filed: December 15, 2003)
For: SERVER-FREE ARCHIVAL OF BACKUP DATA)

DECISION ON PETITION TO WITHDRAW RESTRICTION REQUIREMENT UNDER 37 CFR §1.144

This is a decision on the petition filed August 27, 2007 under 37 C.F.R. §1.144 and 37 C.F.R. §1.181 to withdraw an outstanding restriction requirement.

The petition is **GRANTED**.

RELEVANT PROSECUTION HISTORY

December 15, 2003	The application identified above was filed with claims 1-19.
January 3, 2006	A non-final Office action was mailed rejecting claims 1-19.
April 4, 2006	Response was filed with remarks, and no amendments.
June 13, 2006	A final Office action was mailed rejecting claims 1-19.
August 17, 2006	Response requesting reconsideration of final rejection was filed.
August 28, 2006	Advisory action was mailed holding the final rejection of claims 1-19.
September 18, 2006	RCE was filed including amendments to claims 1, 7, 11, 13, 14, and 18.
November 30, 2006	Restriction Requirement was mailed.
December 18, 2006	A paper was filed requesting reconsideration of the restriction requirement.
March 8, 2007	A non-final Office action was mailed rejecting claims 1-19, and making the restriction requirement final.

June 7, 2007	Response filed with amendments to claims 1 and 18.
July 26, 2007	Examiner indicated that application is in condition for allowance except for the presence of non-elected claims in the application. Applicant was given one month to cancel the noted claims or taker appropriate action under 37 CFR 1.144.
August 27, 2007	Instant petition filed requesting withdrawal of the restriction requirement.

REGULATIONS AND PRACTICE

37 C.F.R. § 1.143 states:

> If the applicant disagrees with the requirement for restriction, he may request reconsideration and withdrawal or modification of the requirement, giving the reasons therefor. (See § 1.111). In requesting reconsideration the applicant must indicate a provisional election of one invention for prosecution, which invention shall be the one elected in the event the requirement becomes final. The requirement for restriction will be reconsidered on such a request. If the requirement is repeated and made final, the examiner will at the same time act on the claims to the invention elected.

37 C.F.R. § 1.144 states:

> After a final requirement for restriction, the applicant, in addition to making any reply due on the remainder of the action, may petition the Commissioner to review the requirement ... A petition will not be considered if reconsideration of the requirement was not requested (see § 1.181).

37 C.F.R. § 1.145 states:

> If, after an office action on an application, the applicant presents claims directed to an invention distinct from and independent of the invention previously claimed, the applicant will be required to restrict the claims to the invention previously claimed if the amendment is entered, subject to reconsideration and review as provided in § § 1.143 and 1.144.

37 C.F.R. § 1.181 states:

> (a) Petition may be taken to the Commissioner:
> (1) From any action or requirement of any examiner in the ex parte prosecution of an application, or in ex parte or inter partes prosecution of a reexamination

proceeding which is not subject to appeal to the Board of Patent Appeals and Interferences or to the court;

(2) In cases in which a statute or the rules specify that the matter is to be determined directly by or reviewed by the Commissioner; and

(3) To invoke the supervisory authority of the Commissioner in appropriate circumstances. For petitions in interferences, see § 1.644.

(b) Any such petition must contain a statement of the facts involved and the point or points to be reviewed and the action requested. Briefs or memoranda, if any, in support thereof should accompany or be embodied in the petition; and where facts are to be proven, the proof in the form of affidavits or declarations (and exhibits, if any) must accompany the petition.

(c) When a petition is taken from an action or requirement of an examiner in the ex parte prosecution of an application, or in the ex parte or inter partes prosecution of a reexamination proceeding, it may be required that there have been a proper request for reconsideration (§ 1.111) and a repeated action by the examiner. The examiner may be directed by the Commissioner to furnish a written statement, within a specified time, setting forth the reasons for his or her decision upon the matters averred in the petition, supplying a copy to the petitioner.

MPEP § 803 states:

Under the statute an application may properly be required to be restricted to one of two or more claimed inventions only if they are able to support separate patents and they are either independent (MPEP § 806.04 - § 806.04(i)) or distinct (MPEP § 806.05 - § 806.05(i)).

If the search and examination of an entire application can be made without serious burden, the examiner must examine it on the merits, even though it includes claims to independent or distinct inventions.

CRITERIA FOR RESTRICTION BETWEEN PATENTABLY DISTINCT INVENTIONS

There are two criteria for a proper requirement for restriction between patentably distinct inventions:

(A) The inventions must be independent (see MPEP § 802.01, § 806.04, § 808.01) or distinct as claimed (see MPEP § 806.05 - § 806.05(i)); and

(B) There must be a serious burden on the examiner if restriction is required (see MPEP § 803.02, § 806.04(a) - § 806.04(i), § 808.01(a), and § 808.02).... For purposes of the initial requirement, a serious burden on the examiner may be *prima facie* shown if the examiner shows by appropriate explanation of separate classification, or separate status in the art, or a different field of search as defined in MPEP § 808.02....

MPEP 806.05(d) [R-5] Subcombinations Usable Together states:

> Two or more claimed subcombinations, disclosed as usable together in a single combination, and which can be shown to be separately usable, are usually restrictable when the subcombinations do not overlap in scope and are not obvious variants.
> > To support a restriction requirement where applicant separately claims plural subcombinations usable together in a single combination and claims a combination that requires the particulars of at least one of said subcombinations, both two-way distinctness and reasons for insisting on restriction are necessary. Each subcombination is distinct from the combination as claimed if:
> (A) the combination does not require the particulars of the subcombination as claimed for patentability (e.g., to show novelty and unobviousness), and
> (B) the subcombination can be shown to have utility either by itself or in another materially different combination.
>
> See MPEP § 806.05(c). Furthermore, restriction is only proper when there would be a serious burden if restriction were not required, as evidenced by separate classification, status, or field of search.

DECISION

37 C.F.R. § 1.181(c) requires that an action by an examiner, to be properly petitionable, must be followed by a request for reconsideration, and a repeated action by the examiner. 37 C.F.R. § 1.144 states that the applicant may petition the Commissioner after a final requirement for the restriction has been made. The response filed by applicant on 12/18/06, to the restriction requirement mailed on 11/30/2006, and the non-final action mailed by examiner on 3/8/07, making the restriction requirement final, satisfy the above requirements.

The issue presented in the petition is whether the restriction based on characterizing claims as being limited to subcombinations disclosed as usable together, is proper under the current regulations and practice.

> MPEP § 803 sets forth two criteria for a proper restriction requirement between patentably distinct inventions: (A) the inventions must be independent or distinct as claimed and (B) there must be a serious burden on the examiner.
>
> Furthermore, restriction is only proper when there would be a serious burden if restriction were not required, as evidenced by separate classification, status, or field of search.

The two groups of claims, Group I consisting of claims 1-6 and 18-19, and Group II consisting of claims 7-17, are both drawn to backup and archiving in a storage area network, and have overlapping scope. A search for the claimed invention of claim 1 would encompass the features of claim 7, except for the "freezing" and "thawing" of memory. The claim features at issue, the limitation "freezing the backup data to prevent the backup data from being altered" and "after completing the server-free copy, thawing the backup data so that the backup data may again be altered" were present in the original claim 7, presented with the application filed on December 15, 2003, and were searched/examined by the examiner through the FAOM mailed on January 3, 2006, Final Rejection mailed on June 13, 2006, Advisory Action mailed on August 28, 2006. Hence, examiner has failed to provide convincing evidence of serious burden if restriction were not required.

For the above reasons, the petition is **GRANTED**.

The restriction requirement is hereby **WITHDRAWN**.

The application will be forwarded to the examiner for consideration on the merits of claims 1-19.

Mano Padmanabhan
WQAS, Technology Center 2100
Computer Architecture, Software, and
Information Security
(571) 272-4210

UNITED STATES PATENT AND TRADEMARK OFFICE

Commissioner for Patents
United States Patent and Trademark Office
P.O. Box 1450
Alexandria, VA 22313-1450
www.uspto.gov

DUANE MORRIS LLP
P. O. BOX 1003
305 NORTH FRONT STREET, 5TH FLOOR
HARRISBURG, PA 17108-1003

COPY MAILED

NOV 0 3 2004

OFFICE OF PETITIONS

In re Application of :
Che-Yu Li :
Application No. 10/736,280 : ON PETITION
Filed: December 15, 2003 :
Attorney Docket No. H1823-00004 :

This is in response to the paper filed September 10, 2004 under 37 CFR 1.27(g) (2) requesting that status as a Small Entity be removed.

In accordance with the September 10, 2004 request, status as a Small Entity has been removed.

Telephone inquiries concerning this decision should be directed to the undersigned at (571) 272-3229.

The application matter is being forwarded to Office of Initial Patent Examination for further processing.

Retta Williams

Retta Williams
Petitions Examiner
Office of Petitions
Office of the Deputy Commissioner
for Patent Examination Policy

UNITED STATES PATENT AND TRADEMARK OFFICE

COMMISSIONER FOR PATENTS
UNITED STATES PATENT AND TRADEMARK OFFICE
P.O. BOX 1450
ALEXANDRIA, VA 22313-1450
WWW.USPTO.GOV

Paper No. None

Katherine J. Maples-Andrade
8415 South Pebble Creek Way #102
Highlands Ranch CO 80126

COPY MAILED

JUL 28 2005

OFFICE OF PETITIONS

In re Application of
Katherine J. Maples-Andrade et al.
Application No. 10/736,310
Filed: June 28, 2004
Title: SCENTED HAIR-STICKS

DECISION ON PETITION
UNDER 37 C.F.R. §1.137(b)

This is a decision on the petition filed July 8, 2005, pursuant to 37 C.F.R. §1.137(b)[1], to revive the above-identified application.

The above-identified application became abandoned for failure to reply in a timely manner to the Notice of Missing Parts (notice), mailed August 17, 2004, which set a shortened statutory period for reply of two (2) months. The notice indicated that an additional claim fee was due for 1 independent claim over 3. No response was received, and no extensions of time under the provisions of 37 C.F.R. §1.136(a) were requested. Accordingly, the above-identified application became abandoned on October 18, 2004.

With this petition, Petitioner submitted the petition fee, the proper statement of unintentional delay, and $43.

Petitioner has failed to meet the first requirement above. This requirement has not been satisfied because Petitioner did not submit the required reply to the Office action in full. The required reply is the reply sufficient to have avoided abandonment, had such reply been timely filed[2]. It is noted that the notice of August 17, 2004 indicated that the additional claim fee was $43. As of

1 A grantable petition pursuant to 37 CFR 1.137(b) must be accompanied by:
(1) The reply required to the outstanding Office action or notice, unless previously filed;
(2) The petition fee as set forth in § 1.17(m);
(3) A statement that the entire delay in filing the required reply from the due date for the reply until the filing of a grantable petition pursuant to this paragraph was unintentional. The Commissioner may require additional information where there is a question whether the delay was unintentional, and;
(4) Any terminal disclaimer (and fee as set forth in § 1.20(d)) required pursuant to paragraph (d) of this section.

2 See M.P.E.P. 711.03(c).

December 8, 2004 however, this fee was raised to $100[3] for a small entity. Since this petition was filed subsequent to that date, the fee due is $100. In order for the application to be revived, petitioner must submit the remainder of the additional claim fee: $57. The petition was not accompanied by an authorization to charge a Deposit Account.

Therefore, the petition must be **DISMISSED**.

On renewed petition, petitioner must submit the required reply, i.e. the remainder of the required surcharge.

Any response to this decision must be submitted within **TWO (2) MONTHS** from the mail date of this decision. Extensions of time under 37 CFR 1.136(a) are permitted. The response should include a cover letter entitled "Renewed Petition under 37 CFR 1.137(b)." The reply should display "Please deliver to Paul Shanoski, c/o Office of Petitions" in a prominent manner. The reply to this letter may be submitted by mail[4], hand-delivery[5], or facsimile[6].

Telephone inquiries regarding *this decision* should be directed to the undersigned at (571) 272-3225. All other inquiries concerning examination procedures or status of the application should be directed to the Technology Center.

It is noted that the address listed on the petition differs from the address of record. The application file does not indicate a change of correspondence address has been filed in this case, although the address given on the petition differs from the address of record. If petitioner desires to receive future correspondence regarding this application, the change of correspondence address must be submitted. A courtesy copy of this decision will be mailed to petitioner. However, all future correspondence will be directed to the address of record until such time as appropriate instructions are received to the contrary. Petitioner will not receive future correspondence related to this application unless Change of Correspondence Address, Patent Form (PTO/SB/122) is submitted for the above-identified application. For petitioner's convenience, a blank Change of Correspondence Address, Patent Form (PTO/SB/122), may be found at http://www.uspto.gov/web/forms/sb0122.pdf.

Paul Shanoski
Senior Attorney
Office of Petitions
United States Patent and Trademark Office

cc: Katherine J. Maples-Andrade
7662 S. Rosemary Cir.
Centennial, CO 80112

---

3 See http://www.uspto.gov/web/offices/ac/qs/ope/fee2004dec08.htm.

4 Mail Stop Petition, Commissioner for Patents, United States Patent and Trademark Office, P.O. Box 1450, Alexandria, VA, 22313-1450.

5 Customer Window, Mail Stop Petition, Crystal Plaza Two, Lobby, Room 1B03, Arlington, Virginia 22202.

6 (703) 872-9306 - please note this is a central facsimile number, and as such, there will be a delay in the delivery of the facsimile to the undersigned.

UNITED STATES PATENT AND TRADEMARK OFFICE

COMMISSIONER FOR PATENTS
UNITED STATES PATENT AND TRADEMARK OFFICE
P.O. BOX 1450
ALEXANDRIA, VA 22313-1450
WWW.USPTO.GOV

Paper No. None

KATHERINE MAPLES - ANDRADE & DAVID FRADKIN
7662 S. ROSEMARY CIRCLE
CENTENNIAL CO 80112

COPY MAILED

OCT 0 5 2005

OFFICE OF PETITIONS

In re Application of :
Katherine J. Maples-Andrade et al. :
Application No. 10/736,310 :
Filed: June 28, 2004 :
Title: SCENTED HAIR-STICKS :

DECISION ON RENEWED PETITION
UNDER 37 C.F.R. §1.137(b)

This is a decision on the renewed petition filed August 26, 2005, pursuant to 37 C.F.R. §1.137(b)[1], to revive the above-identified application.

The above-identified application became abandoned for failure to reply in a timely manner to the Notice of Missing Parts (notice), mailed August 17, 2004, which set a shortened statutory period for reply of two (2) months. The notice indicated that an additional claim fee was due for 1 independent claim over 3. No response was received, and no extensions of time under the provisions of 37 C.F.R. §1.136(a) were requested. Accordingly, the above-identified application became abandoned on October 18, 2004.

The original petition was submitted on July 8, 2005, and was dismissed via the mailing of a decision on July 28, 2005. The decision indicated that Petitioner submitted the petition fee, the proper statement of unintentional delay, and $43. The petition was dismissed as the fee submission was deficient (the amount due was $100).

With this renewed petition, Petitioner has submitted the remaining $57.

As such, the petition is **GRANTED**.

---

1 A grantable petition pursuant to 37 CFR 1.137(b) must be accompanied by:
(1) The reply required to the outstanding Office action or notice, unless previously filed;
(2) The petition fee as set forth in § 1.17(m);
(3) A statement that the entire delay in filing the required reply from the due date for the reply until the filing of a grantable petition pursuant to this paragraph was unintentional. The Commissioner may require additional information where there is a question whether the delay was unintentional, and;
(4) Any terminal disclaimer (and fee as set forth in § 1.20(d)) required pursuant to paragraph (d) of this section.

Telephone inquiries regarding *this decision* should be directed to the undersigned at (571) 272-3225. All other inquiries concerning examination procedures or status of the application should be directed to the Technology Center.

The Change of Correspondence Address has been entered and made of record.

Paul Shanoski
Senior Attorney
Office of Petitions
United States Patent and Trademark Office

UNITED STATES PATENT AND TRADEMARK OFFICE

Commissioner for Patents
United States Patent and Trademark Office
P.O. Box 1450
Alexandria, VA 22313-1450
www.uspto.gov

BUSKOP LAW GROUP, P.C.
1776 YORKTOWN
SUITE 550
HOUSTON TX 77056

COPY MAILED

JUL 14 2006

OFFICE OF PETITIONS

In re Application of	:	
Sacks et al.	:	
Application No. 10/736,369	:	ON PETITION
Filed: December 15, 2003	:	
Attorney Docket No. 1219.01	:	

This is a decision on the petition under 37 CFR 1.102(c)(1), filed June 20, 2006, to make the above-identified application special based on applicant's age as set forth in M.P.E.P. § 708.02, Section IV.

The petition is **GRANTED**.

A grantable petition to make an application special under 37 CFR 1.102(c)(1) and MPEP § 708.02, Section IV: Applicant's Age must be accompanied by evidence showing that at least one of the applicants is 65 years of age, or more, such as a birth certificate or a statement by applicant. No fee is required.

The instant petition includes a copy of the applicant's driver's license. Accordingly, the above-identified application has been accorded "special" status.

Telephone inquiries concerning this decision should be directed to the undersigned at 571-272-3206. All other inquiries concerning either the examination or status of the application should be directed to the Technology Center.

This matter is being referred to the Technology Center Art Unit 2626 for action on the merits commensurate with this decision.

Liana Chase
Petitions Examiner
Office of Petitions

United States
Patent And
Trademark Office

P.O. Box 1450, Alexandria, Virginia 22313-1450 – www.uspto.gov

PETITION DECISION

04/12/04

Jonathan M. Hines
Adams Evans P.A.
2180 Two Wachovia Center
Charlotte, NC 28282

Dear Applicant:

The Box PG Pub replacement drawings for application number 10/736382 received on 01/20/04 by the U. S. Patent and Trademark Office will be included for patent publication.

Telephone inquiries should be directed to Kaletus King, Office of Pre-Grant Publication 703 605-4283.

Kaletus King

Signature of Reviewer, Office of Pre-Grant Publication

UNITED STATES PATENT AND TRADEMARK OFFICE

COMMISSIONER FOR PATENTS
UNITED STATES PATENT AND TRADEMARK OFFICE
P.O. BOX 1450
ALEXANDRIA, VA 22313-1450
www.uspto.gov

Edward G. Greive
Renner, Kenner, Greive, Bobak, Taylor & Weber
Fourth Floor
First National Tower
Akron, OH 44308-1456

COPY MAILED

MAY 12 2006

OFFICE OF PETITIONS

In re Application of	:	
Watanabe et al.	:	
Application No. 10/736,384	:	
Filed: December 15, 2003	:	DECISION ON
Attorney Docket Number: KYO.P0024	:	PETITION

This is a decision in response to the Petition to Withdraw Holding of Abandonment Under 37 CFR 1.181(a), filed March 30, 2006.

This Petition is hereby **granted**.

The above-identified application became abandoned for failure to timely and properly respond to the non-final Office action, mailed September 21, 2005. The Office action set a three (3) month period for reply, and provided for extensions of time under 37 CFR 1.136(a). No response having been received, the application became abandoned on December 22, 2005. A Notice of Abandonment was mailed April 10, 2006.

With the instant petition, Petitioner has demonstrated non-receipt of the Notice by a preponderance of the evidence.

In view of the foregoing, the petition is granted. The holding of abandonment is hereby withdrawn.

No fee has been charged and none is due.

The application will be referred to Technology Center Art Unit 2875 for re-mailing of the Office action.

Telephone inquiries concerning this matter should be directed to the undersigned at (571) 272-3232.

Derek L. Woods
Attorney
Office of Petitions

UNITED STATES PATENT AND TRADEMARK OFFICE

Commissioner for Patents
United States Patent and Trademark Office
P.O. Box 1450
Alexandria, VA 22313-1450
www.uspto.gov

February 19, 2008

Edward G. Greive
RENNER, KENNER, GREIVE, BOBAK, TAYLOR & WEBER
Fourth Floor, First National Tower
Akron, OH 44308-1456

Patent No.: 7,210,825 B2
Application No.: 10/736,384
Inventor(s): Hiroshi Watanabe, et al.
Issued: May 1, 2007
Title: **LIGHT SOURCE DEVICE**

Re: Request for Certificate of Correction

Consideration has been given your request for the issuance of a certificate of correction for the above-identified patent under the provisions of Rule(s) 1.322 and/or 1.323.

Assignees' names and addresses (assignment data) printed in a patent, are based *solely* on information supplied in the appropriate space for identifying the assignment data, i.e., item 3 of the Issue Fee Transmittal Form PTOL-85B. Granting of a request under 37 CFR 3.81(b) is required to correct applicant's error providing ***incorrect or erroneous*** assignment data, *before* issuance of a Certificate of Correction, under 37 CFR 1.323 *(see Manual of Patent Examining Procedures (M.P.E.P) Chp.1400, sect. 1481).* This procedure is required *at any time after the issue fee is paid*, including after issuance of the patent.

In view of the foregoing, your request, in this matter, is hereby denied.

A request to correct the Assignee under 37 CFR 3.81(b) should include:

A. **the processing fee set forth in 37 CFR 1.117(h) (currently $130);**
B. a statement that the failure to include the correct assignee name on the PTOL-85B was inadvertent; and
C. a copy of the Notice of Recordation of Assignment Document, reflecting the reel and frame number where the assignment(s) is recorded and/or reflecting proof of *the date* the assignment was submitted for recordation.

In the Request, Applicant(s) may request that the file be forwarded to Certificates of Correction Branch, for issuance of a Certificate of Correction, if the Request is granted.

Any request under 37 CFR 3.81(b) should be directed to the following address or facsimile number:

By mail:	Mail Stop PETITIONS Commissioner for Patents Post Office Box 1450 Alexandria, VA 22313-1450
By hand:	Customer Service Window Mail Stop Petitions Randolph Building 401 Dulany Street Alexandria, VA 22314
By fax:	(571) 273-0025 ATTN: Office of Petitions

If a fee (currently $100) was previously submitted for consideration of a Request for Certificate of Correction, under CFR 1.323, to correct assignment data, no additional fee is required.

Virginia Tolbert
For Mary Diggs, Supervisor
Decisions & Certificate of Correction Branch
(703) 305-8309 or (703) **308-9390 ext 113**

vt

UNITED STATES PATENT AND TRADEMARK OFFICE

Commissioner for Patents
United States Patent and Trademark Office
P.O. Box 1450
Alexandria, VA 22313-1450
www.uspto.gov

EDWARD G. GREIVE
RENNER, KENNER, GREIVE, BOBAK, TAYLOR & WEBER
FOURTH FLOOR
FIRST NATIONAL TOWER
AKRON OH 44308-1456

COPY MAILED

JUN 04 2009

OFFICE OF PETITIONS

In re Patent No. 7,210,825
Application No. 10/736,384
Filed: December 15, 2003
Issued: May 1, 2007
Attorney Docket No. KYO.P0024

ON PETITION

This is a decision on the petition filed May 16, 2008, which is being treated as a request under 37 CFR 3.81(b)[1] to add the name of the second assignee on the front page of the above-identified patent by way of a Certificate of Correction.

The request is **GRANTED**.

This matter is being referred to the Certificates of Correction Branch for issuance of the requested Certificate of Correction.

Additionally, 37 CFR 3.81(b) requires payment of the $100.00 Certificate of Correction fee, which will be charged to petitioner's deposit account as authorized May 16, 2008.

Telephone inquiries concerning this decision may be directed to Joan Olszewski at (571) 272-7751. Inquiries regarding the issuance of a certificate of correction should be directed to the Certificate of Correction Branch at (571) 272-4200.

/Liana Walsh/
Liana Walsh
Petitions Examiner
Office of Petitions

[1] *See* MPEP 1309, subsection II; and Official Gazette of June 22, 2004.

UNITED STATES PATENT AND TRADEMARK OFFICE

COMMISSIONER FOR PATENTS
UNITED STATES PATENT AND TRADEMARK OFFICE
P.O. BOX 1450
ALEXANDRIA, VA 22313-1450
www.uspto.gov

WORLDCOM, INC
TECHNOLOGY LAW DEPARTMENT
1133 19TH STREET
WASHINGTON, DC 20036

COPY MAILED

JAN 10 2006

OFFICE OF PETITIONS

In re Application of :
Karen A. Gross, et al. :
Application No. 10/736,410 : ON PETITION
Filed: December 15, 2003 :
Attorney Docket No.: CDR96013C1 :
:

This is a decision on the petition, filed January 9, 2006, under 37 CFR 1.313(c)(2) to withdraw the above-identified application from issue after payment of the issue fee.

The petition is **GRANTED**.

The above-identified application is withdrawn from issue for consideration of a submission under 37 CFR 1.114 (request for continued examination). See 37 CFR 1.313(c)(2).

Petitioner is advised that the issue fee paid on December 23, 2005, in the above-identified application, cannot be refunded. If, however, the above-identified application is again allowed, petitioner may request that it be applied towards the issue fee required by the new Notice of Allowance.[1]

Telephone inquiries relating to this decision should be directed to the undersigned at (571) 272-3204.

The application is being referred to Technology Center AU 2645 for further processing of the request for continued examination under 37 CFR 1.114.

Sherry D. Brinkley
Petitions Examiner
Office of Petitions

[1]The request to apply the issue fee to the new Notice may be satisfied by completing and returning the new Issue Fee Transmittal Form PTOL-85(b), which includes the following language thereon: " Commissioner for Patents is requested to apply the Issue Fee and Publication Fee (if any) or re-apply any previously paid issue fee to the application identified above." Petitioner is advised that, whether a fee is indicated as being due or not, the Issue Fee Transmittal Form must be completed and timely submitted to avoid abandonment. Note the language in bold text on the first page of the Notice of Allowance and Fee(s) Due (PTOL-85).

UNITED STATES PATENT AND TRADEMARK OFFICE

Commissioner for Patents
United States Patent and Trademark Office
P.O. Box 1450
Alexandria, VA 22313-1450
www.uspto.gov

BUSKOP LAW GROUP, P.C.
1776 YORKTOWN
SUITE 550
HOUSTON TX 77056

COPY MAILED

JUL 1 1 2006

OFFICE OF PETITIONS

In re Application of :
Sacks et al. :
Application No. 10/736,427 : ON PETITION
Filed: December 15, 2003 :
Attorney Docket No. 1219.02 :

This is a decision on the petition under 37 CFR 1.102(c)(1), filed June 20, 2006, to make the above-identified application special based on applicant's age as set forth in M.P.E.P. § 708.02, Section IV.

The petition is **GRANTED**.

A grantable petition to make an application special under 37 CFR 1.102(c)(1) and MPEP § 708.02, Section IV: Applicant's Age must be accompanied by evidence showing that at least one of the applicants is 65 years of age, or more, such as a birth certificate or a statement by applicant. No fee is required.

The instant petition includes a copy of the applicant's driver's license. Accordingly, the above-identified application has been accorded "special" status.

Telephone inquiries concerning this decision should be directed to the undersigned at 571-272-3206. All other inquiries concerning either the examination or status of the application should be directed to the Technology Center.

This matter is being referred to the Technology Center Art Unit 3627 for action on the merits commensurate with this decision.

Liana Chase
Petitions Examiner
Office of Petitions

UNITED STATES PATENT AND TRADEMARK OFFICE

Commissioner for Patents
United States Patent and Trademark Office
P.O. Box 1450
Alexandria, VA 22313-1450
www.uspto.gov

THOMAS, KAYDEN, HORSTEMEYER & RISLEY, LLP
100 GALLERIA PARKWAY, NW
STE 1750
ATLANTA GA 30339-5948

COPY MAILED

APR 0 4 2007

OFFICE OF PETITIONS

In re Application of	:	
Liang-Tang, Huang	:	
Application No. 10/736,433	:	ON PETITION
Filed: December 15, 2003	:	
Attorney Docket No. 251209-1750	:	

This is a decision on the petition under 37 C.F.R. § 1.137(b), filed January 24, 2007, to revive the above-identified application.

The petition is **GRANTED.**

This matter is being referred to the Publishing Division for processing into a patent.

Telephone inquiries regarding this decision should be directed to the undersigned at (571) 272-3206.

Liana Walsh
Petitions Examiner
Office of Petitions

UNITED STATES PATENT AND TRADEMARK OFFICE

Commissioner for Patents
United States Patent and Trademark Office
P.O. Box 1450
Alexandria, VA 22313-1450
www.uspto.gov

MAILED

DEC 03 2007

TECHNOLOGY CENTER 2100

VERIGY
4700 INNOVATION WAY
BLDG D1
FORT COLLINS, CO 80528

In re Application of: HILDEBRANT, et al.
Application No. 10/736,438
Attorney Docket No. 10030775-1
Filed: 12/15/2003
For: SYSTEMS AND METHODS FOR ADAPTIVELY COMPRESSING TEST DATA

DECISION ON PETITION FOR SUPERVISORY REVIEW UNDER *37 CFR §1.181*

This is a decision on the petition under 37 CFR § 1.181, filed November 7, 2007, requesting the Commissioner to invoke his supervisory authority and withdraw the finality of the final Office action mailed August 7, 2007.

The petition is **GRANTED**.

RECENT PROSECUTION HISTORY

(1) On March 16, 2007, a non-final Office action was mailed. Claims 1-32 were pending, all claims were rejected on prior art.

(2) On June 14, 2007, a response to the non-final Office action, in which amendment to pending independent claims 1, 12, 17 and 28, was filed. Claims 2, 14, 18 and 30 were cancelled.

(3) On August 7, 2007, a final Office action was mailed which appeared to treat all of claims 1-32. The Examiner made this Office action final.

(4) On October 5, 2007, a proposed amendment and response after final (37 CFR § 1.116) was filed.

(5) On October 19, 2007, an advisory action was mailed indicated the proposed amendment would be entered for purposes of appeal.

(6) On November 7, 2007, the instant petition was filed, along with a Pre-Appeal Brief Request for Review and a Notice of Appeal.

RELIEF REQUESTED

The instant petition filed under 37 CFR 1.181 requests the withdrawal of the finality of the August 7, 2007 office action.

ANALYSIS

The relevant sections of the M.P.E.P. are set forth below:

MPEP § 706.07(a) states in part that:
Under present practice, second or any subsequent action on the merits shall be made final, except where the examiner introduces a new ground of rejection ***not necessitated*** by amendment of the application by the applicant, whether or not the prior art is already of record. Furthermore, a second or any subsequent action on the merits in any application or patent undergoing reexamination proceedings will ***not be made final*** if it includes a rejection, on newly cited art ... of any claim not amended by applicant or patent owner in spite of the fact that other claims may have been amended to require newly cited art.

MPEP § 706.07(d) states in part that:
If, on request by applicant for reconsideration, the primary examiner finds the final rejection to have been premature, he or she should withdraw the finality of the rejection.

MPEP § 706.07(e) states in part that:
When a final rejection is withdrawn, all amendments filed after the final rejection ***are ordinarily entered.***

CONCLUSION

A review of the prosecution record reveals that the Applicant's amendment to independent claims 1, 12, 17 and 28 after the non-final action on the merits mailed March 16, 2007 did not necessitate a new grounds of rejection made in the final Office action, as the amendment represents the limitations of now cancelled dependent claims 2, 14, 18 and 30 added to independent claims 1, 12, 17 and 28, respectively. In particular, dependent claims 14 and 30 were previously rejected under 35 USC 103(a) as being unpatentable over Ishida and further in view of Wang et al. (US Pub. 2006/0242502) (see non-final Office action, para. 20, of March 16, 2007). Their respective claim limitations having been added to independent claims 12 and 28 respectively, claims 12 and 28 are now currently rejected under 35 USC 102 (e) as being anticipated by Ishida (see final Office action, para. 2, of August 7, 2007). Petitioner's statement in support of the instant petition regarding the confusion with respect to the appropriate grounds of rejection regarding pending claims (in particular, claims 12 and 28) is well-taken.

By merely cancelling dependent claims and adding their limitations to their corresponding independent claims, the amendment filed June 14, 2007 represents a proper amendment under 37 CFR § 1.111.

For the above stated reasons, the petition to withdraw the finality of the final Office action of August 7, 2007 is **GRANTED**.

The application file is being forwarded to the technology support staff to **WITHDRAW** the finality of the previous Office action and to **ENTER** the amendment and response filed October 5, 2007, and to **PROCESS** the papers filed November 7, 2007. The file will then be forwarded to the Examiner for appropriate action and prompt consideration of the amendment of October 5, 2007 and the response filed November 7, 2007.

Any inquiries related to this decision may be directed to Quality Assurance Specialist Brian Johnson at (571) 272-3595.

Jack Harvey, Director
Technology Center 2100
Computer Architecture, Software, and Information Security

UNITED STATES PATENT AND TRADEMARK OFFICE

Commissioner for Patents
United States Patent and Trademark Office
P.O. Box 1450
Alexandria, VA 22313-1450
www.uspto.gov

AT&T Legal Department - CC
Attn: Patent Docketing
Room 2A-207
One AT&T Way
Bedminster NJ 079

MAILED

JUN 07 2010

OFFICE OF PETITIONS

In re Application of
STEVEN TISCHER
Application No. 10/736,440
Filed: December 15, 2003
Attorney Docket No. **030516 (BLL0145US)**

ON PETITION

This is a decision on the petition under 37 CFR 1.181 (no fee), filed March 2, 2010, requesting withdrawal of the holding of abandonment in the above-identified application which, for the reasons stated below, is being treated as a request for a two (2) month extension of time.

The request for a two (2) months extension of time is **GRANTED**.

The record shows that a Pre-Brief Appeal Conference Decision was mailed on December 7, 2009, which set a one (1) month shortened statutory period for reply. Accordingly, a reply was due on or before January 7, 2010, or on or before March 7, 2010, with the submission of a request for two-month extension of time and fee pursuant to the provisions of 37 CFR 1.136(a). Since petitioner may obtain an extension of time up to an including five (5) months, this case is not in fact abandoned. Accordingly, the filing of a petition to revive or a request for withdrawing the holding of abandonment is inappropriate until the maximum extendable period for reply has expired.

In view of the above, the request for two (2) months extension of time, filed March 3, 2010, has been granted.

The application file does not indicate a change of address has been filed in this case, although the address given on the petition differs from the address of record. A change of address should be filed in this case in accordance with MPEP 601.03. A courtesy copy of this decision is being mailed to the address noted on the petition. However, until otherwise instructed, all future correspondence regarding this application will be mailed solely to the address of record.

Inquiries concerning this decision may be directed to JoAnne Burke at (571) 272-4584.

This application is being referred to Technology center Group AU 2626 for processing the Appeal Brief filed March 3, 2010.

/Ramesh Krishnamurthy/
Ramesh Krishnamurthy
Petitions Examiner
Office of Petitions

cc: David A. Fox
Cantor Colburn LLP
20 Church Street
22nd Floor
Hartford, CT 06103

UNITED STATES PATENT AND TRADEMARK OFFICE

Commissioner for Patents
United States Patent and Trademark Office
P.O. Box 1450
Alexandria, VA 22313-1450
www.uspto.gov

COPY MAILED

JAN 0 5 2006

OFFICE OF PETITIONS

DAFFER MCDANEIL LLP
P.O. BOX 684908
AUSTIN, TX 78768

In re Application of :
Harry Schilling :
Application No. 10/736,446 : DECISION ON PETITION
Filed: December 15, 2003 : TO MAKE SPECIAL UNDER
Attorney Docket No. 5858-01800 : 37 CFR 1.102(d)
:

This is a decision on the petition under 37 CFR 1.102(d), filed December 2, 2005, to make the above-identified application special based on prospective manufacture as set forth in M.P.E.P. § 708.02, Section I.

The petition is **DISMISSED**.

A grantable petition to make an application special under 37 CFR 1.102(d) and MPEP § 708.02, Section I: Manufacture, must be accompanied by the required fee pursuant to 37 CFR 1.17(h) and a statement by the applicant, assignee, or attorney/agent registered to practice before the Office alleging:

> (A) The possession by the prospective manufacturer of sufficient presently available capital (stating approximately the amount) and facilities (stating briefly the nature thereof) to manufacture the invention in quantity or that sufficient capital and facilities will be made available if a patent is granted;
>
> If the prospective manufacturer is an individual, there must be a corroborating statement from some responsible party, as for example, an officer of a bank, showing that said individual has the required available capital to manufacture;
>
> (B) That the prospective manufacturer will not manufacture, or will not increase present manufacture, unless certain that the patent will be granted;
>
> (C) That the prospective manufacturer obligates himself, herself or itself, to manufacture the invention, in the United States or its possessions, in quantity

immediately upon the allowance of claims or issuance of a patent which will protect the investment of capital and facilities; and

(D) That the applicant or assignee has made or caused to be made a careful and thorough search of the prior art, or has a good knowledge of the pertinent prior art.

Applicant must provide one copy of each of the references deemed most closely related to the subject matter encompassed by the claims if said references are not already of record.

The petition states "Accompanying this petition is an Information Disclosure Statement reciting such prior art for consideration by the Examiner. The references being most closely related to the claimed subject matter are characterized within the captioned patent application specification, and are hereby placed of record in the Information Disclosure Statement filed herewith." The USPTO records do not show the Information Disclosure Statement was ever received; therefore, the petition is dismissed

Further correspondence with respect to this matter should be addressed as follows:

By Mail: Mail Stop PETITION
Commissioner for Patents
P. O. Box 1450
Alexandria, VA 22313-1450

By hand: U. S. Patent and Trademark Office
Customer Service Window, Mail Stop Petitions
Randolph Building
401 Dulany Street
Alexandria, VA 22314

By FAX: (571) 273-8300

Telephone inquiries concerning this decision should be directed to Irvin Dingle at 571-272-3210.

All other inquiries concerning either the examination or status of the application should be directed to the Technology Center.

The application is being forwarded to the Technology Center Art Unit 2633 for action in its regular turn.

Amelia Au
Petitions Examiner
Office of Petitions

UNITED STATES PATENT AND TRADEMARK OFFICE

Commissioner for Patents
United States Patent and Trademark Office
P.O. Box 1450
Alexandria, VA 22313-1450
www.uspto.gov

DAFFER MCDANEIL LLP
P.O. BOX 684908
AUSTIN, TX 78768

COPY MAILED

MAR 0 7 2006

OFFICE OF PETITIONS

In re Application of	:	
Harry Schilling	:	
Application No. 10/736,446	:	DECISION ON PETITION
Filed: December 15, 2003	:	TO MAKE SPECIAL UNDER
Attorney Docket No. 5858-01800	:	37 CFR 1.102(d)
	:	

This is a decision on the petition under 37 CFR 1.102(d), filed January 27, 2006, to make the above-identified application special based on prospective manufacture as set forth in M.P.E.P. § 708.02, Section I.

The petition is **GRANTED**.

A grantable petition to make an application special under 37 CFR 1.102(d), MPEP § 708.02, Section I: Manufacture, must be accompanied by the required fee pursuant to 37 CFR 1.17(h) and a statement by the applicant, assignee, or attorney/agent registered to practice before the Office alleging:

> (A) The possession by the prospective manufacturer of sufficient presently available capital (stating approximately the amount) and facilities (stating briefly the nature thereof) to manufacture the invention in quantity or that sufficient capital and facilities will be made available if a patent is granted; If the prospective manufacturer is an individual, there must be a corroborating statement from some responsible party, as for example, an officer of a bank, showing that said individual has the required available capital to manufacture;
>
> (B) That the prospective manufacturer will not manufacture, or will not increase present manufacture, unless certain that the patent will be granted;
>
> (C) That the prospective manufacturer obligates himself, herself or itself, to manufacture the invention, in the United States or its possessions, in quantity immediately upon the allowance of claims or issuance of a patent which will protect the investment of capital and facilities; and

(D) That the applicant or assignee has made or caused to be made a careful and thorough search of the prior art, or has a good knowledge of the pertinent prior art.

Additionally, Applicant must provide one copy of each of the references deemed most closely related to the subject matter encompassed by the claims if said references are not already of record.

The petition is signed by Kevin L. Daffer, attorney or record, and complies with the above stated requirements. Accordingly, the above-identified application has been accorded "special" status.

Telephone inquiries concerning this decision should be directed to Irvin Dingle at 571-272-3210.

All other inquiries concerning either the examination or status of the application should be directed to the Technology Center.

The application is being forwarded to the Technology Center Art Unit 2633 for action on the merits commensurate with this decision.

Amelia Au
Petitions Examiner
Office of Petitions

UNITED STATES PATENT AND TRADEMARK OFFICE

Commissioner for Patents
United States Patent and Trademark Office
P.O. Box 1450
Alexandria, VA 22313-1450
www.uspto.gov

AXIOS LAW GROUP, PLLC / REALNETWORKS, INC
1525 4TH AVE, STE 800
SEATTLE WA 98101-1648

MAILED

FEB 17 2009

OFFICE OF PETITIONS

In re Application of
Bobrovskiy et al.
Application No. 10/736,452
Filed: December 14, 2003
Attorney Docket No. REAL-2006034 (RN132)

DECISION ON PETITION

This is a decision on the petition, filed January 9, 2009, which is being treated as a petition under 37 CFR 1.181 (no fee) requesting withdrawal of the holding of abandonment in the above-identified application.

The petition is **GRANTED**.

This application was held abandoned for failure to timely pay the issue and publication fees on or before January 3, 2008, as required by the Notice of Allowance and Fee(s) Due (Notice), mailed October 3, 2008.

Petitioner asserts that the Notice of Allowance dated October 3, 2008 was not received.

A review of the written record indicates no irregularity in the mailing of the Office action, and, in the absence of any irregularity, there is a strong presumption that the Office action was properly mailed to the practitioner at the address of record. This presumption may be overcome by a showing that the Office action was not in fact received. In this regard, the showing required to establish the failure to receive the Office action must consist of the following:

1. a statement from practitioner stating that the Office action was not received by the practitioner. The statement should also describe the system used for recording an Office action received at the correspondence address of record and establish that the docketing system was sufficiently reliable;

2. a statement from the practitioner attesting to the fact that a search of the file jacket and docket records indicates that the Office action was not received; and

3. a copy of the master docket for the firm docket record where the nonreceived Office action would have been entered had it been received must be attached to and referenced in the practitioner's statement. If no master docket exists, the practitioner should so state and provide other evidence such, as but not limited: to the application file jacket, incoming mail log; calendar; reminder system or individual docket record for the application in question

See MPEP § 711.03(c) under subheading "Petition to Withdraw Holding of Abandonment Based on Failure to Receive Office Action," and "Withdrawing the Holding of Abandonment When Office Actions Are Not Received," 1156 Official Gazette 53 (November 16, 1993).

The petition satisfies the above-stated requirements. Accordingly, the application was not abandoned in fact.

In view of the above, the Notice of Abandonment is hereby vacated and the holding of abandonment withdrawn.

This application is being referred to the Technology Center AU 2169 technical support staff for **re-mailing** the Notice of Allowability and the Notice of Allowance and Fee(s) Due of October 3, 2008. The period for paying the issue and publication fees will be reset to expire three (3) months from the date the Notices are re-mailed. This period is not extendable under the provisions of 37 CFR 1.136.

Charlema Grant
Petitions Attorney
Office of Petitions

SPE RESPONSE FOR CERTIFICATE OF CORRECTION

Paper No.: _____

DATE : June 12, 2009

TO SPE OF : ART UNIT 2624

SUBJECT : Request for Certificate of Correction for Appl. No. 10/736455 patent No.: 7466848

Please respond to this request for a certificate of correction within 7 days.

Please review the requested changes/corrections as shown in the **COCIN** document(s) in the IFW application image. No new matter should be introduced, nor should the scope or meaning of the claims be changed.

Please complete the response (see below) and forward the completed response to scanning using document code **COCX**.

Magdalene Talley

Certificates of Correction Branch

703-308-9390 ext. 116

Thank You For Your Assistance

The request for issuing the above-identified correction(s) is hereby:

Note your decision on the appropriate box.

- ☒ **Approved** — **All** changes apply.
- ☐ **Approved in Part** — Specify below which changes **do not** apply.
- ☐ **Denied** — State the reasons for denial below.

Comments: _____

_____

_____

_____

_____

_____ _____

SPE **Art Unit**

SPE RESPONSE FOR CERTIFICATE OF CORRECTION

Paper No.: _____

DATE : June 12, 2009

TO SPE OF : ART UNIT 2624

SUBJECT : Request for Certificate of Correction for Appl. No. 10/736455 patent No.: 7466848

Please respond to this request for a certificate of correction within 7 days.

Please review the requested changes/corrections as shown in the **COCIN** document(s) in the IFW application image. No new matter should be introduced, nor should the scope or meaning of the claims be changed.

Please complete the response (see below) and forward the completed response to scanning using document code **COCX**.

Magdalene Talley

Certificates of Correction Branch

703-308-9390 ext. 116

Thank You For Your Assistance

The request for issuing the above-identified correction(s) is hereby:

Note your decision on the appropriate box.

- ☒ **Approved** — **All** changes apply.
- ☐ **Approved in Part** — Specify below which changes **do not** apply.
- ☐ **Denied** — State the reasons for denial below.

Comments: _____

/Bhavesh Mehta/SPE, TC 2600 — **SPE**

2624 — **Art Unit**

UNITED STATES PATENT AND TRADEMARK OFFICE

COMMISSIONER FOR PATENTS
UNITED STATES PATENT AND TRADEMARK OFFICE
P.O. BOX 1450
ALEXANDRIA, VA 22313-1450
WWW.USPTO.GOV

Paper No. None

MICHAEL A. O'NEIL, P.C.
5949 SHERRY LANE, SUITE 820
DALLAS TX 75225

COPY MAILED

NOV 1 8 2005

OFFICE OF PETITIONS

In re Application of :
Bradley F. Chmelka et al. :
Application No. 10/736,462 : DECISION ON PETITION
Filed: April 5, 2004 :
Attorney Docket No.: :
600950-1010 :
Title: BLOCK POLYMER PROCESSING :
FOR MESOSTRUCTURED INORGANIC :
OXIDE MATERIALS :

This is a decision on the petition filed October 25, 2005, requesting that the above-identified application be accorded a filing date of December 15, 2003, with Figures 2a and 2b included as part of the original disclosure.

The application was deposited on December 15, 2003. However, on March 24, 2004, the Office of Initial Patent Examination (OIPE) mailed a "Notice to File Missing Parts of Nonprovisional Application" (notice), stating that the application had been accorded a filing date of December 15, 2003, and advising applicants that the application appeared to have been deposited without Figure 2 and an oath or declaration. The notice set a two-month period for response.

In response, on April 5, 2004, applicants filed a declaration, the surcharge associated with the late submission of the same, Figures 2a and 2b, and a change of address. OIPE accepted the drawings, and assigned the application a filing date of April 5, 2004.

It is noted that the notice set forth two options for the applicant. The first set forth that if the applicant wished to

contend that the missing figure was present at the time of filing, a petition would need to be filed. The second indicated that a petition would be required should the applicant decide to supply the omitted item at a later date and accept this later date as his filing date.

With the present petition, it is clear that Petitioner seeks a third option - he wishes to introduce two figures which were not present on filing, yet retain the original filing date of December 15, 2003.

This cannot be done.

It is clear that Figure 2 was not present on filing. Petitioner has two options - Figures 2a and 2b, which were not present on filing, can be entered into the record if he accepts the date of their receipt, April 5, 2004, as the filing date. Alternatively, he may receive December 15, 2003 as the filing date and neither of these two figures will be entered into the record.

With the present petition, Petitioner has stated, over his registration number, that drawings are "not necessary to understand the subject matter sought to be patented[1]." Petitioner should note that accepting a filing date of December 15, 2003 without the entry of these two drawings does not preclude him from filing an amendment to present these two figures at a later date via the filing of an amendment which requests their entry. Any such amendment will, of course, be reviewed by the examiner for new matter[2].

As it is not clear which option Petitioner would prefer, the present petition must be **DISMISSED**.

Any reply must be submitted within **TWO (2) MONTHS** from the mail date of this decision. Extensions of time under 37 C.F.R. §1.136(a) are permitted. The reply should include a cover letter entitled "Renewed Petition Under 37 C.F.R. 1.53". This is not a final agency action within the meaning of 5 U.S.C 704.

The renewed petition should indicate in a prominent manner that the attorney handling this matter is Paul Shanoski, and may be submitted by mail[3], hand-delivery[4], or facsimile[5].

---

1 Petition, pages 1-2.
2 See MPEP 608.02(h) and 608.04.
3 Mail Stop Petition, Commissioner for Patents, United States Patent and Trademark Office, P.O. Box 1450, Alexandria, VA, 22313-1450.

Telephone inquiries regarding this decision should be directed to the undersigned at (571) 272-3225. All other inquiries concerning examination procedures or status of the application should be directed to the Technology Center.

Paul Shanoski
Senior Attorney
Office of Petitions
United States Patent and Trademark Office

4 Customer Window, Randolph Building, 401 Dulaney Street, Alexandria, VA, 22314.

5 (571) 273-8300- please note this is a central facsimile number.

UNITED STATES PATENT AND TRADEMARK OFFICE

COMMISSIONER FOR PATENTS
UNITED STATES PATENT AND TRADEMARK OFFICE
P.O. BOX 1450
ALEXANDRIA, VA 22313-1450
WWW.USPTO.GOV

Paper No. None

MICHAEL A. O'NEIL, P.C.
5949 SHERRY LANE, SUITE 820
DALLAS TX 75225

COPY MAILED

FEB 28 2006

OFFICE OF PETITIONS

In re Application of :
Bradley F. Chmelka et al. :
Application No. 10/736,462 : DECISION ON RENEWED
Filed: December 15, 2003 : PETITION
Attorney Docket No.: :
600950-1010 :
Title: BLOCK POLYMER PROCESSING :
FOR MESOSTRUCTURED INORGANIC :
OXIDE MATERIALS :

This is a decision on the renewed petition filed January 17, 2006, requesting that the above-identified application be accorded a filing date of December 15, 2003, without Figures 2a and 2b included as part of the original disclosure.

The application was deposited on December 15, 2003. However, on March 24, 2004, the Office of Initial Patent Examination (OIPE) mailed a "Notice to File Missing Parts of Nonprovisional Application" (notice), stating that the application had been accorded a filing date of December 15, 2003, and advising applicants that the application appeared to have been deposited without Figure 2 and an oath or declaration. The notice set a two-month period for response.

In response, on April 5, 2004, applicants filed a declaration, the surcharge associated with the late submission of the same, Figures 2a and 2b, and a change of address. OIPE accepted the drawings, and assigned the application a filing date of April 5, 2004.

It is noted that the notice set forth two options for the applicant. The first set forth that if the applicant wished to

contend that the missing figure was present at the time of filing, a petition would need to be filed. The second indicated that a petition would be required should the applicant decide to supply the omitted item at a later date and accept this later date as his filing date.

On October 25, 2005, Petitioner filed a petition, requesting that the two figures (which were not present on filing) be entered, and have the application accorded the original filing date of December 15, 2003. This request was dismissed via the mailing of a decision on November 18, 2005.

With this renewed petition, Petitioner has requested that the Office accord the original filing date to this application, without the entry of Figures 2a and 2b.

The renewed petition is **GRANTED**.

The application file is being returned to the Office of Initial Patent Examination for further processing with a filing date of December 15, 2003, using the original application papers filed on that date. Figures 2a and 2b will not be entered. OIPE will then mail a corrected filing receipt.

Telephone inquiries regarding this decision should be directed to the undersigned at (571) 272-3225. All other inquiries concerning examination procedures or status of the application should be directed to the Technology Center.

Paul Shanoski
Senior Attorney
Office of Petitions
United States Patent and Trademark Office

UNITED STATES PATENT AND TRADEMARK OFFICE

Commissioner for Patents
United States Patent and Trademark Office
P.O. Box 1450
Alexandria, VA 22313-1450
www.uspto.gov

DEERE & COMPANY
ONE JOHN DEERE PLACE
MOLINE IL 61265

COPY MAILED

AUG 1 8 2008

In re Application of :
Jason C. Eubanks et al. :
Application No. 10/736,465 : DECISION ON PETITION
Filed: December 15, 2003 :
Attorney Docket No. **16352-US** :

This is a decision on the petition under the unintentional provisions of 37 CFR 1.137(b), filed April 24, 2008, to revive the above-identified application.

The petition is **GRANTED**.

This application became abandoned as a result of petitioner's failure to file a complete and proper appeal brief within the time period provided in 37 CFR 41.37(a)(1). As a complete and proper appeal brief was not filed within one (1) month of the Notification of Non-Compliance with 37 CFR 41.37(c)(1), mailed April 05, 2006, and no extensions of time under the provisions of 37 CFR 1.136(a) were obtained, the appeal was dismissed and the proceedings as to the rejected claims were terminated. See 37 CFR 1.197(b). As no claim was allowed, the application became abandoned on May 06, 2006. See MPEP 1215.04.

The petition satisfies the requirements of 37 CFR 1.137(b) in that petitioner has supplied (1) the reply in the form of an Appeal Brief, (2) the petition fee of $1540, and (3) a proper statement of unintentional delay. Accordingly, the reply to the Notification of Non-Compliance of April 05, 2006 is accepted as having been unintentionally delayed.

As authorized, $510 fee for filing an Appeal Brief has been charged to the Deposit Account 04-0525.

There is no indication that the person signing the petition was ever given a power of attorney to prosecute the application. If the person signing the petition desires to receive future correspondence regarding this application, the appropriate power of attorney document must be submitted.

Telephone inquiries concerning this decision should be directed to Tredelle Jackson at (571) 272-2783.

This application is being referred to Technology Center AU 3671 for appropriate action by the Examiner.

Ramesh Krishnamurthy

Ramesh Krishnamurthy
Petitions Examiner
Office of Petitions

UNITED STATES PATENT AND TRADEMARK OFFICE

Commissioner for Patents
United States Patent and Trademark Office
P.O. Box 1450
Alexandria, VA 22313-1450
www.uspto.gov

ERIC K. SATERMO
P.O. BOX 60480
IRVINE CA 92602

MAILED

JAN 22 2009

OFFICE OF PETITIONS

In re Application of :
Pummer et al. :
Application No. 10/736,483 : DECISION ON PETITION
Filed: December 15, 2003 :
Attorney Docket No. 0317-01 :

This is a decision on the petition under the unintentional provisions of 37 CFR 1.137(b), filed October 14, 2008, to revive the above-identified application.

The petition is **DISMISSED**.

Any request for reconsideration of this decision must be submitted within TWO (2) MONTHS from the mail date of this decision. Extensions of time under 37 CFR 1.136(a) are permitted. The reconsideration request should include a cover letter entitled "Renewed Petition under 37 CFR 1.137(b)." This is **not** a final agency action within the meaning of 5 U.S.C. § 704.

The application became abandoned for failure to reply in a timely manner to the final Office action mailed January 13, 2006, which set a shortened statutory period for reply of three (3) months. No extensions of time under the provisions of 37 CFR 1.136(a) were obtained. Accordingly, the application became abandoned on April 14, 2006. A Notice of Abandonment was mailed August 9, 2006.

A grantable petition under 37 CFR 1.137(b) must be accompanied by: (1) the required reply, unless previously filed; (2) the petition fee as set forth in 37 CFR 1.17(m); (3) a statement that the entire delay in filing the required reply from the due date for the reply until the filing of a grantable petition pursuant to 37 CFR 1.137(b) was unintentional; and (4) any terminal disclaimer (and fee as set forth in 37 CFR 1.20(d)) required by 37 CFR 1.137(d). Where there is a question as to whether either the abandonment or the delay in filing a petition under 37 CFR 1.137 was unintentional, the Director may require additional information. *See* MPEP 711.03(c)(II)(C) and (D). The instant petition lacks item (3).

There are three periods to be considered during the evaluation of a petition under 37 CFR 1.137(b):

(1) the delay in reply that originally resulted in the abandonment;
(2) the delay in filing an initial petition pursuant to 37 CFR 1.137(b) to revive the application; and
(3) the delay in filing a grantable petition pursuant to 37 CFR 1.137(b) to revive the application.

Currently, the delay has not been shown to the satisfaction of the Director to be unintentional for periods (1) and (2).

As to Period (1):

The patent statute at 35 U.S.C. § 41(a)(7) authorizes the Director to revive an "unintentionally abandoned application." The legislative history of Public Law 97-247 reveals that the purpose of 35 U.S.C. § 41(a)(7) is to permit the Office to have more discretion than in 35 U.S.C. §§ 133 or 151 to revive abandoned applications in appropriate circumstances, but places a limit on this discretion, stating that "[u]nder this section a petition accompanied by either a fee of $500 or a fee of $50 **would not be granted where the abandonment** or the failure to pay the fee for issuing the patent **was intentional** as opposed to being unintentional or unavoidable." [emphasis added]. See H.R. Rep. No. 542, 97th Cong., 2d Sess. 6-7 (1982), *reprinted in* 1982 U.S.C.C.A.N. 770-71. The revival of an intentionally abandoned application is antithetical to the meaning and intent of the statute and regulation.

35 U.S.C. § 41(a)(7) authorizes the Director to accept a petition "for the revival of an unintentionally abandoned application for a patent." As amended December 1, 1997, 37 CFR 1.137(b)(3) provides that a petition under 37 CFR 1.137(b) must be accompanied by a statement that the delay was unintentional, but provides that "[t]he Commissioner may require additional information where there is a question whether

the delay was unintentional." Where, as here, there is a question whether the initial delay was unintentional, the petitioner must meet the burden of establishing that the delay was unintentional within the meaning of 35 U.S.C. § 41(a)(7) and 37 CFR 1.137(b). *See* In re Application of G, 11 USPQ2d 1378, 1380 (Comm'r Pats. 1989); 37 CFR 1.137(b). Here, in view of the inordinate delay (two and one-half years) in resuming prosecution, there is a question whether the entire delay was unintentional. Petitioner should note that the issue is not whether some of the delay was unintentional by any party; rather, the issue is whether the entire delay has been shown to the satisfaction of the Director to be unintentional.

The question under 37 CFR 1.137(b) for period (1) is whether the delay on the part of the party having the right or authority to reply to avoid abandonment (or not reply) was unintentional. Accordingly, any renewed petition must clearly identify the party having the right to reply to avoid abandonment on April 14, 2006. That party, in turn must explain what effort(s) was made to further reply to the outstanding Office action and, further, why no reply was filed. If no effort was made to further reply, then that party must explain why the delay in this application does not result from a deliberate course of action (or inaction). Likewise, as Eric K. Satermo was counsel of record at the time of abandonment, he should explain why this application became abandoned while it was under his control and what efforts were made to further reply of itself and with whom this matter was discussed outside of the practice of Eric K. Satermo. Copies of any correspondence relating to the filing, or to not filing a further reply to the outstanding Office action are required from responsible person(s), Eric K. Satermo and whoever else was involved with this application at the time of abandonment. Statements are required from any and all persons then at the practice of Eric Satermo, and the responsible person(s) having firsthand knowledge of the circumstances surrounding the lack of a reply to the outstanding Office action. As the courts have made clear, it is pointless for the USPTO to revive a long abandoned application without an adequate showing that the delay did not result from a deliberate course of action. *See* Lawman Armor v. Simon, 2005 U.S. Dist. LEXIS 10843, 74 USPQ2d 1633 (DC EMich 2005); Field Hybrids, LLC v. Toyota Motor Corp., 2005 U.S. Dist. LEXIS 1159 (D. Minn Jan. 27, 2005); Lumenyte Int'l Corp. v. Cable Lite Corp., Nos. 96-1011, 96-1077, 1996 U.S. App. LEXIS 16400, 1996 WL 383927 (Fed. Cir. July 9, 1996) (unpublished) (patents held unenforceable due to a finding of inequitable conduct in submitting an inappropriate statement that the abandonment was unintentional).

As to Period (2):

Likewise, where the applicant deliberately chooses not to seek or persist in seeking the revival of an abandoned application, or where the applicant deliberately chooses to delay seeking the revival of an abandoned application, the resulting delay in seeking revival of the abandoned application cannot be considered as "unintentional" within the meaning of 37 CFR 1.137(b). *See* MPEP 711.03(c).

The language of both 35 U.S.C. § 41(a)(7) and 37 CFR 1.137(b) are clear and unambiguous, and, furthermore, without qualification. That is, the delay in filing the reply during prosecution, as well as in filing the petition seeking revival, must have been, without qualification, "unintentional" for the reply to now be accepted on petition. The Office requires that the entire delay be at least unintentional as a prerequisite to revival of an abandoned application to prevent abuse and injury to the public. *See* H.R. Rep. No. 542, 97th Cong., 2d Sess. 7 (1982), reprinted in 1982 U.S.C.C.A.N. 771 ("[i]n order to prevent abuse and injury to the public the Commissioner . . . could require applicants to act promptly after becoming aware of the abandonment"). The December 1997 change to 37 CFR 1.137 did not create any new right to overcome an intentional delay in seeking revival, or in renewing an attempt at seeking revival, of an abandoned application. *See* Changes to Patent Practice and Procedure; Final Rule Notice, 62 Fed. Reg. 53131, 53160 (October 10, 1997), 1203 Off. Gaz. Pat. Office 63, 87 (October 21, 1997), which clearly stated that any protracted delay (here, two and one-half years) could trigger, as here, a request for additional information. As the courts have since made clear, a protracted delay in seeking revival, as here, requires a petitioner's detailed explanation seeking to excuse the delay as opposed to USPTO acceptance of a general allegation of unintentional delay. *See* Lawman Armor v. Simon, 2005 U.S. Dist. LEXIS 10843, 74 USPQ2d 1633, at 1637-8 (DC EMich 2005); Field Hybrids, LLC v. Toyota Motor Corp., 2005 U.S. Dist. LEXIS 1159 (D. Minn Jan. 27, 2005) at *21-*23. Statements are required from any and all persons then at the practice of Eric K. Satermo and the responsible person(s) having firsthand knowledge of the circumstances surrounding the protracted delay, after the abandonment date, in seeking revival.

As noted in MPEP 711.03(c)(II), subsection D, in instances in which such petition was not filed within 1 year of the date of abandonment of the application, applicants should include:

> (A) the date that the applicant first became aware of the abandonment of the application; and
> (B) a showing as to how the delay in discovering the abandoned status of the application occurred despite the exercise of due care or diligence on the part of the applicant.

In either instance, applicant's failure to carry the burden of proof to establish that the "entire" delay was "unavoidable" or "unintentional" may lead to the denial of a petition under 37 CFR 1.137(b), regardless of the circumstances that originally resulted in the abandonment of the application. *See also* New York University v. Autodesk, 2007 U.S. DIST LEXIS, U.S. District LEXIS 50832, *10 -*12 (S.D.N.Y. 2007)(protracted delay in seeking revival undercuts assertion of unintentional delay).

Petitioner's request for change of correspondence address has been accepted.

Any renewed petition may be addressed as follows:

By Mail: Mail Stop PETITION
Commissioner for Patents
P. O. Box 1450
Alexandria, VA 22313-1450

By hand: U. S. Patent and Trademark Office
Customer Service Window, Mail Stop Petitions
Randolph Building
401 Dulany Street
Alexandria, VA 22314

The centralized facsimile number is **(571) 273-8300.**

Correspondence regarding this decision may also be filed through the electronic filing system of the USPTO.

To expedite consideration, petitioner may wish to contact the undersigned regarding the filing of the renewed petition under 37 CFR 1.137(b).

Telephone inquiries concerning this decision should be directed to Joan Olszewski at (571) 272-7751.

/Liana Walsh/
Liana Walsh
Petitions Examiner
Office of Petitions

UNITED STATES PATENT AND TRADEMARK OFFICE

Commissioner for Patents
United States Patent and Trademark Office
P.O. Box 1450
Alexandria, VA 22313-1450
www.uspto.gov

ERIC K. SATERMO
P.O. BOX 60882
IRVINE CA 92602

COPY MAILED

AUG 0 5 2009

OFFICE OF PETITIONS

In re Application of	:	
Pummer et al.	:	
Application No. 10/736,483	:	DECISION ON PETITION
Filed: December 15, 2003	:	
Attorney Docket No. 0317-01	:	

This is a decision on the renewed petition under the unintentional provisions of 37 CFR 1.137(b), filed June 29, 2009, to revive the above-identified application.

The petition is **GRANTED**.

The petition satisfies the requirements of 37 CFR 1.137(b) in that petitioner has supplied (1) the reply in the form of a proper After-Final Amendment, (2) the petition fee of $810.00 (previously paid October 14, 2008), and (3) a proper statement of unintentional delay.

Telephone inquiries concerning this decision should be directed to the undersigned at (571) 272-7751.

This application is being referred to Technology Center AU 2618 for examination in due course.

Joan Olszewski
Petitions Examiner
Office of Petitions

UNITED STATES PATENT AND TRADEMARK OFFICE

Commissioner for Patents
United States Patent and Trademark Office
P.O. Box 1450
Alexandria, VA 22313-1450
www.uspto.gov

OGILVY RENAULT LLP
1981 MCGILL COLLEGE AVENUE
SUITE 1600
MONTREAL, QC H3A2Y3
CANADA

COPY MAILED

JUN 3 0 2005

OFFICE OF PETITIONS

In re Application of :
Claude Lesage :
Application No. 10/736,497 : ON PETITION
Filed: December 17, 2003 :
Attorney Docket No. 10562-35US GH/IK :

This is a decision on the renewed petition under 37 CFR 1.137(b), filed March 22, 2005, to revive the above-identified application.

The petition is **GRANTED.**

The above-identified application became abandoned for failure to submit formal drawings in a timely manner in reply to the Notice of Allowability mailed October 7, 2004, which set a statutory period for reply of three (3) months. Accordingly, the above-identified application became abandoned at midnight on January 7, 2005.

37 CFR 1.137(b)(3) requires a statement that the entire delay in filing the required reply from the due date for the reply until the filing of a grantable petition pursuant to 37 CFR 1.137(b) was unintentional. If the statement contained in the instant petition varies from the language required by 37 CFR 1.137(b)(3), it will be interpreted as the required statement. Petitioner must notify the Office if this is **not** a correct interpretation of the statement contained in the instant petition.

The petition satisfies the conditions for revival pursuant to the provisions of 37 CFR 1.137(b) in that (1) the reply in the form of Formal Drawings; (2) the petition fee; and (3) the required statement of unintentional delay have been received. Accordingly, the issue fee is accepted as having been unintentionally delayed.

Telephone inquiries concerning this decision should be directed to the undersigned at (571) 272-3229.

This application matter is being forwarded to the Publishing Division for further processing.

Retta Williams

Retta Williams
Petitions Examiner
Office of Petitions
Office of the Deputy Commissioner
for Patent Examination Policy

SPE RESPONSE FOR CERTIFICATE OF CORRECTION

Paper No.: 04/1/06

DATE : 01/17/06

TO SPE OF : ART UNIT **2882**

SUBJECT : Request for Certificate of Correction on Patent No.: 10/736508 6946642

A response is requested with respect to the accompanying request for a certificate of correction.

Please complete this form and return with file, within **7** days to:
Palm location **7580, Certificates of Correction Branch – South Tower – 9A22**
If response is for an IFW, **return to employee (named below) via PUBSCofC Team in MADRAS.**
With respect to the change(s) requested, correcting Office and/or Applicant's errors, should the patent read as shown in the certificate of correction (COCIN)? No new matter should be introduced, nor should the scope or meaning of the claims be changed.

Thank You For Your Assistance

Angela Green
Certificates of Correction Branch
Tel. No. 703-305-9380 ext. 123

The request for issuing the above-identified correction(s) is hereby:
Note your decision on the appropriate box.

- [X] **Approved** — **All** changes apply.
- [ ] **Approved in Part** — Specify below which changes **do not** apply.
- [ ] **Denied** — State the reasons for denial below.

Comments:

EDWARD L. COLEMAN
SUPERVISORY PATENT EXAMINER

2882

SPE **Art Unit**

UNITED STATES PATENT AND TRADEMARK OFFICE

Commissioner for Patents
United States Patent and Trademark Office
P.O. Box 1450
Alexandria, VA 22313-1450
www.uspto.gov

BASF CATALYSTS LLC
101 WOOD AVENUE
ISELIN, NJ 08830

COPY MAILED

AUG 14 2006

OFFICE OF PETITIONS

In re Application of :
Frank Bagala, Sr. et al :
Application No. 10/736,553 : ON PETITION
Filed: December 17, 2003 :
Attorney Docket No. 4912A :

This is a decision on the petition under 37 CFR 1.137(b), filed March 15, 2006, to revive the above-identified application.

The petition is **GRANTED**.

The above-identified application became abandoned for failure to reply in a timely manner to the non-final Office action mailed August 23, 2005, which set a shortened statutory period for reply of three (3) months. No extension of time under the provisions of 37 CFR 1.136(a) were obtained. Accordingly, the above-identified application became abandoned on November 23, 2005.

Telephone inquiries concerning this decision should be directed to Irvin Dingle at (571) 272-3210.

This matter is being referred to Technology Center AU 1755 for further processing.

Irvin Dingle
Petitions Examiner
Office of Petitions

UNITED STATES PATENT AND TRADEMARK OFFICE

Commissioner for Patents
United States Patent and Trademark Office
P.O. Box 1450
Alexandria, VA 22313-1450
www.uspto.gov

MCCARTHY TETRAULT LLP
BOX 48, SUITE 4700,
66WELLINGTON STREET WEST
TORONTO ON M5K 1E6 CA CANADA

COPY MAILED

SEP 25 2007

OFFICE OF PETITIONS

In re Application of :
BIRNBOIM, et al. :
Application No. 10/736,555 : DECISION ON PETITION
Filed: December 17, 2003 : TO WITHDRAW
Attorney Docket No. 198443-365136(T01413-000) : FROM RECORD
:

This is a decision on the Request to Withdraw as attorney or agent of record under 37 C.F.R. § 1.36(b), filed May 4, 2007.

The request is **NOT APPROVED** as moot.

A review of the file record indicates that the power of attorney to **MCCARTHY TETRAULT LLP** has been revoked by the assignee of the patent application on July 17, 2007. Accordingly, the request to withdraw under 37 C.F.R. § 1.36(b) is moot.

All future communications from the Office will continue to be directed to the below-listed address until otherwise notified by applicant.

Telephone inquires concerning this decision should be directed to the undersigned at 571-272-7253.

Monica A. Graves
Petitions Examiner
Office of Petitions

cc: BIO TECHNOLOGY LAW GROUP
C/O PORTFOLIOIP
P.O. BOX 52050
MINNEAPOLIS, MN 55402

UNITED STATES PATENT AND TRADEMARK OFFICE

Commissioner for Patents
United States Patent and Trademark Office
P.O. Box 1450
Alexandria, VA 22313-1450
www.uspto.gov

SHLESINGER, ARKWRIGHT & GARVEY LLP
1420 KING STREET
SUITE 600
ALEXANDRIA VA 22314

In re Application of Chi Lung NGAN	:	
Application No.: 10/736,586	:	
Filing Date: December 17, 2003	:	DECISION ON PETITION
Attorney Docket No.:7307-1	:	
Title of Invention:	:	
MAGNETIZED CARD HOLDER	:	Date Mailed: March 9, 2005

This is a decision on the petition filed February 15, 2005, requesting that the publication fee paid on February 15, 2005 be refunded.

On March 24, 2004, the Office mailed a filing receipt to notify the applicant that the above-identified application is scheduled to be published under 35 U.S.C. 122(b). The application published on December 30, 2004.

On February 15, 2005, *inter alia*, the present petition, including a copy of a stamped post card receipt and a copy of a nonpublication request that includes a certification under 35 U.S.C. 122(b)(2)(B)(i) was filed. Petitioner alleges that the original nonpublication request was filed with the application papers for the above-identified application on December 17, 2003. To support his allegation, petitioner provides a true copy of the originally-filed nonpublication request and a copy of the post card receipt.

Upon review of the Office record for the above-identified application, the alleged originally-filed nonpublication request was not in the application file. The copy of the post card receipt submitted by the petitioner as *prima facie* evidence of receipt in the Office of the alleged originally-filed nonpublication request shows a list of the contents of the application papers and a nonpublication request under 35 U.S.C. 122(b)(2)(B)(i). The post card receipt also shows an "Office Date" stamp of December 17, 2003.

In view of the above, the petition is granted to the extent that the publication fee paid on February 15, 2005 will be refunded.

The $300.00 publication fee, which has been charged to counsel's deposit account, will be credited to counsel's Deposit Account No. 19-2105.

Telephone inquiries concerning this decision should be directed to the Pre-Grant Publication Division at (703) 605-4283.

Tammy Koontz
Manager, Pre-Grant Publication Division
Office of Patent Publication

UNITED STATES PATENT AND TRADEMARK OFFICE

Commissioner for Patents
United States Patent and Trademark Office
P.O. Box 1450
Alexandria, VA 22313-1450
www.uspto.gov

OLIFF & BERRIDGE, PLC
P.O. BOX 19928
ALEXANDRIA, VA 22320

COPY MAILED

MAR 27 2007

OFFICE OF PETITIONS

In re Patent of Liu et al. :
Patent No. 7,091,902 :
Issue Date: August 15, 2006 : Decision on Petition
Application No. 10/736,601 :
Filing Date: December 17, 2003 :
Attorney Docket No. 116146 :

This is a decision in response to the paper filed November 15, 2006, which is being treated as a request under 37 CFR 3.81 to accept the correction of the assignee data on the front page of the above-identified patent.

The request under 37 CFR 3.81 is **GRANTED**.

37 CFR 3.81(b) reads:

> Any request for issuance of an application in the name of the assignee submitted after the date of payment of the issue fee, and any request for a patent to be corrected to state the name of the assignee, must state that the assignment was submitted for recordation as set forth in § 3.11 before issuance of the patent, and must include a request for a certificate of correction under § 1.323 of this chapter (accompanied by the fee set forth in § 1.20(a)) and the processing fee set forth in § 1.17(i) of this chapter.

In other words, the request under 37 CFR 3.81(b) will be granted when:

(1) a request under 37 CFR 3.81 and the fee set forth in 37 CFR 1.17(i) are filed,
(2) the assignment was submitted for recordation prior to issuance of the patent, and
(3) a request for a certificate of correction and the fee set forth in 37 CFR 1.20(a) are submitted.

Patentees have met the requirements set forth above. Therefore, the request is granted.

The Certificates of Correction Branch will issue the requested certificate of correction in due course.

Telephone inquiries regarding this communication should be directed to Petitions Attorney Steven Brantley at (571) 272-3203.

Charles Steven Brantley
Senior Petitions Attorney
Office of Petitions

UNITED STATES PATENT AND TRADEMARK OFFICE

Commissioner for Patents
United States Patent and Trademark Office
P.O. Box 1450
Alexandria, VA 22313-1450
www.uspto.gov

8/11/05

WK

In re Application of	:	
Qingfang Leng	:	
Serial Number: 10/736,613	:	DECISION
Filed: December 17, 2003	:	ON
For: Determination of Physical Qualities of Lubricant	:	PETITION

This is in response to the request filed June 16, 2005, requesting permission for withdrawal as attorney from the above-identified application.

The Commissioner of Patents and Trademarks requires that there be at least 30 days between approval of withdrawal and the later of the expiration date of a time period for reply or the expiration date of the period which can be obtained by a petition and fee for extension of time under 37 CFR 1.136(a). This is so that the applicant will have sufficient time to obtain other representation or take other action. If a period has been set for reply and the period may be extended without a showing of cause pursuant to 37 CFR 1.136(a) by filing a petition for extension of time and fee, the practitioner will not be required to seek such extension of time for withdrawal to be approved. In such a situation, however, withdrawal will not be approved unless at least 30 days would remain between the date of approval and the last date on which such a petition for extension of time and fee could properly be filed.

In this case there is less than thirty days between approval of withdrawal of the current attorney of record and the expiration date of a time response period.

The Request is **Denied**.

Jacqueline M. Stone

Jacqueline Stone, Director
Technology Center 1700
Chemical and Materials Engineering

Stanley Z. Cole
26620 St Francis Road
Los Altos Hills CA 94022

UNITED STATES PATENT AND TRADEMARK OFFICE

Commissioner for Patents
United States Patent and Trademark Office
P.O. Box 1450
Alexandria, VA 22313-1450
www.uspto.gov

MAILED

JUN 22 2006

Technology Center 2100

MATTINGLY, STANGER, MALUR &
BRUNDIDGE, P.C.
1800 DIAGONAL ROAD
SUITE 370
ALEXANDRIA, VA 22314

In re Application of: Nakamura, et al.
Application No. 10/736,630
Filed: December 17, 2003
For: DISTRIBUTED FILE SYSTEM

DECISION ON PETITION
TO MAKE SPECIAL
(ACCELERATED EXAMINATION)
UNDER M.P.E.P. §708.02 (VIII)

This is a response to the petition filed July 14, 2005, under 37 C.F.R. §1.102(d) and M.P.E.P. §708.02 (VIII): Accelerated Examination, to make the above-identified application special.

The Petition is **DISMISSED**.

M.P.E.P. §708.02, Section VIII which sets out the prerequisites for a grantable petition for Accelerated Examination under 37 C.F.R. §1.102(d) states in relevant part:

A new application (one which has not received any examination by the examiner) may be granted special status provided that applicant (and this term includes applicant's attorney or agent) complies with each of the following items:

(a) Submits a petition to make special accompanied by the fee set forth in 37 CFR 1.17(h);

(b) Presents all claims directed to a single invention, or if the Office determines that all the claims presented are not obviously directed to a single invention, will make an election without traverse as a prerequisite to the grant of special status;

(c) Submits a statement(s) that a pre-examination search was made, listing the field of search by class and subclass, publication, Chemical Abstracts, foreign patents, etc. The pre-examination search must be directed to the invention as claimed in the application for which special status is requested. A search made by a foreign patent office satisfies this requirement;

(d) Submits one copy each of the references deemed most closely related to the subject matter encompassed by the claims if said references are not already of record; and

(e) Submits a detailed discussion of the references, which discussion points out, with the particularity required by 37 CFR 1.111 (b) and (c), how the claimed subject matter is patentable over the references.

The petition filed July 14, 2005 fails to adequately meet requirements (c) and (e) of the criteria set forth above. With respect to requirement (c), it would appear upon review of the claimed invention and the required search area, that a search of class 709 (ELECTRICAL COMPUTERS AND DIGITAL PROCESSING SYSTEMS: MULTICOMPUTER DATA TRANSFERRING) subclass 217 (REMOTE DATA ACCESSING) is necessary in order to complete the required search area for the claims of the instant application. With respect to requirement (e), a complete detailed discussion of the (aforementioned most closely related) references has not been provided with the necessary specificity required under 37 CFR 1.111 (b) and (c). Specifically, Petitioner should ensure that the above discussion is directed to how the language of ***each of*** the independent claims is specifically distinguishable and patentable from the references provided in requirement (d) above. Reference is made to independent claims 1 and 6 (of the instant application). It appears that Petitioner has incorporated limitations found in dependent claims 2 and 7 respectively, ***in the discussion of how independent claims 1 and 6 are patentable over the references cited*** to be most closely related.

Petition to Make Special **DISMISSED**.

Petitioner is given one opportunity to perfect the petition. Any request for reconsideration must be filed within TWO MONTHS of the mail date of this decision.

Until the renewed petition is submitted, the application will be returned to the examiner's docket to await treatment on the merits in the normal order of examination.

Brian L. Johnson
Special Program Examiner
Technology Center 2100
Computer Architecture, Software and Information Security
571-272-3595

UNITED STATES PATENT AND TRADEMARK OFFICE

Commissioner for Patents
United States Patent and Trademark Office
P.O. Box 1450
Alexandria, VA 22313-1450
www.uspto.gov

MAILED

APR 27 2007

Technology Center 2100

MATTINGLY, STANGER, MALUR & BRUNDIDGE, P.C.
1800 DIAGONAL ROAD
SUITE 370
ALEXANDRIA, VA 22314

In re Application of: Nakamura, et al.
Application No. 10/736,630
Filed: December 17, 2003
For: DISTRIBUTED FILE SYSTEM

DECISION ON PETITION
TO MAKE SPECIAL
(ACCELERATED EXAMINATION)
UNDER M.P.E.P. §708.02 (VIII)

This is a decision on the Request for Reconsideration filed August 22, 2006 on the petition to make special under 37 C.F.R. §102(d) and M.P.E.P. §708.02(VIII): Accelerated Examination, originally filed on July 14, 2005 and dismissed on June 22, 2006.

The Petition is **GRANTED**.

M.P.E.P. §708.02, Section VIII which sets out the prerequisites for a grantable petition for Accelerated Examination under 37 C.F.R. §1.102(d) states in relevant part:

A new application (one which has not received any examination by the examiner) may be granted special status provided that applicant (and this term includes applicant's attorney or agent) complies with each of the following items:

(a) Submits a petition to make special accompanied by the fee set forth in 37 CFR 1.17(h);

(b) Presents all claims directed to a single invention, or if the Office determines that all the claims presented are not obviously directed to a single invention, will make an election without traverse as a prerequisite to the grant of special status;

(c) Submits a statement(s) that a pre-examination search was made, listing the field of search by class and subclass, publication, Chemical Abstracts, foreign patents, etc. The pre-examination search must be directed to the invention as claimed in the application for which special status is requested. A search made by a foreign patent office satisfies this requirement;

(d) Submits one copy each of the references deemed most closely related to the subject matter encompassed by the claims if said references are not already of record; and

(e) Submits a detailed discussion of the references, which discussion points out, with the particularity required by 37 CFR 1.111 (b) and (c), how the claimed subject matter is patentable over the references.

Petition to Make Special **GRANTED** since all of the requirements for special status under MPEP § 708.02(VIII) have been met.

The application file is being forwarded to the Examiner for accelerated examination in accordance with M.P.E.P. §708.02, Section VIII. If the application is subsequently allowed, it will be given priority for printing. See M.P.E.P. §1309.

Brian L. Johnson
Quality Assurance Specialist
Technology Center 2100
Computer Architecture, Software and Information Security
571-272-3595

UNITED STATES PATENT AND TRADEMARK OFFICE

COMMISSIONER FOR PATENTS
UNITED STATES PATENT AND TRADEMARK OFFICE
P.O. BOX 1450
ALEXANDRIA, VA 22313-1450
www.uspto.gov
dlw 04-04

BLAKELY SOKOLOFF TAYLOR & ZAFMAN
12400 WILSHIRE BOULEVARD, SEVENTH FLOOR
LOS ANGELES CA 90025

COPY MAILED

APR 02 2004

OFFICE OF PETITIONS

In re Application of	:
Jeong-Ho Bang	: DECISION DISMISSING
Application No. 10/736,651	: PETITION AS MOOT
Filed: 15 December, 2003	:
Attorney Dkt No. 51876P430	:

This is a decision on the petition, filed under 37 CFR 1.10(c) on 26 January, 2004, requesting that the above-identified application be accorded a filing date of 15 December, 2003.

A review of the Office PALM records reveals that this application was previously accorded a filing date of 15 December, 2003.

As the application has been accorded a filing date of 15 December, 2003, the present petition is unnecessary and will be dismissed as involving a moot issue.

A replacement Filing Receipt is enclosed for petitioner's convenience.

No petition fee is due and none has been charged.

The application is being forwarded to Technology Center 2800 for examination in due course.

Telephone inquiries specific to this matter should be directed to the undersigned at (703) 308-6918.

DWood

Douglas I. Wood
Senior Petitions Attorney
Office of Petitions

cf: Filing Receipt

UNITED STATES PATENT AND TRADEMARK OFFICE

UNITED STATES DEPARTMENT OF COMMERCE
United States Patent and Trademark Office
Address: COMMISSIONER FOR PATENTS
P.O. Box 1450
Alexandria, Virginia 22313-1450
www.uspto.gov

Schwabe Williamson & Wyatt
PACWEST CENTER, SUITE 1900
1211 SW FIFTH AVENUE
PORTLAND, OR 97204

Mail Date: 04/21/2010

Applicant	: Alex A. Lopez-Estrada	: DECISION ON REQUEST FOR
Patent Number	: 7580905	: RECALCULATION of PATENT
Issue Date	: 08/25/2009	: TERM ADJUSTMENT IN VIEW
Appliction No	: 10/736,657	: OF WYETH AND NOTICE OF INTENT TO
Filed	: 12/15/2003	: ISSUE CERTIFICATE OF CORRECTION
		:

The Request for Recalculation is **GRANTED** to the extent indicated.

The patent term adjustment has been determined to be **448** days. The USPTO will *sua sponte* issue a certificate of correction reflecting the amount of PTA days determined by the recalculation.

Prior to the issuance of the certificate of correction, the USPTO will afford patentee an opportunity to be heard and request reconsideration. Accordingly, patentee has **one month or thirty (30) days**, whichever is longer, to file a request for reconsideration of this patent term adjustment calculation. See 35 U.S.C. 154(b)(3)(B)(ii) and 37 CFR 1.322(a)(4). No extensions of time will be granted under 37 CFR 1.136.

Patentee should use document code PET.OP if electronically filing a request for reconsideration of this patent term adjustment calculation. The patentee must also include the information required by 37 CFR 1.705(b)(2) and the fee required by 37 CFR 1.18(e). If patentee does not file a timely request for reconsideration of this patent term adjustment calculation including the information required by 37 CFR 1.705(b)(2) and the fee required by 37 CFR 1.18(e), the USPTO will issue a certificate of correction reflecting the PTA determination noted above.

Patentee should be aware that in order to preserve the right to review in the United States District Court for the District of Columbia of the USPTO patent term adjustment determination, patentee must ensure that he or she also take the steps required under 35 U.S.C. 154(b)(4)(A) in a timely manner. Nothing in the request for recalculation should be construed as providing an alternative time frame for commencing a civil action under 35 U.S.C. 154(b)(4)(A).

Any questions concerning this decision should be directed to the Office of Patent Legal Administration at 571-272-7702.

UNITED STATES PATENT AND TRADEMARK OFFICE

Commissioner for Patents
United States Patent and Trademark Office
P.O. Box 1450
Alexandria, VA 22313-1450
www.uspto.gov

Victor Corvalan
23047 Cricket Hill Road
Cupertino, CA 95014

COPY MAILED

MAY 09 2008

In re Application of

Victor Corvalan

Application No. 10/736,667

Filed: December 17, 2007

Attorney Docket No.

DECISION ON PETITION

This is a decision on the petition to withdraw the holding of abandonment under 37 CFR 1.181(a), filed April 4, 2008.

The petition is **granted**.

This application was held abandoned August 17, 2007, after no reply was received to the Notice of Non-Compliant Amendment mailed August 14, 2007, and again on August 21, 2007. The period for reply remained as set forth in the final office action mailed May 16, 2007. Extensions of the time set for reply under 37 CFR 1.136(a) were available. No response was received within the allowable period and the application became abandoned on August 17, 2007. A Notice of Abandonment was mailed March 13, 2008. The instant petition was filed on April 4, 2008. Petitioner maintains that the notice of August 14, 2007, was never received.

Section 711.03(c)(II) of the *Manual of Patent Examining Procedure* ("MPEP") provides that in order to establish non-receipt of an Office action so as prove that the imposition of a holding of abandonment is improper, petitioner must: 1) provide a statement to the Office indicating that the Office action was not received by petitioner; 2) include in the statement an attestation to the fact that a review of the file jacket and docket records maintained by petitioner indicates that the Office action was not received; and 3) provide a copy of the docket record where the non-received Office communication would have been entered had it been received and docketed.

It is noted that petitioner has not provided a copy of the docket record where the non-received Office action would have been entered had it been received. It is further noted that petitioner is a *pro se* applicant; the burden of proof as to the docket records imposed by Section 711.03(c)(II) cited above is deemed onerous for the *pro se* applicant. Accordingly, Petitioner's statement as to the non-receipt of Office action is, therefore, presumed true. Petitioner is cautioned that Petitioner must inform the Office immediately if, upon further investigation, the representation made to the Office relative to the non-receipt is determined to be factually untrue.

Petitioner has otherwise met the burden of proof as established by Section 711.03(c)(II) of the MPEP. The holding of abandonment is, therefore, withdrawn.

The application file is being forwarded to Technology Center 3600, GAU 3682 for further processing.

Questions concerning this decision should be directed to the undersigned at (571) 272-3222.

Kenya A. McLaughlin
Petitions Attorney
Office of Petitions

UNITED STATES PATENT AND TRADEMARK OFFICE

Commissioner for Patents
United States Patent and Trademark Office
P.O. Box 1450
Alexandria, VA 22313-1450
www.uspto.gov

Marshall, Gerstein & Borun, LLP
233 South Wacker Drive
6300 Sears Tower
Chicago, IL 60606-6357

MAILED

AUG 11 2009

OFFICE OF PETITIONS

In re Application of :
Murthi Nanja :
Application No. 10/736,728 : ON PETITION
Filed: December 16, 2003 :
Attorney Docket No. 30320/17593 :

This is a decision on the petition under the unintentional provisions of 37 CFR 1.137(b), filed May 22, 2009, to revive the above-identified application.

The petition is **GRANTED**.

The application became abandoned for failure to timely file a proper reply within the meaning of 37 CFR 1.113 to the final Office action of December 28, 2007. The proposed reply required for consideration of a petition to revive must be a Notice of Appeal (and appeal fee required by 37 CFR 41.20(b)(2), an amendment that *prima facie* places the application in condition for allowance, a Request for Continued Examination and submission (37 CFR 1.114), or the filing of a continuing application under 37 CFR 1.53(b). See MPEP 711.03(c)(II)(A)(2). A two month extension of time was obtained. Accordingly, the date of abandonment of this application is May 29, 2008. A Notice of Abandonment was mailed on December 10, 2008. A reply was received on May 28, 2008, but was not proper since the reply did put the application in condition for allowance.

The petition satisfies the requirements of 37 CFR 1.137(b) in that petitioner has supplied (1) the reply in the form of a RCE (Request for Continued Examination), with the required fee of $810, (2) the petition fee of $1,620, and (3) a proper statement of unintentional delay. Accordingly, the RCE is accepted as being unintentionally delayed.

Telephone inquiries concerning this decision should be directed to Kimberly Inabinet at (571) 272-4618.

This application is being referred to Technology Center AU 2116 for processing of the RCE and any action that is required by the Examiner in the normal course of business.

Carl Friedman
Petitions Examiner
Office of Petitions

UNITED STATES PATENT AND TRADEMARK OFFICE

UNITED STATES DEPARTMENT OF COMMERCE
United States Patent and Trademark Office
Address: COMMISSIONER FOR PATENTS
P.O. Box 1450
Alexandria, Virginia 22313-1450
www.uspto.gov

Pearl Cohen Zedek Latzer, LLP
1500 Broadway
12th Floor
New York, NY 10036

Mail Date: 06/09/2010

Applicant	: Tal Davidson	: DECISION ON REQUEST FOR
Patent Number	: 7634305	: RECALCULATION of PATENT
Issue Date	: 12/15/2009	: TERM ADJUSTMENT IN VIEW
Application No	: 10/736,738	: OF WYETH AND NOTICE OF INTENT TO
Filed	: 12/17/2003	: ISSUE CERTIFICATE OF CORRECTION
		:

The Request for Recalculation is **GRANTED** to the extent indicated.

The patent term adjustment has been determined to be **1391** days. The USPTO will *sua sponte* issue a certificate of correction reflecting the amount of PTA days determined by the recalculation.

Prior to the issuance of the certificate of correction, the USPTO will afford patentee an opportunity to be heard and request reconsideration. Accordingly, patentee has **one month or thirty (30) days**, whichever is longer, to file a request for reconsideration of this patent term adjustment calculation. See 35 U.S.C. 154(b)(3)(B)(ii) and 37 CFR 1.322(a)(4). No extensions of time will be granted under 37 CFR 1.136.

Patentee should use document code PET.OP if electronically filing a request for reconsideration of this patent term adjustment calculation. The patentee must also include the information required by 37 CFR 1.705(b)(2) and the fee required by 37 CFR 1.18(e). If patentee does not file a timely request for reconsideration of this patent term adjustment calculation including the information required by 37 CFR 1.705(b)(2) and the fee required by 37 CFR 1.18(e), the USPTO will issue a certificate of correction reflecting the PTA determination noted above.

Patentee should be aware that in order to preserve the right to review in the United States District Court for the District of Columbia of the USPTO patent term adjustment determination, patentee must ensure that he or she also take the steps required under 35 U.S.C. 154(b)(4)(A) in a timely manner. Nothing in the request for recalculation should be construed as providing an alternative time frame for commencing a civil action under 35 U.S.C. 154(b)(4)(A).

Any questions concerning this decision should be directed to the Office of Patent Legal Administration at 571-272-7702.

UNITED STATES PATENT AND TRADEMARK OFFICE

Commissioner for Patents
United States Patent and Trademark Office
P.O. Box 1450
Alexandria, VA 22313-1450
www.uspto.gov

FITZPATRICK CELLA HARPER & SCINTO
30 ROCKEFELLER PLAZA
NEW YORK NY 10112-3800

COPY MAILED

SEP 15 2005

OFFICE OF PETITIONS

In re	:	
Shinya Matsui	:	
Application No. 10/736,746	:	DECISION ON APPLICATION
Filed: December 17, 2003	:	FOR PATENT TERM ADJUSTMENT
Patent No. 6,890,069	:	
Issued: May 10, 2005		

This is a decision on the "REQUEST FOR RECONSIDERATION OF PATENT TERM ADJUSTMENT UNDER 37 CFR 1.705(d)", filed June 24, 2005. Patentee requests that the determination of patent term adjustment under 35 U.S.C. 154(b) be corrected from zero (0) days to eighty-four (84) days.

The application for patent term adjustment is **DISMISSED**.

On May 10, 2005, the above-identified application matured into U.S. Patent No. 6,890,069. The patent issued with a Patent Term Adjustment of zero (0) days (84 days of PTO delay reduced by 120 days of applicant delay).

Patentee asserts that he should not have been assessed Applicant delay of one hundred twenty (120) days for the submission of a "Request for Corrected Notice of Allowability" on October 7, 2004, after the mailing of the Notice of Allowance. Patentee states while he included a claim to priority when the application was filed on December 17, 2003, "neither the Notice of Allowance nor any prior communication from the PTO acknowledged receipt of the certified copy." Accordingly, in order to gain acknowledgment of receipt of the certified copy, applicant filed the "Request for Corrected Notice of Allowability". Patentee argues that this submission should not be considered a failure to engage in reasonable efforts to conclude processing or examination of the application.

The argument is not well-taken. Applicant had a prior opportunity to request acknowledgment of the priority claim when on May 24, 2004, he filed a response to a Restriction Requirement mailed on April 22, 2004.[1] A review of the May 24, 2004 response does not indicate that Applicant made the request at that time.

Receipt of the $200.00 fee set forth in 37 C.F.R. § 1.18(e) is acknowledged.

Telephone inquiries specific to this matter should be directed to Cliff Congo, Petitions Attorney, at (571)272-3207.

Karin Ferriter
Senior Legal Advisor
Office of Patent Legal Administration
Office of Deputy Commissioner
for Patent Examination Policy

[1] Made timely by the fact that May 22, 2004 and May 23, 2004 fell on a Saturday and Sunday, respectively. See 37 C.F.R. § 1.7(a).

UNITED STATES PATENT AND TRADEMARK OFFICE

COMMISSIONER FOR PATENTS
UNITED STATES PATENT AND TRADEMARK OFFICE
P.O. BOX 1450
ALEXANDRIA, VA 22313-1450
www.uspto.gov

Paper No.

JONES DAY
222 East 41st Street
New York NY 10017-6702

COPY MAILED

AUG 15 2007

OFFICE OF PETITIONS

In re Application of	:	
Paul Smith et al.	:	
Application No. 10/736,771	:	DECISION ON PETITION
Filed: December 17, 2003	:	UNDER 37 CFR 1.78(a)(3) and
Attorney Docket No. 121939-40307284	:	1.78(a)(6)
Title: MELT-PROCESSIBLE POLY(TETRAFLUOROETHYLENE)	:	

This is a decision on the petition under 37 C.F.R. §§ 1.78(a)(3) and (a)(6), filed May 25, 2007, to accept an unintentionally delayed claim under 35 U.S.C. § 120 for the benefit of priority to prior-filed nonprovisional applications 09/369,319 and 09/505,279, as well as the unintentionally delayed claim under 35 U.S.C. § 119(e) for the benefit of priority to provisional application 60/095,583, set forth in the amendment filed with this petition.

The petition is **GRANTED**.

A petition for acceptance of a claim for late priority under 37 C.F.R. § 1.78(a)(3) is only applicable to those applications filed on or after November 29, 2000. Further, the petition is appropriate only after the expiration of the period specified in 37 C.F.R. § 1.78(a)(2)(ii). In addition, the petition under 37 C.F.R. § 1.78(a)(3) must be accompanied by:

(1) the reference required by 35 U.S.C. §§ 120 and and 119(e) and 37 CFR §§ 1.78(a)(2)(i) and 1.78(a)(5)(ii) of the prior-filed applications, unless previously submitted;
(2) the surcharge set forth in 37 C.F.R. § 1.17(t); and
(3) a statement that the entire delay between the date the claim was due under 37 C.F.R. §§ 1.78(a)(2)(ii) and 1.78(a)(5)(ii) and the date the claim was filed was unintentional. The Director may require additional information where there is a question whether the delay was unintentional.

It is noted that the reference to add the above-noted, prior-filed applications on page one following the first sentence of the specification incorporates by reference prior-filed application 09/505,279. This is acceptable because the incorporation by reference to this application was present on filing in the application transmittal letter1. Moreover, for applications filed prior to September 21, 2004, the incorporation by reference statement may appear in the transmittal letter or in the specification. The instant application was filed prior to September 21, 2004, on December 17, 2003. Accordingly, the petition will not be dismissed for improperly incorporating by reference the added benefit claim.

Additionally, this nonprovisional application was pending at the time of filing of the reference to the prior-filed provisional application as required by 37 CFR 1.78(a)(5)(ii). Furthermore, application number 09/369,319, filed on August 6, 1999, was filed within twelve months of the filing date of the prior-filed provisional application, Application No. 60/095,583, filed on August 6, 1998, for which priority is claimed.

---

1 An incorporation by reference statement added after an application's filing date is not effective because no new matter can be added to an application after its filing date (*see* 35 U.S.C. § 132(a)). If an incorporation by reference statement is included in an amendment to the specification to add a benefit claim under 35 U.S.C. § 120 after the filing date of the application, the amendment would not be proper. When a benefit claim under 35 U.S.C. § 120 is submitted after the filing of an application, the reference to the prior application cannot include an incorporation by reference statement of the prior application. *See* Dart Industries v. Banner, 636 F.2d 684, 207 USPQ 273 (C.A.D.C. 1980). *Note* MPEP §§ 201.06(c) and 608.04(b).

All the above requirements having been satisfied, the late claim for priority under 35 U.S.C. §§ 120 and 119(e) is accepted as being unintentionally delayed.

The granting of the petition to accept the delayed benefit claim to the prior-filed applications under 37 CFR §§ 1.78(a)(3) and 1.78(a)(6) should not be construed as meaning that this application is entitled to the benefit of the filing date of the prior-filed applications. In order for this application to be entitled to the benefit of the prior-filed applications, all other requirements under 35 U.S.C. §§120 and 1.78(a)(1) and (a)(2) and under 35 U.S.C. §119(e) and 37 CFR 1.78(a)(4) and (a)(5) must be met. Similarly, the fact that the corrected Filing Receipt accompanying this decision on petition includes the prior-filed applications should not be construed as meaning that applicant is entitled to the claim for benefit of priority to the prior-filed applications noted thereon. Accordingly, the examiner will, in due course, consider this benefit claim and determine whether the application is entitled to the benefit of the earlier filing date.

A corrected Filing Receipt, which includes the priority claim to the prior-filed applications, accompanies this decision on petition.

It is noted that the address listed on the petition differs from the address of record. The application file does not indicate a change of correspondence address has been filed in this case, although the address given on the petition differs from the address of record. If Petitioner desires to receive future correspondence regarding this application, the change of correspondence address must be submitted.

A courtesy copy of this decision will be mailed to Petitioner. However, all future correspondence will be directed to the address of record until such time as appropriate instructions are received to the contrary. Petitioner will not receive future correspondence related to this application unless Change of Correspondence Address, Patent Form (PTO/SB/122) is submitted for the above-identified application.

For Petitioner's convenience, a blank Change of Correspondence Address, Patent Form (PTO/SB/122), may be found at http://www.uspto.gov/web/forms/sb0122.pdf.

Telephone inquiries regarding *this decision* should be directed to Senior Attorney Paul Shanoski at (571) 272-3225[2]. All other inquiries concerning examination procedures or status of the application should be directed to the Technology Center.

This application is being forwarded to Technology Center Art Unit 1713 for appropriate action on the amendment submitted May 25, 2007, including consideration by the examiner of the claim under 35 U.S.C. § §120 and 119(e) of the prior-filed nonprovisional and provisional applications.

Nancy Johnson
Senior Petitions Attorney
Office of Petitions

cc: John E. Mauk
Intellectual Property Group
51 Louisiana Avenue, N.W.
Washington, D.C. 20001

2 Petitioner will note that all practice before the Office should be in writing, and the action of the Office will be based exclusively on the written record in the Office. See 37 C.F.R. §1.2. As such, Petitioner is reminded that no telephone discussion may be controlling or considered authority for Petitioner's further action(s).

UNITED STATES PATENT AND TRADEMARK OFFICE

UNITED STATES DEPARTMENT OF COMMERCE
United States Patent and Trademark Office
Address: COMMISSIONER FOR PATENTS
P.O. Box 1450
Alexandria, Virginia 22313-1450
www.uspto.gov

APPL NO.	FILING OR 371(c) DATE	ART UNIT	FIL FEE REC'D	ATTY.DOCKET NO	TOT CLMS	IND CLMS
10/736,771	12/17/2003	1713	1413	121939-40307284	67	4

CONFIRMATION NO. 4692

CORRECTED FILING RECEIPT

20582
JONES DAY
222 East 41st Street
New York, NY 10017-6702

OC000000025388840

Date Mailed: 08/15/2007

Receipt is acknowledged of this nonprovisional patent application. The application will be taken up for examination in due course. Applicant will be notified as to the results of the examination. Any correspondence concerning the application must include the following identification information: the U.S. APPLICATION NUMBER, FILING DATE, NAME OF APPLICANT, and TITLE OF INVENTION. Fees transmitted by check or draft are subject to collection. Please verify the accuracy of the data presented on this receipt. **If an error is noted on this Filing Receipt, please write to the Office of Initial Patent Examination's Filing Receipt Corrections. Please provide a copy of this Filing Receipt with the changes noted thereon. If you received a "Notice to File Missing Parts" for this application, please submit any corrections to this Filing Receipt with your reply to the Notice. When the USPTO processes the reply to the Notice, the USPTO will generate another Filing Receipt incorporating the requested corrections (if appropriate).**

Applicant(s)

Paul Smith, Zurich, SWITZERLAND;
Jeroen F. Visjager, Zurich, SWITZERLAND;
Cees Bastiaansen, Maastricht, NETHERLANDS;
Theodorus Tervoort, Zurich, SWITZERLAND;

Power of Attorney: None

Domestic Priority data as claimed by applicant

This application is a CON of 09/505,279 02/16/2000 PAT 6,737,165
which is a CIP of 09/369,319 08/06/1999 PAT 6,531,559
which claims benefit of 60/095,583 08/06/1998

Foreign Applications

If Required, Foreign Filing License Granted: 03/24/2004

The country code and number of your priority application, to be used for filing abroad under the Paris Convention, is US10/736,771

Projected Publication Date: Not Applicable

Non-Publication Request: No

Early Publication Request: No

Title

MELT-PROCESSIBLE POLY(TETRAFLUOROETHYLENE)

Preliminary Class

428

PROTECTING YOUR INVENTION OUTSIDE THE UNITED STATES

Since the rights granted by a U.S. patent extend only throughout the territory of the United States and have no effect in a foreign country, an inventor who wishes patent protection in another country must apply for a patent in a specific country or in regional patent offices. Applicants may wish to consider the filing of an international application under the Patent Cooperation Treaty (PCT). An international (PCT) application generally has the same effect as a regular national patent application in each PCT-member country. The PCT process **simplifies** the filing of patent applications on the same invention in member countries, but **does not result** in a grant of "an international patent" and does not eliminate the need of applicants to file additional documents and fees in countries where patent protection is desired.

Almost every country has its own patent law, and a person desiring a patent in a particular country must make an application for patent in that country in accordance with its particular laws. Since the laws of many countries differ in various respects from the patent law of the United States, applicants are advised to seek guidance from specific foreign countries to ensure that patent rights are not lost prematurely.

Applicants also are advised that in the case of inventions made in the United States, the Director of the USPTO must issue a license before applicants can apply for a patent in a foreign country. The filing of a U.S. patent application serves as a request for a foreign filing license. The application's filing receipt contains further information and guidance as to the status of applicant's license for foreign filing.

Applicants may wish to consult the USPTO booklet, "General Information Concerning Patents" (specifically, the section entitled "Treaties and Foreign Patents") for more information on timeframes and deadlines for filing foreign patent applications. The guide is available either by contacting the USPTO Contact Center at 800-786-9199, or it can be viewed on the USPTO website at http://www.uspto.gov/web/offices/pac/doc/general/index.html.

For information on preventing theft of your intellectual property (patents, trademarks and copyrights), you may wish to consult the U.S. Government website, http://www.stopfakes.gov. Part of a Department of Commerce initiative, this website includes self-help "toolkits" giving innovators guidance on how to protect intellectual property in specific countries such as China, Korea and Mexico. For questions regarding patent enforcement issues, applicants may call the U.S. Government hotline at 1-866-999-HALT (1-866-999-4158).

LICENSE FOR FOREIGN FILING UNDER
Title 35, United States Code, Section 184
Title 37, Code of Federal Regulations, 5.11 & 5.15

GRANTED

The applicant has been granted a license under 35 U.S.C. 184, if the phrase "IF REQUIRED, FOREIGN FILING LICENSE GRANTED" followed by a date appears on this form. Such licenses are issued in all applications where the conditions for issuance of a license have been met, regardless of whether or not a license may be required as set forth in 37 CFR 5.15. The scope and limitations of this license are set forth in 37 CFR 5.15(a) unless an earlier license has been issued under 37 CFR 5.15(b). The license is subject to revocation upon written notification. The

date indicated is the effective date of the license, unless an earlier license of similar scope has been granted under 37 CFR 5.13 or 5.14.

This license is to be retained by the licensee and may be used at any time on or after the effective date thereof unless it is revoked. This license is automatically transferred to any related applications(s) filed under 37 CFR 1.53(d). This license is not retroactive.

The grant of a license does not in any way lessen the responsibility of a licensee for the security of the subject matter as imposed by any Government contract or the provisions of existing laws relating to espionage and the national security or the export of technical data. Licensees should apprise themselves of current regulations especially with respect to certain countries, of other agencies, particularly the Office of Defense Trade Controls, Department of State (with respect to Arms, Munitions and Implements of War (22 CFR 121-128)); the Bureau of Industry and Security, Department of Commerce (15 CFR parts 730-774); the Office of Foreign Assets Control, Department of Treasury (31 CFR Parts 500+) and the Department of Energy.

NOT GRANTED

No license under 35 U.S.C. 184 has been granted at this time, if the phrase "IF REQUIRED, FOREIGN FILING LICENSE GRANTED" DOES NOT appear on this form. Applicant may still petition for a license under 37 CFR 5.12, if a license is desired before the expiration of 6 months from the filing date of the application. If 6 months has lapsed from the filing date of this application and the licensee has not received any indication of a secrecy order under 35 U.S.C. 181, the licensee may foreign file the application pursuant to 37 CFR 5.15(b).

UNITED STATES PATENT AND TRADEMARK OFFICE

Commissioner for Patents
United States Patent and Trademark Office
P.O. Box 1450
Alexandria, VA 22313-1450
www.uspto.gov
DIW 03-05

MORRISON & FOERSTER LLP
1650 TYSONS BOULEVARD
SUITE 300
MCLEAN VA 22102

COPY MAILED

MAR 0 3 2005

OFFICE OF PETITIONS

In re Application of	:	
Maslov et al.	:	
Application No. 10/736,791	:	DECISION GRANTING PETITION
Filed: 17 December, 2003	:	
Attorney Docket No. 544092000123	:	

This is a decision on the petition, filed on 19 November, 2004, under 37 CFR 1.137(f) which is treated as a petition to revive the above-identified nonprovisional application under the unintentional provisions of 37 CFR 1.137(b).

The petition is **GRANTED**.

Petitioner states that the present nonprovisional application is the subject of a foreign or international application filed on 6 February, 2004. However, the U.S. Patent and Trademark Office was unintentionally not notified of this filing within 45 days subsequent to the filing of the subject application in a foreign country.

In view of the above, this application became abandoned pursuant to 35 U.S.C. § 122(b)(2)(B)(iii) and 37 CFR 1.213(c) for failure to timely notify the Office of the filing of an application in a foreign country, or under a multilateral international agreement, that requires publication of applications 18 months after filing.

A petition under 37 CFR 1.137(f) must be accompanied by:

> (1) the reply which is met by the notification of such filing in a foreign country or under a multinational treaty;

(2) the petition fee as set forth in 37 CFR 1.17(m); and
(3) a statement that the entire delay in filing the required reply from the due date of the reply until the filing of a grantable petition was unintentional.

The present petition has been found to be in compliance with 37 CFR 1.137(f). Accordingly, the failure to timely notify the Office of a foreign or international filing within 45 days after the date of filing of such foreign or international application as provided by 35 U.S.C. § 122(b)(2)(B)(i) has been rescinded. It is noted that petitioner filed a Request to Rescind the Nonpublication Request on 19 November, 2004. A Communication Regarding Rescission of Nonpublication Request and/or Notice of Foreign Filing, showing a projected publication date of 3 March, 2005, was mailed on 24 November, 2004.

This application is being referred to Technology Center Art Unit 2837 for examination in due course.

Any inquiries concerning this decision may be directed to the undersigned at 571.272.3231.

D Wood

Douglas I. Wood
Senior Petitions Attorney
Office of Petitions

UNITED STATES PATENT AND TRADEMARK OFFICE

Commissioner for Patents
United States Patent and Trademark Office
P.O. Box 1450
Alexandria, VA 22313-1450
www.uspto.gov

MORRISON & FOERSTER
1650 TYSONS BOULEVARD
SUITE 300
MCLEAN, VA 22102

COPY MAILED

MAY 26 2006

OFFICE OF PETITIONS

In re Application of
Boris A. Maslov et al
Application No. 10/736,791
Filed: December 17, 2003
Attorney Docket No. 544092000123

DECISION ON PETITION
TO WITHDRAW
FROM RECORD

This is a decision on the Request to Withdraw as attorney or agent of record under 37 C.F.R. § 1.36(b), filed September 28, 2005.

The petition is **NOT APPROVED** as moot.

A review of the file record indicates that the previously appointed power of attorney has been revoked by the assignee. Accordingly, the request to withdraw under 37 C.F.R. § 1.36(b) is moot.

All future communications from the Office will continue to be directed to the below-listed address until otherwise notified by applicants.

This application is being referred to Technology Center AU 2837 to await a reply to the final Office action mailed May 3, 2006.

Telephone inquires concerning this decision should be directed to Wan Laymon at 571-272-3220.

Denise Pothier
Petitions Examiner
Office of Petitions

cc: HELLER EHRMAN
1717 RHODE ISLAND AVENUE, N.W.
WASHINGTON, DC 20036

UNITED STATES PATENT AND TRADEMARK OFFICE

Commissioner for Patents
United States Patent and Trademark Office
P.O. Box 1450
Alexandria, VA 22313-1450
www.uspto.gov

MORRISON & FOERSTER LLP
1650 TYSONS BOULEVARD
SUITE 300
MCLEAN VA 22102

COPY MAILED

FEB 11 2005

OFFICE OF PETITIONS

In re Application of :
Boris A. Maslov :
Application No. 10/736,792 : DECISION GRANTING PETITION
Filed: December 17, 2003 :
Attorney Docket No. 544092000121 :

This is a decision on the petition, filed November 19, 2004, under 37 CFR 1.137(f) which is treated as a petition to revive the above-identified nonprovisional application under the unintentional provisions of 37 CFR 1.137(b).

The petition is **GRANTED**.

Petitioner states that the present nonprovisional application is the subject of a foreign or international application filed on February 6, 2004. However, the U.S. Patent and Trademark Office was unintentionally not notified of this filing within 45 days subsequent to the filing of the subject application in a foreign country.

In view of the above, this application became abandoned pursuant to 35 U.S.C. § 122(b)(2)(B)(iii) and 37 CFR 1.213(c) for failure to timely notify the Office of the filing of an application in a foreign country, or under a multilateral international agreement, that requires publication of applications 18 months after filing.

A petition under 37 CFR 1.137(f) must be accompanied by:

(1) the reply which is met by the notification of such filing in a foreign country or under a multinational treaty;

(2) the petition fee as set forth in 37 CFR 1.17(m); and

(3) a statement that the entire delay in filing the required reply from the due date of the reply until the filing of a grantable petition was unintentional.

The present petition has been found to be in compliance with 37 CFR 1.137(f). Accordingly, the failure to timely notify the Office of a foreign or international filing within

45 days after the date of filing of such foreign or international application as provided by 35 U.S.C. § 122(b)(2)(B)(I) has been rescinded. A publication date will be communicated to the applicants in due course.

This matter is referred to the Office of Initial Patent Examination and then to Technology Center 2834 for examination in due course.

Telephone inquiries related to this decision should be directed to the undersigned Petitions Attorney at (571) 272-3212.

Patricia Faison-Ball
Senior Petitions Attorney
Office of Petitions

UNITED STATES PATENT AND TRADEMARK OFFICE

Commissioner for Patents
United States Patent and Trademark Office
P.O. Box 1450
Alexandria, VA 22313-1450
www.uspto.gov

MORRISON & FOERSTER LLP
1650 TYSONS BOULEVARD
SUITE 300
MCLEAN VA 22102

COPY MAILED

FEB 11 2005

OFFICE OF PETITIONS

In re Application of :
Boris A. Maslov :
Application No. 10/736,792 : DECISION GRANTING PETITION
Filed: December 17, 2003 :
Attorney Docket No. 544092000121 :

This is a decision on the petition filed December 3, 2004, under 37 CFR 1.53, in response to the Notice of Incomplete Nonprovisional Application mailed October 4, 2004, requesting that the above identified application be accorded a filing date of December 17, 2003.

The "Notice of Incomplete Nonprovisional Application" mailed October 4, 2004 by the Office of Initial Patent Examination, indicated that the application had not been accorded a filing date because the application was deposited without drawings and that the filing date of the application would be the date of receipt of the drawings.

In response, the present petition, and 8 sheets of drawings were filed. Petitioners argue that 8 sheets of drawings were filed with the other application papers on December 13, 2003. In support of the petition, a copy of petitioner's postcard receipt which shows an official USPTO date-stamp of December 13, 2003, and the above-identified application number, and acknowledges receipt of, *inter alia*, 8 sheets of drawings, was supplied with the present petition. Petitioner requests that the application, including 8 sheets of drawings, be accorded a filing date of December 13, 2003.

Upon review of the record, no sheets of drawings deposited on December 13, 2003, have been located among the application papers. However, the evidence is convincing that the application papers deposited on December 13, 2003, included 8 sheets of drawings, which were subsequently misplaced in the USPTO. Therefore, the application, including the 8 sheets of drawings, was complete on filing and entitled to a filing date of December 13, 2003.

In view of the above, the petition is **GRANTED**.

The Notice of Incomplete Nonprovisional Application mailed October 4, 2004, is

withdrawn. Therefore, the petition fee in the amount of $400.00 will be credited back to deposit account no. 03-1952.

This matter is being referred to the Office of Initial Patent Examination for processing with a filing date of December 17, 2003, using the application papers filed on December 17, 2003 and the 8 sheets of drawings supplied on December 3, 2004.

Telephone inquiries related to this decision should be directed to the undersigned Petitions Attorney at (571) 272-3212.

Patricia Faison-Ball
Senior Petitions Attorney
Office of Petitions

UNITED STATES PATENT AND TRADEMARK OFFICE

Commissioner for Patents
United States Patent and Trademark Office
P.O. Box 1450
Alexandria, VA 22313-1450
www.uspto.gov

PETER G. DILWORTH, ESQ.
DILWORTH & BARRESE, LLP
333 EARLE OVINGTON BOULEVARD
UNIONDALE, NY 11553

COPY MAILED

MAR 2 5 2005

OFFICE OF PETITIONS

In re Application of :
Todd M. Boyce, et al. :
Application No. 10/736,799 : ON PETITION
Filed: December 16, 2003 :
Attorney Docket No. 285-83 CON CIP III :

This is a decision on the petition under 37 CFR 1.137(b), filed December 30, 2004, to revive the above-identified application.

The petition is **GRANTED.**

The above-identified application became abandoned for failure to reply in a timely manner to the Notice To File Missing Parts of Nonprovisional Application mailed March 24, 2004. The Notice set a period for reply of two (2) months from the mail date of the Notice. No extensions of time under the provisions of 37 CFR 1.136(a) was obtained. Accordingly, the above-identified application became abandoned on May 25, 2004.

Telephone inquiries concerning this decision should be directed to the undersigned at (571) 272-3229.

The application matter is being forwarded to the Office of Initial Patent Examination for further processing.

Retta Williams

Retta Williams
Petitions Examiner
Office of Petitions
Office of the Deputy Commissioner
for Patent Examination Policy

UNITED STATES PATENT AND TRADEMARK OFFICE

UNITED STATES DEPARTMENT OF COMMERCE
United States Patent and Trademark Office
Address: COMMISSIONER FOR PATENTS
P.O. Box 1450
Alexandria, Virginia 22313-1450
www.uspto.gov

IBM CORPORATION, T.J. WATSON RESEARCH CENTER
P.O. BOX 218
YORKTOWN HEIGHTS, NY 10598

Mail Date: 04/20/2010

Applicant	: Steven J. Mastrianni	: DECISION ON REQUEST FOR
Patent Number	: 7584266	: RECALCULATION of PATENT
Issue Date	: 09/01/2009	: TERM ADJUSTMENT IN VIEW
Appliction No	: 10/736,802	: OF WYETH AND NOTICE OF INTENT TO
Filed	: 12/16/2003	: ISSUE CERTIFICATE OF CORRECTION
		:

The Request for Recalculation is **GRANTED** to the extent indicated.

The patent term adjustment has been determined to be **1423** days. The USPTO will *sua sponte* issue a certificate of correction reflecting the amount of PTA days determined by the recalculation.

Prior to the issuance of the certificate of correction, the USPTO will afford patentee an opportunity to be heard and request reconsideration. Accordingly, patentee has **one month or thirty (30) days**, whichever is longer, to file a request for reconsideration of this patent term adjustment calculation. See 35 U.S.C. 154(b)(3)(B)(ii) and 37 CFR 1.322(a)(4). No extensions of time will be granted under 37 CFR 1.136.

Patentee should use document code PET.OP if electronically filing a request for reconsideration of this patent term adjustment calculation. The patentee must also include the information required by 37 CFR 1.705(b)(2) and the fee required by 37 CFR 1.18(e). If patentee does not file a timely request for reconsideration of this patent term adjustment calculation including the information required by 37 CFR 1.705(b)(2) and the fee required by 37 CFR 1.18(e), the USPTO will issue a certificate of correction reflecting the PTA determination noted above.

Patentee should be aware that in order to preserve the right to review in the United States District Court for the District of Columbia of the USPTO patent term adjustment determination, patentee must ensure that he or she also take the steps required under 35 U.S.C. 154(b)(4)(A) in a timely manner. Nothing in the request for recalculation should be construed as providing an alternative time frame for commencing a civil action under 35 U.S.C. 154(b)(4)(A).

Any questions concerning this decision should be directed to the Office of Patent Legal Administration at 571-272-7702.

UNITED STATES PATENT AND TRADEMARK OFFICE

UNITED STATES DEPARTMENT OF COMMERCE
United States Patent and Trademark Office
Address: COMMISSIONER FOR PATENTS
P.O. Box 1450
Alexandria, Virginia 22313-1450
www.uspto.gov

COATS & BENNETT/SONY ERICSSON
1400 CRESCENT GREEN
SUITE 300
CARY, NC 27518

Mail Date: 04/21/2010

Applicant	: Gerald P. Michalak	: DECISION ON REQUEST FOR
Patent Number	: 7603148	: RECALCULATION of PATENT
Issue Date	: 10/13/2009	: TERM ADJUSTMENT IN VIEW
Appliction No	: 10/736,814	: OF WYETH AND NOTICE OF INTENT TO
Filed	: 12/16/2003	: ISSUE CERTIFICATE OF CORRECTION
		:

The Request for Recalculation is **GRANTED** to the extent indicated.

The patent term adjustment has been determined to be **1488** days. The USPTO will *sua sponte* issue a certificate of correction reflecting the amount of PTA days determined by the recalculation.

Prior to the issuance of the certificate of correction, the USPTO will afford patentee an opportunity to be heard and request reconsideration. Accordingly, patentee has **one month or thirty (30) days**, whichever is longer, to file a request for reconsideration of this patent term adjustment calculation. See 35 U.S.C. 154(b)(3)(B)(ii) and 37 CFR 1.322(a)(4). No extensions of time will be granted under 37 CFR 1.136.

Patentee should use document code PET.OP if electronically filing a request for reconsideration of this patent term adjustment calculation. The patentee must also include the information required by 37 CFR 1.705(b)(2) and the fee required by 37 CFR 1.18(e). If patentee does not file a timely request for reconsideration of this patent term adjustment calculation including the information required by 37 CFR 1.705(b)(2) and the fee required by 37 CFR 1.18(e), the USPTO will issue a certificate of correction reflecting the PTA determination noted above.

Patentee should be aware that in order to preserve the right to review in the United States District Court for the District of Columbia of the USPTO patent term adjustment determination, patentee must ensure that he or she also take the steps required under 35 U.S.C. 154(b)(4)(A) in a timely manner. Nothing in the request for recalculation should be construed as providing an alternative time frame for commencing a civil action under 35 U.S.C. 154(b)(4)(A).

Any questions concerning this decision should be directed to the Office of Patent Legal Administration at 571-272-7702.

UNITED STATES PATENT AND TRADEMARK OFFICE

UNITED STATES DEPARTMENT OF COMMERCE
United States Patent and Trademark Office
Address: COMMISSIONER FOR PATENTS
P.O. Box 1450
Alexandria, Virginia 22313-1450
www.uspto.gov

COATS & BENNETT/SONY ERICSSON
1400 CRESCENT GREEN
SUITE 300
CARY, NC 27518

Mail Date: 05/18/2010

Applicant : Gerald P. Michalak
Patent Number : 7603148
Issue Date : 10/13/2009
Application No: 10/736,814
Filed : 12/16/2003

: NOTICE CONCERNING IMPROPER
: CALCULATION OF PATENT TERM
: ADJUSTMENT BASED UPON USPTO
: IMPROPERLY MEASURING REDUCTION
: PERIOD UNDER 37 CFR 1.704(c)(10).

The United States Patent and Trademark Office (USPTO) discovered that in processing the recent recalculation decisions mailed in response to patentee's filed Request for Recalculation of Patent Term Adjustment in view of Wyeth, the USPTO improperly measured the reduction period for reductions under 37 CFR 1.704(c)(10). Pursuant to 37 CFR 1.704(c)(10), patentee's reduction begins on the date of filing the amendment under 37 CFR 1.312 ("1.312 amendment") or other related paper and ends on the date that the Office mails a response to the filing of the 1.312 amendment or other paper. It has been discovered that during the recalculation, the calculation failed to the limit the reduction to the mail date of the response to the 1.312 amendment or other paper. Accordingly, patentee's reductions were greater than warranted.

This notice **VACATES** the previous GRANTED request for recalculation and provides patentee with a revised GRANTED recalculation.

The patent term adjustment has been determined to be **1603** days. The USPTO will *sua sponte* issue a certificate of correction reflecting the amount of patent term adjustment (PTA) days determined by the recalculation.

Prior to the issuance of the certificate of correction, the USPTO will afford patentee an opportunity to be heard and request reconsideration. Accordingly, patentee has **one month or thirty (30) days** from the mail date of this notice, whichever is longer, to file a request for reconsideration of this PTA calculation. See 35 U.S.C. § 154(b)(3)(B)(ii) and 37 CFR 1.322(a)(4).

Patentee should use document code PET.OP if electronically filing a request for reconsideration of this PTA calculation. The patentee must also include the information required by 37 CFR 1.705(b)(2), and the fee required by 37 CFR 1.18(e). If patentee does not file a timely request for reconsideration of this PTA calculation, including the information required by 37 CFR 1.705(b)(2) and the fee required by 37 CFR 1.18(e), the USPTO will issue a certificate of correction reflecting the PTA determination noted above.

Patentee should be aware that in order to preserve the right of review of the USPTO's PTA determination in the United States District Court for the District of Columbia, patentee must ensure that the steps required under 35 U.S.C. § 154 (b)(4) are taken in a timely manner. Nothing in the request for recalculation should be construed as providing an alternative time frame for commencing a civil action under 35 U.S.C. § 154(b)(4).

UNITED STATES PATENT AND TRADEMARK OFFICE

Commissioner for Patents
United States Patent and Trademark Office
P.O. Box 1450
Alexandria, VA 22313-1450
www.uspto.gov

MARTIN & FERRARO
1557 LAKE O'PINES STREET, NE
HARTVILLE OH 44632

COPY MAILED

JUN 13 2005

OFFICE OF PETITIONS

ON PETITION

In re Application of :
Gary K. Michelson :
Application No. 10/736,866 :
Filed: December 16, 2003 :
Attorney Docket No. 101.0089-02000 :

This is a decision on the petition, filed June 10, 2005, under 37 CFR 1.313(c)(2) to withdraw the above-identified application from issue after payment of the issue fee.

The petition is **GRANTED.**

The above-identified application is withdrawn from issue for consideration of a submission under 37 CFR 1.114 (request for continued examination). See 37 CFR 1.313(c)(2).

Petitioner is advised that the issue fee paid on March 3, 2005 in the above-identified application cannot be refunded. If, however, the above-identified application is again allowed, petitioner may request that it be applied towards the issue fee required by the new Notice of Allowance.[1]

Telephone inquiries should be directed to the undersigned at (571) 272-3208.

The examiner of Technology Center AU 3732 will consider the request for continued examination under 37 CFR 1.114.

Karen Creasy

Karen Creasy
Petitions Examiner
Office of Petitions
Office of the Deputy Commissioner
for Patent Examination Policy

---

[1] The request to apply the issue fee to the new Notice may be satisfied by completing and returning the new Issue Fee Transmittal Form PTOL-85(b), which includes the following language thereon: "Commissioner for Patents is requested to apply the Issue Fee and Publication Fee (if any) or re-apply any previously paid issue fee to the application identified above." Petitioner is advised that, whether a fee is indicated as being due or not, the Issue Fee Transmittal Form **must** be completed and timely submitted to avoid abandonment. Note the language in bold text on the first page of the Notice of Allowance and Fee(s) Due (PTOL-85).

UNITED STATES PATENT AND TRADEMARK OFFICE

Commissioner for Patents
United States Patent and Trademark Office
P.O. Box 1450
Alexandria, VA 22313-1450
www.uspto.gov
DIW 07-04

ATTN: MAURICE E. GAUTHIER
SAMUELS, GAUTHIER & STEVENS
SUITE 3300
225 FRANKLIN STREET
BOSTON MA 02110

COPY MAILED

JUL 08 2004

OFFICE OF PETITIONS

In re Application of	:
Frank A. Howell	: DECISION GRANTING
Application No. 10/736,881	: PETITION
Filed: 16 December, 2003	:
Atty Dckt No. 7041(CIP)	:

This is a decision on the petition filed on 2 June, 2004, requesting that the above-identified application, including six (6) sheets of drawings, be accorded a filing date of 16 December, 2003.

The petition is **GRANTED**.

On 16 December, 2003, the application was filed.

On 18 May, 2004, Initial Patent Examination Division mailed a Notice of Incomplete Nonprovisional Application stating that the application had not been accorded a filing date because the application had been deposited without drawings.

In response, on 2 June, 2004, the present petition was filed. Petitioner argues that six (6) sheets of drawings were filed with the other application papers on 16 December, 2003, but were subsequently misplaced in the U.S. Patent and Trademark Office (Office). In support, a copy of petitioners' postcard receipt was supplied with the petition. The postcard receipt shows an Office date stamp of 16 December, 2003, and the above-identified application number, and acknowledges receipt of, *inter alia*, "Pgs: 18 / Spec: 7, Claims: 3 / Drwgs. :6 ..." The postcard also identifies the application by inventor's name, invention title, and docket number.

Upon review of the record, no sheets of drawings deposited on 16 December, 2003, have been located among the application papers. However, the evidence is convincing that the application papers deposited on 16 December, 2003, included six (6) sheets of

drawings, which were subsequently misplaced in the USPTO. Therefore, the application, including six (6) sheets of drawings, was complete on filing and entitled to a filing date of 16 December, 2003.

The application will be processed and examined using the copy of the six (6) sheets of drawings supplied on 2 June, 2004. The duplicate copy of the other application papers filed on 2 June, 2004, will not be used for processing or examination, but will be retained in the application file.

As petitioner has shown that the present petition was due to Office error, the petition fee of $130.00 will be credited to counsel's deposit account, No. 19-0079.

The application is being forwarded to the Office of Initial Patent Examination for further processing with a filing date of 16 December, 2003, using the application papers filed on that date and the six (6) sheets of drawings filed with the present petition, and for an indication in Office records that six (6) sheets of drawings were present on filing.

Telephone inquires should be directed to the undersigned at 703.308.6918.

D Wood

Douglas I. Wood
Senior Petitions Attorney
Office of Petitions

UNITED STATES PATENT AND TRADEMARK OFFICE

Commissioner for Patents
United States Patent and Trademark Office
P.O. Box 1450
Alexandria, VA 22313-1450
www.uspto.gov

Dr. Daniel P. Morris, Esq.
IBM Corporation
Intellectual Property Law Department
P.O. Box 218
Yorktown Heights, NY 10598

COPY MAILED

AUG 0 1 2008

OFFICE OF PETITIONS

In re Application of	:	
Brian Samuel Beaman, et. al.	:	
Application No. 10/736,890	:	DECISION ON PETITION
Filed: December 16, 2003	:	UNDER 37 CFR 1.78(a)(3)
Attorney Docket No. YOR919970349US4	:	

This is a decision on the petition under 37 CFR 1.78(a)(3), filed June 24, 2007 and supplemented on July 31, 2008, to accept an unintentionally delayed claim under 35 U.S.C. § 120 for the benefit of priority to the prior-filed nonprovisional applications set forth in the concurrently filed amendment. This is also a decision on the petition to expedite the handling of the instant claim for priority filed June 24, 2008[1].

The petitions are **GRANTED**.

A petition for acceptance of a claim for late priority under 37 CFR 1.78(a)(3) is only applicable to those applications filed on or after November 29, 2000. Further, the petition is appropriate only after the expiration of the period specified in 37 CFR 1.78(a)(2)(ii). In addition, the petition under 37 CFR 1.78(a)(3) must be accompanied by:

(1) the reference required by 35 U.S.C. § 120 and 37 CFR 1.78(a)(2)(i) of the prior-filed application, unless previously submitted;
(2) the surcharge set forth in § 1.17(t); and
(3) a statement that the entire delay between the date the claim was due under 37 CFR 1.78(a)(2)(ii) and the date the claim was filed was unintentional. The Director may require additional information where there is a question whether the delay was unintentional.

Since all of the above requirements have been satisfied, the late claim for priority under 35 U.S.C. § 120 is accepted as being unintentionally delayed.

[1] The petition to expedite the handling of the claim for priority is properly treated under 37 CFR 1.182 and the petition fee of $400 has been charged to petitioner's deposit account, as authorized.

The granting of the petition to accept the delayed benefit claim to the prior-filed applications under 37 CFR 1.78(a)(3) should not be construed as meaning that this application is entitled to the benefit of the prior-filed applications. In order for this application to be entitled to the benefit of the prior-filed applications, all other requirements under 35 U.S.C. § 120 and 37 CFR 1.78(a)(1) and (a)(2) must be met. Similarly, the fact that the corrected Filing Receipt accompanying this decision on petition includes the prior-filed applications should not be construed as meaning that applicant is entitled to the claim for benefit of priority to the prior-filed applications noted thereon. Accordingly, the examiner will, in due course, consider this benefit claim and determine whether the application is entitled to the benefit of the earlier filing date.

A corrected Filing Receipt, which includes the priority claim to the prior-filed nonprovisional applications, accompanies this decision on petition.

This application is being forwarded to Technology Center Art Unit 2818, for consideration by the examiner of applicant's entitlement to claim benefit of priority under 35 U.S.C. § 120 to the prior-filed applications.

Any inquiries concerning this decision may be directed to the undersigned at (571) 272-3226. All other inquiries concerning either the examination procedures or status of the application should be directed to the Technology Center.

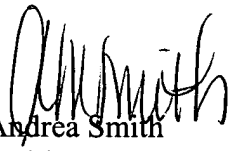

Andrea Smith
Petitions Examiner
Office of Petitions

ATTACHMENT: Corrected Filing Receipt

UNITED STATES PATENT AND TRADEMARK OFFICE

UNITED STATES DEPARTMENT OF COMMERCE
United States Patent and Trademark Office
Address: COMMISSIONER FOR PATENTS
P.O. Box 1450
Alexandria, Virginia 22313-1450
www.uspto.gov

APPLICATION NUMBER	FILING or 371(c) DATE	GRP ART UNIT	FIL FEE REC'D	ATTY.DOCKET.NO	TOT CLAIMS	IND CLAIMS
10/736,890	12/16/2003	2818	1730	YOR919970349US4	31	2

CONFIRMATION NO. 5741

CORRECTED FILING RECEIPT

Dr. Daniel P. Morris, Esq.
IBM Corporation
Intellectual Property Law Department
P.O. Box 218
Yorktown Heights, NY 10598

OC000000031328422

Date Mailed: 08/01/2008

Receipt is acknowledged of this non-provisional patent application. The application will be taken up for examination in due course. Applicant will be notified as to the results of the examination. Any correspondence concerning the application must include the following identification information: the U.S. APPLICATION NUMBER, FILING DATE, NAME OF APPLICANT, and TITLE OF INVENTION. Fees transmitted by check or draft are subject to collection. Please verify the accuracy of the data presented on this receipt. **If an error is noted on this Filing Receipt, please submit a written request for a Filing Receipt Correction. Please provide a copy of this Filing Receipt with the changes noted thereon. If you received a "Notice to File Missing Parts" for this application, please submit any corrections to this Filing Receipt with your reply to the Notice. When the USPTO processes the reply to the Notice, the USPTO will generate another Filing Receipt incorporating the requested corrections**

Applicant(s)

Brian Samuel Beaman, Apex, NC;
Keith Edward Fogel, Mohegan Lake, NY;
Paul Alfred Lauro, Nanuet, NY;
Da-Yuan Shih, Poughkeepsie, NY;

Power of Attorney:
Daniel Morris--32053

Domestic Priority data as claimed by applicant

This application is a DIV of 10/342,167 01/14/2003 PAT 6,708,403
which is a CON of 09/871,536 05/31/2001 PAT 6,526,655
which is a DIV of 09/164,470 10/01/1998 PAT 6,295,729
which claims benefit of 60/060,877 10/02/1997
and is a CIP of 09/088,394 06/01/1998 PAT 6,300,780
which is a DIV of 08/754,869 11/22/1996 PAT 5,821,763
which is a CON of 08/055,485 04/30/1993 PAT 5,635,846
which is a CIP of 07/963,346 10/19/1992 PAT 5,371,654

Foreign Applications

If Required, Foreign Filing License Granted: 03/29/2004
The country code and number of your priority application, to be used for filing abroad under the Paris Convention, is **US 10/736,890**
Projected Publication Date: Not Applicable
Non-Publication Request: No

Early Publication Request: No
Title

Angled flying lead wire bonding process

Preliminary Class

257

PROTECTING YOUR INVENTION OUTSIDE THE UNITED STATES

Since the rights granted by a U.S. patent extend only throughout the territory of the United States and have no effect in a foreign country, an inventor who wishes patent protection in another country must apply for a patent in a specific country or in regional patent offices. Applicants may wish to consider the filing of an international application under the Patent Cooperation Treaty (PCT). An international (PCT) application generally has the same effect as a regular national patent application in each PCT-member country. The PCT process **simplifies** the filing of patent applications on the same invention in member countries, but **does not result** in a grant of "an international patent" and does not eliminate the need of applicants to file additional documents and fees in countries where patent protection is desired.

Almost every country has its own patent law, and a person desiring a patent in a particular country must make an application for patent in that country in accordance with its particular laws. Since the laws of many countries differ in various respects from the patent law of the United States, applicants are advised to seek guidance from specific foreign countries to ensure that patent rights are not lost prematurely.

Applicants also are advised that in the case of inventions made in the United States, the Director of the USPTO must issue a license before applicants can apply for a patent in a foreign country. The filing of a U.S. patent application serves as a request for a foreign filing license. The application's filing receipt contains further information and guidance as to the status of applicant's license for foreign filing.

Applicants may wish to consult the USPTO booklet, "General Information Concerning Patents" (specifically, the section entitled "Treaties and Foreign Patents") for more information on timeframes and deadlines for filing foreign patent applications. The guide is available either by contacting the USPTO Contact Center at 800-786-9199, or it can be viewed on the USPTO website at http://www.uspto.gov/web/offices/pac/doc/general/index.html.

For information on preventing theft of your intellectual property (patents, trademarks and copyrights), you may wish to consult the U.S. Government website, http://www.stopfakes.gov. Part of a Department of Commerce initiative, this website includes self-help "toolkits" giving innovators guidance on how to protect intellectual property in specific countries such as China, Korea and Mexico. For questions regarding patent enforcement issues, applicants may call the U.S. Government hotline at 1-866-999-HALT (1-866-999-4158).

LICENSE FOR FOREIGN FILING UNDER

Title 35, United States Code, Section 184

Title 37, Code of Federal Regulations, 5.11 & 5.15

GRANTED

The applicant has been granted a license under 35 U.S.C. 184, if the phrase "IF REQUIRED, FOREIGN FILING LICENSE GRANTED" followed by a date appears on this form. Such licenses are issued in all applications where

the conditions for issuance of a license have been met, regardless of whether or not a license may be required as set forth in 37 CFR 5.15. The scope and limitations of this license are set forth in 37 CFR 5.15(a) unless an earlier license has been issued under 37 CFR 5.15(b). The license is subject to revocation upon written notification. The date indicated is the effective date of the license, unless an earlier license of similar scope has been granted under 37 CFR 5.13 or 5.14.

This license is to be retained by the licensee and may be used at any time on or after the effective date thereof unless it is revoked. This license is automatically transferred to any related applications(s) filed under 37 CFR 1.53(d). This license is not retroactive.

The grant of a license does not in any way lessen the responsibility of a licensee for the security of the subject matter as imposed by any Government contract or the provisions of existing laws relating to espionage and the national security or the export of technical data. Licensees should apprise themselves of current regulations especially with respect to certain countries, of other agencies, particularly the Office of Defense Trade Controls, Department of State (with respect to Arms, Munitions and Implements of War (22 CFR 121-128)); the Bureau of Industry and Security, Department of Commerce (15 CFR parts 730-774); the Office of Foreign AssetsControl, Department of Treasury (31 CFR Parts 500+) and the Department of Energy.

NOT GRANTED

No license under 35 U.S.C. 184 has been granted at this time, if the phrase "IF REQUIRED, FOREIGN FILING LICENSE GRANTED" DOES NOT appear on this form. Applicant may still petition for a license under 37 CFR 5.12, if a license is desired before the expiration of 6 months from the filing date of the application. If 6 months has lapsed from the filing date of this application and the licensee has not received any indication of a secrecy order under 35 U.S.C. 181, the licensee may foreign file the application pursuant to 37 CFR 5.15(b).

UNITED STATES PATENT AND TRADEMARK OFFICE

Commissioner for Patents
United States Patent and Trademark Office
P.O. Box 1450
Alexandria, VA 22313-1450
www.uspto.gov

MORRISON & FOERSTER LLP
1650 TYSONS BOULEVARD
SUITE 300
MCLEAN, VA 22102

COPY MAILED

JUN 15 2005

OFFICE OF PETITIONS

In re Application of :
Boris A. Maslov, et al. :
Application No. 10/736,896 :
Filed: December 17, 2003 :
Attorney Docket No. 544092000124 :

DECISION ON PETITION
UNDER 37 CFR 1.137(b)

This is a decision on the petition, filed November 19, 2004, which is being treated as a petition under 37 CFR 1.137(b) to revive the instant nonprovisional application for failure to timely notify the U.S. Patent and Trademark (USPTO) of the filing of an application in a foreign country, or under a multinational treaty that requires publication of applications eighteen months after filing. See 37 CFR 1.137(f).

The petition is **GRANTED.**

Petitioner states that the instant nonprovisional application is the subject of an application filed in an eighteen months publication country on February 6, 2004. However, the USPTO was unintentionally not notified of this filing within 45 days subsequent to the filing of the subject application in an eighteen months publication country.

In view of the above, this application became abandoned pursuant to 35 U.S.C. § 122(b)(2)(B)(iii) and 37 CFR 1.213(c) for failure to timely notify the Office of the filing of an application in a foreign country, or under a multilateral international agreement, that requires publication of applications 18 months after filing.

A petition to revive an application abandoned pursuant to 35 U.S.C. 122(b)(2)(B)(iii) for failure to notify the USPTO of a foreign filing must be accompanied by:

(1) the required reply which is met by the notification of such filing in a foreign country or under a multinational treaty;

(2) the petition fee as set forth in 37 CFR 1.17(m); and

(3) a statement that the entire delay in filing the required reply from the due date of the reply until the filing of a grantable petition was unintentional.

The instant petition has been found to be in compliance with 37 CFR 1.137(b). Accordingly, the failure to timely notify the USPTO of a foreign or international filing within 45 days after the date of filing of such foreign or international application as provided by 35 U.S.C. § 122(b)(2)(B)(iii) and 37 CFR 1.213(c) is accepted as having been unintentionally delayed.

The previous Request and Certification under 35 U.S.C. § 122(b)(2)(B)(i) has been previously rescinded.

Telephone inquiries concerning this decision should be directed to the undersigned at (571) 272-3229.

This application matter is being forwarded to Technology Center Art Unit 3618 for examination in due course.

Retta Williams

Retta Williams
Petitions Examiner
Office of Petitions
Office of the Deputy Commissioner
for Patent Examination Policy

UNITED STATES PATENT AND TRADEMARK OFFICE

Commissioner for Patents
United States Patent and Trademark Office
P.O. Box 1450
Alexandria, VA 22313-1450
www.uspto.gov

MORRISON AND FOERSTER LLP
1650 TYSONS BOULEVARD, SUITE 300
MCLEAN, VA 22102

COPY MAILED

MAY 12 2006

OFFICE OF PETITIONS

In re Application of	:	
Maslov et al.	:	DECISION ON PETITION
Application No. 10/736,896	:	TO WITHDRAW
Filed: December 17, 2003	:	FROM RECORD
Attorney Docket No. 544092000124	:	

This is a decision on the Request to Withdraw as attorney or agent of record under 37 C.F.R. § 1.36(b), filed September 28, 2005.

The request is **NOT APPROVED** as moot.

A review of the file record indicates that the power of attorney to attorneys associated with Customer Number 25227 has been revoked by the assignee of the entire interest of the patent application. Accordingly, the request to withdraw under 37 C.F.R. § 1.36(b) is moot.

All future communications from the Office will continue to be directed to the below-listed address until otherwise notified by applicant.

Telephone inquires concerning this decision should be directed to Petitions Examiner Liana Chase at 571-272- 3206.

David Bucci
Petitions Examiner
Office of Petitions

cc:

HELLER EHRMAN WHITE & MCAULIFFE LLP
1717 RHODE ISLAND AVE, NW
WASHINGTON DC 20036-3001

UNITED STATES PATENT AND TRADEMARK OFFICE

Commissioner for Patents
United States Patent and Trademark Office
P.O. Box 1450
Alexandria, VA 22313-1450
www.uspto.gov

MORRISON & FOERSTER LLP
1650 TYSONS BOULEVARD
SUITE 300
MCLEAN, VA 22102

COPY MAILED

APR 22 2005

OFFICE OF PETITIONS

In re Application of
Maslov et al.
Application No. 10/736,901
Filed: December 17, 2003
Attorney Docket No. 544092000122

Request for Information

This is a letter in response to the petition, filed November 19, 2004, which is being treated as a petition under 37 CFR 1.137(b) to revive the instant non-provisional application for failure to timely notify the U.S. Patent and Trademark (USPTO) of the filing of an application in a foreign country, or under a multinational treaty that requires publication of applications eighteen months after filing. *See* 37 CFR 1.137(f).

The Office requires that the notification of foreign filing include the date of the foreign filing. Petitioner should submit the date the foreign application was filed.

Although petitioner has the right to file a terminal disclaimer at any time, a terminal disclaimer is not necessary to revive the application. Since the application has not been revived, the terminal disclaimer filed with the petition may still be withdrawn. In replying to this letter, petitioner may wish to request withdrawal of the terminal disclaimer and refund of the $55 fee

A reply to this letter should be filed within two months. The reply should include a cover letter entitled "Renewed Petition under 37 CFR 1.137(b)."

Further correspondence with respect to this matter should be addressed as follows:

By mail: Mail Stop Petition
Commissioner for Patents
P.O. Box 1450
Alexandria, VA 22313-1450

By facsimile: (703) 872-9306
Attn: Office of Petitions

If a request for reconsideration is filed, and a decision on the new petition is not received within three months, petitioner may wish to call the number below to check on the status of the renewed petition.

Telephone inquiries concerning this decision should be directed to the undersigned at (571) 272-3203.

Charles Steven Brantley
Office of Petitions
Office of the Deputy Commissioner
for Patent Examination Policy

UNITED STATES PATENT AND TRADEMARK OFFICE

Commissioner for Patents
United States Patent and Trademark Office
P.O. Box 1450
Alexandria, VA 22313-1450
www.uspto.gov

MORRISON & FOERSTER LLP
1650 TYSONS BOULEVARD
SUITE 300
MCLEAN, VA 22102

COPY MAILED

MAY 0 2 2005

OFFICE OF PETITIONS

In re Application of
Maslov et al.
Application No. 10/736,901
Filed: December 17, 2003
Attorney Docket No. 544092000122

Decision on Petition

This is a corrected decision on the petition, filed November 19, 2004, which is being treated as a petition under 37 CFR 1.137(b) to revive the instant non-provisional application for failure to timely notify the U.S. Patent and Trademark (USPTO) of the filing of an application in a foreign country, or under a multinational treaty that requires publication of applications eighteen months after filing. *See* 37 CFR 1.137(f).

The petition is **GRANTED**.

Petitioner states that the instant nonprovisional application is the subject of an application filed in an eighteen-month publication country on February 6, 2004. However, the USPTO was unintentionally not notified of this filing within 45 days subsequent to the filing of the subject application in an eighteen-month publication country. As a result, this application became abandoned pursuant to 35 U.S.C. § 122(b)(2)(B)(iii) and 37 CFR 1.213(c) for failure to timely notify the Office of the filing of an application in a foreign country or under a multilateral international agreement that requires publication of applications 18 months after filing.

A petition to revive an application abandoned pursuant to 35 U.S.C. 122(b)(2)(B)(iii) for failure to notify the USPTO of a foreign filing must be accompanied by:

(1) the required reply which is met by the notification of such filing in a foreign country or under a multinational treaty;
(2) the petition fee as set forth in 37 CFR 1.17(m); and
(3) a statement that the entire delay in filing the required reply from the due date of the reply until the filing of a grantable petition was unintentional.

The instant petition has been found to be in compliance with the above statute and 37 CFR 1.137(b). Accordingly, the failure to timely notify the USPTO of a foreign or international filing within 45 days after the date of filing of such foreign or international application as provided by 35 U.S.C. § 122(b)(2)(B)(iii) and 37 CFR 1.213(c) is accepted as having been unintentionally delayed.

The previous Request and Certification under 35 U.S.C. § 122(b)(2)(B)(i) has been rescinded.

A terminal disclaimer is not necessary to revive the application. The terminal disclaimer will not be entered and the $55 will be credited to petitioner's deposit account.

The application will be referred to Technology Center Art Unit 2837 for examination in due course.

Telephone inquiries concerning this decision should be directed to the undersigned at (571) 272-3203.

Charles Steven Brantley
Office of Petitions
Office of the Deputy Commissioner
for Patent Examination Policy

UNITED STATES PATENT AND TRADEMARK OFFICE

COMMISSIONER FOR PATENTS
UNITED STATES PATENT AND TRADEMARK OFFICE
P.O. BOX 1450
ALEXANDRIA, VA 22313-1450
www.uspto.gov

ALEX CHARTOVE
MORRISON AND FOERSTER LLP
1650 TYSONS BLVD STE 300
MCLEAN, VA 22102

COPY MAILED

JUL 24 2006

OFFICE OF PETITIONS

In re Application of :
Boris A. Maslov et al :
Application No. 10/736,901 : DECISION ON PETITION
Filed: December 17, 2003 : TO WITHDRAW
Attorney Docket No. 544092000122 : FROM RECORD
:

This is a decision on the Request to Withdraw as attorney or agent of record under 37 C.F.R. § 1.36(b), filed September 28, 2005.

The request is **NOT APPROVED** as moot.

A review of the file record indicates that the power of attorney to Alex Chartove has been revoked by the assignee of the patent application. Accordingly, the request to withdraw under 37 C.F.R. § 1.36(b) is moot.

The correspondence address of record remains unchanged, which is the address indicated below.

Telephone inquires concerning this decision should be directed to Irvin Dingle at 571-272- 3210..

Amelia Au
Petitions Examiner
Office of Petitions

cc: Heller, Ehrman, White & McAuliffe LLP
1717 Rhode Island Ave., NW
Washington, DC 20036-3001

UNITED STATES PATENT AND TRADEMARK OFFICE

Commissioner for Patents
United States Patent and Trademark Office
P.O. Box 1450
Alexandria, VA 22313-1450
www.uspto.gov

BACON & THOMAS, PLLC
625 SLATERS LANE
FOURTH FLOOR
ALEXANDRIA VA 22314

COPY MAILED

JUN 22 2007

OFFICE OF PETITIONS

In re Application of
Crowley
Application No.10/736,907
Filed: December 17, 2003
Title of Invention: Dynamic Pressure Transmitter

DECISION ON PETITION

This is a decision on the petition under 37 CFR §1.137(b) filed June 7, 2007 to revive the above-identified application.

This petition is hereby **Dismissed.**

Any request for reconsideration must be submitted within TWO (2) Months from the mail date of this decision. Extensions of time under 37 CFR 1.136(a) are permitted. The reconsideration request should include a cover letter entitled "Renewed Petition under 37 CFR 1.137(b)". This is **not** a final agency action within the meaning of 5 U.S.C. §704.

This above-identified application became abandoned for failure to file a response to a Notice to file Missing Parts of a Nonprovisional Application which was mailed on March 25, 2004. The Notice to File Missing Parts set an extendable two (2) month period for reply. No extensions of time were obtained under the provisions of 37 CFR §1.136(a). Accordingly, this application became abandoned on May 26, 2004. A Notice of Abandonment was mailed on December 8, 2004.

A grantable petition under 37 CFR 1.137(b) must be accompanied by: (1) the required reply, unless previously filed; (2) the petition fee as set forth in 37 CFR 1.17(m); (3) a statement that the entire delay in filing the required reply from the due date for the reply until the filing of a grantable petition pursuant to 37 CFR 1.137(b) was unintentional; and (4) any terminal disclaimer (and fee as set forth in 37 CFR 1.20(d)) required by 37 CFR 1.137(c). Where there is a question as to whether either the abandonment or the delay in filing a petition under 37 CFR 1.137 was unintentional, the Director may require additional information. See MPEP 711.03 (c)(III)(c) and (D).

Pursuant to petitioner's request deposit account 02-0200 will be charged the $790.00 filing fee.

The instant petition lacks item(s) (3). The above-identified application has been abandoned for an extended period of time. The statement of unintentional delay presented in the petition does not comply with the current rule. Pursuant to 37 CFR 1.137(b)(3) a statement that "the entire delay in filing the required reply from the due date for the reply until the filing of a grantable petition pursuant to 37 CFR 1.137(b) was unintentional" is required.

Further Correspondence with respect to this matter should be addressed as follows:

By mail:	Mail Stop Petition Commissioner for Patents P.O. Box 1450 Alexandria, VA 22313-1450
By facsimile:	(571) 273-8300
By delivery service: (FedEx, UPS, DHL, etc.)	U.S. Patent and Trademark Office Customer Service Window, Randolph Building 401 Dulany Street Alexandria, VA 22314

Telephone inquiries concerning this matter should be directed to the undersigned at (571) 272-3215.

Charlema R. Grant

Charlema R. Grant
Petitions Attorney
Office of Petitions

UNITED STATES PATENT AND TRADEMARK OFFICE

Commissioner for Patents
United States Patent and Trademark Office
P.O. Box 1450
Alexandria, VA 22313-1450
www.uspto.gov

BACON & THOMAS, PLLC
625 SLATERS LANE
FOURTH FLOOR
ALEXANDRIA VA 22314

COPY MAILED

SEP 10 2007

OFFICE OF PETITIONS

In re Application of
Crowley
Application No.10/736,907
Filed: December 17, 2003
Title of Invention: Dynamic Pressure Transmitter

DECISION ON PETITION

This is a decision on the renewed petition under 37 CFR §1.137(b), filed August 22, 2007, to revive the above-identified application.

This above-identified application became abandoned for failure to file a response to a Notice to file Missing Parts of a Nonprovisional Application which was mailed on March 25, 2004. The Notice to File Missing Parts set an extendable two (2) month period for reply. No extensions of time were obtained under the provisions of 37 CFR §1.136(a). Accordingly, this application became abandoned on May 26, 2004. A Notice of Abandonment was mailed on December 8, 2004. A petition under 37 CFR 1.137(b) was dismissed on June 22, 2007.

The requirements for a grantable petition under 37 CFR §1.137(b) have been met. This petition is hereby **Granted**.

This application is being forwarded to the Office of Initial Patent Examination for further processing of the application.

Telephone inquiries concerning this matter should be directed to the undersigned at (571) 272-3215.

Charlema R. Grant

Charlema R. Grant
Petitions Attorney
Office of Petitions

UNITED STATES PATENT AND TRADEMARK OFFICE

Commissioner for Patents
United States Patent and Trademark Office
P.O. Box 1450
Alexandria, VA 22313-1450
www.uspto.gov

CROWELL & MORING LLP
INTELLECTUAL PROPERTY GROUP
P.O. BOX 14300
WASHINGTON, DC 20044-4300

COPY MAILED

APR 2 8 2005

OFFICE OF PETITIONS

In re Application of :
Stahlecker :
Application No. 10/736,910 : Decision on Petition
Filed: December 17, 2003 :
Attorney Docket No. 010971.52963US :

This is a decision on the petition under 37 CFR 1.137(a), filed January 7, 2005, to revive the above-identified application. The petition is also being treated under 37 CFR 1.181 (no fee) as a petition to withdraw the holding of abandonment.

The petition is under 37 CFR 1.181 is **granted.**

The petition under 37 CFR 1.137(a) is **dismissed as moot**.

The above-identified application became abandoned for failure to reply in a timely manner to the Notice to File Missing Parts of Application (Notice) mailed March 25, 2004. The Notice set a period for reply of two (2) months from the mail date of the Notice. No extensions of time under the provisions of 37 CFR 1.136(a) were obtained. Accordingly, the above-identified application was deemed abandoned as of June 26, 2004. A Notice of Abandonment was mailed on December 8, 2004.

Petitioner contends the Notice of Missing Parts was not received. A review of the electronic file wrapper indicates the Notice of Missing Parts was returned as undelivered by the United States Postal Service. A review of a copy of the front envelope fails to indicate the reason the correspondence was returned. However, the Notice was clearly not delivered to petitioner.

The Notice of Abandonment is hereby vacated and the holding of abandonment withdrawn.

Since the petition has been granted under 37 CFR 1.181, the petitioner's request to have the petition considered under 37 CFR 1.137(a) is dismissed as moot. No petition fee is required for a petition to withdraw holding of abandonment under 37 CFR 1.181. Therefore, the petition fee is refundable.

The fee for a petition under 37 CFR 1.137(a) is currently $500 for a large entity.[1] Petitioner submitted $110. As a result the Office charged $390 to petitioner's deposit account on January 10, 2005. The total fee of $500 will be credited to petitioner's deposit account.

The Official of Initial Patent Examination will be informed the application has been revived and will take steps to further process the application.

---

[1] See Revision of Patent Fees for Fiscal Year 2005, 69 Fed. Reg. 52604 (Aug. 27, 2004) and Changes to Support Implementation of the United States Patent and Trademark Office 21st Century Strategic Plan, 1287 Off. Gaz. Pat. Office 67 (Oct. 12, 2004).

Telephone inquiries should be directed to Petitions Attorney Steven Brantley at (571) 272-3203.

Charles Steven Brantley
Petitions Attorney
Office of Petitions

UNITED STATES PATENT AND TRADEMARK OFFICE

Commissioner for Patents
United States Patent and Trademark Office
P.O. Box 1450
Alexandria, VA 22313-1450
www.uspto.gov

MICROSOFT CORPORATION
ONE MICROSOFT WAY
REDMOND WA 98052-6399

MAILED

JUN 15 2010

OFFICE OF PETITIONS

In re Application of Calbucci et. al. :
Application No. 10/736,915 : Decision on Petition
Filing Date: December 16, 2003 :
Attorney Docket No. 303700.01 :

This is a decision on the petition under 37 CFR 1.137(b), filed February 26, 2010, to revive the above-identified application.

The petition is **granted**.

The application became abandoned for failure to reply in a timely manner to the final Office action issued June 30, 2009, which set a shortened statutory period for reply of three (3) months. An extension of time under the provisions of 37 CFR 1.136(a) was not obtained. Accordingly, the above-identified application became abandoned on October 1, 2009. A Notice of Abandonment was issued on February 3, 2010.

The instant petition requests revival of the application.

A grantable petition under 37 CFR 1.137(b) must be accompanied by:

(1) The reply required to the outstanding Office action or notice, unless previously filed,
(2) The petition fee,
(3) A statement that the entire delay in filing the required reply from the due date for the reply until the filing of a grantable petition pursuant to 37 CFR 1.137(b) was unintentional, and
(4) A terminal disclaimer and fee if the application was filed on or before June 8, 1995 or if the application is a design application.

Petitioner has submitted a reply to the final Office action in the form of a request for continued examination. Petitioner has submitted the required petition fee of $1620. Petitioner has stated the entire delay in filing the required reply from the due date for the reply until the filing of a grantable petition pursuant to 37 CFR 1.137(b) was unintentional.

Petitioner has met the requirements to revive the above-identified application pursuant to 37 CFR 1.137(b). Therefore, the petition is granted and the application is revived.

Technology Center Art Unit 2167 will be informed of the instant decision and the application will be further examined in due course.

Telephone inquiries regarding this communication should be directed to Petitions Attorney Steven Brantley at (571) 272-3203 or in his absence to Amy Gandhi at (571) 272-6699.

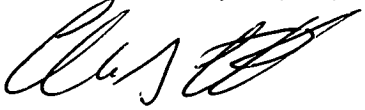

Charles Steven Brantley
Senior Petitions Attorney
Office of Petitions

UNITED STATES PATENT AND TRADEMARK OFFICE

Commissioner for Patents
United States Patent and Trademark Office
P.O. Box 1450
Alexandria, VA 22313-1450
www.uspto.gov

JOSEPH T. GUY PH.D.
NEXSEN PRUET JACOBS & POLLARD LLP
201 W. MCBEE AVENUE
GREENVILLE, SC 29603

COPY MAILED

DEC 22 2004

OFFICE OF PETITIONS

In re Application of
Johan LaMotte, et al.
Application No. 10/736,926
Filed: December 16, 2003
Atty Docket No. 27500-192

ON PETITION

This is a decision on the petition styled "Petition to Accept Unintentionally Delayed Response In An Abandoned Application (37 CFR 1.378b), filed October 14, 2004, which is being treated as a petition under 37 CFR 1.137(b) to revive the above-identified application.

The application became abandoned for failure to timely respond to a Notice to File Corrected Application Papers mailed April 2, 2004. The notice set a period of response of TWO MONTHS and required substitute drawings in compliance with 37 CFR 1.84 and 37 CFR 1.21. On October 14, 2004, the present petition was filed.

37 CFR 1.137(b)(3) requires a statement that the entire delay in filing the required reply from the due date for the reply until the filing of a grantable petition pursuant to 37 CFR 1.137(b) was unintentional. Although the statement contained in the petition varies from the language required by 37 CFR 1.137(b)(3), the statement will be construed as the statement required by 37 CFR 1.137(b)(3). Petitioner must notify the Office if this is **not** a correct interpretation of the statement contained in the instant petition.

The petition is **GRANTED**.

The application is being returned to the Office of Initial Patent Examination (OIPE) for further review of the drawings provided on October 14, 2004.

Telephone inquires related to this decision should be directed to the undersigned at (571) 272-3204. Telephone inquiries related to OIPE processing should be directed to their hotline at (703) 308-1202.

Sherry D. Brinkley
Petitions Examiner
Office of Petitions
Office of the Deputy Commissioner
for Patent Examination Policy

UNITED STATES PATENT AND TRADEMARK OFFICE

Commissioner for Patents
United States Patent and Trademark Office
P.O. Box 1450
Alexandria, VA 22313-1450
www.uspto.gov

KALIKO & YEAGER, L.L.C.
500 NORTH FRANKLIN
TURNPIKE
RAMSEY NJ 07446

COPY MAILED

FEB 0 8 2007

OFFICE OF PETITIONS

In re Application of :
Edward Gerard Dolton III et al :
Application No. 10/736,937 : ON PETITION
Filed: December 16, 2003 :
Attorney Docket No. ED-001 :

This is a decision on the petition, filed October 16, 2006, under 37 CFR 1.59 to expunge incorrectly filed documents.

The petition is **GRANTED**.

Petitioner states that on October 6, 2006, a response to an examiner's Office action and associated documents from Application No. 11/176,541 were inadvertently filed in Application No. 10/736,937. Consequently, petitioner requests that the inadvertently filed response to the examiner's Office action and associated documents be expunged from the record of Application No. 10/736,937.

As requested, the misidentified papers have been expunged from the above file.

Telephone inquiries should be directed to the undersigned at (571) 272-3208.

Karen Creasy

Karen Creasy
Petitions Examiner
Office of Petitions

UNITED STATES PATENT AND TRADEMARK OFFICE

Commissioner for Patents
United States Patent and Trademark Office
P.O. Box 1450
Alexandria, VA 22313-1450
www.uspto.gov

COOLEY GODWARD KRONISH LLP
3000 EL CAMINO REAL
5 PALO ALTO SQUARE
PALO ALTO CA 94306

COPY MAILED

NOV 17 2006

OFFICE OF PETITIONS

In re Application of :
TEUNEN, et al. :
Application No. 10/736,954 : DECISION ON PETITION
Filed: December 15, 2003 : TO WITHDRAW
Attorney Docket No. VOCE-002/00US : FROM RECORD
:

This is a decision on the Request to Withdraw as attorney or agent of record under 37 C.F.R. § 1.36(b), filed May 1, 2006.

The request is **APPROVED**.

A grantable request to withdraw as attorney/agent of record must be signed by every attorney/agent seeking to withdraw or contain a clear indication that one attorney is signing on behalf of another/others. A request to withdraw will not be approved unless at least 30 (thirty) days would remain between the date of approval and the later of the expiration date of a time to file a response or the expiration date of the maximum time period which can be extended under 37 C.F.R. § 1.136(a).

The request was signed by William S. Galliani on behalf of all attorneys of record who are associated with customer No. 23419. All attorneys/agents associated with the Customer Number 23419 have been withdrawn.

Applicant is reminded that there is no attorney of record at this time.

The request to change the correspondence of record is not acceptable as the requested correspondence address is not that of: (1) the first named signing inventor; or (2) an intervening assignee of the entire interest under 37 C.F.R 3.71. All future communications from the Office will be directed to the first named signing inventor at the first copied address below until otherwise properly notified by the applicant.

Telephone inquiries concerning this decision should be directed to the undersigned at 571-272-7253.

Monica A. Graves
Petitions Examiner
Office of Petitions

cc: **Remco Teunen**
783 Roble Avenue, #4
Menlo Park, CA 94025

cc: **Charles Gotlieb**
Innovation Partners
540 University Avenue, Suite 300
Palo Alto, CA 94301

UNITED STATES PATENT AND TRADEMARK OFFICE

UNITED STATES DEPARTMENT OF COMMERCE
United States Patent and Trademark Office
Address: COMMISSIONER FOR PATENTS
P.O. Box 1450
Alexandria, Virginia 22313-1450
www.uspto.gov

APPLICATION NUMBER	FILING OR 371 (c) DATE	FIRST NAMED APPLICANT	ATTY. DOCKET NO./TITLE
10/736,954	12/15/2003	Remco Teunen	VOCE-002/00US

CONFIRMATION NO. 5536

OC000000021271239

23419
COOLEY GODWARD KRONISH LLP
3000 EL CAMINO REAL
5 PALO ALTO SQUARE
PALO ALTO, CA 94306

Date Mailed: 11/17/2006

NOTICE REGARDING CHANGE OF POWER OF ATTORNEY

This is in response to the Power of Attorney filed 05/01/2006.

- The withdrawal as attorney in this application has been accepted. Future correspondence will be mailed to the new address of record. 37 CFR 1.33.

MONICA A GRAVES
OP (571) 272-7253

FORMER ATTORNEY/AGENT COPY

UNITED STATES PATENT AND TRADEMARK OFFICE

Commissioner for Patents
United States Patent and Trademark Office
P.O. Box 1450
Alexandria, VA 22313-1450
www.uspto.gov

RADER, FISHMAN & GRAUER PLLC
39533 WOODWARD AVENUE
SUITE 140
BLOOMFIELD HILLS, MI 48304-0610

COPY MAILED

SEP 1 7 2004

OFFICE OF PETITIONS

In re Application of :
Alain Duerr :
Application No.10/736,957 :
Filed: December 16, 2003 :
Attorney Docket No. 66012-0010 :

DECISION GRANTING PETITION

This is a decision on the petition filed August 5, 2004, requesting that the above-identified application Be accorded a filing date of December 16, 2003, with the one sheet of drawing filed on that date as part of the original disclosure.

On December 16, 2003, the above-identified application was filed. On July 28, 2004, the Office of Initial Patent Examination mailed a "Notice of Incomplete Nonprovisional Application" (the "Notice"), stating that the application had not be accorded a filing date because drawings were not found with the application papers, but appeared to be required. The Notice also required an oath or declaration to be filed. The Notice allowed a non-extendable two-month period for reply beginning from the mailing date of the Notice.

In response, on August 5, 2004, applicants filed the present petition and a copy of an Office date-stamped postcard showing that, among other items, one sheet of drawings was received on December 16, 2003.

Upon review of the record, one sheet of drawings containing Figures 1, 2, 2a, 3, 3a, 4, and 5 were found among the application papers. Further, the Office date-stamped postcard acknowledges receipt of one sheet of drawings on December 16, 2003. Therefore, the application, including the one sheet of drawings was complete on filing and entitled to a filing date of December 16, 2003.

Accordingly, the petition is granted; the Notice is vacated, accordingly. Deposit account 18-0013 will be refunded the petition fee of $130.00

It is noted that an oath or declaration was not found with the petition papers. The instant decision is intended to resolve the question of whether a filing date should be accorded the application. It is assumed that the Office of Initial Patent Examination will now issue a Notice to File Missing parts of Nonprovisional Application requiring an oath or declaration and surcharge for the late filing of the same.

The application file is being returned to the Office of Initial Patent Examination for further processing with a filing date of December 16, 2003.

Any inquiries related to this decision should be directed to the undersigned at (703) 305-0010.

Kenya A. McLaughlin

Kenya A. McLaughlin
Petitions Attorney
Office of Petitions

UNITED STATES PATENT AND TRADEMARK OFFICE

Commissioner for Patents
United States Patent and Trademark Office
P.O. Box 1450
Alexandria, VA 22313-1450
www.uspto.gov

KLARQUIST SPARKMAN
ONE WORLD TRADE CENTER, SUITE 1600
121 S.W. SALMON STREET
PORTLAND, OR 97204

COPY MAILED

JAN 1 4 2005

OFFICE OF PETITIONS

In re Application of :
Gilford et al : DECISION GRANTING
Application No. 10/736,967 : PETITION
Effective Date: December 15, 2003 :
Attorney Docket No. 1011-67536 :

This is a decision on the petition under 37 CFR 1.10 (d), filed February 2, 2004, requesting that the above-identified application be accorded a filing date of December 15, 2003.

Applicants request the later filing date on the basis that the application was purportedly deposited with the U.S. Postal Service (USPS) as Express Mail on December 15, 2003, pursuant to the requirements of 37 CFR 1.10. In support, applicants provided, inter alia, a copy of the Express Mail label, receipt no. EV339202109US, showing a Date-In of December 13, 2003. Further, the petition is accompanied by copies of the USPS Track/Confirm system information and the Express Mail Corporate Account Mailing Statement, both showing that the package in question was accepted and charged on December 15, 2003. The same Express Mail Number found on the original Application Transmittal Letter located in the official file.

In view of the above, the evidence is convincing that the application was deposited as "Express Mail" with the US Postal Service on December 15, 2003. Accordingly, the instant application file is entitled to a filing date of December 15, 2003, and has been so accorded.

The petition is granted. No petition fee is required and none has been charged.

Telephone inquiries specific to this matter should be directed to Wan Laymon at (571) 272-3220.

This matter is being referred to the Office of Initial Patent Examination for preexamination processing.

Brian Hearn
Senior Petitions Examiner
Office of Petitions
Office of the Deputy Commissioner
for Patent Examination Policy

UNITED STATES PATENT AND TRADEMARK OFFICE

Commissioner for Patents
United States Patent and Trademark Office
P.O. Box 1450
Alexandria, VA 22313-1450
www.uspto.gov

COPY MAILED

OCT 27 2008

TUCKER ELLIS & WEST LLP
1150 HUNTINGTON BUILDING
925 EUCLID AVENUE
CLEVELAND OH 44115-1414

In re Application of :
MUNSON Jr., David M. :
Application No. 10/737,018 : DECISION ON PETITION
Filed: December 16, 2003 : TO WITHDRAW
Attorney Docket No. **77535/00002** : FROM RECORD
:

This is a decision on the Request to Withdraw as attorney or agent of record under 37 C.F.R. § 1.36(b), filed May 12, 2008 and resubmitted August 20, 2008.

The request is **NOT APPROVED** because it is moot.

A review of the file record indicates that the power of attorney to Tucker Ellis & West LLP has been revoked by the applicant of the patent application on August 20, 2008. Accordingly, the request to withdraw under 37 C.F.R. § 1.36(b) is moot.

All future communications from the Office will continue to be directed to the below-listed address until otherwise notified by applicant.

Telephone inquires concerning this decision should be directed to Michelle R. Eason at 571-272-4231.

Michelle R. Eason
Paralegal Specialist
Office of Petitions

cc: **HEMINGWAY & HANSEN, LLP**
1717 MAIN STREET
SUITE 2500
DALLAS, TX 75201

UNITED STATES PATENT AND TRADEMARK OFFICE

COMMISSIONER FOR PATENTS
UNITED STATES PATENT AND TRADEMARK OFFICE
P.O. BOX 1450
ALEXANDRIA, VA 22313-1450
www.uspto.gov

DUANE MORRIS LLP
IP DEPARTMENT (TSMC)
30 SOUTH 17TH STREET
PHILADELPHIA, PA 19103-4196

COPY MAILED

JUL 05 2006

OFFICE OF PETITIONS

In re Application of
Dahchung Oweyang, et al.
Application No. 10/737,024
Filed: December 16, 2003
Attorney Docket No.
N1085-00158 [TSMC2003-022

ON PETITION

This is a decision on the petition under 37 CFR 1.137(b) to revive the above-identified application, filed February 6, 2006.

The petition is **GRANTED**.

The application became abandoned for failure to pay the issue fee on or before June 22, 2005. A Notice of Abandonment was mailed on January 9, 2006. In response, on February 6, 2006, the present petition was filed.

The petition satisfies the requirements of 37 CFR 1.137(b) in that petitioner has supplied (1) the reply in the form of the requisite issue/publication fee; (2) the petition fee of $1,500; and (3) an adequate statement of unintentional delay.

The application is being referred to the Office of Publications to be processed into a patent.

Telephone inquires related to this decision should be directed to the undersigned at (571) 272-3204. Telephone inquiries related to processing at Publishing Division should be directed to (571) 272-4200.

Sherry D. Brinkley
Petitions Examiner
Office of Petitions

UNITED STATES PATENT AND TRADEMARK OFFICE

Commissioner for Patents
United States Patent and Trademark Office
P.O. Box 1450
Alexandria, VA 22313-1450
www.uspto.gov

ATK
c/o VIDAS, ARRETT & STEINKRAUS, P.A.
6109 BLUE CIRCLE DRIVE
SUITE 2000
MINNETONKA MN 55343

COPY MAILED

JUN 0 6 2007

OFFICE OF PETITIONS

In re Patent No. 6,951,161 :
Application No. 10/737,032 :
Filed: December 17, 2003 : ON PETITION
Issued: October 4, 2005 :
Attorney Docket No. A30.2-10296-US01 :

This is a decision on the petition, filed August 18, 2005, under 37 CFR 3.81(b)[1] to correct the name of the assignee on the front page of the above-identified patent by way of a Certificate of Correction.

The request is **DISMISSED**.

Petitioner states that the correct assignee's name is Alliant Techsystems Inc. and that an incorrect assignee's name, which included a comma between Techsystems and Inc., was included on the Part B - Fee(s) Transmittal form at the time of payment of the issue fee. Accordingly, petitioner requests that a Certificate of Correction be issued with the proper name of the assignee.

A review of Office database assignment records reflects that the assignment recorded on August 8, 2005 was between Kenneth Ceola and Alliant Techsystems, Inc. On both the Recordation Form Cover Sheet and the actual Assignment, there is a comma between Techsystems and Inc.

Petitioner may wish to submit a corrected assignment as detailed in MPEP 323. However, since 37 CFR 3.81(b) requires that the assignment be recorded *before issuance of the patent,* issuance of a certificate of correction would not be proper.

Inquiries concerning this decision should be directed to Petitions Examiner Liana Walsh at (571) 272-3206.

Frances Hicks
Petitions Examiner
Office of Petitions

[1] *See* MPEP 1309, subsection II and Official Gazette of June 22, 2004

IFW

UNITED STATES PATENT AND TRADEMARK OFFICE

OIPE IAP76
JUN 11 2007
PATENT & TRADEMARK OFFICE

Commissioner for Patents
United States Patent and Trademark Office
P.O. Box 1450
Alexandria, VA 22313-1450
www.uspto.gov

ATK
c/o VIDAS, ARRETT & STEINKRAUS, P.A.
6109 BLUE CIRCLE DRIVE
SUITE 2000
MINNETONKA MN 55343

COPY MAILED

JUN 06 2007

OFFICE OF PETITIONS

In re Patent No. 6,951,161	:	
Application No. 10/737,032	:	
Filed: December 17, 2003	:	ON PETITION
Issued: October 4, 2005	:	
Attorney Docket No. A30.2-10296-US01	:	

This is a decision on the petition, filed August 18, 2005, under 37 CFR 3.81(b)[1] to correct the name of the assignee on the front page of the above-identified patent by way of a Certificate of Correction.

The request is **DISMISSED**.

Petitioner states that the correct assignee's name is Alliant Techsystems Inc. and that an incorrect assignee's name, which included a comma between Techsystems and Inc., was included on the Part B - Fee(s) Transmittal form at the time of payment of the issue fee. Accordingly, petitioner requests that a Certificate of Correction be issued with the proper name of the assignee.

A review of Office database assignment records reflects that the assignment recorded on August 8, 2005 was between Kenneth Ceola and Alliant Techsystems, Inc. On both the Recordation Form Cover Sheet and the actual Assignment, there is a comma between Techsystems and Inc.

Petitioner may wish to submit a corrected assignment as detailed in MPEP 323. However, since 37 CFR 3.81(b) requires that the assignment be recorded *before issuance of the patent,* issuance of a certificate of correction would not be proper.

Inquiries concerning this decision should be directed to Petitions Examiner Liana Walsh at (571) 272-3206.

Frances Hicks
Petitions Examiner
Office of Petitions

[1] *See* MPEP 1309, subsection II and Official Gazette of June 22, 2004

UNITED STATES PATENT AND TRADEMARK OFFICE

Commissioner for Patents
United States Patent and Trademark Office
P.O. Box 1450
Alexandria, VA 22313-1450
www.uspto.gov

HEWLETT PACKARD COMPANY
P O BOX 272400, 3404 E. HARMONY ROAD
INTELLECTUAL PROPERTY ADMINISTRATION
FORT COLLINS CO 80527-2400

COPY MAILED

FEB 10 2006

OFFICE OF PETITIONS

In re Application of
Harris et al.
Application No. 10/737,045
Filed: December 16, 2003
Attorney Docket Number: 200310972-1
Title of Invention: System and Method for Power Distribution

ON PETITION

This is a decision on the petition filed December 12, 2005, under 37 CFR 1.137(a) to revive the above-identified application.

The petition to revive under 37 CFR § 1.137(a) is **DISMISSED**.

Any request for reconsideration must be submitted within TWO (2) MONTHS from the mail date of this decision. Extensions of time under 37 CFR § 1.136(a) are permitted. The reconsideration request should include a cover letter entitled "Renewed Petition under 37 CFR § 1.137(a)." This is **not** a final agency action within the meaning of 5 U.S.C. § 704.

This application became abandoned for failure to timely submit the issue and publication fees , as required by the Notice of Allowance and Fee (s) Due which was mailed August 30, 2005. The Notice of Allowance and Fee (s) Due set a three (3) month statutory period for reply. Extensions of time were not available under the provisions of 37 CFR 1.136(a). Accordingly, this application became abandoned on December 1, 2005. This decision precedes the mailing of a Notice of Abandonment.

PETITION TO REVIVE UNDER 37 CFR § 1.137(a)

A grantable petition under 37 CFR § 1.137(a) must be accompanied by:

(1) the required reply,[1]

(2) the petition fee,

(3) a showing to the satisfaction of the Director that the entire delay in filing the required reply from the due date for the reply until the filing of a grantable petition pursuant to this paragraph was unavoidable, and

(4) a terminal disclaimer and fee if the application was filed on or before June 8, 1995 or if the application is a design application.

The instant petition lacks item (3).

As to item (3), the showing of record is not sufficient to establish to the satisfaction of the Director that the delay was unavoidable within the meaning of 37 CFR §1.137(a).

The Office may revive an abandoned application if the delay in responding to the relevant outstanding office requirement is shown to the satisfaction of the Commissioner to have been "unavoidable." See, 37 CFR § 1.137(a)(3). Decisions on reviving abandoned applications have adopted the reasonably prudent person standard in determining if the delay was unavoidable. Ex parte Pratt, 1887 Dec. Comm'r Pat. 31, 32-33 (Comm'r Pat. 1887) (the term "unavoidable" is applicable to ordinary human affairs, and requires no more greater care or diligence than is generally used and observed by prudent and careful men in relation to their most important business."); In re Mattullath, 38 App. D.C. 497, 514-15 (D.C. Cir. 1912); Ex parte Henrich, 1913 Dec. Comm'r Pat. 139, 141 (Comm'r Pat. 1913). In addition, decisions on revival are made on a "case by case basis, taking all the facts and circumstances into account." Smith v. Mossinghoff, 671 F.2d 533, 538, 213 USPQ 977, 982 (D.C. Cir. 1982). A petition to revive an application as unavoidably abandoned cannot be granted where petitioner has failed to meet his or her burden of establishing the cause of the unavoidable delay. Haines v. Quigg, 673 F. Supp. 314, 5 USPQ2D 1130 (N.D. Ind. 1987).

The showing of record is inadequate to establish unavoidable delay within the meaning of 35 U.S.C. § 133 and 37 CFR 1.137(a).[2] Specifically, an application is "unavoidably" abandoned only where petitioner, or counsel for petitioner, takes all action necessary for a proper response to the outstanding Office action, but through the intervention of unforeseen circumstances, such as failure of mail, telegraph, facsimile, or the negligence of otherwise reliable employees, the response is not timely received in the Office.[3]

Petitioner contends the delay in paying the the issue and publication fees was due to error on the part of an employee of Fulbright & Jaworski. In support, petitioner has provided a copy of a checklist and procedure for Hewlett-Packard Notice of Allowance (exhibit 1), a copy of a letter prepared in accordance with exhibit 1 (exhibit 2), the declaration of Elise Perkins, an IP secretary for Fulbright and Jaworski (exhibit 3) and a screen shot of an actions page of the docket for the above-identified application which purportedly shows an erroneous docket entry (exhibit 4). Petitioner states the secretary was responsible for preparing a letter reporting the findings and review (exhibit 2) and

---

[1] In a nonprovisional application abandoned for failure to prosecute, the required reply may be met by the filing of a continuing application. In an application or patent, abandoned or lapsed for failure to pay the issue fee or any portion thereof, the required reply must be the payment of the issue fee or any outstanding balance thereof.

[2] See MPEP 711(c)(III)(c)(2) for a discussion of the requirements for a showing of unavoidable delay.

[3] Ex parte Pratt, 1887 Dec. Comm'r Pat. 31 (Comm'r Pat. 1887).

advising Hewlett-Packard the case was in condition for the issue fee to be paid. The petition and declaration of Ms. Perkins states that although Ms. Perkins drafted the requisite letter for attorney Papalas signature, Ms. Perkins failed to mail the letter to Hewlett-Packard. Further, an entry was made in the docket system which should have only been made after the mailing of the letter to Hewlett-Packard.

The petition has been considered and it has been determined that sufficient facts have not been provided to establish unavoidable delay due to a docket error.

A delay resulting from an error (e.g., a docketing error) on the part of an employee in the performance of a clerical function may provide the basis for a showing of "unavoidable"delay, provided it is shown that:

(A) the error was the cause of the delay at issue;

(B) there was in place a business routine for performing the clerical function that could reasonably be relied upon to avoid errors in its performance; and

(C) the employee was sufficiently trained and experienced with regard to the function and routine for its performance that reliance upon such employee represented the exercise of due care.

As to item (A), it is noted that the Notice of Allowance and fees due was mailed to the correspondence address of record of Hewlett-Packard and not to the address of petitioner. Does Hewlett-Packard rely solely on the receipt of the letter from Fulbright & Jaworski (exhibit 2) before it pays an issue fee?

As to item (C) , neither the declaration of Ms. Perkins or the petition contain enough evidence that Ms. Perkins was sufficiently trained. Ms. Perkins merely states "I have been trained or experienced to carry out the procedures enumerated on the list". On renewed petition, a statement as to specifically what type of training was provided and the type of supervision Ms. Perkins receives should be included. In an effort to establish that reliance upon Ms. Perkins was an exercise in due care, petitioner should state whether Ms. Perkins has previously failed to adhere to the requirements of the checklist.

There is no indication that the person signing the present petition was ever given a power of attorney or authorization of agent to prosecute the above-identified application. If the person signing the present petition desires to receive future correspondence regarding this application, the appropriate power of attorney or authorization of agent must be submitted.

Alternative Venue

Petitioner may wish to consider filing a petition to revive based on unintentional abandonment under 37 CFR 1.137(b). A grantable petition pursuant to 37 C.F.R. § 1.137(b) must be accompanied by the required reply, the required petition fee ($750.00 for small entity), and a statement that the **entire** delay in filing the required reply from the due date for the reply until the filing of a grantable petition pursuant to 37 C.F.R. § 1.137(b) was unintentional.

The filing of a petition under 37 C.F.R. § 1.137(b) cannot be intentionally delayed, and therefore, must be filed promptly. A person seeking revival due to unintentional delay cannot make a statement that the delay was unintentional unless the entire delay, including the delay from the date it was discovered that the application was abandoned until the filing of the petition to revive under 37 C.F.R. § 1.137(b), was unintentional. A statement that the delay was unintentional is not appropriate if petitioner intentionally delayed the filing of a petition for revival under 37 C.F.R. § 1.137(b).

Further correspondence with respect to this matter should be addressed as follows:

By mail: Mail Stop Petition
Commissioner for Patents
P.O. Box 1450
Alexandria, VA 22313-1450

By facsimile: (571) 273-8300

By delivery service:
(FedEx, UPS, DHL, etc.) U.S. Patent and Trademark Office
Randolph Building
401 Dulany Street
Alexandria, VA 22314

Telephone inquiries should be directed to the undersigned at (571) 272-3215.

Charlema R. Grant
Petitions Attorney
Office of Petitions

cc: Jerry Mahurin
Fulbright & Jaworski, LLP
2200 Ross Avenue, Suite 2800
Dallas, Texas 2800

UNITED STATES PATENT AND TRADEMARK OFFICE

Commissioner for Patents
United States Patent and Trademark Office
P.O. Box 1450
Alexandria, VA 22313-1450
www.uspto.gov

HEWLETT PACKARD COMPANY
P O BOX 272400, 3404 E. HARMONY ROAD
INTELLECTUAL PROPERTY ADMINISTRATION
FORT COLLINS CO 80527-2400

COPY MAILED

MAR 0 6 2006

OFFICE OF PETITIONS

In re Application of :
Harris et al. :
Application No. 10/737,045 : ON PETITION
Filed: December 16, 2003 :
Attorney Docket Number: 200310972-1 :
Title of Invention: System and Method for Power Distribution :

This is a decision on the petition filed February 15, 2006, under 37 CFR 1.137(b) to revive the above-identified application.

This application became abandoned for failure to timely submit the issue and publication fees , as required by the Notice of Allowance and Fee (s) Due which was mailed August 30, 2005. The Notice of Allowance and Fee (s) Due set a three (3) month statutory period for reply. Extensions of time were not available under the provisions of 37 CFR 1.136(a). Accordingly, this application became abandoned on December 1, 2005. This decision precedes the mailing of a Notice of Abandonment. A petition under 37 CFR 1.137(a) was dismissed on February 10, 2006.

The requirements for a grantable petition under 37 CFR 1.137(b) have been met. This petition is hereby **Granted**.

This application is being forwarded to the Office of Patent Publication for processing into a patent.

Telephone inquiries should be directed to the undersigned at (571) 272-3215.

Charlema R. Grant

Charlema R. Grant
Petitions Attorney
Office of Petitions

cc: Jerry Mahurin
Fulbright & Jaworski, LLP
2200 Ross Avenue, Suite 2800
Dallas, Texas 2800

UNITED STATES PATENT AND TRADEMARK OFFICE

COMMISSIONER FOR PATENTS
UNITED STATES PATENT AND TRADEMARK OFFICE
P.O. BOX 1450
ALEXANDRIA, VA 22313-1450
www.uspto.gov

MARK CURRAN UNGARO
2144 TONA CIRCLE
LAS VEGAS NV 89109

COPY MAILED

JAN 0 4 2008

OFFICE OF PETITIONS

In re Application of :
Mark Curran Ungaro :
Application No. 10/737,091 : ON PETITION
Filed: December 17, 2003 :
Attorney Docket No. None :

This is a decision in response to the petition, filed August 23, 2007, under the provisions of 37 CFR 1.181 to withdraw the holding of abandonment.

The petition is **DISMISSED**.

Any request for reconsideration of this decision should be filed within two (2) months from the mail date of this decision. *Note* 37 CFR 1.181(f). The request for reconsideration should include a cover letter and be entitled as a "Renewed Petition under 37 CFR 1.181 to Withdraw the Holding of Abandonment."

The application became abandoned for failure to timely reply within the meaning of 37 CFR 1.113 to the final Office action, mailed January 22, 2007, which set a shortened statutory period for reply of three (3) months. No extensions of time under the provisions of 37 CFR 1.136(a) were obtained. Accordingly, the application became abandoned on April 23, 2007. A Notice of Abandonment was mailed on August 23, 2007.

Petitioner argues that the abandonment should be withdrawn since a timely response was filed on April 12, 2007.

A review of the record discloses that an amendment was filed on April 12, 2007, which is within the period set for reply. However, the amendment filed April 12, 2007 was considered non-responsive, since it did not place the application in condition for allowance as noted in the Advisory Action mailed July 31, 2007. A proper reply to a final Office action must be a Notice of Appeal (and appeal fee required by 37 CFR 1.17(b)), an amendment that *prima facie* places the application in condition for allowance, or the filing of a submission under 37 CFR 114 (RCE) or a continuing application under 37 CFR 1.53(b). See MPEP 711.03(c)(II)(A)(2).

In view of the above, the request to withdraw the holding of abandonment cannot be granted.

Petitioner is strongly encouraged to consider filing a petition under 37 CFR 1.137(b) to revive an unintentionally abandoned application instead of filing a renewed petition under 37 CFR 1.181 or a petition under 37 CFR 1.137(a).

Public Law 97-247, § 3, 96 Stat. 317 (1982), which revised patent and trademark fees, amended 35 U.S.C. § 41(a)(7) to provide for the revival of an "unintentionally" abandoned application without a showing that the delay in prosecution or in late payment of the issue fee was "unavoidable." This amendment to 35 U.S.C. § 41(a)(7) has been implemented in 37 CFR 1.137(b). An "unintentional" petition under 37 CFR 1.137(b) must be accompanied by the $770 petition fee.

The filing of a petition under 37 CFR 1.137(b) cannot be intentionally delayed and therefore must be filed promptly. A person seeking revival due to unintentional delay cannot make a statement that the delay was unintentional unless the entire delay, including the date it was discovered that the application was abandoned until the filing of the petition to revive under 37 CFR 1.137(b), was unintentional. A statement that the delay was unintentional is not appropriate if petitioner intentionally delayed the filing of a petition for revival under 37 CFR 1.137(b).

Petitioner may wish to consider hiring a registered patent attorney or agent to assist in the prosecution of this application. Additionally, petitioner is encouraged to contact the Inventors Assistance Center (IAC) by telephone at 800-786-9199 or 571-272-1000, Monday through Friday from 8:30 AM to 5:30 PM (EST). The IAC provides patent information and services to the public and is staffed by former Supervisory Patent Examiners and experienced Primary Examiners who answer general questions concerning patent examining policy and procedure.

Questions regarding this decision may be directed to the undersigned at 571-272-3204.

Further correspondence with respect to this matter should be addressed as follows:

By Mail: Mail Stop PETITION
Commissioner for Patents
P. O. Box 1450
Alexandria, VA 22313-1450

By hand: U. S. Patent and Trademark Office
Customer Service Window, Mail Stop Petitions
Randolph Building
401 Dulany Street
Alexandria, VA 22314

By facsimile: **(571) 273-8300**
Attn: Office of Petitions

Sherry D. Brinkley
Petitions Examiner
Office of Petitions

UNITED STATES PATENT AND TRADEMARK OFFICE

Commissioner for Patents
United States Patent and Trademark Office
P.O. Box 1450
Alexandria, VA 22313-1450
www.uspto.gov

OCT 19 2005

WHITEFORD, TAYLOR & PRESTON, LLP
ATTN: GREGORY M STONE
SEVEN SAINT PAUL STREET
BALTIMORE MD 21202-1626

In re Application of :
Timothy R. Emsky :
Serial No.: 10/737,098 : DECISION ON PETITION
Filed: June 22, 2001 :
For: Method and Apparatus for Therapeutic :
Treatment of Back Pain :

This is in response to applicants' petition filed July 5, 2005, to make the above-identified application special under the provisions of 37 CFR 1.102(d), based on infringement.

Applicant has satisfied the provisions set forth in M.P.E.P. 708.02, II. Therefore the petition is **GRANTED**.

The application will be forwarded to the examiner for action on the merits commensurate with this decision.

Should there be any questions with regard to this letter please contact Frederick Schmidt by letter addressed to the Director, Technology Center 3700, or by telephone at (571) 272-2975 or by facsimile transmission at (571) 273-8300.

Frederick R Schmidt, Director
Technology Center 3700

UNITED STATES PATENT AND TRADEMARK OFFICE

Commissioner for Patents
United States Patent and Trademark Office
P.O. Box 1450
Alexandria, VA 22313-1450
www.uspto.gov

KIMBERLY-CLARK WORLDWIDE, INC.
CATHERINE E. WOLF
401 NORTH LAKE STREET
NEENAH WI 54956

COPY MAILED

APR 07 2008

OFFICE OF PETITIONS

In re Application of
Lynn Brud et al.
Application No. 10/737,101
Filed: December 15, 2003
Attorney Docket No: 20246

ON PETITION

This is a decision on the petition filed March 24, 2008, under 37 CFR 1.181 to withdraw the holding of abandonment. The petition also pleads in the alternative to revive the instant application under 37 CFR 1.137(b).

The petition to withdraw the holding of abandonment is **GRANTED**.
The petition to revive is **DISMISSED** as involving moot issues.

In response to a Final Office Action mailed April 12, 2007, a Notice of Appeal was filed on July 12, 2007. Pursuant to 37 CFR 1.192(a) an appeal brief (and fee required by 37 CFR 1.17(c)) were required within two months of the filing of the Notice of Appeal. As an appeal brief (and appeal brief fee) was not filed within two (2) months of the Notice of Appeal filed July 12, 2007, the application was held abandoned on September 13, 2007. Accordingly, a Notice of Abandonment was mailed on February 28, 2008.

Petitioner asserts that an appeal brief and appeal brief fee were filed via facsimile transmission on September 12, 2007. In support, petitioner submits a copy of the appeal brief said to have been filed, which was acknowledged by the U.S. Patent and Trademark Office in an Auto-Reply Facsimile Transmission.

While, the requirement for filing papers with the USPTO is that every paper bear an appropriate application no. or identifier, a review of the materials submitted show that other identifiable information was found to be on the papers filed as the response and could therefore have been properly matched. However, because an incorrect application number was placed on the Facsimile Transmission Cover Sheet, the appeal brief was filed in an unrelated application and not matched to the instant application. The totality of the evidence, including the fact that the fee for the Appeal Brief was posted to the incorrect application on September 12, 2007, however shows that the response was timely filed.

Accordingly, the Notice of Abandonment mailed February 28, 2008 was mailed in error and is hereby withdrawn. In view thereof, there is no need to treat the petition alternatively filed under 37 CFR 1.137(b). The petition fee in the amount of $1540 will be credited back to deposit no. 11-0875 as no fee is due.

The appeal brief filed September 12, 2007 in 10/727,101 will be moved to 10/737,101. This matter is being referred to Technology Center 2115 for review of the appeal brief.

Telephone inquiries concerning this matter may be directed to the undersigned Petitions Attorney at (571) 272-3212.

Patricia Faison-Ball

Patricia Faison-Ball
Senior Petitions Attorney
Office of Petitions

UNITED STATES PATENT AND TRADEMARK OFFICE

Commissioner for Patents
United States Patent and Trademark Office
P.O. Box 1450
Alexandria, VA 22313-1450
www.uspto.gov

dss

Mailed: 1-6-06

In re application of :
Paul Danton Huish et al. : DECISION ON
Serial No.10/737,102 : PETITION
Filed: December 15, 2003 :
For: DETERGENT COMPOSITIONS CONTAINING ALPHA-SULFOFATTY ACID ESTERS AND METHODS OF MAKING AND USING THE SAME
:

This is a response to the PETITION TO WITHDRAW HOLDING OF ABANDONMENT UNDER 37 CFR §1.181(a) filed April 25, 2005. The petition asks that the abandonment, as set forth in the Notice of Abandonment of April 04, 2005 for failure to timely file a proper reply to the Office letter mailed on September 28, 2004 be withdrawn since the applicant did timely file a response on March 28, 2005.

DECISION

The instant request has been accepted as a petition to withdraw the holding of abandonment under the provisions of 37 CFR 1.181 (no fee) - no abandonment-in-fact. A review of the USPTO application file reveals that applicant's response, was properly filed on March 28, 2005 in view of the fact that the originally filed papers having a Patent and Trademark Office date stamp of March 28, 2005 thereon have been located in the USPTO application file. Accordingly, any holding of abandonment is hereby vacated, and the application has been returned to pending status.

The application shall be forwarded to the examiner for processing and consideration of the papers filed March 28, 2005.

The Petition is **GRANTED**.

Jacqueline M. Stone

Jacqueline Stone, Director
Technology Center 1700
Chemical and Materials Engineering

Mark G. Sandbaken, Ph.D.
Townsend and Townsend and Crew LLP
Two Embarcadero Center, Eighth Floor
San Francisco, CA 94111-3834

SPE RESPONSE FOR CERTIFICATE OF CORRECTION

Paper No.:20080501

DATE : May 10, 2008

TO SPE OF : ART UNIT 2627

SUBJECT : Request for Certificate of Correction on Patent No.: US 7,298,686 B2

A response is requested with respect to the accompanying request for a certificate of correction.

Please complete this form and return with file, within **7** days to:
Certificates of Correction Branch - PK 3-910
Palm location **7590** - Tel. No. 305-8201

With respect to the change(s) requested, correcting Office and/or Applicant's errors, should the patent read as shown in the certificate of correction? No new matter should be introduced, nor should the scope or meaning of the claims be changed.

Thank You For Your Assistance **Certificates of Correction Branch**

The request for issuing the above-identified correction(s) is hereby:
Note your decision on the appropriate box.

☒ **Approved** **All** changes apply.

☐ **Approved in Part** Specify below which changes **do not** apply.

☐ **Denied** State the reasons for denial below.

Comments:

SPE: /Joseph Feild/ **Art Unit** 2627

UNITED STATES PATENT AND TRADEMARK OFFICE

COMMISSIONER FOR PATENTS
UNITED STATES PATENT AND TRADEMARK OFFICE
P.O. BOX 1450
ALEXANDRIA, VA 22313-1450
www.uspto.gov

THE PROCTER & GAMBLE COMPANY
INTELLECTUAL PROPERTY DIVISION
WINTON HILL TECHNICAL CENTER - BOX 161
6110 CENTER HILL AVENUE
CINCINNATI, OH 45224

COPY MAILED

JUL 1 8 2005

OFFICE OF PETITIONS

In re Application of :
Alan E. Sherry, et al. :
Application No. 10/737,129 : ON PETITION
Filed: December 15, 2003 :
Attorney Docket No. 7803C :

This is a decision on the petition under 37 CFR 1.137(b) to revive the above-identified application, filed May 11, 2005.

The petition is GRANTED.

The application became abandoned for failure to pay the issue fee on or before March 7, 2005. Receipt is acknowledged of the requisite issue/publication fee on May 11 2005.

The application is being referred to Publishing Division.

Telephone inquires related to this decision should be directed to the undersigned at (571) 272-3204. Telephone inquiries related to processing at Publishing Division should be directed to (703) 305-8283.

Sherry D. Brinkley
Petitions Examiner
Office of Petitions
Office of the Deputy Commissioner
for Patent Examination Policy

UNITED STATES PATENT AND TRADEMARK OFFICE

Commissioner for Patents
United States Patent and Trademark Office
P.O. Box 1450
Alexandria, VA 22313-1450
www.uspto.gov

HARRINGTON & SMITH, PC
4 RESEARCH DRIVE
SHELTON CT 06484-6212

COPY MAILED

FEB 2 8 2008

OFFICE OF PETITIONS

In re Application of	:	
Timo Eriksson et al	:	
Application No. 10/737,137	:	DECISION GRANTING PETITION
Filed: December 16, 2003	:	UNDER 37 CFR 1.313(c)(2)
Attorney Docket No. 884A.0029.US (US)	:	

This is a decision on the petition under 37 CFR 1.313(c)(2), filed February 26, 2008, to withdraw the above-identified application from issue after payment of the issue fee.

The petition is **GRANTED**.

The above-identified application is withdrawn from issue for consideration of a submission under 37 CFR 1.114 (request for continued examination). *See* 37 CFR 1.313(c)(2).

Petitioner is advised that the issue fee paid on January 25, 2008 cannot be refunded. If, however, this application is again allowed, petitioner may request that it be applied towards the issue fee required by the new Notice of Allowance.[1]

Telephone inquiries should be directed to the undersigned at (571) 272-3208.

This application is being referred to Technology Center AU 2617 for processing of the request for continued examination under 37 CFR 1.114 and for consideration of the concurrently filed IDS.

Karen Creasy
Petitions Examiner
Office of Petitions

[1] *The request to apply the issue fee to the new Notice may be satisfied by completing and returning the new Part B – Fee(s) Transmittal Form (along with any balance due at the time of submission). Petitioner is advised that the Issue Fee Transmittal Form* ***must*** *be completed and timely submitted to avoid abandonment of the application.*

UNITED STATES PATENT AND TRADEMARK OFFICE

Commissioner for Patents
United States Patent and Trademark Office
P.O. Box 1450
Alexandria, VA 22313-1450
www.uspto.gov

JOHN S. PRATT, ESQ.
KILPATRICK STOCKTON LLP
1100 PEACHTREE STEET
ATLANTA, GA 30309

COPY MAILED

AUG 0 6 2007

OFFICE OF PETITIONS

In re Application of :
YUM, et al. :
Application No. 10/737,144 : DECISION ON PETITION
Filed: December 15, 2003 : TO WITHDRAW
Attorney Docket No. **DURE-050** : FROM RECORD
:

This is a decision on the Request to Withdraw as attorney or agent of record under 37 C.F.R. § 1.36(b), filed March 29, 2007.

The request is **NOT APPROVED** as moot.

A review of the file record indicates that the power of attorney to **KILPATRICK STOCKTON LLP** has been revoked by the assignee of the patent application on June 15, 2007. Accordingly, the request to withdraw under 37 C.F.R. § 1.36(b) is moot.

All future communications from the Office will continue to be directed to the below-listed address until otherwise notified by applicant.

Telephone inquires concerning this decision should be directed to the undersigned at 571-272-7253.

Monica A. Graves
Petitions Examiner
Office of Petitions

cc: **THOMAS P MCCRACKEN**
DURECT CORPORATION
2 RESULTS WAY
CUPERTINO, CA 95014

UNITED STATES PATENT AND TRADEMARK OFFICE

Commissioner for Patents
United States Patent and Trademark Office
P.O. Box 1450
Alexandria, VA 22313-1450
www.uspto.gov

HECTOR M. REYES-RIVERA, PHD JD.
P.O. BOX 190086
HATO REY STATION
SAN JUAN PR 00919

COPY MAILED

MAR 21 2007

OFFICE OF PETITIONS

In re Application of	:	
Michael Bravo-Loubriel	:	
Application No. 10/737,145	:	DECISION GRANTING PETITION
Filed: December 15, 2003	:	UNDER 37 CFR 1.137(b)
Attorney Docket No. None	:	

This is a decision on the petition under 37 CFR 1.137(b), filed November 20, 2006, to revive the above-identified application.

The petition is **GRANTED**.

The petition satisfies the conditions for revival pursuant to the provisions of 37 CFR 1.137(b) in that (1) the reply in the form of Replacement Drawings; (2) the petition fee; and (3) the required statement of unintentional delay have been received. Accordingly, the reply to the Notice of Allowability of July 12, 2006, is accepted as having been unintentionally delayed.

Telephone inquiries concerning this decision should be directed to the undersigned at (571) 272-3208.

This matter is being referred to Patent Publication and for review of the drawings submitted on November 20, 2006.

Karen Creasy

Karen Creasy
Petitions Examiner
Office of Petitions

UNITED STATES PATENT AND TRADEMARK OFFICE

Commissioner for Patents
United States Patent and Trademark Office
P.O. Box 1450
Alexandria, VA 22313-1450
www.uspto.gov

JJGJR.: 08-07

Paper No: __

COPY MAILED

AUG 27 2007

OFFICE OF PETITIONS

IMMUNEX CORPORATION
LAW DEPARTMENT
1201 AMGEN COURT WEST
SEATTLE WA 98119

In re Application of :
Sims :
Application No. 10/737,146 :
Filing Date: 15 December, 2003 :
Attorney Docket No.: 2872-US-DIV3 :

DECISION

This is a decision on the petition filed on 1 December, 2006, seeking to revive the instant application under 37 C.F.R. §1.137(a) as abandoned due to unavoidable delay.

The Office regrets the delay in addressing this matter, however, the instant petition was presented to the attorneys in the Office of Petitions only at this writing.[1]

For the reasons set forth below, the petition as considered under 37 C.F.R. §1.137(a) is **DISMISSED**.

NOTES:

(1) Any petition (and fee) for reconsideration of this decision under 37 C.F.R. §1.137(a) (as to unavoidable delay) or an alternative request for relief under 37

[1] NOTE: Monitoring of the status of applications on PAIR can inform one's management of application responses and provide an indication when mailings of Office actions should be expected. Status Inquiries filed at three (3) or four (4) month intervals provide a demonstration of diligence and attention in supporting a petition seeking relief under 37 C.F.R. §1.181.

C.F.R. §1.137(b)[2] (as to unintentional delay) must be submitted within two (2) months from the mail date of this decision. Extensions of time under 37 C.F.R. §1.136(a) are permitted. The reconsideration request should include a cover letter entitled "Renewed Petition under 37 C.F.R. §1.137(a)"; and/or "Petition under 37 C.F.R. §1.137(b)";

(2) Thereafter, there will be no further reconsideration of this matter.

BACKGROUND

The record reflects that:

- Petitioner failed to reply timely and properly to the Restriction Requirement mailed on 13 March, 2006, with reply due absent extension of time on or before 13 May, 2006;
- the instant application went abandoned by operation of law after midnight 13 May, 2006;
- 10 April, 2006, Petitioner filed a Revocation/Power of Attorney;
- on 24 April, 2006, the Restriction requirement was returned to the Office by the U.S. Postal Service (USPS) as undeliverable–apparently Petitioner changed address without prior Notice to the Office;
- on 22 November, 2006, the Office mailed the Notice of Abandonment;
- on 1 December, 2006, Petitioner filed, *inter alia*, the instant petition with fee, a reply in the form an Election, and a statement averring unavoidable delay, however, Petitioner failed to detail the basis of the averment and submit documentation in support of his averment (see: MPEP §711.03(c) and otherwise to satisfy the showing requirement under the regulation.

Out of an abundance of caution, Petitioners always are reminded that those registered to practice

---

[2] Effective December 1, 1997, the provisions of 37 C.F.R. §1.137(b) now provide that where the delay in reply was unintentional, a petition may be filed to revive an abandoned application or a lapsed patent pursuant to 37 C.F.R. §1.137(b). a grantable petition filed under the provisions of 37 C.F.R. §1.137(b) must be accompanied by:

(1) the required reply, unless previously filed. In a nonprovisional application abandoned for failure to prosecute, the required reply may be met by the filing of a continuing application. In an application or patent, abandoned or lapsed for failure to pay the issue fee or any portion thereof, the required reply must be the payment of the issue fee or any outstanding balance thereof.

(2) the petition fee as set forth in 37 C.F.R. §1.17(m);

(3) a statement that the entire delay in filing the required reply from the due date for the reply until the filing of a grantable petition pursuant to 37 C.F.R. §1.137(b) was unintentional. The Commissioner may require additional information where there is a question whether the delay was unintentional; and

(4) any terminal disclaimer (and fee set forth in 37 C.F.R. §1.20(d)) required pursuant to 37 C.F.R. §1.137(c). (Emphasis supplied.)

and all others who make representations before the Office are reminded to inquire into the underlying facts of representations made to the Office and support averments with the appropriate documentation–since all owe to the Office the continuing duty to disclose.[3]

STATUTES, REGULATIONS AND ANALYSIS

Congress has authorized the Commissioner to "revive an application if the delay is shown to the

---

[3] See supplement of 17 June, 1999. The Patent and Trademark Office is relying on petitioner's duty of candor and good faith and accepting a statement made by Petitioner. See Changes to Patent Practice and Procedure, 62 Fed. Reg. at 53160 and 53178, 1203 Off. Gaz. Pat. Office at 88 and 103 (responses to comments 64 and 109)(applicant obligated under 37 C.F.R. §10.18 to inquire into the underlying facts and circumstances when providing statements to the Patent and Trademark Office).

Specifically, the regulations at 37 C.F.R. §10.18 provide:

§ 10.18 Signature and certificate for correspondence filed in the Patent and Trademark Office.
(a) For all documents filed in the Office in patent, trademark, and other non-patent matters, except for correspondence that is required to be signed by the applicant or party, each piece of correspondence filed by a practitioner in the Patent and Trademark Office must bear a signature by such practitioner complying with the provisions of §1.4(d), §1.4(e), or § 2.193(c)(1) of this chapter.
(b) By presenting to the Office (whether by signing, filing, submitting, or later advocating) any paper, the party presenting such paper, whether a practitioner or non-practitioner, is certifying that—

(1) All statements made therein of the party's own knowledge are true, all statements made therein on information and belief are believed to be true, and all statements made therein are made with the knowledge that whoever, in any matter within the jurisdiction of the Patent and Trademark Office, knowingly and willfully falsifies, conceals, or covers up by any trick, scheme, or device a material fact, or makes any false, fictitious or fraudulent statements or representations, or makes or uses any false writing or document knowing the same to contain any false, fictitious or fraudulent statement or entry, shall be subject to the penalties set forth under 18 U.S.C. 1001, and that violations of this paragraph may jeopardize the validity of the application or document, or the validity or enforceability of any patent, trademark registration, or certificate resulting therefrom; and

(2) To the best of the party's knowledge, information and belief, formed after an inquiry reasonable under the circumstances, that —

(i) The paper is not being presented for any improper purpose, such as to harass someone or to cause unnecessary delay or needless increase in the cost of prosecution before the Office;

(ii) The claims and other legal contentions therein are warranted by existing law or by a nonfrivolous argument for the extension, modification, or reversal of existing law or the establishment of new law;

(iii) The allegations and other factual contentions have evidentiary support or, if specifically so identified, are likely to have evidentiary support after a reasonable opportunity for further investigation or discovery; and

(iv) The denials of factual contentions are warranted on the evidence, or if specifically so identified, are reasonably based on a lack of information or belief.

(c) Violations of paragraph (b)(1) of this section by a practitioner or non-practitioner may jeopardize the validity of the application or document, or the validity or enforceability of any patent, trademark registration, or certificate resulting therefrom. Violations of any of paragraphs (b)(2)(i) through (iv) of this section are, after notice and reasonable opportunity to respond, subject to such sanctions as deemed appropriate by the Commissioner, or the Commissioner's designee, which may include, but are not limited to, any combination of —

(1) Holding certain facts to have been established;
(2) Returning papers;
(3) Precluding a party from filing a paper, or presenting or contesting an issue;
(4) Imposing a monetary sanction;
(5) Requiring a terminal disclaimer for the period of the delay; or
(6) Terminating the proceedings in the Patent and Trademark Office.

(d) Any practitioner violating the provisions of this section may also be subject to disciplinary action. See § 10.23(c)(15).
[Added 50 FR 5175, Feb. 6, 1985, effective Mar. 8, 1985; para. (a) revised, 58 FR 54494, Oct. 22, 1993, effective Nov. 22, 1993; paras. (a) & (b) revised, paras. (c) & (d) added, 62 FR 53131, Oct. 10, 1997, effective Dec. 1, 1997; para. (a) revised, 69 FR 56481, Sept. 21, 2004, effective Oct. 21, 2004]

satisfaction of the Commissioner to have been "unavoidable." 35 U.S.C. §133 (1994).[4]

The regulations at 37 C.F.R. §1.137(a) and (b) set forth the requirements for a petitioner to revive a previously unavoidably or unintentionally, respectively, abandoned application under this congressional grant of authority. The language of 35 U.S.C. §133 and 37 C.F.R. §1.137(a) is clear, unambiguous, and without qualification: the delay in tendering the reply to the outstanding Office action, as well as filing the first petition seeking revival, must have been unavoidable for the reply now to be accepted on petition.[5]

Delays in responding properly raise the question whether delays are unavoidable.[6] Where there is a question whether the delay was unavoidable, Petitioners must meet the burden of establishing that the delay was unavoidable within the meaning of 35 U.S.C. §133 and 37 C.F.R. §1.137(a).[7] And the Petitioner must be diligent in attending to the matter.[8] Failure to do so does not constitute the care required under Pratt, and so cannot satisfy the test for diligence and due care.

(By contrast, unintentional delays are those that do not satisfy the very strict statutory and regulatory requirements of unavoidable delay, and also, by definition, are not intentional.[9]))

As to Allegations
of Unavoidable Delay

The requirements for a grantable petition under 37 C.F.R. §1.137(a) are the petition and fee, a showing of unavoidable delay, a proper reply, and–where appropriate--a terminal disclaimer and fee.

---

[4] 35 U.S.C. §133 provides:
35 U.S.C. §133 Time for prosecuting application.
Upon failure of the applicant to prosecute the application within six months after any action therein, of which notice has been given or mailed to the applicant, or within such shorter time, not less than thirty days, as fixed by the Commissioner in such action, the application shall be regarded as abandoned by the parties thereto, unless it be shown to the satisfaction of the Commissioner that such delay was unavoidable.

[5] Therefore, by example, an unavoidable delay in the payment of the Filing Fee might occur if a reply is shipped by the US Postal Service, but due to catastrophic accident, the delivery is not made.

[6] See: *Changes to Patent Practice and Procedure*; *Final Rule Notice*, 62 *Fed. Reg.* at 53158-59 (October 10, 1997), 1203 *Off. Gaz. Pat. Office* at 86-87 (October 21, 1997).

[7] See: In re Application of G, 11 USPQ2d 1378, 1380 (Comm'r Pats. 1989).

[8] See: Diligence in Filing Petitions to Revive and Petitions to Withdraw the Holding of Abandonment, 1124 Off. Gaz. Pat. Office 33 (March 19, 1991). It was and is Petitioner's burden to exercise diligence in seeking either to have the holding of abandonment withdrawn or the application revived. See 1124 Off. Gaz. Pat. Office supra.

[9] Therefore, by example, an unintentional delay in the reply might occur if the reply and transmittal form are to be prepared for shipment by the US Postal Service, but other pressing matters distract one's attention and the mail is not timely deposited for shipment.

Petitioner has failed to satisfy the "showing" requirement of the regulation.

CONCLUSION

The instant petition under 37 C.F.R. §1.137(a) is **dismissed**.

ALTERNATIVE VENUE

It appears that Petitioner will be unable to make a showing of unavoidable delay. Petitioner's only alternative to irretrievable abandonment is to file a petition under 37 C.F.R. §1.137(b) (state therein that "the entire delay in filing the required reply from the due date for the reply until the filing of a grantable petition pursuant to 37 C.F.R. §1.137(b) was unintentional").

Petitioner may wish to refer to the guidance (as to revival of abandoned applications) found at the Office website at http://www.uspto.gov/web/offices/pac/dapp/petitionspractice.html#lapse and/or review the guidance at http://www.uspto.gov/web/offices/pac/mpep/documents/0700_711_03_c.htm#sect711.03c

Thus, Petitioner may wish to supplement the petition to plead alternatively under 37 C.F.R. §1.137(b) wherein the "showing" burden is much less onerous.

Further correspondence with respect to this matter should be addressed as follows:[10]

By mail: Commissioner for Patents[11]
P.O. Box 1450
Alexandria, VA 22313-1450

By FAX: IFW Formal Filings
(571) 273-8300
ATTN.: Office of Petitions

[10] On July 15, 2005, the Central Facsimile (FAX) Number was changed to (571) 273-8300, which is the only facsimile number recognized for entralized delivery. (For further information. see: http://www.uspto.gov/web/offices/pac/dapp/opla/preognotice/cfax062005.pdf .)

[11] To determine the appropriate addresses for other subject-specific correspondence, refer to the USPTO Web site at www.uspto.gov.

By hand: Mail Stop: Petition
Customer Service Window
Randolph Building
401 Dulany Street
Alexandria, VA 22314

While telephone inquiries regarding this decision may be directed to the undersigned at (571) 272-3214, it is noted that all practice before the Office is in writing (see: 37 C.F.R. §1.2[12]) and the proper authority for action on any matter in this regard are the statutes (35 U.S.C.), regulations (37 C.F.R.) and the commentary on policy (MPEP). Therefore, no telephone discussion may be controlling or considered authority for Petitioner's action(s).

John J. Gillon, Jr.
Senior Attorney
Office of Petitions

[12] The regulations at 37 C.F.R. §1.2 provide:

§1.2 Business to be transacted in writing.

All business with the Patent and Trademark Office should be transacted in writing.The personal attendance of applicants or their attorneys or agents at the Patent and Trademark Office is unnecessary. The action of the Patent and Trademark Office will be based exclusively on the written record in the Office. No attention will be paid to any alleged oral promise, stipulation,or understanding in relation to which there is disagreement or doubt.

UNITED STATES PATENT AND TRADEMARK OFFICE

UNITED STATES DEPARTMENT OF COMMERCE
United States Patent and Trademark Office
Address: COMMISSIONER FOR PATENTS
P.O. Box 1450
Alexandria, Virginia 22313-1450
www.uspto.gov

PHILIP S. JOHNSON
JOHNSON & JOHNSON
ONE JOHNSON & JOHNSON PLAZA
NEW BRUNSWICK, NJ 08933-7003

Mail Date: 04/20/2010

Applicant	: David McCord	: DECISION ON REQUEST FOR
Patent Number	: 7648506	: RECALCULATION of PATENT
Issue Date	: 01/19/2010	: TERM ADJUSTMENT IN VIEW
Appliction No	: 10/737,166	: OF WYETH AND NOTICE OF INTENT TO
Filed	: 12/16/2003	: ISSUE CERTIFICATE OF CORRECTION
		:

The Request for Recalculation is **GRANTED** to the extent indicated.

The patent term adjustment has been determined to be **1400** days. The USPTO will *sua sponte* issue a certificate of correction reflecting the amount of PTA days determined by the recalculation.

Prior to the issuance of the certificate of correction, the USPTO will afford patentee an opportunity to be heard and request reconsideration. Accordingly, patentee has **one month or thirty (30) days**, whichever is longer, to file a request for reconsideration of this patent term adjustment calculation. See 35 U.S.C. 154(b)(3)(B)(ii) and 37 CFR 1.322(a)(4). No extensions of time will be granted under 37 CFR 1.136.

Patentee should use document code PET.OP if electronically filing a request for reconsideration of this patent term adjustment calculation. The patentee must also include the information required by 37 CFR 1.705(b)(2) and the fee required by 37 CFR 1.18(e). If patentee does not file a timely request for reconsideration of this patent term adjustment calculation including the information required by 37 CFR 1.705(b)(2) and the fee required by 37 CFR 1.18(e), the USPTO will issue a certificate of correction reflecting the PTA determination noted above.

Patentee should be aware that in order to preserve the right to review in the United States District Court for the District of Columbia of the USPTO patent term adjustment determination, patentee must ensure that he or she also take the steps required under 35 U.S.C. 154(b)(4)(A) in a timely manner. Nothing in the request for recalculation should be construed as providing an alternative time frame for commencing a civil action under 35 U.S.C. 154(b)(4)(A).

Any questions concerning this decision should be directed to the Office of Patent Legal Administration at 571-272-7702.

SPE RESPONSE FOR CERTIFICATE OF CORRECTION

Paper No.: _____

DATE : 3/16/07

TO SPE OF : ART UNIT 2814

SUBJECT : Request for Certificate of Correction on Patent No.: 7045811

A response is requested with respect to the accompanying request for a certificate of correction.

Please complete this form and return with file, within **7** days to:
Palm location **7580, Certificates of Correction Branch – South Tower – 9A22**
If response is for an IFW, **return to employee (named below) via PUBSCofC Team in MADRAS.**
With respect to the change(s) requested, correcting Office and/or Applicant's errors, should the patent read as shown in the certificate of correction (COCIN)? No new matter should be introduced, nor should the scope or meaning of the claims be changed.

Valerie Jackson

Thank You For Your Assistance

Certificates of Correction Branch
Tel. No. 703-308-9390 ext. 114

The request for issuing the above-identified correction(s) is hereby:
Note your decision on the appropriate box.

☐ **Approved**	**All** changes apply.
☐ **Approved in Part**	Specify below which changes **do not** apply.
☐ **Denied**	State the reasons for denial below.

Comments:

_____

_____

_____

_____

_____

SPE

2814
Art Unit

SPE RESPONSE FOR CERTIFICATE OF CORRECTION

Paper No.: _____

DATE : 3/16/07

TO SPE OF : ART UNIT 2814

SUBJECT : Request for Certificate of Correction on Patent No.: 7045811

A response is requested with respect to the accompanying request for a certificate of correction.

Please complete this form and return with file, within 7 days to:
Palm location **7580, Certificates of Correction Branch – South Tower – 9A22**
If response is for an IFW, **return to employee (named below) via PUBSCofC Team in MADRAS.**
With respect to the change(s) requested, correcting Office and/or Applicant's errors, should the patent read as shown in the certificate of correction (COCIN)? No new matter should be introduced, nor should the scope or meaning of the claims be changed.

Valerie Jackson

Thank You For Your Assistance

Certificates of Correction Branch
Tel. No. 703-308-9390 ext. 114

The request for issuing the above-identified correction(s) is hereby:
Note your decision on the appropriate box.

- ☒ **Approved** — **All** changes apply.
- ☐ **Approved in Part** — Specify below which changes **do not** apply.
- ☐ **Denied** — State the reasons for denial below.

Comments:

_____

_____

_____

_____

_____

SPE

2814
Art Unit

UNITED STATES PATENT AND TRADEMARK OFFICE

Commissioner for Patents
United States Patent and Trademark Office
P.O. Box 1450
Alexandria, VA 22313-1450
www.uspto.gov

WARE FRESSOLA VAN DER SLUYS & ADOLPHSON, LLP
BRADFORD GREEN, BUILDING 5
755 MAIN STREET, P O BOX 224
MONROE CT 06468

COPY MAILED

JUN 16 2009

OFFICE OF PETITIONS

In re Application of	:	
Kurceren et al.	:	
Application No. 10/737184	:	
Filing or 371(c) Date: 12/16/2003	:	
Attorney Docket Number:	:	
944-001.121	:	ON PETITION

This is a decision on the "Petition to Withdraw Holding of Abandonment (37 CFR 1.181)," filed May 6, 2009.

This Petition is hereby granted.

The above-identified application became abandoned for failure to timely and properly reply to the non-final Office action, mailed October 30, 2008. The Office action set a three (3) month period for reply. No response having been received, the application became abandoned on January 31, 2009. A Notice of Abandonment was mailed May 12, 2009.

With the present petition, Applicant has demonstrated non-receipt of the Office Action by a preponderance of the evidence.

In view of the foregoing, the petition is granted. The holding of abandonment is hereby withdrawn.

No petition fee has been charged and none is due.

The application will be referred to Technology Center Art Unit 2621 for re-mailing of the Office action and re-setting the period for reply.

Telephone inquiries concerning this matter should be directed to the undersigned at (571) 272-3232.

/Derek L. Woods/
Derek L. Woods
Attorney
Office of Petitions

UNITED STATES PATENT AND TRADEMARK OFFICE

Commissioner for Patents
United States Patent and Trademark Office
Washington, D.C. 20231
www.uspto.gov

OIPE
APR 22 2004
PATENT & TRADEMARK OFFICE
JC60

Paper No. 6

Jacqueline E. Hartt
Allen, Dyer, Doppelt, Milbrath & Gilchrist, P.A.
255 South Orange Avenue, Suite 1401
P. O. Box 3791
Orlando, FL 32802-3791

COPY MAILED

FEB 07 2003

OFFICE OF PETITIONS

In re Application of :
Laura Leyva, et al. :
Application No. 10/123,037 : ON PETITION
Filed: April 15, 2002 :
Attorney Docket No. 24139 :

This is a decision on the petition under 37 CFR 1.47(a), filed November 29, 2002.

The petition is granted.

Petitioner has shown that the non-signing inventor has refused to join in the filing of the above-identified application.

The above-identified application and papers have been reviewed and found in compliance with 37 CFR 1.47(a). This application is hereby accorded Rule 1.47(a) status.

As provided in 37 CFR 1.47(a), this Office will forward notice of this application's filing to the non-signing inventor at the address given in the oath or declaration which is presumed to be the last known address of the non-signing inventor. Notice of the filing of this application will also be published in the Official Gazette.

The application file is being forwarded to the Office of Initial Patent Examination.

Telephone inquiries regarding this decision should be directed to Marianne Morgan at (703) 306-3475.

Frances Hicks

Frances M. Hicks
Lead Petitions Examiner
Office of Petitions
Office of the Deputy Commissioner
for Patent Examination Policy

RECEIVED
FEB 11 2003
A.D.D.M.G.

UNITED STATES PATENT AND TRADEMARK OFFICE

Commissioner for Patents
United States Patent and Trademark Office
Washington, D.C. 20231
www.uspto.gov

OIPE
APR 22 2004
PATENT & TRADEMARK OFFICE 2600

Ms. Laura Leyva
11710 Parliament #2104
San Antonio, TX 78213

COPY MAILED

FEB 07 2003

OFFICE OF PETITIONS

In re Application of
Laura Leyva and David Tulsky
Application No. 10/123,037
Filed: April 15, 2002
For: SEQUENTIAL REASONING TESTING SYSTEM AND METHOD

Dear Ms. Leyva:

You are named as a joint inventor in the above-identified United States patent application, filed under the provisions of 35 U.S.C. 116 (United States Code), and 37 CFR 1.47(a), Rules of Practice in Patent Cases. Should a patent be granted on the application you will be designated therein as a joint inventor.

As a named inventor you are entitled to inspect any paper in the file wrapper of the application, order copies of all or any part thereof (at a prepaid cost per 37 CFR 1.19) or make your position of record in the application. Alternatively, you may arrange to do any of the preceding through a registered patent attorney or agent presenting written authorization from you. If you care to join the application, counsel of record (see below) would presumably assist you. Joining the application would entail the filing of an appropriate oath or declaration by you pursuant to 37 CFR 1.63.

Telephone inquiries regarding this communication should be directed to Marianne Morgan at (703) 306-3475. Requests for information regarding your application should be directed to the File Information Unit at (703) 308-2733. Information regarding how to pay for and order a copy of the application, or a specific paper in the application, should be directed to the Certification Division at (703) 308-9726 or 1 (800) 972-6382 (outside the Washington, DC area).

Frances Hicks

Frances M. Hicks
Lead Petitions Examiner
Office of Petitions
Office of the Deputy Commissioner
for Patent Examination Policy

cc: Jacqueline E. Hartt, Ph.D.
Allen, Dyer, Doppelt, Milbrath & Gilchrist, P.A.
255 S. Orange Avenue, Suite 1401
P. O. Box 3791
Orlando, FL 32802

UNITED STATES PATENT AND TRADEMARK OFFICE

Commissioner for Patents
United States Patent and Trademark Office
P.O. Box 1450
Alexandria, VA 22313-1450
www.uspto.gov

MARK BARRISH
TOWNSEND AND TOWNSEND AND CREW
379 LYTTON AVE
PALO ALTO, CA 94301

COPY MAILED
APR 19 2006
OFFICE OF PETITIONS

In re Application of :
Yulun Yang et al :
Application No. 10/737,195 : DECISION ON PETITION
Filed: December 15, 2003 : TO WITHDRAW
Attorney Docket No. 022001-000843US : FROM RECORD
:

This is a decision on the Request to Withdraw as attorney or agent of record under 37 C.F.R. § 1.36(b), filed June 27, 2005.

The request is **NOT APPROVED**.

A review of the file record indicates that Mark D. Barrish does not have power of attorney in this patent application. Accordingly, the request to withdraw under 37 C.F.R. § 1.36(b) is not applicable.

All future communications from the Office will continue to be directed to the above-listed address until otherwise notified by applicant.

Telephone inquires concerning this decision should be directed to Irvin Dingle at 571-272- 3210.

David Bucci
Petitions Examiner
Office of Petitions

cc: Frank Nguyen
Intuitive Surgical, Inc.
950 Kifer Road
Sunnyvale, CA 94086

United States
Patent And
Trademark Office

P.O. Box 1450, Alexandria, Virginia 22313-1450 – www.uspto.gov

PETITION DECISION

03/19/04

James Thompson
Weingarten, Schurgin, Gagnebin, & Lebovici LLP
Ten Post Office Square
Boston, MA 02109

Dear Applicant:

The Box PG Pub replacement drawings for application number 10/737199 received on 03/08/04 by the U. S. Patent and Trademark Office will be included for patent publication.

Telephone inquiries should be directed to Kaletus King, Office of Pre-Grant Publication 703 605-4283.

Kaletus King

Signature of Reviewer, Office of Pre-Grant Publication

UNITED STATES PATENT AND TRADEMARK OFFICE

Commissioner for Patents
United States Patent and Trademark Office
P.O. Box 1450
Alexandria, VA 22313-1450
www.uspto.gov

CAVEN & AGHEVLI LLC
9249 S. BROADWAY BLVD
UNIT 200-201
HIGHLANDS RANCH CO 80129

COPY MAILED

DEC 0 8 2008

In re Application of :

DISPENSA, Steve et al. :
Application No. 10/737,200 : DECISION ON PETITION
Filed: December 15, 2003 : TO WITHDRAW
Attorney Docket No. **PN1-001US** : FROM RECORD
:

This is a decision on the Request to Withdraw as attorney or agent of record under 37 C.F.R. § 1.36(b), filed October 16, 2008.

The request is **APPROVED**.

A grantable request to withdraw as attorney/agent of record must be signed by every attorney/agent seeking to withdraw or contain a clear indication that one attorney is signing on behalf of another/others. The Office requires the practitioner(s) requesting withdrawal to certify that he, she, or they have: (1) given reasonable notice to the client, prior to the expiration of the response period, that the practitioner(s) intends to withdraw from employment; (2) delivered to the client or a duly authorized representative of the client all papers and property (including funds) to which the client is entitled; and (3) notified the client of any responses that may be due and the time frame within which the client must respond, pursuant 37 CFR 10.40(c).

The request was signed by Jed W. Caven on behalf of all attorneys of record. All attorneys/agents associated have been withdrawn. Applicant is reminded that there is no attorney of record at this time.

The request to change the correspondence address of record is not acceptable as the requested correspondence address is not that of: (1) the first named signing inventor; or (2) an intervening assignee of the entire interest under 37 C.F.R 3.71. All future communications from the Office will be directed to the first named signing inventor.

Telephone inquiries concerning this decision should be directed to Michelle R. Eason at 571-272-4231.

Michelle R. Eason
Paralegal Specialist
Office of Petitions

cc: **STEVE DISPENSA**
3329 W. 145TH STREET
LEAWOOD, KS 66224

cc: **BANNER & WITCOFF, LTD.**
1100 13TH STREET, N.W.
SUITE 1200
WASHINGTON, DC 20005-4051

UNITED STATES PATENT AND TRADEMARK OFFICE

Commissioner for Patents
United States Patent and Trademark Office
P.O. Box 1450
Alexandria, VA 22313-1450
www.uspto.gov

COPY MAILED

MAR 10 2006

OFFICE OF PETITIONS

GENERAL ELECTRIC COMPANY (PCPI)
C/O FLETCHER YODER
P. O. BOX 692289
HOUSTON, TX 77269-2289

In re Application of :
Baumgartner, et al. :
Application No. 10/737,216 : ON PETITION
Filed: December 15, 2003 :
Attorney Docket No. 132131-1

This is a decision on the "Petition to Reset a Period for Reply Due to Late Receipt of and Office Action under MPEP 710.06", filed on November 18, 2005. The petition will treated under 37 CFR 1.181.

The petition is **DISMISSED**.

The record reflects that on May 2, 2005, a "Revocation of Power of Attorney and Change of Correspondence Address" was filed. It does not appear that the revocation was entered at that time, however. A final rejection was mailed in the application on August 12, 2005, allowing a shortened statutory period for reply of three months from its mailing date; it was mailed to the previous attorney of record. The final rejection was returned to the USPTO on September 1, 2005, as 'undeliverable'. The "Revocation of Power of Attorney and Change of Correspondence Address" was filed again on November 3, 2005, and entered into the record. Petitioner files the subject petition requesting that the period for response to the final Office action be reset because the attorney of record received the final Office action late due to the Office's mailing error.

While the USPTO failure to timely enter the "Revocation of Power of Attorney and Change of Correspondence Address" resulting in the mailing error is noted, the response to the final Office action was still received within the shortened statutory period set for reply. The amendment that is responsive to the final Office action was received on November 18, 2005, with a certificate of mailing dated November 14, 2005. As petitioner managed to file a timely response to the final Office action, despite the USPTO mailing error, the resetting of time period for the filing a response to the final Office action would be of little consequence and would likely further delay the prosecution of the application. The petition is dismissed, accordingly.

The application file is being directed to Technology Center 2800, GAU 2834 for further processing.

Telephone inquiries concerning this decision may be directed to the undersigned at (571) 272-3222.

Kenya A. McLaughlin
Petitions Attorney
Office of Petitions

UNITED STATES PATENT AND TRADEMARK OFFICE

Commissioner for Patents
United States Patent and Trademark Office
P.O. Box 1450
Alexandria, VA 22313-1450
www.uspto.gov

MAR 22 2006

GENERAL ELECTRIC COMPANY (PCPI)
C/O FLETCHER YODER
P. O. Box 692289
Houston, TX 77269-2289

In re Application of:
BAUMGARTNER *et al.*
Serial No.: 10/737,216
Filed: December 15, 2003
Attorney Docket No.: **132131-1**

DECISION ON PETITION
TO RESET A PERIOD
FOR REPLY

This is a decision on the petition filed November 18, 2005, to reset a period for reply due to a late receipt of an office action. No fee is required.

The petition is **GRANTED.**

Petitioner asserts that the Office action mailed on August 12, 2005, was not received. Petitioner further asserts that a Revocation of Power of Attorney and Change of Address was filed with the USPTO on April 26, 2005.

A review of the written record indicates that the Office action mailed on August 12, 2005, was sent to an old address, and was returned to the Office on September 01, 2005. There does not appear to be any attempt to re-mail the Office action to a correct address pursuant to M.P.E.P. 707.13. As such, it is clear that the applicant did not receive the original Office action mailed on August 12, 2005.

For the above stated reason, the petition is **granted**. The shortened statutory period for response set therein will be reset to run three months from November 18, 2005, the date the petition was filed in the USPTO. Extensions of time are available under 37 C.F.R. § 1.136. The response filed with the petition is accepted as timely.

Inquiries regarding this decision should be directed to Clayton E. LaBalle at (571) 272-1594.

Richard K. Seidel, Director
Technology Center 2800
Semiconductors, Electrical and Optical
Systems and Components

UNITED STATES PATENT AND TRADEMARK OFFICE

Commissioner for Patents
United States Patent and Trademark Office
P.O. Box 1450
Alexandria, VA 22313-1450
www.uspto.gov

Fish & Neave IP Group of
Ropes & Gray LLP
One International Place
Boston MA 02110

MAILED

MAR 25 2010

OFFICE OF PETITIONS

In re Patent No. 7,414,111 :
Maruyama et al. : DECISION UPON REMAND AND
Issue Date: August 19, 2008 : RECONSIDERATION OF
Application No. 10/737,252 : PATENT TERM ADJUSTMENT
Filed: December 15, 2003 : AND NOTICE OF INTENT
Attorney Docket No. ALXN -PO2-077 : TO ISSUE CERTIFICATE OF CORRECTION
Title: ENGINEERED TEMPLATES AND THEIR USE IN SINGLE PRIMER AMPLIFICATION :

This is a decision following remand from the District Court for the District of Columbia regarding the patent term adjustment indicated on the above-identified patent. The Court remanded this matter to the U.S. Patent and Trademark Office for recalculation of the patent term adjustment in accordance with the decision in Wyeth & Elan Pharma Int'l Ltd. v. Kappos, 591 F.3d 1364 (Fed. Cir. 2010).

The patent term adjustment indicated on the above-identified patent has been recalculated as directed by the Court. The term of the above-identified patent is extended or adjusted by eight hundred and fifteen (815) days.

The application is being forwarded to the Certificates Branch for issuance of a certificate of correction indicating that the term of the above-identified patent is extended or adjusted by eight hundred and eleven (815) days.

Telephone inquiries specific to this matter should be directed to Senior Legal Advisor, Kery A. Fries at (571) 272-7757.

/Kery A. Fries/

Kery A. Fries
Senior Legal Advisor Attorney
Office of Patent Legal Administration
Office of Associate Commissioner
For Patent Examination Policy

Enclosure: Copy of DRAFT Certificate of Correction

UNITED STATES PATENT AND TRADEMARK OFFICE

CERTIFICATE OF CORRECTION

PATENT : 7,414,111 B2

DATED : **August 19, 2008** **DRAFT**

INVENTOR(S) : Maruyama et al.

It is certified that error appears in the above-identified patent and that said Letters Patent is hereby corrected as shown below:

On the cover page,

[*] Notice: Subject to any disclaimer, the term of this patent is extended or adjusted under 35 USC 154(b) by 549 days

Delete the phrase "by 549 days" and insert – by 815 days--

Day : Tuesday
Date: 3/23/2010

PALM INTRANET

Time: 17:42:20

PTA Calculations for Application: 10/737252			
Application Filing Date:	12/15/2003	PTO Delay (PTO):	613
Issue Date of Patent:	08/19/2008	Three Years:	0
Pre-Issue Petitions:	0	Applicant Delay (APPL):	64
Post-Issue Petitions:	0	Total PTA (days):	815
PTO Delay Adjustment:	266		

File Contents History

Number	Date	Contents Description	PTO	APPL	START
99	03/23/2010	ADJUSTMENT OF PTA CALCULATION BY PTO	266		
85.5	07/30/2008	PTA 36 MONTHS	54		
85	08/19/2008	PATENT ISSUE DATE USED IN PTA CALCULATION	66		76
84	07/22/2008	EXPORT TO FINAL DATA CAPTURE			
83	07/21/2008	FINISHED INITIAL DATA CAPTURE			
82	07/21/2008	DISPATCH TO FDC			
81	07/07/2008	APPLICATION IS CONSIDERED READY FOR ISSUE			
80	07/07/2008	WORKFLOW - QUERY REQUEST - FINISH			
79	05/12/2008	MAIL MISCELLANEOUS COMMUNICATION TO APPLICANT			
78	04/28/2008	MISCELLANEOUS COMMUNICATION TO APPLICANT - NO ACTION COUNT			
76	02/14/2008	ISSUE FEE PAYMENT VERIFIED		1	68
75	02/14/2008	ISSUE FEE PAYMENT RECEIVED			
74	12/18/2007	PUBS CASE REMAND TO TC			
73	12/21/2007	WORKFLOW - QUERY REQUEST - BEGIN			
72	11/30/2007	WORKFLOW - REQUEST FOR RCE - FINISH			
71	11/25/2007	SEQUENCE FORWARDED TO PUBS ON TAPE			
70	11/16/2007	EXPORT TO INITIAL DATA CAPTURE			
68	11/13/2007	MAIL NOTICE OF ALLOWANCE			
67	11/02/2007	ISSUE REVISION COMPLETED			
66	11/02/2007	DOCUMENT VERIFICATION			
65	11/02/2007	NOTICE OF ALLOWANCE DATA VERIFICATION COMPLETED			
64	11/02/2007	CASE DOCKETED TO EXAMINER IN GAU			

63	11/01/2007	WORKFLOW - REQUEST FOR RCE - BEGIN			
62	10/15/2007	NOTICE OF ALLOWABILITY			
61	10/04/2007	DATE FORWARDED TO EXAMINER			
60	09/28/2007	AMENDMENT AFTER FINAL REJECTION		29	54
59	09/28/2007	REQUEST FOR EXTENSION OF TIME - GRANTED			
58	09/17/2007	MAIL ADVISORY ACTION (PTOL - 303)			
57	09/13/2007	ADVISORY ACTION (PTOL-303)			
56	08/28/2007	DATE FORWARDED TO EXAMINER			
55	08/24/2007	AMENDMENT AFTER FINAL REJECTION			
54	05/30/2007	MAIL FINAL REJECTION (PTOL - 326)			
53	05/24/2007	FINAL REJECTION			
52	03/13/2007	DATE FORWARDED TO EXAMINER			
51	02/15/2007	RESPONSE AFTER NON-FINAL ACTION		34	48
50	02/15/2007	REQUEST FOR EXTENSION OF TIME - GRANTED			
48	10/12/2006	MAIL NON-FINAL REJECTION			
47	10/03/2006	NON-FINAL REJECTION			
46	04/21/2006	INFORMATION DISCLOSURE STATEMENT CONSIDERED			
45	07/13/2006	INFORMATION DISCLOSURE STATEMENT CONSIDERED			
44	08/15/2006	CASE DOCKETED TO EXAMINER IN GAU			
43	07/27/2006	AFFIDAVIT(S) (RULE 131 OR 132) OR EXHIBIT(S) RECEIVED			
42	08/09/2006	DATE FORWARDED TO EXAMINER			
41	07/27/2006	RESPONSE TO ELECTION / RESTRICTION FILED			
40.7	07/13/2006	INFORMATION DISCLOSURE STATEMENT (IDS) FILED			
40	07/13/2006	INFORMATION DISCLOSURE STATEMENT (IDS) FILED			
39	06/23/2006	MAIL RESTRICTION REQUIREMENT	493		-1
38	06/22/2006	REQUIREMENT FOR RESTRICTION / ELECTION			
37	05/31/2006	CASE DOCKETED TO EXAMINER IN GAU			
36	05/30/2006	CASE DOCKETED TO EXAMINER IN GAU			
35	05/11/2006	CASE DOCKETED TO EXAMINER IN GAU			
34	04/21/2006	REFERENCE CAPTURE ON IDS			
33.7	04/21/2006	INFORMATION DISCLOSURE STATEMENT (IDS) FILED			

33	04/21/2006	INFORMATION DISCLOSURE STATEMENT (IDS) FILED			
32	03/30/2006	CASE DOCKETED TO EXAMINER IN GAU			
31	11/07/2005	CORRESPONDENCE ADDRESS CHANGE			
30	11/07/2005	CHANGE IN POWER OF ATTORNEY (MAY INCLUDE ASSOCIATE POA)			
29	01/14/2005	CASE DOCKETED TO EXAMINER IN GAU			
28	11/19/2004	CASE DOCKETED TO EXAMINER IN GAU			
26	10/18/2004	IFW TSS PROCESSING BY TECH CENTER COMPLETE			
25	09/21/2004	REFERENCE CAPTURE ON IDS			
24.7	09/21/2004	INFORMATION DISCLOSURE STATEMENT (IDS) FILED			
24	09/21/2004	INFORMATION DISCLOSURE STATEMENT (IDS) FILED			
23	06/01/2004	APPLICATION RETURN FROM OIPE			
22	06/01/2004	APPLICATION RETURN TO OIPE			
21	06/01/2004	APPLICATION RETURN FROM OIPE			
20	06/01/2004	APPLICATION IS NOW COMPLETE			
19	05/11/2004	SMALL ENTITY STATEMENT (37 CFR 1.27)			
18	06/01/2004	PRE-EXAM OFFICE ACTION WITHDRAWN			
17	06/01/2004	APPLICATION RETURN TO OIPE			
16	06/01/2004	APPLICATION RETURN FROM OIPE			
15	06/01/2004	APPLICATION IS NOW COMPLETE			
14	06/01/2004	CORRESPONDENCE ADDRESS CHANGE			
13	06/01/2004	PRE-EXAM OFFICE ACTION WITHDRAWN			
12	06/01/2004	APPLICATION RETURN TO OIPE			
11	06/01/2004	APPLICATION DISPATCHED FROM OIPE			
10	06/01/2004	APPLICATION IS NOW COMPLETE			
9	05/11/2004	ADDITIONAL APPLICATION FILING FEES			
8	05/11/2004	A SET OF SYMBOLS AND PROCEDURES, PROVIDED TO THE PTO ON A SET OF COMPUTER LISTINGS, THAT DESCRIBE IN			
7	05/11/2004	A STATEMENT BY ONE OR MORE INVENTORS SATISFYING THE REQUIREMENT UNDER 35 USC 115, OATH OF THE APPLIC			
6	05/18/2004	CRF IS GOOD TECHNICALLY / ENTERED INTO DATABASE			
5	03/30/2004	NOTICE MAILED--APPLICATION INCOMPLETE--FILING DATE ASSIGNED			

4	02/18/2004	CLEARED BY OIPE CSR			
3	02/18/2004	CASE CLASSIFIED BY OIPE			
2	01/07/2004	IFW SCAN & PACR AUTO SECURITY REVIEW			
1	12/15/2003	INITIAL EXAM TEAM NN			

Search Another: Application# [ ] Search

EXPLANATION OF PTA CALCULATION

EXPLANATION OF PTE CALCULATION

To go back, right click here and select Back. To go forward, right click here and select Forward. To refresh, right click here and select Refresh.

Back to OASIS | Home page

United States
Patent And
Trademark Office

P.O. Box 1450, Alexandria, Virginia 22313-1450 – www.uspto.gov

PETITION DECISION

10/28/04

Patent Documentation Center
Xerox Corporation
Xerox Square 20th Floor
100 Clinton Ave. S.
Rochester NY 14644

Dear Applicant:

The Box PG Pub replacement drawings for application number 10/737272 received on 09/20/04 by the U. S. Patent and Trademark Office will be included for patent publication.

Telephone inquiries should be directed to Kaletus King, Office of Pre-Grant Publication 703 605-4283.

Kaletus King

Signature of Reviewer, Office of Pre-Grant Publication

UNITED STATES PATENT AND TRADEMARK OFFICE

Commissioner for Patents
United States Patent and Trademark Office
P.O. Box 1450
Alexandria, VA 22313-1450
www.uspto.gov

SCULLY SCOTT MURPHY & PRESSER, PC
400 GARDEN CITY PLAZA
GARDEN CITY, NY 11530

COPY MAILED

OCT 0 6 2004

OFFICE OF PETITIONS

ON PETITION

In re Application of :
Miyoshi, et al. :
Application No. 10/737,273 :
Filed: December 16, 2003 :
Attorney Docket No. 17318 :

This is a decision on the papers styled, "Response To Notice To File Missing Parts Of Non-Provisional Application and Petition Under 37 CFR 1.181," filed on August 23, 2004, which has been treated as a Petition under 37 CFR 1.53, requesting that the above-identified application be accorded a filing date of December 16, 2003, including Figures 5A-C as described in the specification.

The application was filed on December 16, 2003. However, on June 22, 2004, the Office of Initial Patent Examination (OIPE) mailed a "Notice To File Missing Parts of Nonprovisional Application" (Notice) that stated the application had been accorded a filing date, but Figures 5A-C as described in the specification appear to have been omitted.

In response, on August 23, 2004 the instant petition and one (1) sheet of drawings (which includes Figure 5A-C) were submitted. The papers were accompanied by a copy of applicant's postcard receipt that acknowledges receipt of "13 (thirteen) Formal Drawings," on December 16, 2003. A review of the application file indicates the presence of only twelve (12) sheets of drawings originally filed on December 16, 2003, with the sheet containing Figures 5A-C missing. It is assumed that the missing sheet of drawings containing Figures 5A-C was misplaced by the Office.

In view of the above, the petition is granted.

The $130.00 petition fee has not been charged.

This application will be returned to OIPE for processing with a filing date of December 16, 2003, using the one (1) sheet of drawings, containing Figures 5A-C, that was submitted with the petition on August 23, 2004.

Telephone inquiries concerning this matter may be directed to the undersigned at (571)272-3228.

Edward J. Tannouse
Petitions Attorney
Office of Petitions
United States Patent and Trademark Office

UNITED STATES PATENT AND TRADEMARK OFFICE

Commissioner for Patents
United States Patent and Trademark Office
P.O. Box 1450
Alexandria, VA 22313-1450
www.uspto.gov

PPG INDUSTRIES, INC.
Intellectual Property Department
One PPG Place
Pittsburgh PA 15272

COPY MAILED

AUG 0 9 2007

OFFICE OF PETITIONS

In re Application of :
Retsch et al. :
Application No. 10/737283 :
Filing or 371(c) Date: 12/16/2003 : ON PETITION
Attorney Docket Number: :
1902A1 :

This is a decision on the renewed petition under 37 CFR 1.137(b), filed March 5, 2007, to revive the above-identified application. The delay in treating this petition is regretted.

This Petition is hereby **granted**.

Background

This application became abandoned as a result of petitioner's failure to file an appeal brief (and fee required by 37 CFR 41.20(b)(2)) within the time period provided in 37 CFR 41.37(a)(1). As an appeal brief (and appeal brief fee) was not filed within two (2) months of the Notice of Appeal filed May 2, 2006, and no extensions of time under the provisions of 37 CFR 1.136(a) were obtained, the appeal was dismissed and the proceedings as to the rejected claims were terminated. See 37 CFR 1.197(b). As no claims were allowed, the application became abandoned on May 2, 2006. *See* MPEP 1215.04.

The present petition

Applicant files the present petition and Appeal Brief. The petition satisfies the conditions for revival pursuant to the provisions of 37 CFR 1.137(b) in that (1) the reply in the form of a proper Appeal Brief; (2) the petition fee; and (3) the required statement of unintentional delay have been filed with the present petition. Accordingly, the reply is accepted as having been unintentionally delayed. The Appeal is reinstated. Accord MPEP 1215.04.

The application is being referred to Technology Center Art Unit 1711 for processing of the Appeal Brief.

Telephone inquiries concerning this petition Decision should be directed to the undersigned at (571) 272-3232.

Derek L. Woods
Attorney
Office of Petitions

SPE: T. Morris

SPE RESPONSE FOR CERTIFICATE OF CORRECTION

Paper No.: _____

DATE : 3/19/02

TO SPE OF : ART UNIT 1771

SUBJECT : Request for Certificate of Correction for Appl. No.: 10/232,307 Patent No.: 6172801

Please respond to this request for a certificate of correction within 7 days.

Please review the requested changes/corrections as shown in the **COCIN** document(s) in the IFW application image. No new matter should be introduced, nor should the scope or meaning of the claims be changed.

Please complete the response (see below) and forward the completed response to scanning using document code **COCX**.

Lamonte M. Newsome
Certificates of Correction Branch
703-308-9390 ext. 112

Thank You For Your Assistance

The request for issuing the above-identified correction(s) is hereby:

Note your decision on the appropriate box.

- ☒ **Approved** — **All** changes apply.
- ☐ **Approved in Part** — Specify below which changes **do not** apply.
- ☐ **Denied** — State the reasons for denial below.

Comments: _____

TERREL MORRIS
SUPERVISORY PATENT EXAMINER
TECHNOLOGY CENTER 1700

SPE 1771 **Art Unit**

UNITED STATES PATENT AND TRADEMARK OFFICE

Commissioner for Patents
United States Patent and Trademark Office
P.O. Box 1450
Alexandria, VA 22313-1450
www.uspto.gov

KAPLAN GILMAN GIBSON & DERNIER L.L.P.
900 ROUTE 9 NORTH
WOODBRIDGE NJ 07095

COPY MAILED

SEP 18 2006

OFFICE OF PETITIONS

In re Application of :
Yun-Qing Shi et al. :
Application No. 10/737,327 : DECISION ON PETITION
Filed: December 16, 2003 : UNDER 37 CFR 1.78(a)(6)
Attorney Docket No. 436/11 :

This is a decision on the petition under 37 CFR 1.78(a)(6), filed March 22, 2006, to accept an unintentionally delayed claim under 35 U.S.C. §119(e) for the benefit of the prior-filed provisional application set forth in the concurrently filed amendment.

The petition is **GRANTED**..

A petition under 37 CFR 1.78(a)(6) is only applicable to those applications filed on or after November 29, 2000. Further, the petition is appropriate only after expiration of the period specified in 37 CFR 1.78(a)(5)(ii) and must be filed during the pendency of the nonprovisional application. In addition, the petition must be accompanied by:

(1) the reference required by 35 U.S.C. § 119(e) and 37 CFR 1.78(a)(5)(i) to the prior-filed application, unless previously submitted;
(2) the surcharge set forth in § 1.17(t); and
(3) a statement that the entire delay between the date the claim was due under 37 CFR 1.78(a)(5)(ii) and the date the claim was filed was unintentional. The Director may require additional information where there is a question whether the delay was unintentional.

Additionally, the instant nonprovisional application must be pending at the time of filing of th reference to the prior-filed provisional application as required by 37 CFR 1.78(a)(5)(ii). Further, the nonprovisional application claiming the benefit of the prior-filed provisional application must have been filed within twelve months of the filing date of the prior-filed provisional application.

All of the above requirements having been satisfied, the late claim for priority under 35 U.S.C. § 119(e) is accepted as being unintentionally delayed.

The granting of the petition to accept the delayed benefit claim to the prior-filed application under 37 CFR 1.78(a)(6) should not be construed as meaning that this application is entitled to the benefit of the filing date of the prior-filed application. In order for the instant application to be entitled to the benefit of the prior-filed application, all other requirements under 35 U.S.C. §119(e) and 37 CFR 1.78(a)(4) and (a)(5) must be met. Similarly, the fact that the corrected Filing Receipt accompanying this decision on petition includes the prior-filed application should not be construed as meaning that applicant is entitled to the claim for benefit of priority to the prior-filed application noted thereon. Accordingly, the examiner will, in due course, consider this benefit claim and determine whether the instant application is entitled to the benefit of the earlier filing date.

37 CFR § 1.78(a)(6) requires a statement that the entire delay between the date the claim was due under 37 CFR § 1.78(a)(5)(ii) and the date the claim was filed was unintentional. Since the statement appearing in the petition varies from the required language, the statement is being construed as the statement required by 37 CFR §1.78(a)(6). If this is not a correct reading of the statement appearing in the petition, petitioner should promptly notify the Office.

A corrected Filing Receipt, which includes the priority claim to the prior-filed provisional application, accompanies this decision on petition.

Any inquiries concerning this decision may be directed to Senior Petitions Attorney Patricia Faison-Ball at (571) 272-3212. All other inquiries concerning either the examination procedures or status of the application should be directed to the Technology Center.

This matter is being referred to Technology Center AU 2624 for appropriate action on the amendment submitted March 22, 2006, including consideration by the examiner of the claim under 35 U.S.C. §119(e) for the benefit of priority to the prior-filed provisional application.

Frances Hicks
Petitions Examiner
Office of Petitions

ATTACHMENT: Corrected Filing Receipt

UNITED STATES PATENT AND TRADEMARK OFFICE

UNITED STATES DEPARTMENT OF COMMERCE
United States Patent and Trademark Office
Address: COMMISSIONER FOR PATENTS
P.O. Box 1450
Alexandria, Virginia 22313-1450
www.uspto.gov

APPL NO.	FILING OR 371 (c) DATE	ART UNIT	FIL FEE REC'D	ATTY.DOCKET NO	DRAWINGS	TOT CLMS	IND CLMS
10/737,327	12/16/2003	2624	971	436/11	9	54	8

CONFIRMATION NO. 6129

27538
KAPLAN GILMAN GIBSON & DERNIER L.L.P.
900 ROUTE 9 NORTH
WOODBRIDGE, NJ 07095

CORRECTED FILING RECEIPT
OC000000020346101
OC000000020346101

Date Mailed: 09/07/2006

Receipt is acknowledged of this regular Patent Application. It will be considered in its order and you will be notified as to the results of the examination. Be sure to provide the U.S. APPLICATION NUMBER, FILING DATE, NAME OF APPLICANT, and TITLE OF INVENTION when inquiring about this application. Fees transmitted by check or draft are subject to collection. Please verify the accuracy of the data presented on this receipt. **If an error is noted on this Filing Receipt, please mail to the Commissioner for Patents P.O. Box 1450 Alexandria Va 22313-1450. Please provide a copy of this Filing Receipt with the changes noted thereon. If you received a "Notice to File Missing Parts" for this application, please submit any corrections to this Filing Receipt with your reply to the Notice. When the USPTO processes the reply to the Notice, the USPTO will generate another Filing Receipt incorporating the requested corrections (if appropriate).**

Applicant(s)

Yun-Qing Shi, Millburn, NJ;
Guorong Xuan, Shanghai, CHINA;

Power of Attorney: None

Domestic Priority data as claimed by applicant

This appln claims benefit of 60/434,088 12/17/2002

Foreign Applications

If Required, Foreign Filing License Granted: 03/25/2004

The country code and number of your priority application, to be used for filing abroad under the Paris Convention, is US10/737,327

Projected Publication Date: Not Applicable

Non-Publication Request: No

Early Publication Request: No

**** SMALL ENTITY ****

Title

Methods and apparatus for lossless data hiding

Preliminary Class

382

PROTECTING YOUR INVENTION OUTSIDE THE UNITED STATES

Since the rights granted by a U.S. patent extend only throughout the territory of the United States and have no effect in a foreign country, an inventor who wishes patent protection in another country must apply for a patent in a specific country or in regional patent offices. Applicants may wish to consider the filing of an international application under the Patent Cooperation Treaty (PCT). An international (PCT) application generally has the same effect as a regular national patent application in each PCT-member country. The PCT process **simplifies** the filing of patent applications on the same invention in member countries, but **does not result** in a grant of "an international patent" and does not eliminate the need of applicants to file additional documents and fees in countries where patent protection is desired.

Almost every country has its own patent law, and a person desiring a patent in a particular country must make an application for patent in that country in accordance with its particular laws. Since the laws of many countries differ in various respects from the patent law of the United States, applicants are advised to seek guidance from specific foreign countries to ensure that patent rights are not lost prematurely.

Applicants also are advised that in the case of inventions made in the United States, the Director of the USPTO must issue a license before applicants can apply for a patent in a foreign country. The filing of a U.S. patent application serves as a request for a foreign filing license. The application's filing receipt contains further information and guidance as to the status of applicant's license for foreign filing.

Applicants may wish to consult the USPTO booklet, "General Information Concerning Patents" (specifically, the section entitled "Treaties and Foreign Patents") for more information on timeframes and deadlines for filing foreign patent applications. The guide is available either by contacting the USPTO Contact Center at 800-786-9199, or it can be viewed on the USPTO website at http://www.uspto.gov/web/offices/pac/doc/general/index.html.

For information on preventing theft of your intellectual property (patents, trademarks and copyrights), you may wish to consult the U.S. Government website, http://www.stopfakes.gov. Part of a Department of Commerce initiative, this website includes self-help "toolkits" giving innovators guidance on how to protect intellectual property in specific countries such as China, Korea and Mexico. For questions regarding patent enforcement issues, applicants may call the U.S. Government hotline at 1-866-999-HALT (1-866-999-4158).

LICENSE FOR FOREIGN FILING UNDER
Title 35, United States Code, Section 184
Title 37, Code of Federal Regulations, 5.11 & 5.15

GRANTED

The applicant has been granted a license under 35 U.S.C. 184, if the phrase "IF REQUIRED, FOREIGN FILING LICENSE GRANTED" followed by a date appears on this form. Such licenses are issued in all applications where the conditions for issuance of a license have been met, regardless of whether or not a license may be required as set forth in 37 CFR 5.15. The scope and limitations of this license are set forth in 37 CFR 5.15(a) unless an earlier license has been issued under 37 CFR 5.15(b). The license is subject to revocation upon written notification. The date indicated is the effective date of the license, unless an earlier license of similar scope has been granted under 37 CFR 5.13 or 5.14.

This license is to be retained by the licensee and may be used at any time on or after the effective date thereof unless it is revoked. This license is automatically transferred to any related applications(s) filed under 37 CFR 1.53(d). This license is not retroactive.

The grant of a license does not in any way lessen the responsibility of a licensee for the security of the subject matter as imposed by any Government contract or the provisions of existing laws relating to espionage and the national security or the export of technical data. Licensees should apprise themselves of current regulations especially with respect to certain countries, of other agencies, particularly the Office of Defense Trade Controls, Department of State (with respect to Arms, Munitions and Implements of War (22 CFR 121-128)); the Bureau of Industry and Security, Department of Commerce (15 CFR parts 730-774); the Office of Foreign Assets Control, Department of Treasury (31 CFR Parts 500+) and the Department of Energy.

NOT GRANTED

No license under 35 U.S.C. 184 has been granted at this time, if the phrase "IF REQUIRED, FOREIGN FILING LICENSE GRANTED" DOES NOT appear on this form. Applicant may still petition for a license under 37 CFR 5.12, if a license is desired before the expiration of 6 months from the filing date of the application. If 6 months has lapsed from the filing date of this application and the licensee has not received any indication of a secrecy order under 35 U.S.C. 181, the licensee may foreign file the application pursuant to 37 CFR 5.15(b).

UNITED STATES PATENT AND TRADEMARK OFFICE

Commissioner for Patents
United States Patent and Trademark Office
P.O. Box 1450
Alexandria, VA 22313-1450
www.uspto.gov

WILLIAM R STARK JR
26602 ARACENA DR
MISSION VIEJO CA 92961

COPY MAILED

JAN 19 2006

OFFICE OF PETITIONS

In re Application of	:	
William Reynolds Stark	:	
Application No. 10/737,329	:	ON PETITION
Filed: December 17, 2003	:	
Title: Root Zone Injection Surface Irrigation System	:	

This is a decision on the paper filed October 20, 2005 ("dated" September 4, 2005), which is being treated as a petition to withdraw the holding of abandonment under 37 CFR 1.181.

The petition under 37 CFR 1.181 is **DISMISSED**.

The above-identified application became abandoned for failure to timely file a response to the Office action mailed January 26, 2005, which set a shortened statutory period for reply of three (3) months. Applicant filed a response on April 29, 2005. However, the response did not include a one month extension of time, and therefore was not timely. Accordingly,

the application became abandoned on April 27, 2005. A Notice of Abandonment was mailed on August 31, 2005.

Applicant has filed the instant petition, arguing that he deposited the response on April 26, 2005. In support thereof, applicant has included a copy of a receipt, showing that some correspondence was mailed to Alexandria, Virginia (Zip Code 22313) on April 26, 2005.

Correspondence is considered filed with the US Patent and Trademark Office on the date it is received. However, if a person mails correspondence via US Postal Service Express Mail, that correspondence will be considered filed with the PTO on the date it is deposited with the US Postal Service, provided the Express Mail mailing label was placed on the paper(s) that constitute the correspondence prior to the original mailing be Express Mail. See 37 CFR 1.10.

Correspondence will also be considered to have been timely filed if it was mailed with a Certificate of Mailing or Transmission. For a Certificate of Mailing to be timely, the correspondence must: (1) be mailed prior to expiration of the set period of time; (2) must be addressed to the US Patent and Trademark Office with sufficient postage as first class mail; and (3) include a certificate for each piece of correspondence, stating the date of deposit via first class mail. See 37 CFR 1.8.

A review of the response filed April 29, 2005 reveals that while it was "dated" April 25, 2005, it was not filed with a Certificate of Mailing or via US Postal Service Express Mail. While petitioner provided a receipt showing that some correspondence was mailed to Alexandria, Virginia on April 26, 2005, the Office must be able to associate the receipt with the April 29, 2005 response. That is why the Office requires the Express Mail mailing label number or Certificate of Mailing be placed directly on the correspondence being filed.

Petitioner is recommended to promptly file a petition to revive under 37 CFR 1.137(b). A grantable petition pursuant to 37 CFR 1.137(b) must be accompanied by (1) The reply required to the outstanding Office action or notice, unless previously filed; (2) The petition fee as set forth in 37 CFR 1.17(m) - currently $750 for a small entity; (3) A statement that the entire delay in filing the required reply from the due date for the reply until the filing of a grantable petition pursuant to this paragraph was unintentional. The Commissioner may require additional information where there is a question whether the delay was unintentional; and (4) Any terminal disclaimer (and fee as set forth in 37 CFR 1.20(d)) required pursuant to paragraph (d) of this section. A copy of the form for a petition under 37 CFR 1.137(b) is enclosed for petitioner's convenience.

Further correspondence with respect to this matter should be addressed as follows:

By mail: Mail Stop Petitions
Commissioner for Patents
P.O. Box 1450
Alexandria VA 22313-1450

By FAX: (501)273-8300
Attn: Office of Petitions

Telephone inquiries concerning this decision should be directed to the undersigned at (571)272-3207.

Cliff Congo
Petitions Attorney
Office of Petitions

Enc: PTO/SB/64 (2 pages)
Privacy Act Statement (1 page)

UNITED STATES PATENT AND TRADEMARK OFFICE

Commissioner for Patents
United States Patent and Trademark Office
P.O. Box 1450
Alexandria, VA 22313-1450
www.uspto.gov

COPY MAILED

APR 13 2006

OFFICE OF PETITIONS

WILLIAM R STARK JR
26602 ARACENA DR
MISSION VIEJO CA 92961

In re Application of :
William Reynolds Stark :
Application No. 10/737,329 : ON PETITION
Filed: December 17, 2003 :
Title: Root Zone Injection Surface Irrigation System :

This is a decision on the paper filed February 8, 2006 ("dated" February 4, 2006), which is being treated as a renewed petition to withdraw the holding of abandonment under 37 CFR 1.181.

The renewed petition under 37 CFR 1.181 is **DISMISSED**.

The above-identified application became abandoned for failure to timely file a response to the Office action mailed January 26, 2005, which set a shortened statutory period for reply of three (3) months. Applicant filed a response on April 29, 2005. However, the response did not include a one month extension of time, and therefore was not timely. Accordingly, the application became abandoned on April 27, 2005. A Notice of Abandonment was mailed on August 31, 2005.

On October 20, 2005, Applicant filed a petition to withdraw the holding of abandonment, arguing that he deposited the response on April 26, 2005. In support thereof, applicant included a copy of a receipt, showing that some correspondence was mailed to Alexandria, Virginia (Zip Code 22313) on April 26, 2005.

However, the petition was dismissed in a decision mailed on January 19, 2006. The decision outlined the two procedures available to applicants to ensure that papers filed with the US Patent and Trademark Office are considered to be timely filed. The first was the US Postal Service Express Mail provisions pursuant to 37 CFR 1.10. The other procedure was the Certificate of Mailing or Transmission procedures pursuant to 37 CFR 1.8. The decision then explained that because the response filed April 29, 2005 was not filed via US Postal Service Express Mail or with a Certificate of Mailing or Transmission, the response was not timely filed.

On renewed petition, petitioner has argued that the USPTO's rejection of his correspondence due to a mailing deficiency is unlawful. Suffice it to say, the courts have not found such arguments to be persuasive. In fact, the courts have found that where there is an unexpected failure, imperfection, or fault with a mail agency, such grounds may constitute a grantable petition to revive an abandoned application pursuant to the unavoidable delay provisions of 37 CFR 1.137(a). See In re Mattullath , 38 App. D.C. 497, 514-15 (1912). Here, however, there was no "mailing deficiency" with respect to the US Postal Service. The deficiency was one entirely of petitioner's doing. Petitioner states that he was unaware of the USPTO's requirements of Express Mail or Certificate of Mailing. It is petitioner's responsibility to familiarize himself with the laws, rules, and procedures of the United States Patent and Trademark Office. Furthermore, the Office action mailed January 26, 2005, on page 11, specifically informed petitioner of the benefits and requirements of the Certificate of Mailing provisions under 37 CFR 1.8. A copy of the page is enclosed for petitioner.

Petitioner is recommended to promptly file a petition to revive under 37 CFR 1.137(b). A grantable petition pursuant to 37 CFR 1.137(b) must be accompanied by (1) The reply required to the outstanding Office action or notice, unless previously filed; (2) The petition fee as set forth in 37 CFR 1.17(m) - currently $750 for a small entity; (3) A statement that the entire delay in filing the required reply from the due date for the reply until the filing of a grantable petition pursuant to this paragraph was unintentional. The Commissioner may require additional information where there is a question whether the delay was unintentional; and (4) Any terminal disclaimer (and fee as set forth in 37 CFR 1.20(d)) required pursuant to paragraph (d) of this section. A copy of the form for a petition under 37 CFR 1.137(b) is enclosed for petitioner's convenience.

Any delay in filing a petition under 37 CFR 1.137(b) may be considered by the Office to be intentional delay.

Further correspondence with respect to this matter should be addressed as follows:

By mail: Mail Stop Petitions
Commissioner for Patents
P.O. Box 1450
Alexandria VA 22313-1450

By FAX: (501)273-8300
Attn: Office of Petitions

Telephone inquiries concerning this decision should be directed to the undersigned at (571)272-3207.

Cliff Congo
Petitions Attorney
Office of Petitions

Enc: PTO/SB/64 (2 pages)
Privacy Act Statement (1 page)
Page 11 of January 26, 2005 Office action (1 page)

12. The following are suggested formats for either a Certificate of Mailing or Certificate of Transmission under 37 CFR 1.8(a). The certification may be included with all correspondence concerning this application or proceeding to establish a date of mailing or transmission under 37 CFR 1.8(a). Proper use of this procedure will result in such communication being considered as timely if the established date is within the required period for reply. The Certificate should be signed by the individual actually depositing or transmitting the correspondence or by an individual who, upon information and belief, expects the correspondence to be mailed or transmitted in the normal course of business by another no later than the date indicated.

Certificate of Mailing

I hereby certify that this correspondence is being deposited with the United States Postal Service with sufficient postage as first class mail in an envelope addressed to:

Commissioner for Patents
P.O. Box 1450
Alexandria, VA 22313-1450

on _____.
(Date)

Typed or printed name of person signing this certificate:

_____

Signature: _____

Certificate of Transmission

I hereby certify that this correspondence is being facsimile transmitted to the United States Patent and Trademark Office, Fax No. (703)_____ - _____ on _____.
(Date)

Typed or printed name of person signing this certificate:

_____

Signature: _____

Please refer to 37 CFR 1.6(d) and 1.8(a)(2) for filing limitations concerning facsimile transmissions and mailing, respectively.

PTO/SB/64 (10-05)
Approved for use through 07/31/2006. OMB 0651-0031
U.S. Patent and Trademark Office; U.S. DEPARTMENT OF COMMERCE
Under the Paperwork Reduction Act of 1995, no persons are required to respond to a collection of information unless it displays a valid OMB control number.

PETITION FOR REVIVAL OF AN APPLICATION FOR PATENT ABANDONED UNINTENTIONALLY UNDER 37 CFR 1.137(b)

Docket Number (Optional)

First named inventor:

Application No.: Art Unit:

Filed: Examiner:

Title:

Attention: Office of Petitions
Mail Stop Petition
Commissioner for Patents
P.O. Box 1450
Alexandria, VA 22313-1450
FAX (571) 273-8300

NOTE: If information or assistance is needed in completing this form, please contact Petitions Information at (571) 272-3282.

The above-identified application became abandoned for failure to file a timely and proper reply to a notice or action by the United States Patent and Trademark Office. The date of abandonment is the day after the expiration date of the period set for reply in the office notice or action plus an extensions of time actually obtained.

APPLICANT HEREBY PETITIONS FOR REVIVAL OF THIS APPLICATION

NOTE: A grantable petition requires the following items:
(1) Petition fee;
(2) Reply and/or issue fee;
(3) Terminal disclaimer with disclaimer fee - required for all utility and plant applications filed before June 8, 1995; and for all design applications; and
(4) Statement that the entire delay was unintentional.

1.Petition fee

☐ Small entity-fee $ _____ (37 CFR 1.17(m)). Applicant claims small entity status. See 37 CFR 1.27.

☐ Other than small entity – fee $ _____ (37 CFR 1.17(m))

2. Reply and/or fee

A. The reply and/or fee to the above-noted Office action in the form of _____(identify type of reply):

☐ has been filed previously on _____.
☐ is enclosed herewith.

B. The issue fee and publication fee (if applicable) of $ _____.

☐ has been paid previously on _____.
☐ is enclosed herewith.

This collection of information is required by 37 CFR 1.137(b). The information is required to obtain or retain a benefit by the public which is to file (and by the USPTO to process) an application. Confidentiality is governed by 35 U.S.C. 122 and 37 CFR 1.11 and 1.14. This collection is estimated to take 1.0 hour to complete, including gathering, preparing, and submitting the completed application form to the USPTO. Time will vary depending upon the individual case. Any comments on the amount of time you require to complete this form and/or suggestions for reducing this burden, should be sent to the Chief Information Officer, U.S. Patent and Trademark Office, U.S. Department of Commerce, P.O. Box 1450, Alexandria, VA 22313-1450. DO NOT SEND FEES OR COMPLETED FORMS TO THIS ADDRESS. **SEND TO: Mail Stop Petition, Commissioner for Patents, P.O. Box 1450, Alexandria, VA 22313-1450.**

If you need assistance in completing the form, call 1-800-PTO-9199 and select option 2.

3. Terminal disclaimer with disclaimer fee

☐ Since this utility/plant application was filed on or after June 8, 1995, no terminal disclaimer is required.

☐ A terminal disclaimer (and disclaimer fee (37 CFR 1.20(d)) of $ _____ for a small entity or $ _____ for other than a small entity) disclaiming the required period of time is enclosed herewith (see PTO/SB/63).

4. STATEMENT: The entire delay in filing the required reply from the due date for the required reply until the filing of a grantable petition under 37 CFR 1.137(b) was unintentional. [NOTE: The United States Patent and Trademark Office may require additional information if there is a question as to whether either the abandonment or the delay in filing a petition under 37 CFR 1.137(b) was unintentional (MPEP 711.03(c), subsections (III)(C) and (D)).]

WARNING:

Petitioner/applicant is cautioned to avoid submitting personal information in documents filed in a patent application that may contribute to identity theft. Personal information such as social security numbers, bank account numbers, or credit card numbers (other than a check or credit card authorization form PTO-2038 submitted for payment purposes) is never required by the USPTO to support a petition or an application. If this type of personal information is included in documents submitted to the USPTO, petitioners/applicants should consider redacting such personal information from the documents before submitting them to the USPTO. Petitioner/applicant is advised that the record of a patent application is available to the public after publication of the application (unless a non-publication request in compliance with 37 CFR 1.213(a) is made in the application) or issuance of a patent. Furthermore, the record from an abandoned application may also be available to the public if the application is referenced in a published application or an issued patent (see 37 CFR 1.14). Checks and credit card authorization forms PTO-2038 submitted for payment purposes are not retained in the application file and therefore are not publicly available.

_____ Signature

_____ Date

_____ Typed or printed name

_____ Registration Number, if applicable

_____ Address

_____ Telephone Number

_____ Address

Enclosures: ☐ Fee Payment

☐ Reply

☐ Terminal Disclaimer Form

☐ Additional sheets containing statements establishing unintentional delay

☐ Other: _____

CERTIFICATE OF MAILING OR TRANSMISSION [37 CFR 1.8(a)]

I hereby certify that this correspondence is being:

☐ Deposited with the United States Postal Service on the date shown below with sufficient postage as first class mail in an envelope addressed to: Mail Stop Petition, Commissioner for Patents, P. O. Box 1450, Alexandria, VA 22313-1450.

☐ Transmitted by facsimile on the date shown below to the United States Patent and Trademark Office as (571) 273-8300.

_____ Date

_____ Signature

_____ Typed or printed name of person signing certificate

Privacy Act Statement

The **Privacy Act of 1974 (P.L. 93-579)** requires that you be given certain information in connection with your submission of the attached form related to a patent application or patent. Accordingly, pursuant to the requirements of the Act, please be advised that: (1) the general authority for the collection of this information is 35 U.S.C. 2(b)(2); (2) furnishing of the information solicited is voluntary; and (3) the principal purpose for which the information is used by the U.S. Patent and Trademark Office is to process and/or examine your submission related to a patent application or patent. If you do not furnish the requested information, the U.S. Patent and Trademark Office may not be able to process and/or examine your submission, which may result in termination of proceedings or abandonment of the application or expiration of the patent.

The information provided by you in this form will be subject to the following routine uses:

1. The information on this form will be treated confidentially to the extent allowed under the Freedom of Information Act (5 U.S.C. 552) and the Privacy Act (5 U.S.C 552a). Records from this system of records may be disclosed to the Department of Justice to determine whether disclosure of these records is required by the Freedom of Information Act.
2. A record from this system of records may be disclosed, as a routine use, in the course of presenting evidence to a court, magistrate, or administrative tribunal, including disclosures to opposing counsel in the course of settlement negotiations.
3. A record in this system of records may be disclosed, as a routine use, to a Member of Congress submitting a request involving an individual, to whom the record pertains, when the individual has requested assistance from the Member with respect to the subject matter of the record.
4. A record in this system of records may be disclosed, as a routine use, to a contractor of the Agency having need for the information in order to perform a contract. Recipients of information shall be required to comply with the requirements of the Privacy Act of 1974, as amended, pursuant to 5 U.S.C. 552a(m).
5. A record related to an International Application filed under the Patent Cooperation Treaty in this system of records may be disclosed, as a routine use, to the International Bureau of the World Intellectual Property Organization, pursuant to the Patent Cooperation Treaty.
6. A record in this system of records may be disclosed, as a routine use, to another federal agency for purposes of National Security review (35 U.S.C. 181) and for review pursuant to the Atomic Energy Act (42 U.S.C. 218(c)).
7. A record from this system of records may be disclosed, as a routine use, to the Administrator, General Services, or his/her designee, during an inspection of records conducted by GSA as part of that agency's responsibility to recommend improvements in records management practices and programs, under authority of 44 U.S.C. 2904 and 2906. Such disclosure shall be made in accordance with the GSA regulations governing inspection of records for this purpose, and any other relevant (*i.e.*, GSA or Commerce) directive. Such disclosure shall not be used to make determinations about individuals.
8. A record from this system of records may be disclosed, as a routine use, to the public after either publication of the application pursuant to 35 U.S.C. 122(b) or issuance of a patent pursuant to 35 U.S.C. 151. Further, a record may be disclosed, subject to the limitations of 37 CFR 1.14, as a routine use, to the public if the record was filed in an application which became abandoned or in which the proceedings were terminated and which application is referenced by either a published application, an application open to public inspection or an issued patent.
9. A record from this system of records may be disclosed, as a routine use, to a Federal, State, or local law enforcement agency, if the USPTO becomes aware of a violation or potential violation of law or regulation.

UNITED STATES PATENT AND TRADEMARK OFFICE

Commissioner for Patents
United States Patent and Trademark Office
P.O. Box 1450
Alexandria, VA 22313-1450
www.uspto.gov

PRICE HENEVELD COOPER DEWITT & LITTON, LLP
695 KENMOOR, S.E.
P.O. BOX 2567
GRAND RAPIDS MI 49501

COPY MAILED

FEB 0 1 2005

OFFICE OF PETITIONS

In re Application of	:	
Kobayashi et al.	:	
Application No. 10/737,336	:	DECISION ON PETITION
Filed: December 16, 2003	:	UNDER 37 CFR 1.55(c)
Attorney Docket No. KIK01 P-322A	:	

This is a decision on the petition under 37 CFR 1.55(c), filed January 3, 2005, requesting acceptance of an unintentionally delayed claim under 35 U.S.C. § 119 (a) – (d) and (f) for the filing date of Japanese Application No. 2000-166833, filed April 26, 2000.

The petition is **DISMISSED**.

A petition under 37 CFR 1.55(c) to accept an unintentionally delayed claim for priority requires:

(1) the nonprovisional application claiming the benefit of an earlier filing date must be filed on or after November 29, 2000;

(2) the claim submitted with the petition must identify the prior foreign application for which priority is claimed, as well as any foreign application for the same subject matter and having a filing date before that of the application for which priority is claimed, by the application number, country, and the filing date, and must be supplied on an application data sheet (ADS) in accordance with 37 CFR 1.76 or on the oath or declaration;

(3) the surcharge set forth in § 1.17(t);

(4) a statement that the entire delay between the date the claim was due under 37 CFR 1.55(a)(1)(i) and the date the claim was filed was unintentional. (The Commissioner may require additional information where there is a question whether the delay was unintentional); and

(5) the above-identified nonprovisional application must be filed within 12 months of the filing date of the foreign application.

The instant petition does not comply with item (2) above. Petitioner failed to include the claim for foreign priority in either an ADS or on the oath or declaration.

Further, after a review of the above-identified application, it does not appear that a certified copy of the above-noted Japanese application has been submitted. Although it is not required for the instant petition, petitioner is reminded that the certified copy must be filed before the patent is granted.

Accordingly, before the petition under 37 CFR 1.55(c) can be granted, an ADS or an oath or declaration incorporating the claim for foreign priority, along with a renewed petition under 37 CFR 1.55(c), is required.

Further correspondence with respect to this matter should be addressed as follows:

By mail: Mail Stop PETITIONS
Commissioner for Patents
Post Office Box 1450
Alexandria, VA 22313-1450

By hand: Customer Window located at:

U.S. Patent and Trademark Office
Customer Service Window Randolph Building
401 Dulany Street
Alexandria, VA 22314

By fax: (703) 872-9306
ATTN: Office of Petitions

Any questions concerning this matter may be directed to Paralegal Liana Chase at (571) 272-3206.

Frances Hicks
Petitions Examiner
Office of Petitions
Office of the Deputy Commissioner
for Patent Examination Policy

UNITED STATES PATENT AND TRADEMARK OFFICE

Commissioner for Patents
United States Patent and Trademark Office
P.O. Box 1450
Alexandria, VA 22313-1450
www.uspto.gov

PRICE HENEVELD COOPER DEWITT & LITTON, LLP
695 KENMOOR, S.E.
P O BOX 2567
GRAND RAPIDS, MI 49501

COPY MAILED

MAR 2 2 2005

OFFICE OF PETITIONS

In re Application of	:	
Kobayashi et al.	:	
Application No. 10/737,336	:	DECISION GRANTING PETITION
Filed: December 16, 2003	:	UNDER 37 CFR 1.55(c)
Attorney Docket No. KIK01 P-322A	:	

This is a decision on the renewed petition under 37 CFR 1.55(c), filed March 7, 2005, for acceptance of an unintentionally delayed claim under 35 U.S.C. § 119(a)-(d) for benefit of the filing date of foreign Application No. 2000-166833, filed April 26, 2000.

A petition under 37 CFR 1.55(c) to accept an unintentionally delayed claim for priority requires:

(1) The nonprovisional application claiming the benefit of an earlier filing date must be filed on or after November 29, 2000;
(2) the claim submitted with the petition must identify the prior foreign application for which priority is claimed, as well as any foreign application for the same subject matter and having a filing date before that of the application for which priority is claimed, by the application number, country, and the filing date and be included either in an oath or declaration (37 CFR 1.63(c)(2)) or in an Application Data Sheet (37 CFR 1.76(b)(6);
(3) the surcharge as set forth in 37 CFR 1.17(t);
(4) a statement that the entire delay between the date the claim was due under 37 CFR 1.55(a)(1) and the date the claim was filed was unintentional. (The Commissioner may require additional information where there is a question whether the delay was unintentional.); and
(5) the above-identified nonprovisional application must be filed within 12 months of the filing date of the foreign application.

The instant pending nonprovisional application was filed after November 29, 2000, and did not include a reference to the foreign application, for which benefit is now sought, within the later of four months from the actual filing date of the application or sixteen months from the filing date of the prior foreign application. Therefore, since the claim for priority is submitted after the period specified in 37 CFR 1.55(a)(1)(i), this is an appropriate petition under the provisions of 37 CFR 1.55(c).

The above-identified pending nonprovisional application was filed on December 16, 2003. Application No. 09/838,905, which is a continuation of the instant application, was filed on April 20, 2001, which is within 12 months of April 26, 2000 (the filing date of the foreign application to which benefit is now being claimed). On March 7, 2005, an executed oath/declaration was received which identifies the foreign application for which priority is claimed by application number, country and filing date. The required petition fee of $1370.00 was received with the previous petition on January 3, 2005. Lastly, petitioner has provided an adequate statement of unintentional delay.

All requirements being met, the petition under 37 CFR 1.55(c) to accept an unintentionally delayed claim for priority under 35 U.S.C. § 119(a)-(d) is **GRANTED**.

A Corrected Filing Receipt, which reflects the above-noted foreign application, accompanies this decision on petition.

This matter is being referred to Technology Center AU 2863. The examiner of record will determine whether the instant application is entitled to the foreign priority claim under 35 U.S.C. § 119(a)-(d) upon receipt of a reply to the non-final Office action mailed on March 4, 2005.

Any inquiries directly pertaining to this matter may be directed to Paralegal Liana Chase at (571) 272-3206.

Frances Hicks
Petitions Examiner
Office of Petitions
Office of the Deputy Commissioner
for Patent Examination Policy

ATTACHMENT: Corrected Filing Receipt

UNITED STATES PATENT AND TRADEMARK OFFICE

Commissioner for Patents
United States Patent and Trademark Office
P.O. Box 1450
Alexandria, VA 22313-1450
www.uspto.gov

WILMER CUTLER PICKERING HALE AND DORR LLP
60 STATE STREET
BOSTON, MA 02109

COPY MAILED

JUN 0 6 2007

OFFICE OF PETITIONS

In re Application of	:	
Elias Georges, et al.	:	
Application No. 10/737,350	:	DECISION DISMISSING PETITION
Filed: December 15, 2003	:	UNDER 37 CFR 1.313(c)(2)
Attorney Docket No. 112418-149 AND AUR-011US	:	

This is a decision on the petition under 37 CFR 1.313(c)(2), filed May 31, 2007, to withdraw the above-identified application from issue after payment of the issue fee.

The petition is **DISMISSED AS MOOT**.

Unfortunately, the petition was not referred to the appropriate deciding official for decision until after the issuance of this application into a patent. However, petitioner's attention is directed to 37 CFR 1.313(d), which states:

> A petition under this section will not be effective to withdraw the application from issue unless it is actually received and granted by the appropriate officials **before the date of issue**. (Emphasis added)

In this case, the petition was not received in the Office of Petitions for consideration until June 5, 2007, the date upon which the above-identified application issued as U.S. Patent No. 7,226,748. Since the case has now issued, the petition to withdraw from issue cannot be granted.

Petitioner is reminded, that while petitions to withdraw from issue may be mailed to the Commissioner for Patents, as was done in this case, applicants were cautioned to hand carry or fax petitions to withdraw from issue directly to the Office of Petitions. *See* MPEP § 1308.

The request for continued examination (RCE) filed concurrently with the petition is improper in view of the issuance of this application into a patent and will not be processed. Accordingly, the $395 filing fee and the $130 petition fee submitted are unnecessary and will be refunded in due course.

The Information Disclosure Statement has been made of record in the file of the above-identified application without further consideration. *See* 37 CFR 1.97(i).

Telephone inquiries concerning this matter may be directed to the undersigned at (571) 272-3204.

Sherry D. Brinkley
Petitions Examiner
Office of Petitions

10/737,361

UNITED STATES DEPARTMENT OF COMMERCE
Patent and Trademark Office
ASSISTANT SECRETARY OF COMMERCE AND
COMMISSIONER OF PATENTS AND TRADEMARKS
Washington, DC 20231

8/1/08

Patent No. :7326696
Inventor(s) : Mark L. Nelson et al.
Issued : 2/5/2008
Title : Amino-Methyl Substituted Tetracycline Compounds
Atty.doc./File No.

Request for Certificates of Correction

Consideration has been given to your request for the issuance of a Certificate of Correction, for the above – identified patent under the provisions of CFR 1.322.

Inspection of the application for the patent reveals that claim 1, col. 111 line 17 is printed in accordance with the record and there is no corespondence to delete this error. Therefore being no fault on the Patent and Trademark Office, It has no authority to issue a certificate of correction under the provision of 1.322.

In view of the forgoing, your request in this matter, is hereby denied.

Future written correspondence concerning this matter should be filed and directed to Decisions & Certificates of Correction Branch.

Henry Randall
Cecelia Newman
Decisions & Certificates
of Correction Branch
(703) 308-9390 Ext. 108

Heidi A. Erlacher
MINTZ LEVIN
One Financial Center
Boston, Massachusetts 02111

HR/CBN

UNITED STATES PATENT AND TRADEMARK OFFICE

Commissioner for Patents
United States Patent and Trademark Office
P.O. Box 1450
Alexandria, VA 22313-1450
www.uspto.gov

PATENTTM.US
P. O. BOX 82788
PORTLAND, OR 97282-0788

COPY MAILED

FEB 1 8 2009

OFFICE OF PETITIONS

In re Application of :
Kenichi Morimoto :
Application No. 10/737,393 : DECISION ON PETITION
Filed: December 16, 2003 :
Attorney Docket No. A-468 :

This is a decision on the petition under the unintentional provisions of 37 CFR 1.137(b), filed December 22, 2008, to revive the above-identified application.

The application became abandoned for failure to reply in a timely manner to the Notice of Non-Compliant Amendment (Notice), mailed June 2, 2008, which set a shortened statutory period for reply of one (1) month or thirty (30) days (whichever is later). No extensions of time under the provisions of 37 CFR 1.136(a) were obtained. Accordingly, the application became abandoned on July 3, 2008.

The petition satisfies the requirements of 37 CFR 1.137(b) in that petitioner has supplied (1) the reply in the form of an amendment, (2) the petition fee of $1620, and (3) a proper statement of unintentional delay.

In view of the above, the petition is **GRANTED**.

Telephone inquiries concerning this decision should be directed to undersigned at (571) 272-1642.

This application is being referred to Technology Center AU 1792 for appropriate action by the Examiner in the normal course of business on the reply received December 22, 2008.

/AMW/
April M. Wise
Petitions Examiner
Office of Petitions

UNITED STATES PATENT AND TRADEMARK OFFICE

Commissioner for Patents
United States Patent and Trademark Office
P.O. Box 1450
Alexandria, VA 22313-1450
www.uspto.gov

RICHARD COALE WILLSON JR
3205 HARVEST MOON DR
STE 200
PALM HARBOR FL 34683-2127

COPY MAILED

FEB 25 2005

OFFICE OF PETITIONS

In re Application of :
Richard Coale Willson et al. : DECISION ON PETITION
Application No. 10/737,403 :
Filed: December 16, 2003 :
Attorney Docket No.: 015AUS/UH2229 :

This is a decision on the petition under 37 CFR 1.137(a), filed January 20, 2005, to revive the above-identified application.

The petition is **DISMISSED**.

Any request for reconsideration of this decision must be submitted within TWO (2) MONTHS from the mail date of this decision. Extensions of time under 37 CFR 1.136(a) are permitted. The reconsideration request should include a cover letter entitled "Renewed Petition under 37 CFR 1.137(a)" or "Renewed Petition under 37 CFR 1.137(b)." This is not a final agency decision.

This application became abandoned on June 20, 2004, for failure to timely respond to the Notice to Comply with Requirements for Patent Applications Containing Nucleotide Sequence and/or Amino Acid Sequence Disclosures ("Notice") mailed April 19, 2004 which set a two (2) month period for reply. Accordingly, a Notice of Abandonment was mailed January 6, 2005.

Petitioner asserts that the "Notice" was never received and thus that the delay in responding was unavoidable.

A grantable petition to revive an abandoned application under 37 CFR 1.137(a) must be accompanied by:

> (1) the required reply, unless previously filed. In a nonprovisional application abandoned for failure to prosecute, the required reply may be met by the filing of a continuing application. In a nonprovisional application filed on or after June 8, 1995, and abandoned for failure to prosecute, the required reply may also be met by the filing of a request for continued examination in compliance with § 1.114. In an application or patent, abandoned or lapsed for failure to pay the

> issue fee or any portion thereof, the required reply must be the payment of the issue fee or any outstanding balance thereof;
> (2) the petition fee as set forth in § 1.17(l);
> (3) a showing to the satisfaction of the Commissioner that the entire delay in filing the required reply from the due date for the reply until the filing of a grantable petition pursuant to this paragraph was unavoidable; and
> (4) any terminal disclaimer (and fee as set forth in § 1.20(d)) required pursuant to paragraph (c) of this section.

This petition lacks items (3) above.

With regard to item (3), decisions on reviving abandoned applications on the basis of "unavoidable" delay have adopted the reasonably prudent person standard in determining if the delay was unavoidable:

> The word 'unavoidable' . . . is applicable to ordinary human affairs, and requires no more or greater care or diligence than is generally used and observed by prudent and careful men in relation to their most important business. It permits them in the exercise of this care to rely upon the ordinary and trustworthy agencies of mail and telegraph, worthy and reliable employees, and such other means and instrumentalities as are usually employed in such important business. If unexpectedly, or through the unforeseen fault or imperfection of these agencies and instrumentalities, there occurs a failure, it may properly be said to be unavoidable, all other conditions of promptness in its rectification being present.[1]

The showing of record is inadequate to establish unavoidable delay within the meaning of 37 CFR 1.137(a). Specifically, an application is "unavoidably" abandoned only where petitioner, or counsel for petitioner, takes all action necessary for a proper response to the outstanding Office action, but through the intervention of unforeseen circumstances, such as failure or mail, telegraph, telefacsimile, or the negligence of otherwise reliable employees, the response is not timely received in the Office.[2]

---

[1] In re Mattullath, 38 App. D.C. 497, 514-15 (1912)(quoting Ex parte Pratt, 1887 Dec. Comm'r Pat. 31, 32-33 (1887)); see also Winkler v. Ladd, 221 F. Supp. 550, 552, 138 USPQ 666, 167-68 (D.D.C. 1963), aff'd, 143 USPQ 172 (D.C. Cir. 1963); Ex parte Henrich, 1913 Dec. Comm'r Pat. 139, 141 (1913). In addition, decisions on revival are made on a "case-by-case basis, taking all the facts and circumstances into account." Smith v. Mossinghoff, 671 F.2d 533, 538, 213 USPQ 977, 982 (D.C. Cir. 1982). Finally, a petition cannot be granted where a petitioner has failed to meet his or her burden of establishing that the delay was "unavoidable." Haines v. Quigg, 673 F. Supp. 314, 316-17, 5 USPQ2d 1130, 1131-32 (N.D. Ind. 1987).

[2] Ex parte Pratt, 1887 Dec. Comm'r Pat. 31 (Comm'r Pat. 1887).

Petitioner asserts that the Notice mailed April 19, 2004, was never received. A review of the record indicates no irregularity in the mailing of the Office action, and in the absence of any irregularity in the mailing, there is a strong presumption that the Office action was properly mailed to the address of record. This presumption may be overcome by a showing that the Office action was not in fact received. The showing required to establish the failure to receive an Office action must include a statement from the inventor that the Office communication was not received and attesting to the fact that a search of the docket records indicates that the Office communication was not received. A copy of the docket record where the non-received Office communication would have been entered had it been received and docketed must be attached to and referenced in petitioner's statement.[3]

Petitioner has not submitted additional evidence to corroborate the allegation of non-receipt. As the showing presented is insufficient to establish unavoidable delay within the meaning of 35 U.S.C. § 133 and 37 CFR 1.137(a), the petition will be dismissed.

ALTERNATIVE VENUE

Petitioner may wish to consider filing a renewed petition under 37 CFR 1.137(b),[4] which now provides that where the delay in reply was unintentional, a petition may be filed to revive an abandoned application or a lapsed patent pursuant to 37 CFR 1.137(b).

The filing of a petition under the unintentional standard cannot be intentionally delayed

---

[3]M.P.E.P. § 711.03(c); See Notice entitled "Withdrawing the Holding of Abandonment When Office Actions Are Not Received," 1156 O.G. 53 (November 16, 1993).

[4]Effective December 1, 1997, the provisions of 37 CFR 1.137(b) now provide that where the delay in reply was unintentional, a petition may be filed to revive an abandoned application or a lapsed patent pursuant to 37 CFR 1.137(b). A grantable petition filed under the provisions of 37 CFR 1.137(b) must be accompanied by:

(1) the required reply, unless previously filed. In a nonprovisional application abandoned for failure to prosecute, the required reply may be met by the filing of a continuing application. In a nonprovisional application filed on or after June 8, 1995, and abandoned for failure to prosecute, the required reply may also be met by the filing of a request for continued examination in compliance with § 1.114. In an application or patent, abandoned or lapsed for failure to pay the issue fee or any portion thereof, the required reply must be the payment of the issue fee or any outstanding balance thereof. In an application abandoned for failure to pay the publication fee, the required reply must include payment of the publication fee.

(2) the petition fee as set forth in 37 CFR 1.17(m);

(3) a statement that the entire delay in filing the required reply from the due date for the reply until the filing of a grantable petition pursuant to 37 CFR 1.137(b) was unintentional. The Commissioner may required additional information where there is a question whether the delay was unintentional; and

(4) any terminal disclaimer (and fee as set forth in 37 CFR 1.20(d)) required pursuant to 37 CFR 1.137©)).

and therefore should be filed promptly. A person seeking revival due to unintentional delay cannot make a statement that the delay was unintentional unless the entire delay, including the delay from the date it was discovered that the application was abandoned until the filing of the petition to revive under 37 CFR 1.137(b), was unintentional. A statement that the delay was unintentional is not appropriate if petitioner intentionally delayed the filing of a petition for revival under 37 CFR 1.137(b).

Further correspondence with respect to this matter should be addressed as follows:

By mail: Mail Stop Petitions
Commissioner for Patents
P.O. Box 1450
Alexandria VA 22313-1450

By FAX: (703)308-6916
Attn: Office of Petitions

Telephone inquiries concerning this matter may be directed to the undersigned Petitions Attorney at (571) 272-3212.

Patricia Faison-Ball

Patricia Faison-Ball
Senior Petitions Attorney
Office of Petitions

UNITED STATES PATENT AND TRADEMARK OFFICE

Commissioner for Patents
United States Patent and Trademark Office
P.O. Box 1450
Alexandria, VA 22313-1450
www.uspto.gov

RICHARD COALE WILLSON JR
3205 HARVEST MOON DR
STE 200
PALM HARBOR FL 34683-2127

COPY MAILED

JUN 2 9 2005

OFFICE OF PETITIONS

In re Application of :
Richard Coale Willson et al. : DECISION ON PETITION
Application No. 10/737,403 :
Filed: December 16, 2003 :
Attorney Docket No.: 015AUS/UH2229 :

This is a decision on the renewed petition under 37 CFR 137(a)[1] and 37 CFR 1.137(b)[2], , filed April 19, 2005, to revive the above-identified application.

The petition under 37 CFR 1.137(a) is **DISMISSED**.

---

[1]A grantable petition to revive an abandoned application under 37 CFR 1.137(a) must be accompanied by:

(1) the required reply, unless previously filed. In a nonprovisional application abandoned for failure to prosecute, the required reply may be met by the filing of a continuing application. In a nonprovisional application filed on or after June 8, 1995, and abandoned for failure to prosecute, the required reply may also be met by the filing of a request for continued examination in compliance with § 1.114. In an application or patent, abandoned or lapsed for failure to pay the issue fee or any portion thereof, the required reply must be the payment of the issue fee or any outstanding balance thereof;
(2) the petition fee as set forth in § 1.17(l);
(3) a showing to the satisfaction of the Commissioner that the entire delay in filing the required reply from the due date for the reply until the filing of a grantable petition pursuant to this paragraph was unavoidable; and
(4) any terminal disclaimer (and fee as set forth in § 1.20(d)) required pursuant to paragraph (c) of this section.

[2]Effective December 1, 1997, the provisions of 37 CFR 1.137(b) now provide that where the delay in reply was unintentional, a petition may be filed to revive an abandoned application or a lapsed patent pursuant to 37 CFR 1.137(b).

A grantable petition filed under the provisions of 37 CFR 1.137(b) must be accompanied by:

(1) the required reply, unless previously filed. In a nonprovisional application abandoned for failure to prosecute, the required reply may be met by the filing of a continuing application. In a nonprovisional application filed on or after June 8, 1995, and abandoned for failure to prosecute, the required reply may also be met by the filing of a request for continued examination in compliance with § 1.114. In an application or patent, abandoned or lapsed for failure to pay the issue fee or any portion thereof, the required reply must be the payment of the issue fee or any outstanding balance thereof. In an application abandoned for failure to pay the publication fee, the required reply must include payment of the publication fee.

(2) the petition fee as set forth in 37 CFR 1.17(m);

(3) a statement that the entire delay in filing the required reply from the due date for the reply until the filing of a grantable petition pursuant to 37 CFR 1.137(b) was unintentional. The Commissioner may required additional information where there is a question whether the delay was unintentional; and

(4) any terminal disclaimer (and fee as set forth in 37 CFR 1.20(d)) required pursuant to 37 CFR 1.137©).

The petition under 37 CFR 1.137(b) is **GRANTED**.

This application became abandoned on June 20, 2004, for failure to timely respond to the Notice to Comply with Requirements for Patent Applications Containing Nucleotide Sequence and/or Amino Acid Sequence Disclosures ("Notice") mailed April 19, 2004 which set a two (2) month period for reply. Accordingly, a Notice of Abandonment was mailed January 6, 2005. A petition under 37 CFR 1.137(a) filed January 20, 2005 was dismissed in a decision mailed February 25, 2005 because while petitioner asserted that the "Notice" was never received and thus that the delay in responding was unavoidable, petitioner did not provide corroborating evidence of non-receipt.

Comes now petitioner with the instant renewed petition under 37 CFR 1.137(a) and 1.137(b), claiming that the April 19, 2004 Notice was in fact received and that a reply was timely filed on June 18, 2004 by facsimile transmission.

The Petitioner has not however provided proof that the response was timely filed by facsimile transmission. The cover letter of the remarks includes what purports to be a certificate of mail. It is not clear if petitioner is relying on that piece of information as the basis for the claim that the response was timely filed or not but, if it is, that certificate of mail is defective and thus cannot serve as proof of filing. Note: inter alia, the fax number for the USPTO is incorrect and if the response was faxed to 713-872-9306, it would not have reached this agency.

The showing of record is still inadequate to establish unavoidable delay within the meaning of 37 CFR 1.137(a) and the petition under 37 CFR 1.137(a), will be dismissed. In view thereof, and in view of the authorization to charge deposit account no. 20-0336, this petition is also treated under 37 CFR 1.137(b). The deposit account will be charged in the amount of $750.00 for the petition fee.

This matter is being referred back to the Office of Initial Patent Examination for further pre-examination processing in view of the amendments to the specification canceling all references to CDs, compact discs or sequence listings.

Telephone inquiries concerning this matter may be directed to the undersigned Petitions Attorney at (571) 272-3212.

Patricia Faison-Ball

Patricia Faison-Ball
Senior Petitions Attorney
Office of Petitions

UNITED STATES PATENT AND TRADEMARK OFFICE

Commissioner for Patents
United States Patent and Trademark Office
P.O. Box 1450
Alexandria, VA 22313-1450
www.uspto.gov

RICHARD COALE WILLSON JR
3205 HARVEST MOON DR
STE 200
PALM HARBOR FL 34683-2127

COPY MAILED

SEP 10 2007

OFFICE OF PETITIONS

In re Application of
Richard Coale Willson III, et al.
Application No. 10/737,403
Filed: December 16, 2003
Attorney Docket No. 015AUS

ON PETITION

This is a decision on the petition filed August 11, 2007 under 37 CFR 1.181 to withdraw the holding of abandonment.

The petition to withdraw the holding of abandonment is **GRANTED**.

The application was held abandoned on February 9, 2007 for failure to file a timely response to the Restriction Requirement mailed January 8, 2007, which set the longer of one (1) month or thirty (30) days for reply. No extensions of time in accordance with 37 CFR 1.136(a) were obtained. Accordingly, a Notice of Abandonment was mailed August 7, 2007.

Petitioner asserts that a proper response, was filed via facsimile transmission on January 18, 2007. In support, petitioner submits a copy of the reply said to have been filed, which includes a certificate of facsimile transmission pursuant to 37 CFR 1.8.

The evidence submitted corroborates a timely response to the Restriction Requirement

Accordingly, the holding of abandonment is withdrawn and the Notice of Abandonment is vacated. No petition fee Is due and none has been charged.

This matter is being referred to Technology Center 1637 for appropriate action on the response filed January 18, 2007, a copy of which was submitted August 11, 2007 with the instant petition.

Telephone inquiries concerning this matter should be directed to the undersigned Petitions Attorney at (571) 272-3212.

Patricia Faison-Ball
Senior Petitions Attorney
Office of Petitions

UNITED STATES PATENT AND TRADEMARK OFFICE

Commissioner for Patents
United States Patent and Trademark Office
P.O. Box 1450
Alexandria, VA 22313-1450
www.uspto.gov

ORUM & ROTH
53 W. JACKSON BLVD
CHICAGO IL 60604

COPY MAILED

OCT 30 2006

OFFICE OF PETITIONS

In re Application of :
Eiichi Terada :
Application No. 10/737,417 : DECISION ON PETITION
Filed: December 15, 2003 : TO WITHDRAW
Attorney Docket No. 13693 : FROM RECORD
:

This is a decision on the Request to Withdraw as attorney or agent of record under 37 C.F.R. § 1.36(b), filed July 16, 2006.

The request is **APPROVED**.

A grantable request to withdraw as attorney/agent of record must be signed by every attorney/agent seeking to withdraw or contain a clear indication that one attorney is signing on behalf of another/others. A request to withdraw will not be approved unless at least 30 (thirty) days would remain between the date of approval and the later of the expiration date of a time to file a response or the expiration date of the maximum time period which can be extended under 37 C.F.R. § 1.136(a).

The request was signed by Catherine L. Glemrich attorney/agent of record on behalf of herself.

Catherine L. Glemrich has been withdrawn as attorney or agent of record.

There is an outstanding Office action mailed August 9, 2006 that requires a reply from the applicant.

All future communications from the Office will continue to be directed to the above-listed address until otherwise properly notified by the applicant.

Telephone inquiries concerning this decision should be directed to Charles Smoot at 571-272-3299.

for David Bucci
Petitions Examiner
Office of Petitions

UNITED STATES PATENT AND TRADEMARK OFFICE

Commissioner for Patents
United States Patent and Trademark Office
P.O. Box 1450
Alexandria, VA 22313-1450
www.uspto.gov

THE PROCTER & GAMBLE COMPANY
INTELLECTUAL PROPERTY DIVISION - WEST BLDG.
WINTON HILL BUSINESS CENTER - BOX 412
6250 CENTER HILL AVENUE
CINCINNATI, OH 45224

COPY MAILED

MAR 0 5 2008

OFFICE OF PETITIONS

In re Application of	:	
John Joseph Curro, et al.	:	
Application No. 10/737,430	:	DECISION GRANTING PETITION
Filed: December 16, 2003	:	UNDER 37 CFR 1.313(c)(2)
Attorney Docket No. 9313R	:	

This is a decision on the petition under 37 CFR 1.313(c)(2), filed February 29, 2008, to withdraw the above-identified application from issue after payment of the issue fee.

The petition is **GRANTED**.

The above-identified application is withdrawn from issue for consideration of a submission under 37 CFR 1.114 (request for continued examination). *See* 37 CFR 1.313(c)(2).

Petitioner is advised that the issue fee paid on January 29, 2008 cannot be refunded. If, however, this application is again allowed, petitioner may request that it be applied towards the issue fee required by the new Notice of Allowance.[1]

Telephone inquiries regarding this decision should be directed to undersigned at (571) 272-1642.

This application is being referred to Technology Center AU 1794 for processing of the request for continued examination under 37 CFR 1.114 and for consideration of the concurrently filed reply and information disclosure statement.

April M. Wise
Petitions Examiner
Office of Petitions

[1] *The request to apply the issue fee to the new Notice may be satisfied by completing and returning the new Part B – Fee(s) Transmittal Form (along with any balance due at the time of submission). Petitioner is advised that the Issue Fee Transmittal Form must be completed and timely submitted to avoid abandonment of the application.*

UNITED STATES PATENT AND TRADEMARK OFFICE

Commissioner for Patents
United States Patent and Trademark Office
P.O. Box 1450
Alexandria, VA 22313-1450
www.uspto.gov

MILLENNIUM PHARMACEUTICALS, INC.
40 Landsdowne Street
CAMBRIDGE MA 02139

COPY MAILED

APR 16 2007

OFFICE OF PETITIONS

In re Application of
Lightcap et al.
Application No. 10/737,450
Filed: December 16, 2003
Attorney Docket: MPI02-207P1RNOMNIM

ON PETITION

This is a decision on the petition under 37 CFR 1.181 to withdraw the holding of abandonment, filed February 12, 2007.

The petition to withdraw the holding of abandonment is **GRANTED**.

This above-identified application became abandoned for failure to timely file a reply to an Restriction Requirement mailed June 21, 2006. The Office Action set a one (1) month shortened statutory period for reply. No extensions of time were obtained under the provisions of 37 CFR 1.136(a). Accordingly, this application became abandoned on July 22, 2006. A Notice of Abandonment was mailed on January 22, 2007.

Petitioner asserts that the restriction requirement mailed on June 21, 2006 was never received. Petitioner attest that the Office Action was never received. Petitioner states a search of the file jacket and docket records confirms the Office Action was not received. In support of petitioner's contention, a copy of the docket records has been provided.

In view of the evidence submitted, the Notice of Abandonment is hereby vacated and the holding of abandonment is withdrawn.

This application is being forwarded to Art Unit 1642 for re-mailing of the Restriction Requirement. The one month extendable time period for reply will be set to run from the mailing date of the re-mailed Office Action.

Telephone inquiries concerning this matter should be directed to the undersigned at (571) 272-3215.

Charlema R. Grant

Charlema R. Grant
Petitions Attorney
Office of Petitions

UNITED STATES PATENT AND TRADEMARK OFFICE

UNITED STATES DEPARTMENT OF COMMERCE
United States Patent and Trademark Office
Address: COMMISSIONER FOR PATENTS
P.O. Box 1450
Alexandria, Virginia 22313-1450
www.uspto.gov

APPLICATION NUMBER	FILING OR 371 (c) DATE	FIRST NAMED APPLICANT	ATTY. DOCKET NO./TITLE
10/737,450	12/16/2003	Eric S. Lightcap	MPI02-207P1RNOMNIM

CONFIRMATION NO. 6830

OC000000023305788

OC000000023305788

Jean M. Silveri
Millennium Pharmaceuticals, Inc.
40 Landsdowne Street
Cambridge, MA 02139

Date Mailed: 04/09/2007

NOTICE REGARDING CHANGE OF POWER OF ATTORNEY

This is in response to the Power of Attorney filed 02/12/2007.

- The Power of Attorney to you in this application has been revoked by the assignee who has intervened as provided by 37 CFR 3.71. Future correspondence will be mailed to the new address of record(37 CFR 1.33).

C. Grant (OP)

Office of Initial Patent Examination (571) 272-4000, or 1-800-PTO-9199

NEW ATTORNEY/AGENT COPY

UNITED STATES PATENT AND TRADEMARK OFFICE

UNITED STATES DEPARTMENT OF COMMERCE
United States Patent and Trademark Office
Address: COMMISSIONER FOR PATENTS
P.O. Box 1450
Alexandria, Virginia 22313-1450
www.uspto.gov

APPLICATION NUMBER	FILING OR 371 (c) DATE	FIRST NAMED APPLICANT	ATTY. DOCKET NO./TITLE
10/737,450	12/16/2003	Eric S. Lightcap	MPI02-207P1RNOMNIM

CONFIRMATION NO. 6830

OC000000023305788

OC000000023305788

Jean M. Silveri
Millennium Pharmaceuticals, Inc.
40 Landsdowne Street
Cambridge, MA 02139

Date Mailed: 04/09/2007

NOTICE REGARDING CHANGE OF POWER OF ATTORNEY

This is in response to the Power of Attorney filed 02/12/2007.

- The Power of Attorney to you in this application has been revoked by the assignee who has intervened as provided by 37 CFR 3.71. Future correspondence will be mailed to the new address of record(37 CFR 1.33).

C. Grant (OP)

Office of Initial Patent Examination (571) 272-4000, or 1-800-PTO-9199
FORMER ATTORNEY/AGENT COPY

UNITED STATES PATENT AND TRADEMARK OFFICE

Commissioner for Patents
United States Patent and Trademark Office
P.O. Box 1450
Alexandria, VA 22313-1450
www.uspto.gov

LERNER, DAVID, LITTENBERG, KRUMHOLZ & MENTLIK
600 SOUTH AVENUE WEST
WESTFIELD NJ 07090

COPY MAILED

MAR 3 1 2008

OFFICE OF PETITIONS

In re Application of
John K. Edoga, et al.
Application No. 10/737,463
Filed: December 16, 2003
Attorney Docket No. EDRICH 3.0-002

DECISION ON PETITION TO WITHDRAW FROM RECORD

This is a decision on the Request to Withdraw as attorney or agent of record under 37 C.F.R. § 1.36(b), filed April 17, 2007.

The request is **NOT APPROVED**.

A grantable request to withdraw as attorney/agent of record must be signed by every attorney/agent seeking to withdraw or contain a clear indication that one attorney is signing on behalf of another/others. A request to withdraw will not be approved unless at least 30 (thirty) days would remain between the date of approval and the later of the expiration date of a time to file a response or the expiration date of the maximum time period which can be extended under 37 C.F.R. § 1.136(a).

All future c The Office cannot approve the request at this time since the reasons provided do not meet any of the conditions under the mandatory or permissive categories enumerated in 37 CFR 10.40. Section 10.40 of Title 37 of the Code of Federal Regulation states, "[a] practitioner shall not withdraw from employment in a proceeding before the Office without permission from the Office[.]" More specifically, 37 CFR 10.40 states, "[i]f paragraph (b) of this section is not applicable, a practitioner may not request permission to withdraw in matter pending before the Office unless such request or such withdrawal is" for one the permissive reasons listed in 37 CFR 10.40(c). The reasons set forth in the request, ***assignee has requested transfer of file***, do not meet any the conditions set forth in 37 CFR 10.40.

In order to request or take action in a patent matter, the assignee must establish its ownership of the patent to the satisfaction of the Director. In this regard, a Statement under 37 CFR 3.73(b) must have either: (i) documentary evidence of a chain of title from the original owner to the assignee (*e.g.*, copy of an executed assignment), and a statement affirming that the documentary evidence of the chain of title from the original owner to the assignee was or concurrently is being submitted for recordation pursuant to § 3.11; or (ii) a statement specifying where documentary

evidence of a chain of title from the original owner to the assignee is recorded in the assignment records of the Office (*e.g.*, reel and frame number).

All further communications from the Office will continue to be directed to the above-listed address until otherwise notified by applicant.

Telephone inquiries concerning this decision should be directed to Terri Williams at 571-272-2991.

T. Williams

Terri Williams
Petitions Examiner
Office of Petitions

cc: **JOHN K. EDOGA, M.D.**
EDRICH HEALTH TECHNOLOGIES, INC.
177 MADISON AVENUE
MORRISTOWN, NJ 07960

UNITED STATES PATENT AND TRADEMARK OFFICE

Commissioner for Patents
United States Patent and Trademark Office
P.O. Box 1450
Alexandria, VA 22313-1450
www.uspto.gov

LERNER, DAVID, LITTENBERG,
KRUMHOLZ & MENTLIK
600 SOUTH AVENUE WEST
WESTFIELD, NJ 07090

COPY MAILED

OCT 31 2007

OFFICE OF PETITIONS

In re Application of	:	
John K. Edoga et al	:	
Application No. 10/737,466	:	DECISION GRANTING PETITION
Filed: December 16, 2003	:	UNDER 37 CFR 1.313(c)(2)
Attorney Docket No. EDRICH 3.0-005	:	

This is a decision on the petition, filed October 31, 2007, under 37 CFR 1.313(c)(2) to withdraw the above-identified application from issue after payment of the issue fee.

The petition is **GRANTED**.

The above-identified application is withdrawn from issue for consideration of a submission under 37 CFR 1.114 (request for continued examination). See 37 CFR 1.313(c)(2).

Petitioner is advised that the issue fee paid on October 15, 2007 in the above-identified application cannot be refunded. If, however, the above-identified application is again allowed, petitioner may request that it be applied towards the issue fee required by the new Notice of Allowance.[1]

Telephone inquiries should be directed to the undersigned at (571) 272-3218.

This matter is being referred to Technology Center AU 3731 for processing of the request for continued examination under 37 CFR 1.114 and for consideration of the Information Disclosure Statement.

Frances Hicks
Petitions Examiner
Office of Petitions

C:\Documents and Settings\fhicks\My Documents\470\Oct11\737466.wpd

---

[1] *The request to apply the issue fee to the new Notice may be satisfied by completing and returning the new Part B – Fee(s) Transmittal Form (along with any balance due at the time of submission). Petitioner is advised that the Issue Fee Transmittal Form **must** be completed and timely submitted to avoid abandonment.*

UNITED STATES PATENT AND TRADEMARK OFFICE

Commissioner for Patents
United States Patent and Trademark Office
P.O. Box 1450
Alexandria, VA 22313-1450
www.uspto.gov

MAILED

DEC 0 3 2004

Technology Center 2100

CARL I. BRUNDIDGE
ANTONELLI, TERRY, STOUT, & KRAUS, LLP
1300 NORTH SEVENTEENTH STREET
SUITE 1800
ARLINGTON, VA 22209-9889

In re Application of: Ito, et al.
Application No. 10/737,477
Filed: December 15, 2003
For: SECURITY METHOD AND SYSTEM FOR STORAGE SUBSYSTEM

DECISION ON PETITION TO MAKE SPECIAL (ACCELERATED EXAMINATION) UNDER M.P.E.P. §708.02 (VIII)

This is a response to the petition filed April 21, 2004, under 37 C.F.R. §1.102(d) and M.P.E.P. §708.02 (VIII): Accelerated Examination, to make the above-identified application special.

The Petition is **GRANTED**.

M.P.E.P. §708.02, Section VIII which sets out the prerequisites for a grantable petition for Accelerated Examination under 37 C.F.R. §1.102(d) states in relevant part:

A new application (one which has not received any examination by the examiner) may be granted special status provided that applicant (and this term includes applicant's attorney or agent) complies with each of the following items:

(a) Submits a petition to make special accompanied by the **fee set forth in 37 CFR 1.17(h)**;

(b) Presents all claims directed to a single invention, or if the Office determines that all the claims presented are not obviously directed to a single invention, will make an election without traverse as a prerequisite to the grant of special status;

(c) Submits a statement(s) that a pre-examination search was made, listing the field of search by class and subclass, publication, Chemical Abstracts, foreign patents, etc. The pre-examination search must be directed to the invention as claimed in the application for which special status is requested. A search made by a foreign patent office satisfies this requirement;

(d) Submits one copy each of the references deemed most closely related to the subject matter encompassed by the claims if said references are not already of record; and

(e) Submits a detailed discussion of the references, which discussion points out, with the particularity required by 37 CFR 1.111 (b) and (c), how the claimed subject matter is patentable over the references.

Petition to Make Special **GRANTED** since all the requirements for special status under M.P.E.P. §708.02, Section VIII have been met.

The application file is being forwarded to the Examiner for accelerated examination in accordance with the procedures set forth in M.P.E.P. §708.02, Section VIII. If the application is subsequently allowed, it will be given priority for printing. See M.P.E.P. §1309. Note that the Examiner has already issued a non-final action. Therefore, Applicant must file a "record" reply responsive to the examiner's first action. The reply at this stage, to be proper, must be restricted to the rejections, objections, and requirements made. Any amendment, which would require broadening the search field, will be treated as an improper reply. See M.P.E.P. §708.02, Section VIII (section (c) of the special examining procedures).

Brian L. Johnson
Special Program Examiner
Technology Center 2100
Computer Architecture, Software and Information Security
571-272-3595

12/1/04

HMJ: 11/30/04

UNITED STATES PATENT AND TRADEMARK OFFICE

COMMISSIONER FOR PATENTS
UNITED STATES PATENT AND TRADEMARK OFFICE
P.O. BOX 1450
ALEXANDRIA, VA 22313-1450
www.uspto.gov

SONNENSCHEIN NATH & ROSENTHAL, LLP
P.O. BOX 061080
WACKER DRIVE STATION, SEARS TOWER
CHICAGO, IL 60606-1080

COPY MAILED

JUN 30 2008

OFFICE OF PETITIONS

In re Application of :
Neumann, et. al. :
Application No. 10/737,486 : ON PETITION
Filed: December 16, 2003 :
Attorney Docket No. 60019610-0351 :

This is a decision on the petition under the unintentional provisions of 37 CFR 1.137(b), filed December 4, 2007, to revive the above-identified application.

The petition is **GRANTED**.

The above-identified application became abandoned November 23, 2007 for failure to timely submit a proper reply to the Notice of Allowance and Issue Fee Due (Notice) mailed August 22, 2007. The Notice set a three month statutory period of time for reply. Notice of Abandonment was mailed December 17, 2007

The petition satisfies the requirements of 37 CFR 1.137(b) in that petitioner has supplied (1) the reply in the form of submission of the issue fee and publication fee, (2) the petition fee of $770.00, and (3) a proper statement of unintentional delay.

The file does not indicate a change of address has been submitted, although the address given on the petition differs from the address of record. If appropriate, a change of address should be filed in accordance with MPEP 601.03. A courtesy copy of this decision is being mailed to the address given on the petition; however, the Office will mail all future correspondence solely to the address of record.

Telephone inquiries concerning this decision should be directed to the undersigned at (571) 272-3226.

This application is being referred to the Office Data Management for processing into a patent.

Andrea Smith
Petitions Examiner
Office of Petitions

cc: G. Harley Blosser
Sonnenschein, Nath and Rosenthal
One Metropolitan Square, Ste. 3000
St. Louis, MO 63102

UNITED STATES PATENT AND TRADEMARK OFFICE

Commissioner for Patents
United States Patent and Trademark Office
P.O. Box 1450
Alexandria, VA 22313-1450
www.uspto.gov

FISH & RICHARDSON PC
PO BOX 1022
MINNEAPOLIS MN 55440-1022

COPY MAILED

MAR 14 2007

OFFICE OF PETITIONS

In re Application of :
Michael Montagna, et al. :
Application No. 10/737,490 : DECISION ON PETITION
Filed: December 15, 2003 : TO WITHDRAW
Attorney Docket No. 14522-006001 : FROM RECORD
:

This is a decision on the Request to Withdraw as attorney or agent of record under 37 C.F.R. § 1.36(b) filed October 27, 2006.

The request is **DISMISSED** as moot.

A review of the file record indicates that the power of attorney to Fish & Richardson, PC has been revoked by the assignee of the patent application on January 8, 2007. Accordingly, the request to withdraw under 37 C.F.R. § 1.36(b) is moot.

All future communications from the Office will continue to be directed to the below-listed address until otherwise notified by applicant.

Telephone inquires concerning this decision should be directed to undersigned at 571-272-1642.

April M. Wise
Petitions Examiner
Office of Petitions

cc: BEYER WEAVER LLP
P.O. BOX 70250
OAKLAND, CA 94612-0250

UNITED STATES PATENT AND TRADEMARK OFFICE

UNITED STATES DEPARTMENT OF COMMERCE
United States Patent and Trademark Office
Address: COMMISSIONER FOR PATENTS
P.O. Box 1450
Alexandria, Virginia 22313-1450
www.uspto.gov

APPLICATION NUMBER	FILING OR 371 (c) DATE	FIRST NAMED APPLICANT	ATTY. DOCKET NO./TITLE
10/737,490	12/15/2003	Michael Montagna	14522-006001

CONFIRMATION NO. 5972

26181
FISH & RICHARDSON P.C.
PO BOX 1022
MINNEAPOLIS, MN 55440-1022

OC000000022853079
OC000000022853079

Date Mailed: 03/12/2007

NOTICE REGARDING CHANGE OF POWER OF ATTORNEY

This is in response to the Power of Attorney filed 10/27/2006.

- The Power of Attorney to you in this application has been revoked by the assignee who has intervened as provided by 37 CFR 3.71. Future correspondence will be mailed to the new address of record(37 CFR 1.33).

Office of Initial Patent Examination (571) 272-4000, or 1-800-PTO-9199
FORMER ATTORNEY/AGENT COPY

UNITED STATES PATENT AND TRADEMARK OFFICE

Commissioner for Patents
United States Patent and Trademark Office
P.O. Box 1450
Alexandria, VA 22313-1450
www.uspto.gov

David Fairbairn
Kinney and Lange, PA
The Kinney And Lange Building
312 South Third Street
Minneapolis, MN 55415-1002

COPY MAILED

JAN 0 2 2008

OFFICE OF PETITIONS

In re Patent No. 7,233,457 :
Issue Date: June 19, 2007 :
Application No. 10/737,491 : ON PETITION
Filed: December 16, 2003 :
Patentee(s): Alan B. Johnston, et. al. :

This is a decision on the request for Certificate of Correction, filed July 30, 2007, which is being treated as a request under 37 CFR 3.81[1], to correct the assignee data on the front page of the above-identified patent by way of a Certificate of Correction.

It is not apparent whether the person signing the instant petition was given a power of attorney or authorization of agent to prosecute the above-identified application. However, in accordance with 37 CFR 1.34(a), the signature appearing on the petition shall constitute a representation to the United States Patent and Trademark Office that he/she is authorized to represent the particular party in whose behalf he/she acts.

Additionally, since the processing fee of $130 is required for treatment of the present request, that fee has been charged to petitioner's deposit account, as authorized.

Since the requirements of 37 CFR 3.81 have been met, the request under 37 CFR 3.81 is **GRANTED**.

The Certificates of Correction Branch will be notified of this decision granting the petition under 37 CFR 3.81(b) and directing issuance of the requested Certificate of Correction.

Telephone inquiries concerning this decision may be directed to the undersigned at (571) 272-3226. Inquiries regarding the issuance of a Certificate of Correction should be directed to the Certificates of Correction Branch at (703) 305-8309.

Andrea Smith
Petitions Examiner
Office of Petitions

[1] *See* MPEP 1309, subsection II; and Official Gazette of June 22, 2004.

UNITED STATES PATENT AND TRADEMARK OFFICE

Commissioner for Patents
United States Patent and Trademark Office
P.O. Box 1450
Alexandria, VA 22313-1450
www.uspto.gov

MEDTRONIC, INC.
710 MEDTRONIC PARK
MINNEAPOLIS MN 55432-9924

COPY MAILED

MAR 3 0 2007

OFFICE OF PETITIONS

In re Application of :
Shafer, et al. :
Application No. 10/737,493 : DECISION ON PETITION
Filed: December 16, 2003 :
Attorney Docket No. P-9091.05 :

This is a decision on the petition under 37 CFR 1.182, filed, April 19, 2004, to change the name of inventor "Lisa L. Whalen" to – "Lisa L. Shafer" --.

The petition is **GRANTED**.

Office records have been updated to reflect the inventor's change of name. An updated Filing Receipt, which reflected the inventor's change of name, was previously mailed on April 28, 2004.

Any questions concerning this matter may be directed to the undersigned at (571) 272-3230. Any questions concerning the examination procedures or status of the application should be directed to the Technology Center.

This application is being returned to Technology Center AU 3766.

Shirene Willis Brantley
Senior Petitions Attorney
Office of Petitions

UNITED STATES PATENT AND TRADEMARK OFFICE

Commissioner for Patents
United States Patent and Trademark Office
P.O. Box 1450
Alexandria, VA 22313-1450
www.uspto.gov

COPY MAILED

OCT 0 4 2006

OFFICE OF PETITIONS

COOLEY GODWARD, LLP
3000 EL CAMINO REAL
5 PALO ALTO SQUARE
PALO ALTO CA 94306

In re Application of	:	
Teunen	:	
Application No. 10/737,505	:	DECISION ON PETITION
Filed: December 15,2003	:	TO WITHDRAW
Attorney Docket No. VOCE-001/00US	:	FROM RECORD
	:	

This is a decision on the Request to Withdraw as attorney or agent of record under 37 C.F.R. § 1.36(b), filed May 1, 2006.

The request is **APPROVED**.

A grantable request to withdraw as attorney/agent of record must be signed by every attorney/agent seeking to withdraw or contain a clear indication that one attorney is signing on behalf of another/others. A request to withdraw will not be approved unless at least 30 (thirty) days would remain between the date of approval and the later of the expiration date of a time to file a response or the expiration date of the maximum time period which can be extended under 37 C.F.R. § 1.136(a).

The request was signed by William S. Galliani on behalf of all attorneys of record who are associated with customer No. 23419.

All attorneys/agents associated with the Customer Number 23419 have been withdrawn.

Applicant is reminded that there is no attorney of record at this time.

The request to change the correspondence of record is not acceptable as the requested correspondence address is not that of: (1) the first named signing inventor; or (2) an intervening assignee of the entire interest under 37 C.F.R 3.71. All future communications from the Office will be directed to the first named signing inventor at the first copied address below until otherwise properly notified by the applicant.

In order to request or take action in a patent matter, the assignee must establish its ownership of the patent to the satisfaction of the Director. In this regard, a Statement under 37 CFR 3.73(b) must have either: (i) documentary evidence of a chain of title from the original owner to the assignee (*e.g.*, copy of an executed assignment), and a statement affirming that the documentary evidence of the chain of title from the original owner to the assignee was or concurrently is being submitted for recordation pursuant to § 3.11; or (ii) a statement specifying where documentary evidence of a chain of title from the original owner to the assignee is recorded in the assignment records of the Office (*e.g.*, reel and frame number).

Telephone inquiries concerning this decision should be directed to April Wise at 571-272-1642.

April M. Wise
Petitions Examiner
Office of Petitions

cc: REMCO TEUNEN
783 ROBLE AVENUE
#4
MENLO, CA 94025

cc: CHARLES GOTLIEB
INNOVATION PARTNERS
540 UNIVERSITY AVENUE
SUITE 300
PALO ALTO, CA 94301

UNITED STATES PATENT AND TRADEMARK OFFICE

UNITED STATES DEPARTMENT OF COMMERCE
United States Patent and Trademark Office
Address: COMMISSIONER FOR PATENTS
P.O. Box 1450
Alexandria, Virginia 22313-1450
www.uspto.gov

APPLICATION NUMBER	FILING OR 371 (c) DATE	FIRST NAMED APPLICANT	ATTY. DOCKET NO./TITLE
10/737,505	12/15/2003	Remco Teunen	VOCE-001/00US

CONFIRMATION NO. 5414

OC000000020647664

OC000000020647664

23419
COOLEY GODWARD, LLP
3000 EL CAMINO REAL
5 PALO ALTO SQUARE
PALO ALTO, CA 94306

Date Mailed: 09/29/2006

NOTICE REGARDING CHANGE OF POWER OF ATTORNEY

This is in response to the Power of Attorney filed 05/01/2006.

- The withdrawal as attorney in this application has been accepted. Future correspondence will be mailed to the new address of record. 37 CFR 1.33.

April M Wise

APRIL M WISE
OP (571) 272-1642

FORMER ATTORNEY/AGENT COPY

UNITED STATES PATENT AND TRADEMARK OFFICE

Commissioner for Patents
United States Patent and Trademark Office
P.O. Box 1450
Alexandria, VA 22313-1450
www.uspto.gov

TOWNSEND AND TOWNSEND AND CREW, LLP
TWO EMBARCADERO CENTER
EIGHTH FLOOR
SAN FRANCISCO, CA 94111-3834

COPY MAILED

JUL 25 2005

OFFICE OF PETITIONS

In re Application of :
William R. Cockayne :
Application No. 10/737,529 : ON PETITION
Filed: December 15, 2003 :
Attorney Docket No. 019656-001330US :

This is a decision on the petition under 37 CFR 1.137(b), filed by May 12, 2005, to revive the above-identified application.

The petition is **GRANTED**.

The application became abandoned for failure to timely respond to a Notice to File Missing Parts mailed September 1, 2004. The notice required the statutory basic filing fee, additional claim fees, an oath or declaration under 37 CFR 1.63 and the requisite surcharge under 37 CFR 1.16(e). A Notice of Abandonment was mailed on May 11, 2005. In response, on May 12, 2005, the present petition was filed.

The petition is found to comply with the requirements of 37 CFR 1.137(b).

The application is being referred to the Office of Initial Patent Examination (OIPE) for further processing using the declaration filed May 12, 2005.

Telephone inquires related to this decision should be directed to the undersigned at (571) 272-3204. Telephone inquiries related to OIPE processing should be directed to their hotline at (703) 308-1202.

Sherry D. Brinkley
Petitions Examiner
Office of Petitions
Office of the Deputy Commissioner
for Patent Examination Policy

UNITED STATES PATENT AND TRADEMARK OFFICE

Commissioner for Patents
United States Patent and Trademark Office
P.O. Box 1450
Alexandria, VA 22313-1450
www.uspto.gov

R REAMS GOODLOE, JR. & R. REAMS GOODLOE, P.S.
24722 104TH AVENUE SE
SUITE 102
KENT, WA 98030-5322

COPY MAILED

MAR 31 2008

OFFICE OF PETITIONS

In re Application of :
William J. Boyer, Jr., et al. :
Application No. 10/737,531 : DECISION ON PETITION
Filed: December 15, 2003 : TO WITHDRAW
Attorney Docket No. AP0-3102-U : FROM RECORD
:

This is a decision on the Request to Withdraw as attorney or agent of record under 37 C.F.R. § 1.36(b), filed December 20, 2005 and February 19, 2008.

The request is **APPROVED**.

A grantable request to withdraw as attorney/agent of record must be signed by every attorney/agent seeking to withdraw or contain a clear indication that one attorney is signing on behalf of another/others. A request to withdraw will not be approved unless at least 30 (thirty) days would remain between the date of approval and the later of the expiration date of a time to file a response or the expiration date of the maximum time period which can be extended under 37 C.F.R. § 1.136(a).

The request was signed by R. Reams Godloe, Jr. on behalf of all attorneys of record who are associated with customer No. 20793.

All attorneys/agents associated with the Customer Number 20793 have been withdrawn.

Applicant is reminded that there is no attorney of record at this time.

All future correspondence will be directed to the first named inventor William J. Boyer, Jr. at the address indicated below.

In order to request or take action in a patent matter, the assignee must establish its ownership of the patent to the satisfaction of the Director. In this regard, a Statement under 37 CFR 3.73(b) must have either: (i) documentary evidence of a chain of title from the original owner to the assignee (*e.g.*, copy of an executed assignment), and a statement affirming that the documentary evidence of the chain of title from the original owner to the assignee was or concurrently is being submitted for

recordation pursuant to § 3.11; or (ii) a statement specifying where documentary evidence of a chain of title from the original owner to the assignee is recorded in the assignment records of the Office (*e.g.*, reel and frame number).

There is an outstanding Office action mailed January 25, 2005 that requires a reply from the applicant.

Telephone inquiries concerning this decision should be directed to undersigned at 571-272-1642.

April M. Wise
Petitions Examiner
Office of Petitions

cc: WILLIAM J. BOYER, JR.
8667 ZIRCON DRIVE, SW
LAKEWOOD, WA 94898

cc: ROBERT RAY HENSON
21111 55TH AVENUE
COURT EAST
SPANAWAY, WA 98387

UNITED STATES PATENT AND TRADEMARK OFFICE

UNITED STATES DEPARTMENT OF COMMERCE
United States Patent and Trademark Office
Address: COMMISSIONER FOR PATENTS
P.O. Box 1450
Alexandria, Virginia 22313-1450
www.uspto.gov

APPLICATION NUMBER	FILING OR 371(C) DATE	FIRST NAMED APPLICANT	ATTY. DOCKET NO./TITLE
10/737,531	12/15/2003	William J. Boyer JR.	AP0-3102-U

CONFIRMATION NO. 8926

POWER OF ATTORNEY NOTICE

20793
R REAMS GOODLOE, JR. & R. REAMS GOODLOE, P.S.
24722 104TH. AVENUE S.E.
SUITE 102
KENT, WA 98030-5322

OC000000029056831

Date Mailed: 03/25/2008

NOTICE REGARDING CHANGE OF POWER OF ATTORNEY

This is in response to the Power of Attorney filed 12/20/2005.

- The withdrawal as attorney in this application has been accepted. Future correspondence will be mailed to the new address of record. 37 CFR 1.33.

/amwise/

Office of Initial Patent Examination (571) 272-4000 or 1-800-PTO-9199

UNITED STATES PATENT AND TRADEMARK OFFICE

Commissioner for Patents
United States Patent and Trademark Office
P.O. Box 1450
Alexandria, VA 22313-1450
www.uspto.gov

Gardner Groff, P.C.
Paper Mill Village, Building 23
600 Village Trace
Suite 300
Marietta, GA 30067

FAX RECEIVED

SEP 2 0 2004

OFFICE OF PETITIONS

In re Application of :
Tai, Lisk and Hampton : DECISION ACCORDING STATUS
Application No. 10/737,533 : UNDER 37 CFR 1.47(a)
Filed: December 16, 2003 :
Attorney Docket No. 2C03.1-151 :

This is in response to the petition under 37 CFR 1.47(a), filed August 20, 2004. Petitioner obtained a three-month extension of time. Accordingly, the petition is timely filed.

The petition is granted.

Petitioner has shown that Ming-Kok Tai, the non-signing inventor, has refused to join in the filing of the above-identified application after having been presented with the application papers. Specifically, the statement of facts of Bradley K. Goff establishes that the inventor was mailed the application papers, including the specification, claims and drawings, but failed to respond to the request that he sign the declaration.

The above-identified application and papers have been reviewed and found in compliance with 37 CFR 1.47(a). This application is hereby accorded Rule 1.47(a) status. As provided in Rule 1.47(c), this Office will forward notice of this application's filing to the non-signing inventor at the address given in the present petition. Notice of the filing of this application will also be published in the Official Gazette.

The application is being referred to Technology Center Art Unit 3764 for examination in due course.

Telephone inquiries regarding this decision should be directed to the undersigned at (703) 306-5589.

Christina Tartera Donnell

Christina Tartera Donnell
Senior Petitions Attorney
Office of Petitions

UNITED STATES PATENT AND TRADEMARK OFFICE

UNITED STATES DEPARTMENT OF COMMERCE
United States Patent and Trademark Office
Address: COMMISSIONER FOR PATENTS
P.O. Box 1450
Alexandria, Virginia 22313-1450
www.uspto.gov

PHILIP S. JOHNSON
JOHNSON & JOHNSON
ONE JOHNSON & JOHNSON PLAZA
NEW BRUNSWICK, NJ 08933-7003

Mail Date: 04/20/2010

Applicant	: David Greg Anderson	: DECISION ON REQUEST FOR
Patent Number	: 7666188	: RECALCULATION of PATENT
Issue Date	: 02/23/2010	: TERM ADJUSTMENT IN VIEW
Appliction No	: 10/737,537	: OF WYETH AND NOTICE OF INTENT TO
Filed	: 12/16/2003	: ISSUE CERTIFICATE OF CORRECTION
		:

The Request for Recalculation is **GRANTED** to the extent indicated.

The patent term adjustment has been determined to be **1206** days. The USPTO will *sua sponte* issue a certificate of correction reflecting the amount of PTA days determined by the recalculation.

Prior to the issuance of the certificate of correction, the USPTO will afford patentee an opportunity to be heard and request reconsideration. Accordingly, patentee has **one month or thirty (30) days**, whichever is longer, to file a request for reconsideration of this patent term adjustment calculation. See 35 U.S.C. 154(b)(3)(B)(ii) and 37 CFR 1.322(a)(4). No extensions of time will be granted under 37 CFR 1.136.

Patentee should use document code PET.OP if electronically filing a request for reconsideration of this patent term adjustment calculation. The patentee must also include the information required by 37 CFR 1.705(b)(2) and the fee required by 37 CFR 1.18(e). If patentee does not file a timely request for reconsideration of this patent term adjustment calculation including the information required by 37 CFR 1.705(b)(2) and the fee required by 37 CFR 1.18(e), the USPTO will issue a certificate of correction reflecting the PTA determination noted above.

Patentee should be aware that in order to preserve the right to review in the United States District Court for the District of Columbia of the USPTO patent term adjustment determination, patentee must ensure that he or she also take the steps required under 35 U.S.C. 154(b)(4)(A) in a timely manner. Nothing in the request for recalculation should be construed as providing an alternative time frame for commencing a civil action under 35 U.S.C. 154(b)(4)(A).

Any questions concerning this decision should be directed to the Office of Patent Legal Administration at 571-272-7702.

UNITED STATES PATENT AND TRADEMARK OFFICE

UNITED STATES DEPARTMENT OF COMMERCE
United States Patent and Trademark Office
Address: COMMISSIONER FOR PATENTS
P.O. Box 1450
Alexandria, Virginia 22313-1450
www.uspto.gov

PHILIP S. JOHNSON
JOHNSON & JOHNSON
ONE JOHNSON & JOHNSON PLAZA
NEW BRUNSWICK, NJ 08933-7003

Mail Date: 04/20/2010

Applicant	: Richard C. Techiera	: DECISION ON REQUEST FOR
Patent Number	: 7648507	: RECALCULATION of PATENT
Issue Date	: 01/19/2010	: TERM ADJUSTMENT IN VIEW
Appliction No	: 10/737,538	: OF WYETH AND NOTICE OF INTENT TO
Filed	: 12/16/2003	: ISSUE CERTIFICATE OF CORRECTION
		:

The Request for Recalculation is **GRANTED** to the extent indicated.

The patent term adjustment has been determined to be **498** days. The USPTO will *sua sponte* issue a certificate of correction reflecting the amount of PTA days determined by the recalculation.

Prior to the issuance of the certificate of correction, the USPTO will afford patentee an opportunity to be heard and request reconsideration. Accordingly, patentee has **one month or thirty (30) days**, whichever is longer, to file a request for reconsideration of this patent term adjustment calculation. See 35 U.S.C. 154(b)(3)(B)(ii) and 37 CFR 1.322(a)(4). No extensions of time will be granted under 37 CFR 1.136.

Patentee should use document code PET.OP if electronically filing a request for reconsideration of this patent term adjustment calculation. The patentee must also include the information required by 37 CFR 1.705(b)(2) and the fee required by 37 CFR 1.18(e). If patentee does not file a timely request for reconsideration of this patent term adjustment calculation including the information required by 37 CFR 1.705(b)(2) and the fee required by 37 CFR 1.18(e), the USPTO will issue a certificate of correction reflecting the PTA determination noted above.

Patentee should be aware that in order to preserve the right to review in the United States District Court for the District of Columbia of the USPTO patent term adjustment determination, patentee must ensure that he or she also take the steps required under 35 U.S.C. 154(b)(4)(A) in a timely manner. Nothing in the request for recalculation should be construed as providing an alternative time frame for commencing a civil action under 35 U.S.C. 154(b)(4)(A).

Any questions concerning this decision should be directed to the Office of Patent Legal Administration at 571-272-7702.

UNITED STATES PATENT AND TRADEMARK OFFICE

COMMISSIONER FOR PATENTS
UNITED STATES PATENT AND TRADEMARK OFFICE
P.O. BOX 1450
ALEXANDRIA, VA 22313-1450
www.uspto.gov

JAMES M. SINGER
PEPPER HAMILTON LLP
ONE MELLON CENTER, 50TH FLOOR
500 GRANT STREET
PITTSBURGH PA 15219

COPY MAILED

DEC 15 2006

OFFICE OF PETITIONS

In re Application of	:	
Vagarali et al	:	
Application No. 10/737,541	:	DECISION DISMISSING PETITIONS
Filed: December 15, 2003	:	UNDER 37 CFR 1.78(a)(3)
Attorney Docket No. 131545	:	
(128346).41441	:	

This is a decision on the petition under 37 CFR § 1.78(a)(3), filed August 10, 2006, to accept an unintentionally delayed claim under 35 U.S.C. § 120 for the benefit of priority to the prior-filed nonprovisional application set forth in the concurrently filed amendment.

The petition is **DISMISSED**

A petition for acceptance of a claim for late priority under 37 CFR § 1.78(a)(3) is only applicable to those applications filed on or after November 29, 2000 and after the expiration of the period specified in 37 CFR § 1.78(a)(2)(ii). In addition, the petition under 37 CFR § 1.78(a)(3) must be accompanied by:

(1) the reference required by 35 U.S.C. § 120 and 37 CFR § 1.78(a)(2)(i) of the prior-filed application, unless previously submitted;

(2) the surcharge set forth in § 1.17(t); and

(3) a statement that the entire delay between the date the claim was due under 37 CFR § 1.78(a)(2)(ii) and the date the claim was filed was unintentional. The Director may require additional information where there is a question whether the delay was unintentional.

The petition does not comply with item (1).

37 CFR 1.78(a)(2)(i) requires that any nonprovisional application claiming the benefit of one or more prior-filed copending nonprovisional applications must contain or be amended to contain a reference to each such prior-filed application, identifying it by application number (consisting of the series code and serial number) and indicating the relationship of the applications. The relationship between the applications is whether the subject application is a continuation, divisional, or continuation-in-part of a prior-filed nonprovisional application. An example of a proper benefit claim is: "This application is a continuation of Application No. 10/---, filed---." A benefit claim that merely states: "This application claims the benefit of Application No. 10/---, filed---," does not comply with 37 CFR 1.78(a)(2)(i) since the proper relationship, which includes the type of continuing application, is not stated. Also, the status of each nonprovisional parent application (if it is patented or abandoned) should also be indicated, following the filing date of the parent nonprovisional application. *See* MPEP Section 201.11, Reference to Prior Nonprovisional Applications. The amendment fails to comply with the provisions of 37 CFR 1.78(a)(2)(i) and is therefore unacceptable.

Additionally, the amendment is not acceptable as drafted since it improperly incorporates by reference prior-filed Application No. 10/338,136. An incorporation by reference statement added after an application's filing date is not effective because no new matter can be added to an application after its filing date (*see* 35 U.S.C. § 132(a)). If an incorporation by reference statement is included in an amendment to the specification to add a benefit claim under 35 U.S.C. § 120 after the filing date of the application, the amendment would not be proper. When a benefit claim under 35 U.S.C. § 120 is submitted after the filing of an application, the reference to the prior application cannot include an incorporation by reference statement of the prior application. *See* Dart Industries v. Banner, 636 F.2d 684, 207 USPQ 273 (C.A.D.C. 1980). *Note* MPEP §§ 201.06(c) and 608.04(b).

Before the petition under 37 CFR §§ 1.78(a)(3) can be granted, a renewed petition and either an Application Data Sheet or a substitute amendment (complying with the provisions of 37 CFR 1.121 to correct the above matters are required.

Petitioner is also encouraged to note 37 CFR 1.4(c).

Further correspondence with respect to this matter should be addressed as follows:

By mail: Mail Stop PETITIONS
Commissioner for Patents
Post Office Box 1450
Alexandria, VA 22313-1450

By hand: Customer Service Window
Mail Stop Petitions
Randolph Building
401 Dulany Street
Alexandria, VA 22314

By fax: (571) 273-8300
ATTN: Office of Petitions

Any questions concerning this matter may be directed to the undersigned at (571) 272-3208.

Karen Creasy

Karen Creasy
Petitions Examiner
Office of Petitions

UNITED STATES PATENT AND TRADEMARK OFFICE

Commissioner for Patents
United States Patent and Trademark Office
P.O. Box 1450
Alexandria, VA 22313-1450
www.uspto.gov

JAMES M. SINGER
PEPPER HAMILTON LLP
ONE MELLON CENTER, 50TH FLOOR
500 GRANT STREET
PITTSBURGH, PA 15219

COPY MAILED

APR 25 2007

OFFICE OF PETITIONS

In re Application of :
Suresh Shankarappa Vagarali et al :
Application No. 10/737,541 : ON PETITION
Filed: December 15, 2003 :
Attorney Docket No. 131545 (128346).41441 :

This is a decision on the petition, filed April 24, 2007, under 37 CFR 1.313(c)(2) to withdraw the above-identified application from issue after payment of the issue fee. This is also a decision on the renewed petition under 37 CFR 1.78(a)(3), filed December 22, 2006, to accept an unintentionally delayed claim under 35 U.S.C. § 120 for the benefit of priority to the prior-filed nonprovisional applications set forth in the concurrently filed amendment.

The petitions are **GRANTED**.

As to the petition under 37 CFR 1.313(c)(2):

The above-identified application is withdrawn from issue for consideration of a submission under 37 CFR 1.114 (request for continued examination). See 37 CFR 1.313(c)(2).

Petitioner is advised that the issue fee paid on July 18, 2006 in the above-identified application cannot be refunded. If, however, the above-identified application is again allowed, petitioner may request that it be applied towards the issue fee required by the new Notice of Allowance.[1]

As to the petition under 37 CFR 1.78(a)(3):

A petition for acceptance of a claim for late priority under 37 CFR 1.78(a)(3) is only applicable to those applications filed on or after November 29, 2000. Further, the petition is appropriate only after the expiration of the period specified in 37 CFR

[1] The request to apply the issue fee to the new Notice may be satisfied by completing and returning the new Issue Fee Transmittal Form PTOL-85(b), which includes the following language thereon: "Commissioner for Patents is requested to apply the Issue Fee and Publication Fee (if any) or re-apply any previously paid issue fee to the application identified above." Petitioner is advised that, whether a fee is indicated as being due or not, the Issue Fee Transmittal Form **must** be completed and timely submitted to avoid abandonment. Note the language in bold text on the first page of the Notice of Allowance and Fee(s) Due (PTOL-85).

1.78(a)(2)(ii). In addition, the petition under 37 CFR 1.78(a)(3) must be accompanied by:

> **(1)** the reference required by 35 U.S.C. § 120 and 37 CFR 1.78(a)(2)(i) of the prior-filed application, unless previously submitted;[2]
> **(2)** the surcharge set forth in § 1.17(t); and
> **(3)** a statement that the entire delay between the date the claim was due under 37 CFR 1.78(a)(2)(ii) and the date the claim was filed was unintentional. The Commissioner may require additional information where there is a question whether the delay was unintentional.

The instant pending application was filed on December 15, 2003. A reference to the prior-filed nonprovisional applications has been included in an application data sheet and an amendment, as required by 37 CFR 1.78(a)(3).

The instant nonprovisional application was filed after November 29, 2000, and the claim for priority herein is submitted after expiration of the period specified in 37 CFR 1.78(a)(2)(ii). Also, the reference to the prior-filed applications was submitted during the pendency of the instant nonprovisional application, for which the claim for benefit of priority is sought. *See* 35 U.S.C. § 120. Accordingly, having found that the instant petition satisfies the conditions of 37 CFR 1.78(a)(3) for acceptance of an unintentionally delayed claim for priority under 35 U.S.C. § 120 , the petition to accept an unintentionally delayed claim of benefit to the prior-filed applications is granted.

The granting of the petition to accept the delayed benefit claim to the prior-filed applications under 37 CFR 1.78(a)(3) should not be construed as meaning that the instant application is entitled to the benefit of the prior-filed applications. In order for the instant application to be entitled to the benefit of the prior-filed applications, all other requirements under 35 U.S.C. § 120 and 37 CFR 1.78(a)(1) and (a)(2) must be met. Similarly, the fact that the corrected Filing Receipt accompanying this decision on petition includes the prior-filed applications should not be construed as meaning that applicant is entitled to the claim for benefit of priority to the prior-filed applications noted thereon. Accordingly, the examiner will, in due course, consider this benefit claim and determine whether the instant application is entitled to the benefit of the earlier filing date.

---

[2] Any nonprovisional application or international application designating the United States of America claiming the benefit of one or more prior-filed copending applications or international applications designating the United States of America must contain or be amended to contain a reference (amendment to the first line of the specification following the title or in an application data sheet (ADS) to each such prior-filed application, identifying it by application number (consisting of the series code and serial number) or international application number and international filing date filing date and indicating the relationship of the applications. Cross references to other related applications may be made when appropriate (*see* § 1.14).

A corrected Filing Receipt, accompanies this decision on petition.

Any inquiries concerning this decision may be directed to Karen Creasy at (571) 272-3208.

This application is being referred to Technology Center Art Unit 1754 for consideration by the examiner of the claim under 35 U.S.C. § 120 and 37 CFR 1.78(a)(2) for the benefit of the prior-filed nonprovisional applications.

Karen Creasy
Petitions Examiner
Office of Petitions

ATTACHMENT: Corrected Filing Receipt

UNITED STATES PATENT AND TRADEMARK OFFICE

UNITED STATES DEPARTMENT OF COMMERCE
United States Patent and Trademark Office
Address: COMMISSIONER FOR PATENTS
P.O. Box 1450
Alexandria, Virginia 22313-1450
www.uspto.gov

APPL NO.	FILING OR 371(c) DATE	ART UNIT	FIL FEE REC'D	ATTY.DOCKET NO	TOT CLMS	IND CLMS
10/737,541	12/15/2003	1754	1524	131545(128346).41441	38	2

CONFIRMATION NO. 5600

CORRECTED FILING RECEIPT

James M. Singer
Pepper Hamilton LLP
One Mellon Center, 50th Floor
500 Grant Street
Pittsburgh, PA 15219

OC000000023528469

Date Mailed: 04/25/2007

Receipt is acknowledged of this regular Patent Application. It will be considered in its order and you will be notified as to the results of the examination. Be sure to provide the U.S. APPLICATION NUMBER, FILING DATE, NAME OF APPLICANT, and TITLE OF INVENTION when inquiring about this application. Fees transmitted by check or draft are subject to collection. Please verify the accuracy of the data presented on this receipt. **If an error is noted on this Filing Receipt, please mail to the Commissioner for Patents P.O. Box 1450 Alexandria Va 22313-1450. Please provide a copy of this Filing Receipt with the changes noted thereon. If you received a "Notice to File Missing Parts" for this application, please submit any corrections to this Filing Receipt with your reply to the Notice. When the USPTO processes the reply to the Notice, the USPTO will generate another Filing Receipt incorporating the requested corrections (if appropriate).**

Applicant(s)

Suresh Shankarappa Vagarali, Columbus, OH;
Steven William Webb, Worthington, OH;
William Edwin Jackson, Cleveland, OH;
William Frank Banholzer, Niskayuna, NY;
Thomas Richard Anthony, Schenectady, NY;
George Rene Kaplan, Rye Brook, NY;

Assignment For Published Patent Application

General Electric Co.
Lazare Kaplan International, Inc.

Power of Attorney: The patent practitioners associated with Customer Number **21269**.

Domestic Priority data as claimed by applicant

This application is a CON of 10/338,136 01/08/2003 PAT 6,692,714
which is a CIP of 09/162,206 09/28/1998 ABN
and is a CIP of 08/966,642 11/10/1997 ABN
which is a CIP of 08/953,701 10/17/1997 ABN

Foreign Applications

If Required, Foreign Filing License Granted: 03/25/2004

The country code and number of your priority application, to be used for filing abroad under the Paris

Convention, is US10/737,541

Projected Publication Date: Not Applicable

Non-Publication Request: No

Early Publication Request: No

Title

HIGH PRESSURE/HIGH TEMPERATURE PRODUCTION OF COLORLESS AND FANCY-COLORED DIAMONDS

Preliminary Class

423

PROTECTING YOUR INVENTION OUTSIDE THE UNITED STATES

Since the rights granted by a U.S. patent extend only throughout the territory of the United States and have no effect in a foreign country, an inventor who wishes patent protection in another country must apply for a patent in a specific country or in regional patent offices. Applicants may wish to consider the filing of an international application under the Patent Cooperation Treaty (PCT). An international (PCT) application generally has the same effect as a regular national patent application in each PCT-member country. The PCT process **simplifies** the filing of patent applications on the same invention in member countries, but **does not result** in a grant of "an international patent" and does not eliminate the need of applicants to file additional documents and fees in countries where patent protection is desired.

Almost every country has its own patent law, and a person desiring a patent in a particular country must make an application for patent in that country in accordance with its particular laws. Since the laws of many countries differ in various respects from the patent law of the United States, applicants are advised to seek guidance from specific foreign countries to ensure that patent rights are not lost prematurely.

Applicants also are advised that in the case of inventions made in the United States, the Director of the USPTO must issue a license before applicants can apply for a patent in a foreign country. The filing of a U.S. patent application serves as a request for a foreign filing license. The application's filing receipt contains further information and guidance as to the status of applicant's license for foreign filing.

Applicants may wish to consult the USPTO booklet, "General Information Concerning Patents" (specifically, the section entitled "Treaties and Foreign Patents") for more information on timeframes and deadlines for filing foreign patent applications. The guide is available either by contacting the USPTO Contact Center at 800-786-9199, or it can be viewed on the USPTO website at http://www.uspto.gov/web/offices/pac/doc/general/index.html.

For information on preventing theft of your intellectual property (patents, trademarks and copyrights), you may wish to consult the U.S. Government website, http://www.stopfakes.gov. Part of a Department of Commerce initiative, this website includes self-help "toolkits" giving innovators guidance on how to protect intellectual property in specific countries such as China, Korea and Mexico. For questions regarding patent enforcement issues, applicants may call the U.S. Government hotline at 1-866-999-HALT (1-866-999-4158).

LICENSE FOR FOREIGN FILING UNDER
Title 35, United States Code, Section 184
Title 37, Code of Federal Regulations, 5.11 & 5.15

GRANTED

The applicant has been granted a license under 35 U.S.C. 184, if the phrase "IF REQUIRED, FOREIGN FILING LICENSE GRANTED" followed by a date appears on this form. Such licenses are issued in all applications where the conditions for issuance of a license have been met, regardless of whether or not a license may be required as set forth in 37 CFR 5.15. The scope and limitations of this license are set forth in 37 CFR 5.15(a) unless an earlier license has been issued under 37 CFR 5.15(b). The license is subject to revocation upon written notification. The date indicated is the effective date of the license, unless an earlier license of similar scope has been granted under 37 CFR 5.13 or 5.14.

This license is to be retained by the licensee and may be used at any time on or after the effective date thereof unless it is revoked. This license is automatically transferred to any related applications(s) filed under 37 CFR 1.53(d). This license is not retroactive.

The grant of a license does not in any way lessen the responsibility of a licensee for the security of the subject matter as imposed by any Government contract or the provisions of existing laws relating to espionage and the national security or the export of technical data. Licensees should apprise themselves of current regulations especially with respect to certain countries, of other agencies, particularly the Office of Defense Trade Controls, Department of State (with respect to Arms, Munitions and Implements of War (22 CFR 121-128)); the Bureau of Industry and Security, Department of Commerce (15 CFR parts 730-774); the Office of Foreign Assets Control, Department of Treasury (31 CFR Parts 500+) and the Department of Energy.

NOT GRANTED

No license under 35 U.S.C. 184 has been granted at this time, if the phrase "IF REQUIRED, FOREIGN FILING LICENSE GRANTED" DOES NOT appear on this form. Applicant may still petition for a license under 37 CFR 5.12, if a license is desired before the expiration of 6 months from the filing date of the application. If 6 months has lapsed from the filing date of this application and the licensee has not received any indication of a secrecy order under 35 U.S.C. 181, the licensee may foreign file the application pursuant to 37 CFR 5.15(b).

UNITED STATES PATENT AND TRADEMARK OFFICE

COMMISSIONER FOR PATENTS
UNITED STATES PATENT AND TRADEMARK OFFICE
P.O. BOX 1450
ALEXANDRIA, VA 22313-1450
www.uspto.gov

HUFFMAN LAW GROUP, P.C.
1900 MESA AVE.
COLORADO SPRINGS CO 80906

COPY MAILED

OCT 18 2006

OFFICE OF PETITIONS

Applicant: Pettey
Appl. No.: 10/737,556
Filing Date: December 16, 2003
Title: WORK QUEUE TO TCP/IP TRANSLATION
Pub. No.: US 2004/0128398 A1
Pub. Date: July 1, 2004

This is a decision on the request for corrected of patent application publication under 37 CFR 1.221(b), filed on April 19, 2005, for the above-identified application

The request is DISMISSED.

Applicant requests that the application be republished because the patent application publication contains a material error, as the publication does not include the preliminary amendment to the claims submitted on filing.

37 CFR 1.221(b) is applicable "only when the Office makes a material mistake which is apparent from Office records . . . Any request for a corrected publication or revised patent application publication other than provided as provided in paragraph (a) of this section must be filed within two months from the date of the patent application publication. This period is not extendable." A material mistake must affect the public's ability to appreciate the technical disclosure of the patent application publication, to determine the scope of the patent application publication, or to determine the scope of the provisional rights that an applicant may seek to enforce upon issuance of a patent.[1]

The request for corrected publication received on April 19, 2005, was not timely filed under 37 CFR 1.221(b).

The patent application publication does not include a mistake with respect to the preliminary amendment to the claims. The patent application publication does not include a mistake regarding the failure to include the preliminary amendment to the claims in the publication by

[1]Changes to Implement Eighteen-Month Publication of Patent Applications, 65 FR 57023, 57038 (Sept. 20, 2000), 1239 Off. Gaz. Pat. Office Notices 63, 75 (Oct. 10, 2000) (final rule).

the Office because patent application publications are not required to include preliminary amendments, according to 37 CFR 1.215(a)[2], which says the following, in part:

> (a) ... The patent application publication will be based upon the specification and drawings deposited on the filing date of the application, as well as the executed oath or declaration submitted to complete the application. **The patent application publication may also be based upon amendments to the specification (other than the abstract or the claims) that are reflected in a substitute specification under Sec. 1.125(b),** amendments to the abstract under Sec. 1.121(b), amendments to the claims that are reflected in a complete claim listing under Sec. 1.121(c), and amendments to the drawings under Sec. 1.121(d), provided that such substitute specification or amendment is submitted in sufficient time to be entered into the Office file wrapper of the application before technical preparations for publication of the application have begun. (emphasis added)

§ 1.215(c) says the following:

(c) At applicant's option, the patent application publication will be based upon the copy of the application (specification, drawings, and oath or declaration) as amended, provided that applicant supplies such a copy in compliance with the Office electronic filing system requirements within one month of the mailing date of the first Office communication that includes a confirmation number for the application, or fourteen months of the earliest filing date for which a benefit is sought under title 35, United States Code, whichever is later.

While the patent application publication may now include a preliminary amendment, the Office is not required to use the preliminary amendment. The Office changed the procedures for publication of patent applications so as to publish applications as amended, when possible. Until 2004, patent application publications were published as originally filed. See Patent Application Publications May Now Include Amendments, 1281 Off. Gaz. Pat. Office Notices 53 (April 13, 2004) and MPEP 1121. Applicant did not file the continuation application with only the desired set of claims. See Pre-Grant Publication Helpful Hint: File Continuation or Divisional Application with a New Specification and Copy of Oath or Declaration from Prior Application, 1251 Off. Gaz. Pat. Office Notices 54 (Oct. 9, 2001). The Office correctly published the application in accordance with 37 CFR 1.215(a).

Applicant is reminded of his duty to conduct a reasonable inquiry before filing a paper before the Office. See MPEP 410.

Applicants' request for a corrected patent application publication on April 19, 2005, may constitute a "failure to engage in reasonable efforts to conclude processing or examination of the application." See 1.704(c). This determination will be made on or after a mailing of a Notice of Allowance.

---

[2]Changes to Support Implementation of the United States Patent and Trademark Office 21st Century Strategic Plan; Final Rule, 69 FR 56482 (Sept. 21, 2004).

The applicant is advised that a "request for republication of an application previously published" may be filed under 37 CFR 1.221(a). Such a request for republication "must include a copy of the application in compliance with the Office's electronic filing system requirements and be accompanied by the publication fee set forth in § 1.18(d) and the processing fee set forth in § 1.17(i)." If the request for republication does not comply with the electronic filing system requirements, the republication will not take place and the publication fee set forth in § 1.18(d) will be refunded. The processing fee will be retained.

Any request for republication under 37 CFR 1.221(a), must be submitted via the EFS system and questions or request for reconsideration of the decision, should be addressed as follows:

By mail to: Mail Stop PGPUB
Commissioner for Patents
P.O. Box 1450
Alexandria, Va. 22313-1450

By facsimile: 571-273-8300

Inquiries relating to this matter may be directed to Mark O. Polutta at (571) 272-7709.

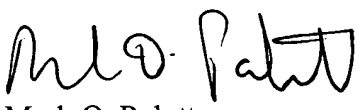

Mark O. Polutta
Office of Patent Legal Administration
Office of the Deputy Commissioner
for Patent Examination Policy

UNITED STATES PATENT AND TRADEMARK OFFICE

Commissioner for Patents
United States Patent and Trademark Office
P.O. Box 1450
Alexandria, VA 22313-1450
www.uspto.gov

ERIC ROBINSON
PMB 955
21010 SOUTHBANK STREET
POTOMAC FALLS, VA 20165

COPY MAILED

NOV 28 2007

OFFICE OF PETITIONS

In re Application of
Hiroko Yamazaki et al
Application No. 10/737,569
Filed: December 16, 2003
Attorney Docket No. 0756-7845

: DECISION GRANTING PETITION
: UNDER 37 CFR 1.313(c)(2)

This is a decision on the petition, filed November 26, 2007, under 37 CFR 1.313(c)(2) to withdraw the above-identified application from issue after payment of the issue fee.

The petition is **GRANTED**.

The above-identified application is withdrawn from issue for consideration of a submission under 37 CFR 1.114 (request for continued examination). See 37 CFR 1.313(c)(2).

Petitioner is advised that the issue fee paid on October 30, 2007 in the above-identified application cannot be refunded. If, however, the above-identified application is again allowed, petitioner may request that it be applied towards the issue fee required by the new Notice of Allowance.[1]

Telephone inquiries should be directed to the undersigned at (571) 272-3218.

This matter is being referred to Technology Center AU 2814 for processing of the request for continued examination under 37 CFR 1.114 and for consideration of the Information Disclosure Statement.

Frances Hicks
Petitions Examiner
Office of Petitions

C:\Documents and Settings\fhicks\My Documents\470\nov11\737569.wpd

---

[1] *The request to apply the issue fee to the new Notice may be satisfied by completing and returning the new Part B – Fee(s) Transmittal Form (along with any balance due at the time of submission). Petitioner is advised that the Issue Fee Transmittal Form **must** be completed and timely submitted to avoid abandonment.*

UNITED STATES PATENT AND TRADEMARK OFFICE

UNITED STATES DEPARTMENT OF COMMERCE
United States Patent and Trademark Office
Address: COMMISSIONER FOR PATENTS
P.O. Box 1450
Alexandria, Virginia 22313-1450
www.uspto.gov

BAKER BOTTS L.L.P.
2001 ROSS AVENUE
SUITE 600
DALLAS, TX 75201-2980

Mail Date: 04/20/2010

Applicant	: Mark Albert	: DECISION ON REQUEST FOR
Patent Number	: 7570586	: RECALCULATION of PATENT
Issue Date	: 08/04/2009	: TERM ADJUSTMENT IN VIEW
Appliction No	: 10/737,580	: OF WYETH AND NOTICE OF INTENT TO
Filed	: 12/16/2003	: ISSUE CERTIFICATE OF CORRECTION
		:

The Request for Recalculation is **GRANTED** to the extent indicated.

The patent term adjustment has been determined to be **1558** days. The USPTO will *sua sponte* issue a certificate of correction reflecting the amount of PTA days determined by the recalculation.

Prior to the issuance of the certificate of correction, the USPTO will afford patentee an opportunity to be heard and request reconsideration. Accordingly, patentee has **one month or thirty (30) days**, whichever is longer, to file a request for reconsideration of this patent term adjustment calculation. See 35 U.S.C. 154(b)(3)(B)(ii) and 37 CFR 1.322(a)(4). No extensions of time will be granted under 37 CFR 1.136.

Patentee should use document code PET.OP if electronically filing a request for reconsideration of this patent term adjustment calculation. The patentee must also include the information required by 37 CFR 1.705(b)(2) and the fee required by 37 CFR 1.18(e). If patentee does not file a timely request for reconsideration of this patent term adjustment calculation including the information required by 37 CFR 1.705(b)(2) and the fee required by 37 CFR 1.18(e), the USPTO will issue a certificate of correction reflecting the PTA determination noted above.

Patentee should be aware that in order to preserve the right to review in the United States District Court for the District of Columbia of the USPTO patent term adjustment determination, patentee must ensure that he or she also take the steps required under 35 U.S.C. 154(b)(4)(A) in a timely manner. Nothing in the request for recalculation should be construed as providing an alternative time frame for commencing a civil action under 35 U.S.C. 154(b)(4)(A).

Any questions concerning this decision should be directed to the Office of Patent Legal Administration at 571-272-7702.

UNITED STATES PATENT AND TRADEMARK OFFICE

COMMISSIONER FOR PATENTS
UNITED STATES PATENT AND TRADEMARK OFFICE
P.O. BOX 1450
ALEXANDRIA, VA 22313-1450
www.uspto.gov

BLACK LOWE & GRAHAM
701 FIFTH AVENUE
SUITE 4800
SEATTLE, WA 98104

COPY MAILED

DEC 15 2005

OFFICE OF PETITIONS

In re Application of :
Maynard L. Strangeland :
Application No. 10/737,585 : ON PETITION
Filed: December 16, 2003 :
Title of Invention: :
INDUCER TIP VORTEX SUPRESSOR :

This is in response to the Petition to Revive due to Unavoidable Abandonment Under 37 CFR 1.137(a), or Alternatively due to Unintentional Abandonment Under 37 CFR 1.137(b), and For Refund of Extension of Time Fees and/or to Reset Time for Response Pursuant to MPEP 710.06, December 2, 2005.

The petition under 37 CFR 1.137(a) is dismissed.
The petition under 37 CFR 1.137(b) is held in abeyance.

Any further petition to revive the above-identified application (under 37 CFR 1.137(a)), must be submitted within TWO (2) MONTHS from the mail date of this decision. Extensions of time under 37 CFR 1.136(a) are permitted. The reconsideration request should include a cover letter entitled "Request for Reconsideration of Petition under 37 CFR 1.137". This is **not** final agency action within the meaning of 5 U.S.C. § 704.

Background:

The above-identified application became abandoned for failure to timely and properly reply to the non-final Office action, mailed March 24, 2005. The Office action set a three (3) month period for reply. No reply having been received, the application became abandoned on June 25, 2005. The mailing of this Decision precedes the mailing of a Notice of Abandonment.

The instant petition

Applicant files the instant petition and asserts that the Patent Office was previously made aware of the correct address of the attorneys of record as a result of the filing of one or more Changes of Correspondence Address forms, and by official change of address associated with customer number of the attorney(s) of record.

Applicant also asserts that the Office had actual knowledge of the correct address in this application because the Assignment Recordation document was mailed to the correct address on July 2, 2004. Applicant notes that, while this date is after the mail date of the non-final office action, it is prior to any date that a Notice of Abandonment would have issued, and supports Applicant's assertion that Changes of Correspondence Address forms were filed in the application.

Applicants submit that the assertions constitute adequate groung for revival under 37 CFR 1.137(a).

Of note is that no copies of the putatively filed Changes of Correspondence Address forms have been filed in support of the assertions.

A Grantable Petition Under 37 CFR 1.137(a)

A grantable petition to revive an abandoned application under 37 CFR 1.137(a) must be accompanied by: (**1**) the required reply (unless previously filed), which may met by the filing of a notice of appeal and the requisite fee; a Request for Continued Examination; an amendment or request for reconsideration which *prima facie* places the application in condition for allowance, or a first or second submission under 37 CFR 1.129(a) if the application has been pending for at least two years as of June 8, 1995, taking into account any reference made in such application to any earlier filed application under 35 USC 120, 121 and 365(c); (**2**) the petition fee as set forth in 37 CFR 1.17(l); (**3**) a showing to the satisfaction of the Commissioner that the entire delay in filing the required reply from the due date for the reply until the filing of a grantable petition pursuant to 37 CFR 1.137(a) was unavoidable; and (**4**) any terminal disclaimer (and fee as set forth in 37 CFR 1.20(d)) required pursuant to 37 CFR 1.137(c).

Applicant lacks item (**3**) as set forth above.

Applicable Law

The general standard applied by the Office requires petitioner to establish that petitioner treated the patent the same as a reasonable and prudent person would treat his or her most important business.[1] 35 U.S.C. 41(c)(1) states, "The Commissioner may accept the payment of any maintenance fee ... at any time ... if the delay is shown *to the satisfaction of the Commissioner* to have been unavoidable." (emphasis added). "In the specialized field of patent law, ... the Commissioner of Patent and Trademarks is primarily responsible for the application and enforcement of the various narrow and technical statutory and regulatory provisions. His interpretation of those provisions is entitled to considerable deference." Rydeen v. Quigg, 748 F.Supp. 900, 904, 16 U.S.P.Q.2d (BNA) 1876 (D.D.C. 1990), aff'd without opinion (Rule 36), 937 F.2d 623 (Fed. Cir. 1991) (citing Morganroth v. Quigg, 885 F.2d 843, 848, 12 U.S.P.Q.2d (BNA) 1125 (Fed. Cir. 1989); Ethicon, Inc. v. Quigg, 849 F.2d 1422, 1425, 7 U.S.P.Q.2d (BNA) 1152 (Fed. Cir. 1988) ("an agency' interpretation of a statute it administers is entitled to deference"); see also Chevron U.S.A. Inc. v. Natural Resources Defense Council, Inc., 467 U.S. 837, 844, 81 L. Ed. 694, 104 S. Ct. 2778 (1984) ("if the statute is silent or ambiguous with respect to the specific issue, the question for the court is whether the agency's answer is based on a permissible construction of the statute.")).

"The critical phrase 'unless it be shown to the satisfaction of the Commissioner that such delay was unavoidable' has remained unchanged since first enacted in 1861." Smith v. Mossinghoff, 671 F.2d 533, 538, 213 U.S.P.Q. (BNA) 977 (D.C. Cir. 1982). The standard for "unavoidable" delay for reinstating a patent is the same as the unavoidable standard for reviving an application. See Ray v. Lehman, 55 F.3d 606, 608-609, 34 U.S.P.Q.2d (BNA) 1786, 1787 (Fed. Cir. 1995) (citing In re patent No. 4,409,763, 7 U.S.P.Q.2d (BNA) 1798, 1800 (Comm'r Pat.

[1] The Commissioner is responsible for determining the standard for unavoidable delay and for applying that standard.

1990; Smith v. Mossinghoff, 671 F.2d 533, 538, 213 U.S.P.Q. (BNA) 977 (D.C. Cir. 1982). The court in In re Mattullath, accepted the standard which had been proposed by Commissioner Hall which "requires no more or greater care or diligence than is generally used and observed by prudent and careful men in relation to their most important business." In re Mattullath, 38 App. D.C. 497, 514-515 (1912) (quoting Ex parte Pratt, 1887 Dec. Comm'r Pat. 31, 32-33 (1887)). However, "The question of whether an applicant's delay in prosecuting an application was unavoidable [will] be decided on a case-by-case basis, taking all of the facts and circumstances into account."[2] Nonawareness of the content of, or a misunderstanding of, PTO statutes, PTO rules, the MPEP, or Official Gazette notices, does not constitute unavoidable delay.[3] The statute requires a "showing" by petitioner. Therefore, Applicant has the burden of proof. The decision will be based solely on the written, administrative record in existence. It is not enough that the delay was unavoidable; Applicant must prove that the delay was unavoidable. A petition will not be granted if Applicant provides insufficient evidence to "show" that the delay was unavoidable.

Applicant is further advised that the Patent and Trademark Office must rely on the actions or inactions of duly authorized and voluntarily chosen representatives of the applicant, and applicant is bound by the consequences of those actions or inactions. Link v. Wabash, 370 U.S. 626, 633-34 (1962); Huston v. Ladner, 973 F.2d 1564, 1567, 23 USPQ2d 1910, 1913 (Fed. Cir. 1992); see also Haines v. Quigg, 673 F. Supp. 314, 317, 5 USPQ2d 1130, 1132 (D.N. Ind. 1987). Specifically, petitioner's delay caused by the actions or inactions of his voluntarily chosen representative does not constitute unavoidable delay within the meaning of 35 U.S.C. 133 or 37 CFR 1.137(a). Haines v. Quigg,

---

[2] Smith v. Mossinghoff, 671 F.2d 533, 538, 213 U.S.P.Q. (BNA) 977 (1982).

[3] See Smith v. Mossinghoff, 671 F.2d 533, 538, 213 U.S.P.Q. (BNA) 977 (Fed. Cir. 1982) (citing Potter v. Dann, 201 U.S.P.Q. (BNA) 574 (D. D.C. 1978) for the proposition that counsel's nonawareness of PTO rules does not constitute "unavoidable" delay)); Vincent v. Mossinghoff, 1985 U.S. Dist. LEXIS 23119, 13, 230 U.S.P.Q. (BNA) 621 (D. D.C. 1985) (Plaintiffs, through their counsel's actions, **or their own**, must be held responsible for having noted the MPEP section and Official Gazette notices expressly stating that the certified mailing procedures outlined in 37 CFR 1.8(a) do not apply to continuation applications.) (Emphasis added).

673 F. Supp. 314, 5 USPQ2d 1130 (D. Ind. 1987); Smith v. Diamond, 209 USPQ 1091 (D.D.C. 1981); Potter v. Dann, 201 USPQ 574 (D.D.C. 1978); Ex parte Murray, 1891 Dec. Comm'r Pat. 130, 131 (Comm'r Pat. 1891). In re Mattullath, 38 App. D.C. 497, 514-15 (1912)(quoting Ex parte Pratt, 1887 Dec. Comm'r Pat. 31, 32-33 (1887)); see also Winkler v. Ladd, 221 F. Supp. 550, 552, 138 USPQ 666, 167-68 (D.D.C. 1963), aff'd, 143 USPQ 172 (D.C. Cir. 1963); Ex parte Henrich, 1913 Dec. Comm'r Pat. 139, 141 (1913).

Finally, a "delay (in responding) resulting from the lack of knowledge or improper application of the patent statute, rules of practice, or MPEP, [] does not constitute unavoidable delay." MPEP 711.03(c).

Applicant's Assertion

Applicant files the instant petition and asserts that the delay was unavoidable because Changes of Correspondence Address forms were filed in the application prior to the mailing of the non-final Office action.

Applicant is advised that the USPTO file is the official record of the papers filed in this application. A review of the official file reveals that no Change of Correspondence Address has been filed in this application, since no such Change of Correspondence Address is present in the file. An applicant alleging that a paper was filed in the USPTO and later misplaced has the burden of proving the allegation by a preponderance of the evidence.

Under 37 CFR 1.8

> "[c]orrespondence required to be filed in the Patent and Trademark Office within a set period of time will be considered timely filed if the procedure described in this section is followed. The actual date of receipt will be used for all other purposes.
>
> (1) Correspondence will be considered as being timely filed if:

> (i) The correspondence is mailed or transmitted prior to the expiration of the set period of time by being:
>
> (A) Addressed as set out in § 1.1(a) and deposited with the U.S. Postal Service with sufficient postage first class mail; or
>
> (B) Transmitted by facsimile to the Patent and Trademark Office in accordance with § 1.6(d); and
>
> (ii) The correspondence includes a certificate for each piece of correspondence stating the date of deposit or transmission. The person signing the certificate should have a reasonable basis to expect that the correspondence would be mailed or transmitted on or before the date indicated.

Applicant has failed to provide copies of any Change of Address forms that include a Certificate of Mailing under 37 CFR 1.8, which would demonstrate the timely filing of a Change of Correspondence Address.

Further to this, section 503 of the MPEP provides that [i]f a receipt of any item (e.g., paper or fee) filed in the USPTO is desired, it may be obtained by enclosing with the paper a self-addressed postcard specifically identifying the item.

Applicant has failed to provide a copy of a return-receipt postcard that would evidence timely filing of a Change of Correspondence Address with this Office prior to the mailing of the non-final Office action.

Applicant has not presented any evidence to demonstrate that he followed PTO statutes, PTO rules, the MPEP, or Official Gazette notices in effectuating the timely filing of a Change of Correspondence Address.

The petition is dismissed without prejudice. If Applicant has proof that a Change of Correspondence was filed with this Office, Applicant should submit such proof in any request for reconsideration of this Decision.

A decision of the petition under 37 CFR 1.137(b) based upon unavoidable delay will be held in abeyance for a period of two (2) months awaiting Applicant's reply to this dismissal.

Further correspondence with respect to this matter should be addressed as follows:

By mail: Commissioner for Patents
PO Box 1450
Alexandria, VA 22313-1450

By FAX: (571) 273-8300
Attn: Office of Petitions

By hand: Customer Service Window
Randolph Building
401 Dulany Street
Alexandria, VA 22314

Telephone inquiries concerning this matter should be directed to the undersigned at (571) 272-3232.

Derek L. Woods
Attorney
Office of Petitions

UNITED STATES PATENT AND TRADEMARK OFFICE

COMMISSIONER FOR PATENTS
UNITED STATES PATENT AND TRADEMARK OFFICE
P.O. BOX 1450
ALEXANDRIA, VA 22313-1450
www.uspto.gov

BLACK LOWE & GRAHAM
701 FIFTH AVENUE
SUITE 4800
SEATTLE, WA 98104

COPY MAILED
MAR 15 2006
OFFICE OF PETITIONS

In re Application of :
Maynard L. Strangeland :
Application No. 10/737,585 : ON PETITION
Filed: December 16, 2003 :
Title of Invention: :
INDUCER TIP VORTEX SUPRESSOR :

This is in response to the Request for Reconsideration of Petition Under 37 CFR 1.137(a), or Alternatively due to Unintentional Abandonment Under 37 CFR 1.137(b), filed January 3, 2006.

The petition under 37 CFR 1.137(a) is dismissed.
The petition under 37 CFR 1.137(b) is granted.

Background:

The above-identified application became abandoned for failure to timely and properly reply to the non-final Office action, mailed March 24, 2005. The Office action set a three (3) month period for reply. No reply having been received, the application became abandoned on June 25, 2005. The mailing of this Decision precedes the mailing of a Notice of Abandonment.

The December 2, 2005 petition

Applicant filed a petition on December 2, 2005 wherein Applicant asserted that the Patent Office was previously made aware of the correct address of the attorneys of record as a result of the filing of one or more Changes of Correspondence Address forms, and by official change of address associated with customer number of the attorney(s) of record.

Applicant also asserted that the Office had actual knowledge of the correct address in this application because the Assignment Recordation document was mailed to the correct address on July 2, 2004. Applicant noted that, while this date is after the mail date of the non-final office action, it is prior to any date that a Notice of Abandonment would have issued, and supports Applicant's assertion that Changes of Correspondence Address forms were filed in the application.

Applicants submitted that the assertions constituted adequate ground for revival under 37 CFR 1.137(a).

Noted was the fact that no copies of the putatively filed Changes of Correspondence Address forms were filed with the petition in support of the assertions.

The December 15, 2005 Decision Dismissing the Petition

The petition was dismissed in a Decision mailed December 15, 2005. The dismissal advised Applicant that the USPTO file is the official record of the papers filed in this application. A review of the official file revealed that no Change of Correspondence Address had been filed in this application, since no such Change of Correspondence Address was present in the file. Applicant was advised that "an applicant alleging that a paper was filed in the USPTO and later misplaced has the burden of proving the allegation by a preponderance of the evidence." Dismissal at p.5

Applicant was further directed to 37 CFR 1.8, which provides that

> "[c]orrespondence required to be filed in the Patent and Trademark Office within a set period of time will be considered timely filed if the procedure described in this section is followed. The actual date of receipt will be used for all other purposes.
>
> (1) Correspondence will be considered as being timely filed if:
>
> (i) The correspondence is mailed or transmitted prior to the expiration of the set period of time by being:

> (A) Addressed as set out in § 1.1(a) and deposited with the U.S. Postal Service with sufficient postage first class mail; or
>
> (B) Transmitted by facsimile to the Patent and Trademark Office in accordance with § 1.6(d); and
>
> (ii) The correspondence includes a certificate for each piece of correspondence stating the date of deposit or transmission. The person signing the certificate should have a reasonable basis to expect that the correspondence would be mailed or transmitted on or before the date indicated.

Applicant was informed that he had failed to provide copies of any Change of Address forms that include a Certificate of Mailing under 37 CFR 1.8, which would demonstrate the timely filing of a Change of Correspondence Address.

Further to this, Applicant was informed that section 503 of the MPEP provides that [i]f a receipt of any item (e.g., paper or fee) filed in the USPTO is desired, it may be obtained by enclosing with the paper a self-addressed postcard specifically identifying the item.

It was noted in the decision that Applicant had failed to provide a copy of a return-receipt postcard that would evidence timely filing of a Change of Correspondence Address with this Office prior to the mailing of the non-final Office action.

It was pointed out to Applicant that Applicant had not presented any evidence to demonstrate that he followed PTO statutes, PTO rules, the MPEP, or Official Gazette notices in effectuating the timely filing of a Change of Correspondence Address.

The petition was dismissed without prejudice. Applicant was advised that if Applicant has proof that a Change of Correspondence was filed with this Office, Applicant should submit such proof in any request for reconsideration of this Decision.

<u>The instant Request for Reconsideration</u>

Applicant files the instant Request for Reconsideration and includes the Declaration of Mark L. Lorbiecki ("Lorbiecki Declaration"), and Supplemental Declaration of Dale C. Barr ("Second Barr Declaration"). Applicant notes that page 1 of Attachment A to the Second Barr Declaration bears an official stamp of this Office indicating receipt in the Office of Initial Patent Examination ("OIPE") on September 13, 2004. Applicant asserts that Attachment A to the Second Barr Declaration provides the necessary proof that the change of address was received by this Office prior to the mailing of the non-final Office action.

A Grantable Petition Under 37 CFR 1.137(a)

A grantable petition to revive an abandoned application under 37 CFR 1.137(a) must be accompanied by: (**1**) the required reply (unless previously filed), which may met by the filing of a notice of appeal and the requisite fee; a Request for Continued Examination; an amendment or request for reconsideration which *prima facie* places the application in condition for allowance, or a first or second submission under 37 CFR 1.129(a) if the application has been pending for at least two years as of June 8, 1995, taking into account any reference made in such application to any earlier filed application under 35 USC 120, 121 and 365(c); (**2**) the petition fee as set forth in 37 CFR 1.17(l); (**3**) a showing to the satisfaction of the Commissioner that the entire delay in filing the required reply from the due date for the reply until the filing of a grantable petition pursuant to 37 CFR 1.137(a) was unavoidable; and (**4**) any terminal disclaimer (and fee as set forth in 37 CFR 1.20(d)) required pursuant to 37 CFR 1.137(c).

Applicant lacks item (**3**) as set forth above.

Applicable Law

The general standard applied by the Office requires petitioner to establish that petitioner treated the patent the same as a reasonable and prudent person would treat his or her most important business.[1] 35 U.S.C. 41(c)(1) states, "The Commissioner may accept the payment of any maintenance fee ... at any time

[1] The Commissioner is responsible for determining the standard for unavoidable delay and for applying that standard.

... if the delay is shown *to the satisfaction of the Commissioner* to have been unavoidable." (emphasis added). "In the specialized field of patent law, ... the Commissioner of Patent and Trademarks is primarily responsible for the application and enforcement of the various narrow and technical statutory and regulatory provisions. His interpretation of those provisions is entitled to considerable deference." Rydeen v. Quigg, 748 F.Supp. 900, 904, 16 U.S.P.Q.2d (BNA)1876 (D.D.C. 1990), aff'd without opinion (Rule 36), 937 F.2d 623 (Fed. Cir. 1991) (citing Morganroth v. Quigg, 885 F.2d 843, 848, 12 U.S.P.Q.2d (BNA) 1125 (Fed. Cir. 1989); Ethicon, Inc. v. Quigg, 849 F.2d 1422, 1425, 7 U.S.P.Q.2d (BNA) 1152 (Fed. Cir. 1988) ("an agency' interpretation of a statute it administers is entitled to deference"); see also Chevron U.S.A. Inc. v. Natural Resources Defense Council, Inc., 467 U.S. 837, 844, 81 L. Ed. 694, 104 S. Ct. 2778 (1984) ("if the statute is silent or ambiguous with respect to the specific issue, the question for the court is whether the agency's answer is based on a permissible construction of the statute.")).

"The critical phrase 'unless it be shown to the satisfaction of the Commissioner that such delay was unavoidable' has remained unchanged since first enacted in 1861." Smith v. Mossinghoff, 671 F.2d 533, 538, 213 U.S.P.Q. (BNA) 977 (D.C. Cir. 1982). The standard for "unavoidable" delay for reinstating a patent is the same as the unavoidable standard for reviving an application. See Ray v. Lehman, 55 F.3d 606, 608-609, 34 U.S.P.Q.2d (BNA) 1786, 1787 (Fed. Cir. 1995) (citing In re patent No. 4,409,763, 7 U.S.P.Q.2d (BNA) 1798, 1800 (Comm'r Pat. 1990; Smith v. Mossinghoff, 671 F.2d 533, 538, 213 U.S.P.Q. (BNA) 977 (D.C. Cir. 1982). The court in In re Mattullath, accepted the standard which had been proposed by Commissioner Hall which "requires no more or greater care or diligence than is generally used and observed by prudent and careful men in relation to their most important business." In re Mattullath, 38 App. D.C. 497, 514-515 (1912) (quoting Ex parte Pratt, 1887 Dec. Comm'r Pat. 31, 32-33 (1887)). However, "The question of whether an applicant's delay in prosecuting an application was unavoidable [will] be decided on a case-by-case basis, taking all of the facts and circumstances into account."[2] Nonawareness of the content of, or a misunderstanding of, PTO statutes, PTO

---

[2] Smith v. Mossinghoff, 671 F.2d 533, 538, 213 U.S.P.Q. (BNA) 977 (1982).

rules, the MPEP, or Official Gazette notices, does not constitute unavoidable delay.[3] The statute requires a "showing" by petitioner. Therefore, Applicant has the burden of proof. The decision will be based solely on the written, administrative record in existence. It is not enough that the delay was unavoidable; Applicant must prove that the delay was unavoidable. A petition will not be granted if Applicant provides insufficient evidence to "show" that the delay was unavoidable.

Applicant is further advised that the Patent and Trademark Office must rely on the actions or inactions of duly authorized and voluntarily chosen representatives of the applicant, and applicant is bound by the consequences of those actions or inactions. Link v. Wabash, 370 U.S. 626, 633-34 (1962); Huston v. Ladner, 973 F.2d 1564, 1567, 23 USPQ2d 1910, 1913 (Fed. Cir. 1992); see also Haines v. Quigg, 673 F. Supp. 314, 317, 5 USPQ2d 1130, 1132 (D.N. Ind. 1987). Specifically, petitioner's delay caused by the actions or inactions of his voluntarily chosen representative does not constitute unavoidable delay within the meaning of 35 U.S.C. 133 or 37 CFR 1.137(a). Haines v. Quigg, 673 F. Supp. 314, 5 USPQ2d 1130 (D. Ind. 1987); Smith v. Diamond, 209 USPQ 1091 (D.D.C. 1981); Potter v. Dann, 201 USPQ 574 (D.D.C. 1978); Ex parte Murray, 1891 Dec. Comm'r Pat. 130, 131 (Comm'r Pat. 1891). In re Mattullath, 38 App. D.C. 497, 514-15 (1912)(quoting Ex parte Pratt, 1887 Dec. Comm'r Pat. 31, 32-33 (1887)); see also Winkler v. Ladd, 221 F. Supp. 550, 552, 138 USPQ 666, 167-68 (D.D.C. 1963), aff'd, 143 USPQ 172 (D.C. Cir. 1963); Ex parte Henrich, 1913 Dec. Comm'r Pat. 139, 141 (1913).

Finally, a "delay (in responding) resulting from the lack of knowledge or improper application of the patent statute, rules of practice, or MPEP, [] does not constitute unavoidable delay." MPEP 711.03(c).

---

[3] See Smith v. Mossinghoff, 671 F.2d 533, 538, 213 U.S.P.Q. (BNA) 977 (Fed. Cir. 1982) (citing Potter v. Dann, 201 U.S.P.Q. (BNA) 574 (D. D.C. 1978) for the proposition that counsel's nonawareness of PTO rules does not constitute "unavoidable" delay)); Vincent v. Mossinghoff, 1985 U.S. Dist. LEXIS 23119, 13, 230 U.S.P.Q. (BNA) 621 (D. D.C. 1985) (Plaintiffs, through their counsel's actions, **or their own**, must be held responsible for having noted the MPEP section and Official Gazette notices expressly stating that the certified mailing procedures outlined in 37 CFR 1.8(a) do not apply to continuation applications.) (Emphasis added).

Analysis

A review of Attachment A to the Second Barr Declaration reveals that it is entitled Change of Attorney's Address in Application. The correspondence directs this Office to "[p]lease send all correspondence for the applications enclosed herein and listed below:…." The correspondence then lists two (2) columns (and two (2) pages) of applications and corresponding Attorney Docket Numbers, and a Customer Number is included on the bottom of each page. The header information, where applicant; serial number; filing date; title; Attorney Docket No.; Group Art Unit, and Examiner information could have been provided[4], include only the following: Applicant: Various; Attorney Docket No.[:] Various. The other identifiers, serial number; filing date; title; Group Art Unit, and Examiner information, were left blank. As such, the only information provided on the form was Application number and docket number, and customer number.

Applicable Law, Rules and MPEP

37 CFR 1.5 provides:

> No correspondence relating to an application should be filed prior to receipt of the application number from the Patent and Trademark Office. When a letter directed to the Patent and Trademark Office concerns a previously filed application for a patent, it must identify on the top page in a conspicuous location, the application number (consisting of the series code and the serial number; e.g., 07/123,456), or the serial number and filing date assigned to that application by the Patent and Trademark Office, or the international application number of the international application. (Emphasis supplied).

The MPEP further cautions that

> [t]he Office often experiences difficulty in matching incoming papers with the application file to which they pertain because insufficient or erroneous information is given. This applies especially to amendments, powers of attorney, changes of address,

[4] In fact, the titles for each of these identifiers is present on the form.

status letters, petitions for extension of time, and other petitions. (Emphasis supplied).

MPEP § 502

In view of the above, Applicant's "Change of Attorney's Address in Application" failed to comply with 37 CFR 1.5 or the MPEP 502.

Conclusion

Applicant failed to comply with Office rules when filing the Change of Correspondence Address. As such, the change of correspondence address was not properly matched with the application. Accordingly, the petition under 37 CFR 1.137(a) is dismissed.

The petition under 37 CFR 1.137(b)

Applicant filed a response to the non-final Office action on December 2, 2005.

Accordingly, the petition is granted.

Applicant's deposit account has been charged the fees for petitions under 37 CFR 1.137(a) and (b).

The application file is being referred to Technology Center Art Unit 3745 for processing of the Amendment in due course.

Telephone inquiries concerning this matter should be directed to the undersigned at (571) 272-3232.

Derek L. Woods
Attorney
Office of Petitions
Office of the Deputy Commissioner
for Patent Examination Policy

3-21-06

UNITED STATES DEPARTMENT OF COMMERCE
Patent and Trademark Office
ASSISTANT SECRETARY OF COMMERCE AND
COMMISSIONER OF PATENTS AND TRADEMARKS
Washington, D.C. 20231

Patent No.: 7,000,445
Inventors : David G. Hangauer, Jr., et. al.
Issued: February 28, 2006
Attorney Docket No.: 28856-502

Re: Request for Certificate of Correction

Consideration has been given your request for the issuance of a certificate of correction for the above-identified patent under the provisions of Rule 1.323.

An error on a patent can be corrected by a certificate of correction, if appropriate. Accordingly, a petition under 37 CFR 1.183 is required to correct the alleged error in the Attorney, Agent or Firm, since the date is printed solely in accordance with the PTOL-85b (Issue Fee Transmittal), submitted by applicant at time of payment of the base issue fee, and since the error was a result of applicant's failure to comply with the requirement that the complete and correct information be indicated on the PTOL-85b, no correction is in order here under the provisions of Rule 1.323 unless a petition is granted.

In view of the foregoing, your request is hereby denied.

However, a petition under 37 CFR 1.183 should be directed to the attention of the Assistant Commissioner for Patents, using the following mailing address or Fax number.

By Mail: Commissioner of Patents and Trademarks
MAIL STOP STATION
Alexandria, VA 22313-1450

By FAX: (703) 305-6916
Attn: Office of Petitions

Further correspondence concerning this matter should be filed and directed to Decisions and Certificates of Correction Branch.

Eva James
For Cecelia B. Newman
Decisions & Certificates
of Correction Branch
(703) 305-8047 or 8228

Ivor R. Elrifi
One Financial Center
Boston, MA 02111

eJ

UNITED STATES PATENT AND TRADEMARK OFFICE

COMMISSIONER FOR PATENTS
UNITED STATES PATENT AND TRADEMARK OFFICE
P.O. BOX 1450
ALEXANDRIA, VA 22313-1450
www.uspto.gov

JOHN LEZDEY & ASSOCIATES
2875 MCI DRIVE
PINELLAS PARK, FL 33782

COPY MAILED

MAY 02 2007

OFFICE OF PETITIONS

In re Application of	:	
BRADFORD	:	
Application No.: 10/737,620	:	DECISION ON PETITION
Filing Date: December 15, 2003	:	UNDER 37 CFR 1.137(B)
Attorney Docket No.: 1803-14	:	

This is a decision on the petition under 37 CFR 1.137(b), filed December 19, 2006, to revive the above-identified application.

The petition is **GRANTED.**

The above-identified application became abandoned for failure to submit the issue fee in a timely manner in reply to the Notice of Allowance mailed September 15, 2005, which set a statutory period for reply of three (3) months. Accordingly, by operation of law, the above-identified application became abandoned on December 16, 2005.

The petition satisfies the conditions for revival pursuant to the provisions of 37 CFR 1.137(b) in that (1) the reply in the form of payment of the issue fee; (2) the petition fee; and (3) the required statement of unintentional delay have been received. Accordingly, the payment of the issue fee is accepted as having been unintentionally delayed.

This application is being referred to the Office of Publications.

Telephone inquiries concerning this decision should be directed to the undersigned at (571) 272-3303.

Bryan Lin

Bryan Lin
Legal Examiner
Office of the Deputy Commissioner
for Patent Examination Policy

UNITED STATES PATENT AND TRADEMARK OFFICE

Commissioner for Patents
United States Patent and Trademark Office
P.O. Box 1450
Alexandria, VA 22313-1450
www.uspto.gov

RATNERPRESTIA
P O BOX 1596
WILMINGTON, DE 19899

COPY MAILED
MAY 1 0 2006
OFFICE OF PETITIONS

In re Application of	:	
Tadashi Fujinawa	:	
Application No. 10/737,632	:	DECISION GRANTING PETITION
Filed: December 16, 2003	:	UNDER 37 CFR 1.313(c)(2)
Attorney Docket No. AGA-103US	:	

This is a decision on the petition, filed May 9, 2006, under 37 CFR 1.313(c)(2) to withdraw the above-identified application from issue after payment of the issue fee.

The petition is **GRANTED**.

The above-identified application is withdrawn from issue for consideration of a submission under 37 CFR 1.114 (request for continued examination). See 37 CFR 1.313(c)(2).

Petitioner is advised that the issue fee paid on April 17, 2006 in the above-identified application cannot be refunded. If, however, the above-identified application is again allowed, petitioner may request that it be applied towards the issue fee required by the new Notice of Allowance.[1]

The record discloses that this application currently enjoys small entity status; however, the credit card authorizes the charging of a large entity filing fee for the RCE. Since there is no indication that a statement in compliance with 37 CFR 1.27(g)(2) stating that this application is no longer entitled to small entity status has been submitted, the Office will assess the small entity filing fee of $395 towards the RCE. If in fact this application is no longer entitled to small entity status, a statement in compliance with 37 CFR 1.27(g)(2) or, if appropriate, a petition under 37 CFR 1.27(c) should be submitted in this application.

Telephone inquiries should be directed to the undersigned at (571) 272-3218.

This matter is being referred to Technology Center AU 2834 for processing of the request for continued examination under 37 CFR 1.114 and for consideration of the Information Disclosure Statement.

Frances Hicks
Petitions Examiner
Office of Petitions

C:\Documents and Settings\FHicks\My Documents\470\may9\737632.wpd

---

[1] *The request to apply the issue fee to the new Notice may be satisfied by completing and returning the new Part B – Fee(s) Transmittal Form (along with any balance due at the time of submission), which includes the following language thereon: "The Director of the USPTO is requested to apply the Issue Fee and Publication Fee (if any) or to re-apply any previously paid issue fee in the application identified above. Petitioner is advised that, whether a fee is indicated as being due or not, the Issue Fee Transmittal Form must be completed and timely submitted to avoid abandonment. Note the language in bold text on the first page of the Notice of Allowance and Fee(s) Due (PTOL-85).*

UNITED STATES PATENT AND TRADEMARK OFFICE

Commissioner for Patents
United States Patent and Trademark Office
P.O. Box 1450
Alexandria, VA 22313-1450
www.uspto.gov

CARL I. BRUNDIDGE
ANTONELLI, TERRY, STOUT, & KRAUS, LLP
1300 NORTH SEVENTEENTH STREET
SUITE 1800
ARLINGTON, VA 22209-9889

MAILED

DEC 0 3 2004

Technology Center 2100

In re Application of: Ito, et al.
Application No. 10/737,641
Filed: December 15, 2003
For: SECURITY METHOD AND SYSTEM FOR STORAGE SUBSYSTEM

DECISION ON PETITION TO MAKE SPECIAL (ACCELERATED EXAMINATION) UNDER M.P.E.P. §708.02 (VIII)

This is a response to the petition filed April 21, 2004, under 37 C.F.R. §1.102(d) and M.P.E.P. §708.02 (VIII): Accelerated Examination, to make the above-identified application special.

The Petition is **GRANTED**.

M.P.E.P. §708.02, Section VIII which sets out the prerequisites for a grantable petition for Accelerated Examination under 37 C.F.R. §1.102(d) states in relevant part:

A new application (one which has not received any examination by the examiner) may be granted special status provided that applicant (and this term includes applicant's attorney or agent) complies with each of the following items:

(a) Submits a petition to make special accompanied by the **fee set forth in 37 CFR 1.17(h)**;

(b) Presents all claims directed to a single invention, or if the Office determines that all the claims presented are not obviously directed to a single invention, will make an election without traverse as a prerequisite to the grant of special status;

(c) Submits a statement(s) that a pre-examination search was made, listing the field of search by class and subclass, publication, Chemical Abstracts, foreign patents, etc. The pre-examination search must be directed to the invention as claimed in the application for which special status is requested. A search made by a foreign patent office satisfies this requirement;

(d) Submits one copy each of the references deemed most closely related to the subject matter encompassed by the claims if said references are not already of record; and

(e) Submits a detailed discussion of the references, which discussion points out, with the particularity required by 37 CFR 1.111 (b) and (c), how the claimed subject matter is patentable over the references.

Petition to Make Special **GRANTED** since all the requirements for special status under M.P.E.P. §708.02, Section VIII have been met.

The application file is being forwarded to the Examiner for accelerated examination in accordance with the procedures set forth in M.P.E.P. §708.02, Section VIII. If the application is subsequently allowed, it will be given priority for printing. See M.P.E.P. §1309. Note that the Examiner has already issued a non-final action. Therefore, Applicant must file a "record" reply responsive to the examiner's first action. The reply at this stage, to be proper, must be restricted to the rejections, objections, and requirements made. Any amendment, which would require broadening the search field, will be treated as an improper reply. See M.P.E.P. §708.02, Section VIII (section (c) of the special examining procedures).

Brian L. Johnson
Special Program Examiner
Technology Center 2100
Computer Architecture, Software and Information Security
571-272-3595

12/1/04

HMJ: 11/30/04

UNITED STATES PATENT AND TRADEMARK OFFICE

Commissioner for Patents
United States Patent and Trademark Office
P.O. Box 1450
Alexandria, VA 22313-1450
www.uspto.gov

PATENT DOCUMENTATION CENTER
XEROX CORPORATION
100 CLINTON AVENUE SOUTH
XEROX SQ. 20TH FLOOR
ROCHESTER NY 14644

RECEIVED

DEC 23 2008

OFFICE OF PETITIONS

In re Patent No. RE40230 :
Application No. 10/737,669 :
Filed: December 15, 2003 : ON PETITION
Issued: April 8, 2008 :
Attorney Docket No. D/A0902R :

This is a decision on the petition filed October 31, 2008, which is being treated as a request under 37 CFR 3.81(b)[1] to correct the name of the assignee on the front page of the above-identified patent by way of a Certificate of Correction.

The request is **GRANTED**.

Additionally, 37 CFR 3.81(b) requires payment of a $130.00 surcharge fee which will be charged to petitioner's deposit account as authorized October 31, 2008.

This matter is being referred to the Certificates of Correction Branch for issuance of the requested Certificate of Correction.

Telephone inquiries concerning this decision may be directed to Joan Olszewski at (571) 272-7751. Inquiries regarding the certificate of correction should be directed to the Certificate of Correction Branch at (571) 272-4200.

/Liana Walsh/
Liana Walsh
Petitions Examiner
Office of Petitions

[1] *See* MPEP 1309, subsection II; and Official Gazette of June 22, 2004.

UNITED STATES PATENT AND TRADEMARK OFFICE

Commissioner for Patents
United States Patent and Trademark Office
P.O. Box 1450
Alexandria, VA 22313-1450
www.uspto.gov

MASON LAW, PL
17757 US HWY 19 N.
CLEARWATER FL 33764

COPY MAILED

MAY 2 4 2004

OFFICE OF PETITIONS

In re Application of
Hastings
Application No. 10/737,683
Filed: December 16, 2003
Attorney Docket No. 3802.002

FOR: FISH CHUM SYSTEM AND PROCESS FOR MAKING SAME

: DECISION GRANTING
: PETITION

This is a decision on the petition entitled, "PETITION TO ACCEPT FILING DATE OF APPLICATION," filed April 12, 2004, requesting, in effect, withdrawal of the Notice of Incomplete Nonprovisional Application (Notice), mailed March 12, 2004. The petition will be treated under 37 CFR 1.53(e).

The application was deposited on December 16, 2003. On March 12, 2004, the Office of Initial Patent Examination mailed a Notice informing petitioner that no filing date had been accorded to the above-identified application because the application as filed did not include drawings. It is noted that the specification references drawing figures.

In response to the Notice, petitioner timely filed the present petition. Petitioner requests that the application be accorded a filing date of December 16, 2003 on the basis that 3 pages of formal drawing figures were received in the Patent and Trademark Office (PTO) on December 16, 2003. In support, the petition is accompanied by a copy of applicant's itemized postcard receipt showing an Office of Initial Patent Examination generated barcode citing December 16, 2003 as the date of receipt. The postcard lists, *inter alia*, that the filing included 3 pages of formal drawing figures.

The return postcard constitutes *prima facie* evidence that 3 pages of formal drawing figures were filed on December 16, 2003. MPEP 503. Accordingly, the request is granted.

Pursuant to petitioner's request, the $130.00 petition fee will be credited to deposit account no.13-1992.

The application is being returned to Office of Initial Patent Examination for further processing, with a filing date of **December 16, 2003**, using the copy of the 3 pages of formal drawing figures submitted with the instant petition. Office records will be corrected to show that 3 pages of drawings were present on filing.

Any inquiries pertaining to this matter may be directed to the undersigned at (703) 308-6712.

E. Shirene Willis
Senior Petitions Attorney
Office of Petitions

UNITED STATES PATENT AND TRADEMARK OFFICE

COMMISSIONER FOR PATENTS
UNITED STATES PATENT AND TRADEMARK OFFICE
P.O. BOX 1450
ALEXANDRIA, VA 22313-1450
www.uspto.gov

PFIZER INC
Steve T. Zelson
150 EAST 42ND STREET
5TH FLOOR - STOP 49
NEW YORK, NY 10017-5612

COPY MAILED

FEB 07 2008

OFFICE OF PETITIONS

In re Application of :
John C. Kath, et. al. :
Application No. 10/737,691 : DECISION ON PETITION
Filed: December 16, 2003 :
Attorney Docket No. PC25074A :

This is a decision on the petition under the unintentional provisions of 37 CFR 1.137(b), filed September 14, 2006, to revive the above-identified application. The delay in responding is regretted.

The application became abandoned for failure to timely file a reply to the final Office action mailed January 12, 2006.

There is no indication that the person signing the instant petition was ever given a power of attorney or authorization of agent to prosecute the above-identified application. In accordance with 37 CFR 1.34(a), the signature appearing on the petition shall constitute a representation to the United States Patent and Trademark Office that he/she is authorized to represent the particular party in whose behalf he/she acts.

The petition satisfies the requirements of 37 CFR 1.137(b), in that, petitioner has supplied (1) the reply in the form of a Notice of Appeal and $500 fee; (2) the petition fee of $1,500; and (3) a proper statement of unintentional delay. Therefore, the petition is **GRANTED**.

The two-month period for filing an appeal brief under 37 CFR 41.37 (accompanied by the fee required by 37 CFR 41.20(b)(2)), runs from the date of this decision.

This application is being referred to Technology Center Art Unit 1624, to await the filing of an appeal brief or for such other appropriate reply as may be submitted to continue prosecution of the application.

Telephone inquiries concerning this decision should be directed to the undersigned at (571) 272-3226.

Andrea Smith
Petitions Examiner
Office of Petitions

UNITED STATES PATENT AND TRADEMARK OFFICE

COMMISSIONER FOR PATENTS
UNITED STATES PATENT AND TRADEMARK OFFICE
P.O. BOX 1450
ALEXANDRIA, VA 22313-1450
www.uspto.gov

THE ECLIPSE GROUP
10605 BALBOA BLVD., SUITE 300
GRANADA HILLS CA 91344

COPY MAILED

APR 26 2007

OFFICE OF PETITIONS

In re Application of :
Brodie :
Application No. 10/737,702 : ON PETITION
Filed: December 15, 2003 :
Attorney Docket No. ST00018C1 (112-US-C1) :
For: MEASUREMENT FAULT
DETECTION

This is a decision on the petition under 37 CFR 1.137(b), filed April 2, 2007, to revive the above-identified application.

This application became abandoned for failure to timely respond to the final Office action mailed May 3, 2006, which set an extendable three month period for reply. Accordingly, this application became abandoned on August 4, 2006. A Notice of Abandonment was mailed on January 30, 2007.

Applicant has submitted a RCE and required fee, amendment, and terminal disclaimer in reply to the May 3, 2006 final Office action, an acceptable statement of the unintentional nature of the delay in responding to the May 3, 2006 final Office action, and the petition fee.

The petition is **GRANTED**.

After the mailing of this decision the application will be forwarded to Technology Center AU 2863 for consideration of the RCE, amendment, and terminal disclaimer filed on April 2, 2007.

Telephone inquiries pertaining to this decision may be directed to the undersigned at (571) 272-3230.

Shirene Willis Brantley

Shirene Willis Brantley
Senior Petitions Attorney
Office of Petitions

UNITED STATES PATENT AND TRADEMARK OFFICE

COMMISSIONER FOR PATENTS
UNITED STATES PATENT AND TRADEMARK OFFICE
P.O. BOX 1450
ALEXANDRIA, VA 22313-1450
www.uspto.gov

MAILED
FROM DIRECTORS OFFICE

APR 05 2007

TECHNOLOGY CENTER 3600

In re Patent No. BARBEE ET AL.
Issue Date: February 6, 2007
Appl. No.: 10/737,703
Filed: December 15, 2003
For: RECIPROCATING SLICKLINE PUMP

DECISION DISMISSING PETITION
37 CFR 1.324

This is a decision on the petition under 37 CFR 1.48, filed June 7, 2004. In view of the fact that the patent has already issued, the request under 37 CFR 1.48 has been treated as a petition to correct inventorship under 37 CFR 1.324.

The petition is dismissed.

A petition to correct inventorship as provided by 37 CFR 1.324 requires (1) a statement from each person who is being added as an inventor that the inventorship error occurred without any deceptive intention on their part, (2) a statement from the current named inventors (including any "inventor" being deleted) who have not submitted a statement as per "(1)" either agreeing to the change of inventorship or stating that they have no disagreement in regard to the requested change, (3) a statement from all assignees of the parties submitting a statement under "(1)" and "(2)" agreeing to the change of inventorship in the patent; such statement must comply with the requirements of 37 CFR 3.73(b); and (4) the fee set forth in 37 CFR 1.20(b). This petition lacks item (2).

David J. Bagnell
Supervisory Patent Examiner
Art Unit 3672
Patent Examining Group 3600

WILLIAM B. PATTERSON
MOSER, PATTERSON & SHERIDAN, L.L.P.
Suite 1500
3040 Post Oak Blvd.
Houston, TX 77056

UNITED STATES PATENT AND TRADEMARK OFFICE

UNITED STATES DEPARTMENT OF COMMERCE
United States Patent and Trademark Office
Address: COMMISSIONER FOR PATENTS
P.O. Box 1450
Alexandria, Virginia 22313-1450
www.uspto.gov

APPLICATION NO.	FILING DATE	FIRST NAMED INVENTOR	ATTORNEY DOCKET NO.	CONFIRMATION NO.
10/737,703	12/15/2003	Phil Barbee	WEAT/0521	5147

7590 04/10/2008

WILLIAM B. PATTERSON
MOSER, PATTERSON & SHERIDAN, L.L.P.
Suite 1500
3040 Post Oak Blvd.
Houston, TX 77056

EXAMINER	
GAY, JENNIFER HAWKINS	

ART UNIT	PAPER NUMBER
3672	

MAIL DATE	DELIVERY MODE
04/10/2008	PAPER

Please find below and/or attached an Office communication concerning this application or proceeding.

The time period for reply, if any, is set in the attached communication.

UNITED STATES PATENT AND TRADEMARK OFFICE

Commissioner for Patents
United States Patent and Trademark Office
P.O. Box 1450
Alexandria, VA 22313-1450
www.uspto.gov

MAILED
FROM DIRECTORS OFFICE

APR 0 9 2008

TECHNOLOGY CENTER 3600

In re Patent No. BARBEE ET AL.
Issue Date: December 15, 2003
Appl No.: 10/737,703
Filed: December 15, 2003
For: RECIPROCATING SLICKLINE PUMP

DECISION GRANTING PETITION
37 CFR 1.324

This is a decision on the petition filed February 4, 2007 to correct inventorship under 37 CFR 1.324.

The petition is granted.

The patented file is being forwarded to Certificate of Corrections Branch for issuance of a certificate naming only the actual inventor or inventors.

/Jennifer H Gay/
Jennifer H Gay
Supervisory Patent Examiner
Art Unit 3676
Technology Center 3600

WILLIAM B. PATTERSON
MOSER, PATTERSON & SHERIDAN, L.L.P.
Suite 1500
3040 Post Oak Blvd.
Houston, TX 77056

SPE RESPONSE FOR CERTIFICATE OF CORRECTION

Paper No.: X

DATE : April 08, 2008

TO SPE OF : ART UNIT 3672

SUBJECT : Request for Certificate of Correction for Appl. No.: 10/737703 Patent No.: 7172028 B2

A response is requested with respect to a request for a certificate of correction.

With respect to the change(s) requested to correct Office and/or Applicant's errors, should the patent read as shown in the certificate of correction attached herewith or the COCIN document(s), in IFW images for the above-identified patented application? No new matter should be introduced, nor should the scope or meaning of the claims be changed.

If the response is for an IFW, within **7** days, please complete and forward the response, to the employee (named below) via scanning into application images, using document code **COCX**.

DO NOT SENT TO ATTORNEY

If the response is for a paper file wrapper, please complete the response and forward the response with the paper file wrapper, to the employee (named below), within **7** days, to:

Certificates of Correction Branch (CofC)
South Tower - 9A22
Palm Location 7580

You can fax the Directors/SPE response to 571-270-9990

LAMONTE NEWSOME
Certificates of Correction Branch
703-308-9390 ext. 112

Thank You For Your Assistance

The request for issuing the above-identified correction(s) is hereby:

Note your decision on the appropriate box.

- ☑ **Approved** — **All** changes apply.
- ☐ **Approved in Part** — Specify below which changes **do not** apply.
- ☐ **Denied** — State the reasons for denial below.

Comments: _____

_____

_____

_____

_____

_____ SPE

3676 Art Unit

UNITED STATES PATENT AND TRADEMARK OFFICE

Commissioner for Patents
United States Patent and Trademark Office
P.O. Box 1450
Alexandria, VA 22313-1450
www.uspto.gov

COPY MAILED

JUL 16 2007

OFFICE OF PETITIONS

WILSON SONSINI GOODRICH & ROSATI
650 PAGE MILL ROAD
PALO ALTO CA 94304-1050

In re Application of
REILEY, et al.
Application No. 10/737,705
Filed: December 15, 2003
Attorney Docket No. **29912-705.201**

DECISION ON PETITION
TO WITHDRAW
FROM RECORD

This is a decision on the Request to Withdraw as attorney or agent of record under 37 C.F.R. § 1.36(b), filed December 8, 2006.

The request is **NOT APPROVED** as moot.

A review of the file record indicates that the power of attorney to WILSON SONSINI GOODRICH & ROSATI has been revoked by the assignee of the patent application on January 5, 2007. Accordingly, the request to withdraw under 37 C.F.R. § 1.36(b) is moot.

All future communications from the Office will continue to be directed to the below-listed address until otherwise notified by applicant.

Telephone inquires concerning this decision should be directed to the undersigned at 571-272-7253.

Monica A. Graves
Petitions Examiner
Office of Petitions

cc: **SHAY LAW GROUP LLP**
2755 CAMPUS DRIVE, SUITE 210
SAN MATEO, CA 94403

UNITED STATES PATENT AND TRADEMARK OFFICE

Commissioner for Patents
United States Patent and Trademark Office
P.O. Box 1450
Alexandria, VA 22313-1450
www.uspto.gov

GARDNER GROFF, P.C.
PAPER MILL VILLAGE, BUILDING 23
600 VILLAGE TRACE
SUITE 300
MARIETTA, GA 30067

COPY MAILED

DEC 10 2004

OFFICE OF PETITIONS

In re Application of
Lisk et al.
Application No. 10/737,707
Filed: December 16, 2003
Attorney Docket No. 2C03.1-081
For: Article and Method for Ocular Aqueous Drainage

DECISION ACCORDING STATUS UNDER 37 CFR 1.47(a)

This is a decision on the petition under 37 CFR 1.47(a), filed August 25, 2004.

The petition is **granted**.

The above-identified application and papers have been reviewed and found in compliance with 37 CFR 1.47(a). This application is hereby accorded Rule 1.47(a) status.

As provided in Rule 1.47(c), this Office will forward notice of this application's filing to the non-signing inventor at the address given in the petition. Notice of the filing of this application will also be published in the Official Gazette.

The Office of Initial Patent Examination will be informed the application has been accorded status under 37 CFR 1.47(a).

Telephone inquiries should be directed to Petitions Attorney Steven Brantley at (571) 272-3203.

Charles Steven Brantley
Petitions Attorney
Office of Petitions

UNITED STATES PATENT AND TRADEMARK OFFICE

Commissioner for Patents
United States Patent and Trademark Office
P.O. Box 1450
Alexandria, VA 22313-1450
www.uspto.gov

Timothy B. Scull
Merchant & Gould P.C.
P.O. Box 2903
Minneapolis, MN 55402-0903

MAILED

DEC 21 2007

TECHNOLOGY CENTER 2100

In re Application of:
Michael Edward Meulemans et al
Appl. No.: 10/737,708
Filed: December 15, 2003
For: System and Method For Managing and Communicating Software Updates

DECISION ON PETITION UNDER 37 CFR § 1.59

This is a decision on petitions under 37 CFR § 1.59(b), filed on 13 November 2007 and 06 December 2007, to expunge information submitted pursuant to MPEP § 724.05.

The petitions are **DISMISSED**.

Petitioner requests that the information submitted on 13 November 2007 and 06 December 2007be expunged from the record if found not to be important to a reasonable examiner in deciding whether to allow the application to issue as a patent. The petition fee set forth in 37 CFR § 1.17(g) has been paid.

The petition is premature because the application has not been allowed or abandoned. Accordingly, it is not appropriate to make a final determination of whether or not the material requested to be expunged is "material," with "materiality" being defined as any information which the examiner considers as being important to a determination of patentability of the claims. Thus, the petition to expunge must be dismissed at this time.

During prosecution on the merits, the examiner will determine whether or not the information submitted on 13 November 2007 and 06 December 2007is considered to be "material." Once prosecution on the merits is closed, applicant may re-submit petitions to expunge the information. No further fee is required for such a second submission of a petition under 37 CFR § 1.59 to expunge information. If the information is not considered by the examiner to be material, the information will be expunged from the application and may be returned to applicant.

The identified documents are currently not available for public view.

Any inquiry concerning this decision should be directed to the undersigned whose telephone number is (571) 272-3591

/Gail Hayes/

Gail Hayes, SPRE/QAS
Technology Center 2100
Computer Architecture, Software, and
Information Security

UNITED STATES PATENT AND TRADEMARK OFFICE

Commissioner for Patents
United States Patent and Trademark Office
P.O. Box 1450
Alexandria, VA 22313-1450
www.uspto.gov

6/25/2009

MAILED

JUL 14 2009

Technology Center 2100

MERCHANT & GOULD (MICROSOFT)
P.O. BOX 2903
MINNEAPOLIS, MN 55402-0903

In re Application of: Meulemans et al.
Serial No.: 10/737,708
Filed: December 15, 2003
Docket: 14917.0468US01

Title: **SYSTEM AND METHOD FOR MANAGING AND COMMUNICATING SOFTWARE UPDATES**

DECISION ON PETITION TO MAKE SPECIAL FOR NEW APPLICATION UNDER 37 C.F.R. § 1.102 & M.P.E.P. § 708.02

This is a decision on the Re-Submitted Petition under 37 CFR § 1.59(b), filed on January 29, 2009 to expunge information submitted pursuant to MPEP § 724.05.

Petitioner requests that the information submitted on 13 November 2007 and 06 December 2007 be expunged from the record, to the extent that any of the Materials are found not to be important to a reasonable examiner in deciding upon patentability ("Criteria"), Petitioner requests that all of the Materials, or any portion of such Materials not meeting the Criteria, be expunged and removed from the official file for the above-identified application

The information submitted is not deemed relevant/important to the determination of patentability by the examiner of record, in view of not being applied.

The Re-Submitted petition is **GRANTED.**

The Previous Petition filed November 13, 2007, was dismissed on December 21, 2007, as being premature, because *the application has **not been allowed or abandoned**.*

As noted in MPEP 724.06:

> 37 CFR 1.59 provides that information, other than the original disclosure of the application, may be expunged from the file wrapper provided a petition to expunge under 37 CFR 1.59(b) and the required fee set forth in 37 CFR 1.17(g) are filed, and further that petitioner has established to the satisfaction of the Director that the return of the information is appropriate.

Pursuant to MPEP § 724.05, Petitioner makes the following statements:

1. The materials are proprietary subject to a legal obligation in: Commission of European Communities vs. Microsoft, Case No. COMP/C-3/37792 (hereafter, "***Litigation***").

2. The Materials have ***not otherwise been made public***.

3. Petitioner ***commits to retain the Materials*** for the ***period of any patent*** with regard to which the Materials are submitted.

4. This petition to expunge is being made ***on behalf of the party in interest*** on whose behalf the Materials were submitted.

5. The appropriate fee, as set forth in 37 C.F.R. § 1.17(g), should be charged for a large entity to Deposit Account No. 13-2725.

NOTE: The fee has already been paid and the Decision on Petition indicated that no further fee is required for filing of this Re-submitted Petition to Expunge.

Applicant is required to retain the expunged material(s) for the life of any patent which issues on the above-identified application.

The Re-Submitted petition is **GRANTED.**

The requested material has been expunged from the official file.

Any inquiry regarding this decision should be directed to Gail Hayes, Quality Assurance Specialist, at (571) 272-3591.

_____/Gail Hayes/_____
Gail Hayes
WQAS 2110
Technology Center 2100
Computer Architecture, Software and Information Security

UNITED STATES PATENT AND TRADEMARK OFFICE

Commissioner for Patents
United States Patent and Trademark Office
P.O. Box 1450
Alexandria, VA 22313-1450
www.uspto.gov

Brinks Hofer Gilson & Lione
P.O. Box 10395
Chicago, IL 60610

COPY MAILED

JUL 21 2008

OFFICE OF PETITIONS

In re Application of:	:	
Alexander Lisheng Huang	:	LETTER REGARDING
Application No. 10/737710	:	PATENT TERM ADJUSTMENT
Filing or 371(c) Date: 12/15/2003	:	
Atty Docket No. 8285/650	:	

This letter is in response to the "REQUEST FOR REVIEW OF PATENT TERM ADJUSTMENT," filed January 10, 2008. Pursuant to applicant's duty of good faith and candor to the Office, applicant discloses that the initial determination of patent term adjustment of 138 days may extend the term of this patent by too many days.

The request for review of the determination of patent term adjustment (PTA) is **granted**.

The Office has updated the PAIR screen to reflect that the correct Patent Term Adjustment (PTA) determination at the time of the mailing of the Notice of Allowance **fifty-seven (57) days**. A copy of the updated PAIR screen, showing the correct determination, is enclosed.

On December 26, 2007, the Office mailed the Determination of Patent Term Adjustment under 35 U.S.C. 154(b) in the above identified application. The Notice stated that the patent term adjustment (PTA) to date is one hundred thirty-eight (138) days.

The Office initially determined a patent term adjustment of one hundred thirty-eight (138) days based on an adjustment for PTO delay of two hundred-forty (240) days pursuant to 37 C.F.R. § 1.702(a)(1), reduced by one hundred two (102) of applicant delay pursuant to 37 C.F.R. 1.704(b).

37 C.F.R. § 1.704(b) states:

> With respect to the grounds for adjustment set forth in §§ 1.702(a) through (e), and in particular the ground of adjustment set forth in § 1.702(b), an applicant shall be deemed to have failed to engage in reasonable efforts to conclude processing or examination of an application for the cumulative total of any

> periods of time in excess of three months that are taken to reply to any notice or action by the Office making any rejection, objection, argument, or other request, measuring such three-month period from the date the notice or action was mailed or given to the applicant, in which case the period of adjustment set forth in § 1.703 shall be reduced by the number of days, if any, beginning on the day after the date that is three months after the date of mailing or transmission of the Office communication notifying the applicant of the rejection, objection, argument, or other request and ending on the date the reply was filed. The period, or shortened statutory period, for reply that is set in the Office action or notice has no effect on the three-month period set forth in this paragraph.;

Applicant should have been assessed additional delay of forty-nine (49) days pursuant to 37 C.F.R. § 1.704(b). Applicant filed a Request for Continued Examination ("RCE") and Amendment on November 14, 2006, in response to a final Office action mailed June 26, 2006, which was forty-nine (49) days after September 26, 2006 - three (3) months after the date of mailing of the final Office action.

A further review of the application history reveals that Applicant should have been assessed an additional delay of thirty-two (32) days pursuant to 37 C.F.R. § 1.704(c)(7). 37 CFR 1.704(c) provides, in pertinent part, that:

> Circumstances that constitute a failure of the applicant to engage in reasonable efforts to conclude processing or examination of an application also include the following circumstances, which will result in the following reduction of the period of adjustment set forth in § 1.703 to the extent that the periods are not overlapping:
>
> > (7) Submission of a reply having an omission (§1.135(c)), in which case the period of adjustment set forth in § 1.703 shall be reduced by the number of days, if any, beginning on the day after the date the reply having an omission was filed and ending on the date that the reply or other paper correcting the omission was filed;

In this instance, the Office mailed a Notice to File Missing Parts of Nonprovisional Application on March 26, 2007. Applicant filed a "Response to Notice to File Missing Parts of Application Filing Date Granted," on May 27, 2004. However, the reply was incomplete. Applicant was notified in a Notice of Incomplete Reply (Nonprovisional). Applicant filed a Response to Notice of Incomplete Reply on June 28, 2004. Pursuant to 37 CFR § 1.704(c)(7) the patent term adjustment should have been reduced by thirty-two (32) days for applicant delay, from May 28, 2004, to June 28, 2004, in correcting an omission in the reply to the Notice to File Missing Parts of Nonprovisional Application.

In view thereof, the correct determination of patent term adjustment at the time of the mailing of the Notice of Allowance is **fifty-seven (57) days** ((240 days of PTO delay, reduced by 183 (32+73+49+29)) days of applicant delay), subject to any terminal disclaimer.

As this letter was submitted as an advisement to the Office of an error in applicant's favor, the Office will not assess the $200.00 fee under 37 CFR 1.18(e). The Office thanks applicant for their good faith and candor in bringing this to the attention of the Office.

The file is being forwarded to the Office of Data Management for processing into a patent. The patent term adjustment indicated on the patent (as shown on the Issue Notification mailed about three weeks prior to patent issuance) will include any additional adjustment accrued both for Office delay in issuing the patent more than four months after payment of the issue fee and satisfaction of all outstanding requirements, and for the Office taking in excess of three years to issue the patent (to the extent that the three-year period does not overlap with periods already accorded).

Telephone inquiries specific to this matter should be directed to Attorney Derek Woods, at (571) 272-3232.

Nancy Johnson
Senior Petitions Attorney
Office of Petitions

Enclosure: Updated PAIR Screen

Day : Monday
Date: 7/21/2008

PALM INTRANET

Time: 07:49:56

PTA Calculations for Application: 10/737710			
Application Filing Date:	12/15/2003	PTO Delay (PTO):	240
Issue Date of Patent:		Three Years:	0
Pre-Issue Petitions:	0	Applicant Delay (APPL):	102
Post-Issue Petitions:	0	Total PTA (days):	57
PTO Delay Adjustment:	-81		

File Contents History

Number	Date	Contents Description	PTO	APPL	START
70	07/07/2008	ADJUSTMENT OF PTA CALCULATION BY PTO		32	
69	07/07/2008	ADJUSTMENT OF PTA CALCULATION BY PTO		49	
62	12/26/2007	MAIL NOTICE OF ALLOWANCE			
61	12/19/2007	ISSUE REVISION COMPLETED			
60	12/19/2007	DOCUMENT VERIFICATION			
59	12/19/2007	NOTICE OF ALLOWANCE DATA VERIFICATION COMPLETED			
58	12/18/2007	NOTICE OF ALLOWABILITY			
57	11/01/2007	DATE FORWARDED TO EXAMINER			
56	10/19/2007	RESPONSE AFTER NON-FINAL ACTION			
55	10/04/2007	CASE DOCKETED TO EXAMINER IN GAU			
54	10/01/2007	MAIL NON-FINAL REJECTION			
53	09/27/2007	NON-FINAL REJECTION			
51	08/07/2007	REQUEST FOR PRE-APPEAL CONFERENCE FILED			
50	08/07/2007	NOTICE OF APPEAL FILED			
49	06/25/2007	MAIL FINAL REJECTION (PTOL - 326)			
48	06/21/2007	FINAL REJECTION			
47	06/05/2007	DATE FORWARDED TO EXAMINER			
46	05/24/2007	RESPONSE AFTER NON-FINAL ACTION		29	44
45	05/24/2007	REQUEST FOR EXTENSION OF TIME - GRANTED			
44	01/25/2007	MAIL NON-FINAL REJECTION			
43	01/22/2007	NON-FINAL REJECTION			
42	12/03/2006	DATE FORWARDED TO EXAMINER			
41	11/14/2006	AMENDMENT SUBMITTED/ENTERED WITH FILING OF CPA/RCE			

40	12/03/2006	DATE FORWARDED TO EXAMINER			
39	11/14/2006	REQUEST FOR CONTINUED EXAMINATION (RCE)			
38	12/03/2006	DISPOSAL FOR A RCE/CPA/129 (EXPRESS ABANDONMENT IF CPA)			
37	11/14/2006	REQUEST FOR EXTENSION OF TIME - GRANTED			
36	11/14/2006	WORKFLOW - REQUEST FOR RCE - BEGIN			
35	06/26/2006	MAIL FINAL REJECTION (PTOL - 326)			
34	06/22/2006	FINAL REJECTION			
33	12/15/2003	INFORMATION DISCLOSURE STATEMENT CONSIDERED			
32	08/09/2004	INFORMATION DISCLOSURE STATEMENT CONSIDERED			
31	06/15/2006	CASE DOCKETED TO EXAMINER IN GAU			
30	06/12/2006	CASE DOCKETED TO EXAMINER IN GAU			
29	04/19/2006	DATE FORWARDED TO EXAMINER			
28	03/27/2006	RESPONSE AFTER NON-FINAL ACTION		73	25
27	03/27/2006	REQUEST FOR EXTENSION OF TIME - GRANTED			
26	03/21/2006	CASE DOCKETED TO EXAMINER IN GAU			
25	10/13/2005	MAIL NON-FINAL REJECTION	240		-1
24	10/03/2005	NON-FINAL REJECTION			
23	09/08/2005	CASE DOCKETED TO EXAMINER IN GAU			
22	11/30/2004	CASE DOCKETED TO EXAMINER IN GAU			
21.7	08/09/2004	INFORMATION DISCLOSURE STATEMENT (IDS) FILED			
21	08/09/2004	INFORMATION DISCLOSURE STATEMENT (IDS) FILED			
20	09/22/2004	CASE DOCKETED TO EXAMINER IN GAU			
19	09/04/2004	IFW TSS PROCESSING BY TECH CENTER COMPLETE			
18	08/09/2004	REFERENCE CAPTURE ON IDS			
16	12/15/2003	REFERENCE CAPTURE ON IDS			
15.7	12/15/2003	INFORMATION DISCLOSURE STATEMENT (IDS) FILED			
15	12/15/2003	INFORMATION DISCLOSURE STATEMENT (IDS) FILED			
14	12/15/2003	PRELIMINARY AMENDMENT			
13	09/04/2004	CASE DOCKETED TO EXAMINER IN GAU			

12	07/26/2004	APPLICATION RETURN FROM OIPE			
11	07/26/2004	APPLICATION RETURN TO OIPE			
10	07/26/2004	APPLICATION DISPATCHED FROM OIPE			
9	07/26/2004	APPLICATION IS NOW COMPLETE			
8	06/28/2004	ADDITIONAL APPLICATION FILING FEES			
7	06/28/2004	A STATEMENT BY ONE OR MORE INVENTORS SATISFYING THE REQUIREMENT UNDER 35 USC 115, OATH OF THE APPLIC			
6	05/27/2004	PAYMENT OF ADDITIONAL FILING FEE/PREEXAM			
4	02/18/2004	CLEARED BY OIPE CSR			
3	02/18/2004	CASE CLASSIFIED BY OIPE			
2	01/07/2004	IFW SCAN & PACR AUTO SECURITY REVIEW			
1	12/15/2003	INITIAL EXAM TEAM NN			

Search Another: Application# Search

EXPLANATION OF PTA CALCULATION

EXPLANATION OF PTE CALCULATION

To go back, right click here and select Back. To go forward, right click here and select Forward. To refresh, right click here and select Refresh.

Back to OASIS | Home page

UNITED STATES PATENT AND TRADEMARK OFFICE

COMMISSIONER FOR PATENTS
UNITED STATES PATENT AND TRADEMARK OFFICE
P.O. BOX 1450
ALEXANDRIA, VA 22313-1450
www.uspto.gov

FAY, SHARPE, FAGAN,MINNICH & MCKEE, LLP
7TH FLOOR
1100 SUPERIOR AVENUE
CLEVELAND, OH 44114-2516

COPY MAILED

FEB 21 2006

OFFICE OF PETITIONS

In re Application of :
ST-PIERRE, et al. : DECISION ON PETITION
Application No. 10/737,719 :
Filed: December 16, 2003 :
Atty. Dkt. No.: CLWZ 2 00153 :

This decision is in response to the "PETITION TO NOTICE OF ABANDONMENT IMPROPERLY ISSUED," filed December 9, 2005. This matter is being treated under 37 CFR 1.181 as a petition to withdraw the holding of abandonment.

The petition under 37 CFR 1.181 is hereby **GRANTED**.

This application was held abandoned July 20, 2005, for failure to timely file a proper response to the non-final Office action mailed April 19, 2005. The non-final Office action set a three month shortened statutory period for reply. Notice of Abandonment was mailed November 29, 2005.

Petitioner argues that a response to the non-final Office action was timely submitted July 15, 2005 via facsimile in accordance with the Certificate of Transmission procedures outlined at 37 CFR 1.8. Petitioner has included a copy of the response to the non-final Office action bearing a certificate of facsimile dated July 15, 2005 in accordance with 37 CFR 1.8.

A review of the application file does not indicate receipt of the response purportedly submitted July 15, 2005, however, the response will be considered timely as it complies with the requirements of 37 CFR 1.8(b) in that (1) the Office was promptly informed of the previous timely mailing, (2) a copy of the previously submitted correspondence with certificate of facsimile thereon has been supplied, and (3) statements attesting to the previous timely mailing have been submitted.

In view of the above, the Notice of Abandonment is hereby VACATED and the Notice of Abandonment is WITHDRAWN.

This application is being forwarded to Technology Center 3600 for further processing.

Telephone inquiries regarding this decision should be directed to the undersigned at (703) 305-0310.

Alesia M. Brown
Petitions Attorney
Office of Petitions

UNITED STATES PATENT AND TRADEMARK OFFICE

UNITED STATES DEPARTMENT OF COMMERCE
United States Patent and Trademark Office
Address: COMMISSIONER FOR PATENTS
P.O. Box 1450
Alexandria, Virginia 22313-1450
www.uspto.gov

APPLICATION NO.	FILING DATE	FIRST NAMED INVENTOR	ATTORNEY DOCKET NO.	CONFIRMATION NO.
10/737,726	12/15/2003	Jason Roberts	14917.0469US01	5849

27488 7590 12/27/2007
MERCHANT & GOULD (MICROSOFT)
P.O. BOX 2903
MINNEAPOLIS, MN 55402-0903

EXAMINER	
KHATRI, ANIL	
ART UNIT	**PAPER NUMBER**
2191	

MAIL DATE	DELIVERY MODE
12/27/2007	PAPER

Please find below and/or attached an Office communication concerning this application or proceeding.

The time period for reply, if any, is set in the attached communication.

UNITED STATES PATENT AND TRADEMARK OFFICE

COMMISSIONER FOR PATENTS
UNITED STATES PATENT AND TRADEMARK OFFICE
P.O. BOX 1450
ALEXANDRIA, VA 22313-1450
www.uspto.gov

Timothy B. Scull
Merchant & Gould (Microsoft)
P.O. Box 2903
Minneapolis, MN 55402-0903

MAILED

DEC 27 2007

TECHNOLOGY CENTER 2100

In re Application of:
Jason ROBERTS et al.
Appl. No.: 10/737,726
Filed: December 15, 2003
For: SYSTEMS AND METHODS FOR A SOFTWARE DISTRIBUTION SERVICE

DECISION ON PETITION
UNDER 37 CFR § 1.59

This is a decision on the petition under 37 CFR § 1.59(b), filed on 11 December 2007, to expunge information submitted pursuant to MPEP § 724.05.

The petition is **DISMISSED**.

Petitioner requests that the information submitted on 11 December 2007 be expunged from the record if found not to be important to a reasonable examiner in deciding whether to allow the application to issue as a patent. The petition fee set forth in 37 CFR § 1.17(g) has been paid.

The petition is premature because the application has not been allowed or abandoned. Accordingly, it is not appropriate to make a final determination of whether or not the material requested to be expunged is "material," with "materiality" being defined as any information which the examiner considers as being important to a determination of patentability of the claims. Thus, the petition to expunge must be dismissed at this time.

During prosecution on the merits, the examiner will determine whether or not the information submitted on 11 December 2007 is considered to be "material." Once prosecution on the merits is closed, applicant may re-submit a petition to expunge the information. No further fee is required for such a second submission of a petition under 37 CFR § 1.59 to expunge information. If the information is not considered by the examiner to be material, the information will be expunged from the application and may be returned to applicant.

Any inquiry concerning this decision should be directed to the undersigned whose telephone number is (571) 272-3613.

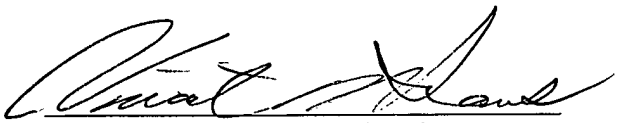

Vincent N. Trans, SPRE/QAS
Technology Center 2100
Computer Architecture, Software, and
Information Security

UNITED STATES PATENT AND TRADEMARK OFFICE

UNITED STATES DEPARTMENT OF COMMERCE
United States Patent and Trademark Office
Address: COMMISSIONER FOR PATENTS
P.O. Box 1450
Alexandria, Virginia 22313-1450
www.uspto.gov

APPLICATION NO.	FILING DATE	FIRST NAMED INVENTOR	ATTORNEY DOCKET NO.	CONFIRMATION NO.
10/737,726	12/15/2003	Jason Roberts	14917.0469US01	5849

7590 05/13/2009

Microsoft Corporation
One Microsoft Way
Attention: Patent Group - Docketing Department
Redmond, WA 98052

EXAMINER	
CHOW, CHIH CHING	
ART UNIT	**PAPER NUMBER**
2191	

MAIL DATE	DELIVERY MODE
05/13/2009	PAPER

Please find below and/or attached an Office communication concerning this application or proceeding.

The time period for reply, if any, is set in the attached communication.

UNITED STATES PATENT AND TRADEMARK OFFICE

COMMISSIONER FOR PATENTS
UNITED STATES PATENT AND TRADEMARK OFFICE
P.O. BOX 1450
ALEXANDRIA, VA 22313-1450
www.uspto.gov

Gregory D. Leibold
Microsoft Corporation
One Microsoft Way
Attn: Patent Group – Docketing Department
Redmond, WA 98052

In re Application of:
ROBERTS et al
Appl. No.: 10/737,726
Filed: December 15, 2003
For: MANAGEING SOFTWARE UPDATES AND A SOFTWARE DISTRIBUTION SERVICE

DECISION ON PETITION UNDER 37 CFR 1.59

This is a decision on the renewed petition under 37 CFR 1.59(b), filed on 24 October 2008, to expunge information submitted on 11 December 2007.

The petition is **GRANTED**.

Petitioner requests that the information submitted on 11 December 2007 be expunged from the record. Petitioner states that the information should be expunged from the record if found not to be important to a reasonable examiner in deciding whether to allow the application to issue as a patent. The petition fee set forth in 37 CFR § 1.17(g) has been paid.

Applicant is required to retain the expunged documents for the life of any patent, which issues on the above-identified application.

The expunged documents are herewith returned. However, the petitions and support documents will not be returned.

Any inquiry concerning this decision should be directed to the undersigned whose telephone number is (571) 272-3613.

/Vincent N. Trans/
Vincent N. Trans, SPRE/QAS
Technology Center 2100
Computer Architecture and Software

Attachments: One (1) sealed envelope.

UNITED STATES PATENT AND TRADEMARK OFFICE

Commissioner for Patents
United States Patent and Trademark Office
P.O. Box 1450
Alexandria, VA 22313-1450
www.uspto.gov

THELEN REID BROWN RAYSMAN & STEINER LLP
900 THIRD AVENUE
NEW YORK NY 10022

COPY MAILED

JUL 18 2007

OFFICE OF PETITIONS

In re Application of :
Janet L. Wiener, et al. :
Application No. 10/737,729 : ON PETITION
Filed: December 16, 2003 :
Attorney Docket No. 5598/29CONT. :

This is a decision on the petition under 37 CFR 1.137(b) to revive the above-identified application, filed March 21, 2007.

The petition is **GRANTED**.

The application became abandoned for failure to pay the issue fee on or before October 19, 2006. This decision precedes the mailing of a Notice of Abandonment. On March 21, 2007, the present petition was filed.

The petition satisfies the requirements of 37 CFR 1.137(b) in that the petitioner has supplied (1) the reply in the form of the $1400 issue fee and the $300 publication fee; (2) the petition fee of $1500; and (3) an adequate statement of unintentional delay[1].

The application is being referred to the Office of Publications to be processed into a patent.

It is noted that the person signing the instant petition requested a change of correspondence address on October 16, 2006 to the address given in the instant petition. There is, however, no indication that the person signing the instant petition was ever given a power of attorney or authorization of agent to prosecute the above-identified application. However, in accordance with 37 CFR 1.34(a), the signature of Seth H. Ostrow appearing on the petition shall constitute a representation to the United States Patent and Trademark Office that he is authorized to represent the particular party on whose behalf he acts. A courtesy copy of this decision is being mailed to petitioner. If Mr. Ostrow desires to receive future correspondence regarding this application, then the appropriate power of attorney or authorization of agent must be submitted. All future correspondence regarding this application file will be directed solely to the address of record.

[1] While it is not apparent whether the person signing the statement of unintentional delay was in a position to have firsthand or direct knowledge of the facts and circumstances of the delay at issue, such statement is being treated as having been made as the result of a reasonable inquiry into the facts and circumstances of such delay. See 37 CFR 10.18(b) and Changes to Patent Practice and Procedure; Final Rule Notice, 62 Fed. Reg. 53131, 53178 (October 10, 1997), 1203 Off. Gaz. Pat. Office 63, 103 (October 21, 1997).

Telephone inquires related to this decision should be directed to the undersigned at (571) 272-3204. Telephone inquiries related to processing at Publishing Division should be directed to (571) 272-4200.

Sherry D. Brinkley
Petitions Examiner
Office of Petitions

cc: SETH H. OSTROW
DREIER LLP
499 PARK AVE
NEW YORK, NY 10022

UNITED STATES PATENT AND TRADEMARK OFFICE

Commissioner for Patents
United States Patent and Trademark Office
P.O. Box 1450
Alexandria, VA 22313-1450
www.uspto.gov

KNOBBE MARTENS OLSON & BEAR LLP
2040 MAIN STREET
FOURTEENTH FLOOR
IRVINE, CA 92614

COPY MAILED

JUN 23 2009

OFFICE OF PETITIONS

In re Application of
Matthew Bell
Application No. 10/737,730
Filed: December 15, 2003
Attorney Docket No. PA4123US

ON PETITION

This is a decision on the petition filed May 12, 2009 under 37 CFR 1.137(b), to revive the above-identified application.

The petition is **GRANTED.**

The above-identified application became abandoned for failure to submit the Issue fee in a timely manner in reply to the Notice of Allowance mailed December 16, 2008, which set a statutory period for reply of three (3) months. Accordingly, the above-identified application became abandoned on March 17, 2009.

The petition satisfies the conditions for revival pursuant to the provisions of 37 CFR 1.137(b) in that (1) the reply in the form of payment of the Issue fee; (2) the petition fee; (3) the required statement of unintentional delay have been received. Accordingly, the issue fee is accepted as having been unintentionally delayed.

Telephone inquiries concerning this decision should be directed to the undersigned at (571) 272-3210.

This matter is being referred to the Office of Data Management for further processing.

Irvin Dingle
Petitions Examiner
Office of Petitions

UNITED STATES PATENT AND TRADEMARK OFFICE

UNITED STATES DEPARTMENT OF COMMERCE
United States Patent and Trademark Office
Address: COMMISSIONER FOR PATENTS
P.O. Box 1450
Alexandria, Virginia 22313-1450
www.uspto.gov

KNOBBE MARTENS OLSON & BEAR LLP
2040 MAIN STREET
FOURTEENTH FLOOR
IRVINE, CA 92614

Mail Date: 04/20/2010

Applicant	: Matthew Bell	: DECISION ON REQUEST FOR
Patent Number	: 7576727	: RECALCULATION of PATENT
Issue Date	: 08/18/2009	: TERM ADJUSTMENT IN VIEW
Appliction No	: 10/737,730	: OF WYETH AND NOTICE OF INTENT TO
Filed	: 12/15/2003	: ISSUE CERTIFICATE OF CORRECTION
		:

The Request for Recalculation is **GRANTED** to the extent indicated.

The patent term adjustment has been determined to be **782** days. The USPTO will *sua sponte* issue a certificate of correction reflecting the amount of PTA days determined by the recalculation.

Prior to the issuance of the certificate of correction, the USPTO will afford patentee an opportunity to be heard and request reconsideration. Accordingly, patentee has **one month or thirty (30) days**, whichever is longer, to file a request for reconsideration of this patent term adjustment calculation. See 35 U.S.C. 154(b)(3)(B)(ii) and 37 CFR 1.322(a)(4). No extensions of time will be granted under 37 CFR 1.136.

Patentee should use document code PET.OP if electronically filing a request for reconsideration of this patent term adjustment calculation. The patentee must also include the information required by 37 CFR 1.705(b)(2) and the fee required by 37 CFR 1.18(e). If patentee does not file a timely request for reconsideration of this patent term adjustment calculation including the information required by 37 CFR 1.705(b)(2) and the fee required by 37 CFR 1.18(e), the USPTO will issue a certificate of correction reflecting the PTA determination noted above.

Patentee should be aware that in order to preserve the right to review in the United States District Court for the District of Columbia of the USPTO patent term adjustment determination, patentee must ensure that he or she also take the steps required under 35 U.S.C. 154(b)(4)(A) in a timely manner. Nothing in the request for recalculation should be construed as providing an alternative time frame for commencing a civil action under 35 U.S.C. 154(b)(4)(A).

Any questions concerning this decision should be directed to the Office of Patent Legal Administration at 571-272-7702.

UNITED STATES PATENT AND TRADEMARK OFFICE

Commissioner for Patents
United States Patent and Trademark Office
P.O. Box 1450
Alexandria, VA 22313-1450
www.uspto.gov

TRASK BRITT
P.O. BOX 2550
SALT LAKE CITY, UT 84110

COPY MAILED

OCT 19 2004

OFFICE OF PETITIONS

In re Application of :
Brophy et al. :
Application No. 10/737,733 : ON PETITION
Filed: December 16, 2003 :
Attorney Docket No. 1791-5080.1US :

This is a notice regarding your request for acceptance of a fee deficiency submission under 37 CFR 1.28. On September 1, 1998, the Court of Appeals for the Federal Circuit held that 37 CFR 1.28(c) is the sole provision governing the time for correction of the erroneous payment of the issue fee as a small entity. **See DH Technology v. Synergystex International, Inc. 154 F.3d 1333, 47 USPQ2d 1865 (Fed. Cir. Sept. 1, 1998).**

The Office no longer investigates or rejects original or reissue applications under 37 CFR 1.56. **1098 Off. Gaz. Pat. Office 502 (January 3, 1989).** Therefore, nothing in this Notice is intended to imply that an investigation was done.

Your fee deficiency submission under 37 CFR 1.28 is hereby **ACCEPTED**.

Inquiries related to this communication should be directed to the undersigned at (571) 272-3206.

Liana Chase
Petitions Examiner
Office of Petitions
Office of the Deputy Commissioner
for Patent Examination Policy

UNITED STATES PATENT AND TRADEMARK OFFICE

Commissioner for Patents
United States Patent and Trademark Office
P.O. Box 1450
Alexandria, VA 22313-1450
www.uspto.gov

HARNESS, DICKEY & PIERCE PLC
5445 CORPORATE DRIVE
SUITE 400
TROY, MI 48098

COPY MAILED

JAN 10 2007

OFFICE OF PETITIONS

In re Application of :
Sehal Sutardja :
Application No. 10/737,743 : DECISION GRANTING PETITION
Filed: December 18, 2000 : UNDER 37 CFR 1.313(c)(2)
Attorney Docket No. MP0020 :

This is a decision on the petition, filed July 22, 2005, under 37 CFR 1.313(c)(2) to withdraw the above-identified application from issue after payment of the issue fee.

The petition is **GRANTED**, *nunc pro tunc*.

The file record discloses the following:

- A first Notice of Allowance and Fee(s) Due was mailed on December 21, 2004, requiring submission of a $1,400 issue fee. No drawings were required by the Notice of Allowability.
- On March 21, 2005, the issue fee was timely paid.
- On July 22, 2005, a petition to withdraw from issue, a request for continued examination (RCE) under 37 CFR 1.114, and an information disclosure statement were filed.
- Thereafter, on September 30, 2005, the Examiner issued a non-final Office action, prior to the rendering of any decision on the petition under 37 CFR 1.313(c)(2) to withdraw this application from issue.

It is noted that, although the petition to withdraw from issue had not been acted upon by the appropriate deciding official of the U.S. Patent and Trademark Office, the Technology Center processed the request for continued examination (RCE) under 37 CFR 1.114, prosecuted the application, and ultimately issued a new Notice of Allowance and Fee(s) Due and Notice of Allowability on April 20, 2006. The issue fee was paid on July 11, 2006.

Where an issue fee has been paid and an RCE is subsequently filed, the RCE is not a proper filing unless a petition to withdraw from issue has been granted by an appropriate deciding official. Therefore, the examiner was without authority to act further in this case absent a grantable

petition withdrawing the application from issue. Nevertheless, in view of this decision on petition, the RCE is now considered a proper filing and the actions of the examiner taken thereafter are hereby ratified.

This application is currently in the Office of Publications awaiting processing into a patent.

Frances Hicks
Petitions Examiner
Office of Petitions

UNITED STATES PATENT AND TRADEMARK OFFICE

Commissioner for Patents
United States Patent and Trademark Office
P.O. Box 1450
Alexandria, VA 22313-1450
www.uspto.gov

RADER FISHMAN & GRAUER PLLC
LION BUILDING
1233 20TH STREET N.W., SUITE 501
WASHINGTON, DC 20036

COPY MAILED

NOV 0 9 2004

OFFICE OF PETITIONS

In re Application of :
Masafumi Ozawa :
Application No. 10/737,798 :
Filed: December 18, 2003 :
Attorney Docket No. SON-1963/DIV2 :

DECISION GRANTING PETITION

This is a decision on the petition filed September 10, 2004, requesting that the above-identified application be accorded a filing date of December 18, 2003, with six sheets of drawings as part of the original disclosure.

The petition is **granted**.

On December 18, 2003, the above-identified application was filed. On July 28, 2004, the Office of Initial Patent Examination mailed a "Notice of Incomplete Nonprovisional Application" (the "Notice"), stating that the application had not been accorded a filing date because drawings were not found with the original application papers, but were believed to be required in order to accord the application a filing date. The Notice allowed a non-extendable two-month period for reply beginning from the mailing date of the Notice.

In response, on September 10, 2004, applicants filed the present petition, a copy of the six sheets of drawings, and a postcard receipt date-stamped by the Office acknowledging having received six sheets of drawings on December 18, 2003, among other items.

Upon review of the record, the drawings were not located among the application papers. The evidence is convincing that the application papers deposited December 18, 2003, included six sheets of drawings. Therefore, the application, including the six sheets of drawings was complete on filing and entitled a filing date of December 18, 2003.

The application file is being returned to the Office of Initial Patent Examination for further processing with a filing date of December 18, 2003, using the six sheets of drawings filed December 18, 2003.

Any inquiries related to this decision should be directed to the undersigned at (571) 272-3222.

Kenya A. McLaughlin
Petitions Attorney
Office of Petitions

UNITED STATES PATENT AND TRADEMARK OFFICE

Commissioner for Patents
United States Patent and Trademark Office
P.O. Box 1450
Alexandria, VA 22313-1450
www.uspto.gov

STAAS & HALSEY LLP
SUITE 700
1201 NEW YORK AVENUE, N.W.
WASHINGTON DC 20005

COPY MAILED

DEC 1 1 2008

OFFICE OF PETITIONS

In re Application of :
Akitake Takamatsu :
Application No. 10/737,806 :
Filed: December 18, 2003 : ON PETITION
Attorney Docket No: 1046.1304 :

This is a decision on the petition to withdraw the holding of abandonment, filed November 26, 2008, under 37 CFR 1.181, in accordance with the reasoning of the decision in Delgar Inc. v. Schuyler, 172 USPQ 513.

The petition is **GRANTED**.

This application became abandoned on July 11, 2008, for failure to file a timely response to the non-Final Office Action mailed April 10, 2008, which set a three (3) month statutory period for reply. Accordingly, a Notice of Abandonment was mailed November 13, 2008. Petitioner asserts that the non-Final Office Action was never received.

The file record discloses that the Office Action was mailed to the address of record which is the same address used on all correspondences from the USPTO including the Notice of Abandonment. Petitioner has provided a copy of the docket to show that the Office Action mailed April 10, 2008 was not received. Petitioner also explains that after searching the file and docket records, where receipt of the office action would have been indicated if it had been received, it was concluded that no correspondence was received for this matter from the USPTO.

In that the statement from the petitioner and the exhibit from the docket record for the instant matter show no entry indicating receipt of the non-Final Office Action mailed April 10, 2008, it is apparent that it was not received. The evidence submitted corroborates non-receipt of the Office Action.

In view of the facts set forth in the petition, it is concluded that the Office Action was never received at the address of record. Accordingly, the holding of abandonment is withdrawn and no petition fee is due.

This matter is being referred to Technology Center 2454 for a re-mailing of the non-Final Office Action and for a restarting of the period for response.

Telephone inquiries concerning this matter should be directed to the undersigned Petitions Attorney at (571) 272-3212.

Patricia Faison-Ball
Senior Petitions Attorney
Office of Petitions

UNITED STATES PATENT AND TRADEMARK OFFICE

Commissioner for Patents
United States Patent and Trademark Office
P.O. Box 1450
Alexandria, VA 22313-1450
www.uspto.gov

KED & ASSOCIATES, LLP
PO BOX 221200
CHANTILLY, VA 20153-1200

MAILED

APR 09 2009

OFFICE OF PETITIONS

In re Application of :
Byung Jun Mun, et al. :
Application No. 10/737,820 : DECISION ON PETITION
Filed: December 18, 2003 :
Attorney Docket No. YHK-0124 :

This is a decision on the petitions, filed May 14, 2008, under 37 CFR 1.181 (no fee) requesting withdrawal of the holding of abandonment in the above-identified application, or in the alternative a petition under the unintentional provisions of 37 CFR 1.137(b) to revive the above-identified application.

There is no indication that the person signing the instant petition was ever given a power of attorney or authorization of agent to prosecute the above-identified application. In accordance with 37 CFR 1.34(a), the signature appearing on the petition shall constitute a representation to the United States Patent and Trademark Office that he/she is authorized to represent the particular party in whose behalf he/she acts. However, if petitioner desires to receive future correspondence regarding this application, the appropriate power of attorney or authorization of agent must be submitted. A courtesy copy of this decision is being mailed to petitioner. Nevertheless, all future correspondence regarding this application file will be directed solely to the address of record until otherwise instructed.

It is not apparent whether the statement of unintentional delay was signed by a person who would have been in a position of knowing that the entire delay in filing the required reply from the due date for the reply until the filing of a grantable petition pursuant to 37 CFR 1.137(b) was unintentional. Nevertheless, in accordance with 37 CFR 10.18, the statement is accepted as constituting a certification of unintentional delay. However, in the event that petitioner has no knowledge that the delay was unintentional, petitioner must make such an inquiry to ascertain that, in fact, the delay was unintentional. If petitioner discovers that the delay was intentional, petitioner must so notify the Office.

The petition is under 37 CFR 1.181 **GRANTED**.

This application was held abandoned for failure to timely pay the issue and publication fees on or before March 3, 2008, as required by the Notice of Allowance and Fee(s) Due (Notice), mailed December 3, 2007. Accordingly, the date of abandonment of this application is March 4, 2008.

Petitioner asserts that the Notice dated December 3, 2007 was not received.

A review of the written record indicates no irregularity in the mailing of the Notice, and, in the absence of any irregularity, there is a strong presumption that the Notice was properly mailed to the practitioner at the address of record. This presumption may be overcome by a showing that the Notice was not in fact received. In this regard, the showing required to establish the failure to receive the Notice must consist of the following:

1. a statement from practitioner stating that the Notice was not received by the practitioner;
2. a statement from the practitioner attesting to the fact that a search of the file jacket and docket records indicates that the Notice was not received; and
3. a copy of the docket record where the non-received Notice would have been entered and docketed had it been received must be attached to and referenced in the practitioner's statement.

See MPEP § 711.03(c) under subheading "Petition to Withdraw Holding of Abandonment Based on Failure to Receive Office Action," and "Withdrawing the Holding of Abandonment When Office Actions Are Not Received," 1156 Official Gazette 53 (November 16, 1993). The petition satisfies the above-stated requirements. Accordingly, the application was not abandoned in fact.

In view of the above, the Notice of Abandonment is hereby **vacated** and the holding of abandonment **withdrawn**.

Since petitioner has already satisfied the requirements listed in the Notice of Allowance by providing payment for the Issue fee and the filing of a proper terminal disclaimer, this application is being forwarded to the Office of Data Management for further processing in accordance with this decision on petition.

The petition under 37 CFR 1.137(b) is **DISMISSED AS MOOT**.

In view of the granting of the petition filed under 37 CFR 1.181, the $1540 fee petition fee under 1.137(b) submitted with the petition on May 14, 2008 is deemed un-necessary, the fee will also be credited to petitioner's deposit account.

Telephone inquiries concerning this decision should be directed to April M., Wise at (571) 272-1642. All other inquiries concerning this application should be directed to the Office of Data Management at their hotline 571-272-4100.

This application is being referred to the Office of Data Management for further processing in accordance with this decision on petition.

/Carl Friedman/
Carl Friedman
Petitions Examiner
Office of Petitions

UNITED STATES PATENT AND TRADEMARK OFFICE

UNITED STATES DEPARTMENT OF COMMERCE
United States Patent and Trademark Office
Address: COMMISSIONER FOR PATENTS
P.O. Box 1450
Alexandria, Virginia 22313-1450
www.uspto.gov

APPLICATION NO.	FILING DATE	FIRST NAMED INVENTOR	ATTORNEY DOCKET NO.	CONFIRMATION NO.
10/737,837	12/18/2003	Chang-Seob Kim	1568.1083	8056

49455 7590 03/04/2008

STEIN, MCEWEN & BUI, LLP
1400 EYE STREET, NW
SUITE 300
WASHINGTON, DC 20005

EXAMINER
WALKER, KEITH D

ART UNIT	PAPER NUMBER
1795	

MAIL DATE	DELIVERY MODE
03/04/2008	PAPER

Please find below and/or attached an Office communication concerning this application or proceeding.

The time period for reply, if any, is set in the attached communication.

UNITED STATES PATENT AND TRADEMARK OFFICE

Commissioner for Patents
United States Patent and Trademark Office
P.O. Box 1450
Alexandria, VA 22313-1450
www.uspto.gov

caf

Mailed: 3-4-08

In re application of	:	
Chang-Seob KIM et al.	:	DECISION ON
Serial No. 10/737,837	:	PETITION
Filed: December 18, 2003	:	
For: LITHIUM SECONDARY BATTERY	:	

This is a decision on the PETITION UNDER 37 CFR 1.181 mailed October 4, 2007.

On April 3, 2007, a non-final office action was mailed to applicants rejecting claim 28 under 35 USC 102(b) over U.S. Patent 6,492,058 to Watanabe; claims 1,12 and 34 under 35 USC 103 over U.S. Patent 6,492,058 to Watanabe; claims 1-4,12,18-20 and 28-34 under 35 USC 103 over U.S. Patent 6,492,058 to Watanabe in view of WO 01/598868; and claims 5-11,13-17, 21-27 and 35-37 over U.S. Patent 6,492,058 to Watanabe in view of U.S. Patent 6,709,785 to Lee and further in view of U.S. Patent 5,976,729 to Morishita. A reply to the office action was filed by Applicant on July 3, 2007. Additionally, applicants submitted an Information Disclosure Statements on May 17, 2007. On September 18, 2007, a final office action was mailed. In the final rejection, new grounds of rejection under 35 USC 102 and 103 were applied by the examiner. The final rejection included a rejection of claim 28 under 35 USC 102(b) over U.S. Patent 6,492,058 to Watanabe; a rejection of claims 28 and 34 under 35 USC 102(a) over JP Publication 2002-313295 (Yukio) and a rejection of claims 1-37 under 35 USC 103 over JP Publication 2002-313295 (Yukio) in view of U.S. Patent 6,936,374 to Ehara and U.S. Patent 5,976,729 to Morishita. On October 4, 2007 the instant petition under 37 CFR 1.181 was timely filed to formally request the withdrawal of finality of the September 18, 2007 office action. On December 13, 2007 a Request for Continued Examination was filed.

Petitioner argues that finality of the office action is improper because the examiner improperly applied Section 706.07 of the MPEP.

DECISION

A Request for Continued Examination has been filed. Accordingly, the petition for withdrawal of finality is **DISMISSED** as moot.

Jacqueline M. Stone, Director
Technology Center 1700
Chemical and Materials Engineering

STEIN, MCEWEN & BUI, LLP
1400 EYE STREET, NW
SUITE 300
WASHINGTON DC 20005

UNITED STATES PATENT AND TRADEMARK OFFICE

UNITED STATES DEPARTMENT OF COMMERCE
United States Patent and Trademark Office
Address: COMMISSIONER FOR PATENTS
P.O. Box 1450
Alexandria, Virginia 22313-1450
www.uspto.gov

STEIN MCEWEN, LLP
1400 EYE STREET, NW
SUITE 300
WASHINGTON, DC 20005

Mail Date: 04/20/2010

Applicant	: Chang-Seob Kim	: DECISION ON REQUEST FOR
Patent Number	: 7611797	: RECALCULATION of PATENT
Issue Date	: 11/03/2009	: TERM ADJUSTMENT IN VIEW
Appliction No	: 10/737,837	: OF WYETH AND NOTICE OF INTENT TO
Filed	: 12/18/2003	: ISSUE CERTIFICATE OF CORRECTION
		:

The Request for Recalculation is **GRANTED** to the extent indicated.

The patent term adjustment has been determined to be **994** days. The USPTO will *sua sponte* issue a certificate of correction reflecting the amount of PTA days determined by the recalculation.

Prior to the issuance of the certificate of correction, the USPTO will afford patentee an opportunity to be heard and request reconsideration. Accordingly, patentee has **one month or thirty (30) days**, whichever is longer, to file a request for reconsideration of this patent term adjustment calculation. See 35 U.S.C. 154(b)(3)(B)(ii) and 37 CFR 1.322(a)(4). No extensions of time will be granted under 37 CFR 1.136.

Patentee should use document code PET.OP if electronically filing a request for reconsideration of this patent term adjustment calculation. The patentee must also include the information required by 37 CFR 1.705(b)(2) and the fee required by 37 CFR 1.18(e). If patentee does not file a timely request for reconsideration of this patent term adjustment calculation including the information required by 37 CFR 1.705(b)(2) and the fee required by 37 CFR 1.18(e), the USPTO will issue a certificate of correction reflecting the PTA determination noted above.

Patentee should be aware that in order to preserve the right to review in the United States District Court for the District of Columbia of the USPTO patent term adjustment determination, patentee must ensure that he or she also take the steps required under 35 U.S.C. 154(b)(4)(A) in a timely manner. Nothing in the request for recalculation should be construed as providing an alternative time frame for commencing a civil action under 35 U.S.C. 154(b)(4)(A).

Any questions concerning this decision should be directed to the Office of Patent Legal Administration at 571-272-7702.

United States
Patent And
Trademark Office

P.O. Box 1450, Alexandria, Virginia 22313-1450 – www.uspto.gov

PETITION DECISION

05/25/04

Christian Austin-Hollands
PO Box 170325
San Francisco, CA 94117

Dear Applicant:

The Box PG Pub replacement drawings for application number 10/737849 received on 05/10/04 by the U. S. Patent and Trademark Office will be included for patent publication.

Telephone inquiries should be directed to Kaletus King, Office of Pre-Grant Publication 703 605-4283.

Kaletus King

Signature of Reviewer, Office of Pre-Grant Publication

UNITED STATES PATENT AND TRADEMARK OFFICE

COMMISSIONER FOR PATENTS
UNITED STATES PATENT AND TRADEMARK OFFICE
P.O. BOX 1450
ALEXANDRIA, VA 22313-1450
www.uspto.gov

VOLENTINE & WHITT
ONE FREEDOM SQUARE
11951 FREEDOM DRIVE
SUITE 1260
RESTON, VA 20190

COPY MAILED

MAY 18 2007

OFFICE OF PETITIONS

In re Application of :
Seong-Jin Jang :
Application No. 10/737,861 : DECISION ON PETITION
Filed: December 18, 2003 :
Attorney Docket No. SEC.1094 :

This is a decision on the petition under 37 CFR 1.137(b), filed February 2, 2007, to revive the above-identified application.

The petition is **GRANTED**.

This application became abandoned for failure to timely pay the issue and publication fees on or before December 15, 2006, as required by the Notice of Allowance and Fee(s) Due, mailed September 15, 2006. Accordingly, the date of abandonment of this application is December 16, 2006. A Notice of Abandonment was mailed on January 9, 2007.

The petition satisfies the requirements of 37 CFR 1.137(b) in that petitioner has supplied (1) the reply in the form of payment of the issue fee of $1,400 and the publication fee of $300, (2) the petition fee of $1,500, and (3) a proper statement of unintentional delay. Accordingly, the issue and publication fees are accepted as being unintentionally delayed.

Telephone inquiries concerning this decision should be directed to the undersigned at (571) 272-3218.

This application is being referred to Publishing Division for appropriate processing in accordance with this decision on petition.

Frances Hicks
Petitions Examiner
Office of Petitions

UNITED STATES PATENT AND TRADEMARK OFFICE

COMMISSIONER FOR PATENTS
UNITED STATES PATENT AND TRADEMARK OFFICE
P.O. BOX 1450
ALEXANDRIA, VA 22313-1450
www.uspto.gov

Paper No.

EVELYN M. SOMMER
30TH FLOOR
825 THIRD AVENUE
NEW YORK, NY 10022

COPY MAILED

SEP 22 2004

OFFICE OF PETITIONS

In re Application of :
Bashir Zakria :
Application No. 10/737,885 :
Filed: December 18, 2003 :
For: Neck Collar for Releiving Neck Pains : ON PETITION

This is a decision on the Response to Notice of Incomplete Non-Provisional Application, filed August 25, 2004, requesting the application be accorded a filing date of December 18, 2003, including 3 sheets of drawings containing Figures 1-5 described in the specification.

The petition is **granted**.

The application was filed on December 18, 2003. However, on July 28, 2004, the Office of Initial Patent Examination mailed a Notice of Incomplete Nonprovisional Application, noting that a filing date had NOT been accorded the application because the application had been deposited without drawings.

In response, Petitioner files the instant petition wherein Petitioner avers that 3 sheets of drawings were originally filed with the application on December 18, 2003, and were received by this Office as evidenced by the return-receipt postcard. In support, Petitioner provides a copy of a return receipt postcard acknowledging receipt of, *inter alia*, "sheets of drawing" on December 18, 2003.

A review of the return receipt postcard reveals that Petitioner is correct. The postcard acknowledges receipt of sheets of drawing on December 18, 2003. Petitioner has also re-submitted 3 sheets of drawings, comprising Figures 1 - 5, with the instant petition.

Evidence of receipt of any correspondence filed in the Patent and Trademark Office can be obtained by submitting a self-addressed postcard properly itemizing and identifying the paper or papers being filed. Upon receipt of the correspondence, the Patent and Trademark Office will check the listing on the post card against the papers submitted, making sure that all items listed are present and will then stamp the postcard with an Official date stamp and place the postcard in the outgoing mail. "A postcard receipt which itemizes and properly identifies the papers which are being filed serves as *prima facie* evidence of receipt in the PTO of all items listed thereon by the PTO." MPEP § 503.

The copy of 3 sheets of drawings, comprising Figures 1 - 5, supplied on August 25, 2004, will be used for examination purposes.

No petition fee has been charged and none is due.

The application will be returned to the Office of Initial Patent Examination for further processing as a nonprovisional application with a filing date of December 18, 2003, and an indication that 3 sheets of drawings were present on filing, using the 3 sheets of drawings filed on August 25, 2004.

Telephone inquiries concerning this matter should be directed to the undersigned at (703) 305-0014.

Derek L. Woods
Petitions Attorney
Office of Petitions

UNITED STATES PATENT AND TRADEMARK OFFICE

Commissioner for Patents
United States Patent and Trademark Office
P.O. Box 1450
Alexandria, VA 22313-1450
www.uspto.gov

PHILIP S. JOHNSON
JOHNSON & JOHNSON
ONE JOHNSON & JOHNSON PLAZA
NEW BRUNSWICK NJ 08933-7003

COPY MAILED

MAR 13 2008

OFFICE OF PETITIONS

In re Application of :
How-Lun Chen et al :
Application No. 10/737,942 : DECISION GRANTING PETITION
Filed: December 16, 2003 : UNDER 37 CFR 1.137(b)
Attorney Docket No. END-5207 :

This is a decision on the petition under 37 CFR 1.137(b), filed July 25, 2007, to revive the above-identified application.

The petition is **GRANTED**.

The petition satisfies the conditions for revival pursuant to the provisions of 37 CFR 1.137(b) in that (1) the reply in the form of an amendment; (2) the petition fee; and (3) the required statement of unintentional delay have been received. Accordingly, the reply to the Nonfinal Rejection of July 11, 2006, is accepted as having been unintentionally delayed.

An extension of time under 37 CFR 1.136 must be filed prior to the expiration of the maximum extendable period for reply. See In re Application of S., 8 USPQ2d 1630, 1631 (Comm'r Pats. 1988). Accordingly, since the $450 extension of time submitted with the petition on July 25, 2007, was subsequent to the maximum extendable period for reply, petitioner may request a refund of this fee by writing to the Office of Finance, Refund Section. A copy of this decision should accompany petitioner's request.

Telephone inquiries concerning this decision should be directed to the undersigned at (571) 272-3208.

This matter is being referred to Technology Center AU 3767.

Karen Creasy

Karen Creasy
Petitions Examiner
Office of Petitions

UNITED STATES PATENT AND TRADEMARK OFFICE

UNITED STATES DEPARTMENT OF COMMERCE
United States Patent and Trademark Office
Address: COMMISSIONER FOR PATENTS
P.O. Box 1450
Alexandria, Virginia 22313-1450
www.uspto.gov

CAMPBELL STEPHENSON LLP
11401 CENTURY OAKS TERRACE
BLDG. H, SUITE 250
AUSTIN, TX 78758

Mail Date: 04/26/2010

Applicant	: Gregory P. Lissy	: DECISION ON REQUEST FOR
Patent Number	: 7664668	: RECALCULATION of PATENT
Issue Date	: 02/16/2010	: TERM ADJUSTMENT IN VIEW
Application No	: 10/737,946	: OF WYETH AND NOTICE OF INTENT TO
Filed	: 12/17/2003	: ISSUE CERTIFICATE OF CORRECTION
		:

The Request for Recalculation is **GRANTED** to the extent indicated.

The patent term adjustment has been determined to be **1581** days. The USPTO will *sua sponte* issue a certificate of correction reflecting the amount of PTA days determined by the recalculation.

Prior to the issuance of the certificate of correction, the USPTO will afford patentee an opportunity to be heard and request reconsideration. Accordingly, patentee has **one month or thirty (30) days**, whichever is longer, to file a request for reconsideration of this patent term adjustment calculation. See 35 U.S.C. 154(b)(3)(B)(ii) and 37 CFR 1.322(a)(4). No extensions of time will be granted under 37 CFR 1.136.

Patentee should use document code PET.OP if electronically filing a request for reconsideration of this patent term adjustment calculation. The patentee must also include the information required by 37 CFR 1.705(b)(2) and the fee required by 37 CFR 1.18(e). If patentee does not file a timely request for reconsideration of this patent term adjustment calculation including the information required by 37 CFR 1.705(b)(2) and the fee required by 37 CFR 1.18(e), the USPTO will issue a certificate of correction reflecting the PTA determination noted above.

Patentee should be aware that in order to preserve the right to review in the United States District Court for the District of Columbia of the USPTO patent term adjustment determination, patentee must ensure that he or she also take the steps required under 35 U.S.C. 154(b)(4)(A) in a timely manner. Nothing in the request for recalculation should be construed as providing an alternative time frame for commencing a civil action under 35 U.S.C. 154(b)(4)(A).

Any questions concerning this decision should be directed to the Office of Patent Legal Administration at 571-272-7702.

UNITED STATES PATENT AND TRADEMARK OFFICE

Commissioner for Patents
United States Patent and Trademark Office
P.O. Box 1450
Alexandria, VA 22313-1450
www.uspto.gov

BUSK OP LAW GROUP, P.C.
1776 YORKTOWN
SUITE 550
HOUSTON, TX 77056

COPY MAILED

NOV 3 0 2006

OFFICE OF PETITIONS

In re Application of :
Jerry Dennis Sacks et al :
Application No. 10/737,952 : DECISION ON PETITION
Filed: December 15, 2003 : TO MAKE SPECIAL UNDER
Attorney Docket No. 1219.03 : 37 CFR 1.102(c)(1)
:

This is a decision on the petition under 37 CFR 1.102(c)(1), filed June 20, 2006, to make the above-identified application special based on applicant's age as set forth in M.P.E.P. § 708.02, Section IV.

The petition is **GRANTED**.

A grantable petition to make an application special under 37 CFR 1.102(c)(1) and MPEP § 708.02, Section IV: Applicant's Age must be accompanied by evidence showing that at least one of the applicants is 65 years of age, or more, such as a birth certificate or a statement by applicant. No fee is required

The instant petition includes a statement from Inventor Jerry Dennis Sacks stating that he is over 65 years of age. Accordingly, the above-identified application has been accorded "special" status.

Telephone inquiries concerning this decision should be directed to Irvin Dingle at 571-272-3210.

All other inquiries concerning either the examination or status of the application should be directed to the Technology Center.

The application is being forwarded to the Technology Center Art Unit 3628 for action on the merits commensurate with this decision.

Irvin Dingle
Petitions Examiner
Office of Petitions

UNITED STATES PATENT AND TRADEMARK OFFICE

Commissioner for Patents
United States Patent and Trademark Office
P.O. Box 1450
Alexandria, VA 22313-1450
www.uspto.gov

BUSKOP LAW GROUP, P.C.
4511 DACOMA STREET
HOUSTON, TX 77092

COPY MAILED

JUL 0 2 2008

OFFICE OF PETITIONS

In re Application of :
Jerry Dennis Sacks et al :
Application No. 10/737,952 : ON PETITION
Filed: December 15, 2003 :
Attorney Docket No. 1219.03 :

This is a decision on the petition under 37 CFR 1.137(b), filed March 20, 2008 to revive the above-identified application.

The petition is **DISMISSED.**

Any request for reconsideration of this decision must be submitted within TWO (2) MONTHS from the mail date of this decision. Extensions of time under 37 CFR 1.136(a) are permitted. The reconsideration request should include a cover letter entitled "**Renewed Petition under 37 CFR 1.137(b)**." This is **not** final agency action within the meaning of 5 U.S.C. § 704.

The above-identified application became abandoned for failure to submit the formal drawings a timely manner in reply to the Notice of Allowance mailed October 19, 2007, which set a statutory period for reply of three (3) months. Accordingly, the above-identified application became abandoned on January 20, 2008.

A grantable petition under 37 CFR 1.137(b) must be accompanied by: (1) the required reply, unless previously filed; (2) the petition fee as set forth in 37 CFR 1.17(m); (3) a statement that the entire delay in filing the required reply from the due date for the reply until the filing of a grantable petition pursuant to 37 CFR 1.137(b) was unintentional; and (4) any terminal disclaimer (and fee as set forth in 37 CFR 1.20(d)) required by 37 CFR 1.137(c). Where there is a question as to whether either the abandonment or the delay in filing a petition under 37 CFR 1.137 was unintentional, the Commissioner may require additional information. See MPEP 711.03(c)(III)(C) and (D). The instant petition lack(s) item(s) (1).

A petition to revive cannot be granted where there is an outstanding requirement. In the instant case, the formal drawings have not been received. A courtesy copy the Notice of Allowance mailed October 19, 2007 is being mailed with this decision. Accordingly, the petition to revive cannot be granted until the formal drawings are received.

The petition submitted March 20, 2008 signature page (page 2) is missing.

Further correspondence with respect to this matter should be addressed as follows:

By mail: Mail Stop PETITION
Commissioner for Patents
Post Office Box 1450
Alexandria, VA 22313-1450

By hand: Customer Service Window
Randolph Building
401 Dulany Street
Alexandria, VA 22314

By facsimile: (571) 273-8300
ATTN: Office of Petitions

Telephone inquiries concerning this decision should be directed to the undersigned at (571) 272-3210.

Irvin Dingle
Petitions Examiner
Office of Petitions

Attachment: A courtesy copy the Notice of Allowance mailed October 19, 2007

FW

UNITED STATES PATENT AND TRADEMARK OFFICE

UNITED STATES DEPARTMENT OF COMMERCE
United States Patent and Trademark Office
Address: COMMISSIONER FOR PATENTS
P.O. Box 1450
Alexandria, Virginia 22313-1450
www.uspto.gov

APPLICATION NO.	FILING DATE	FIRST NAMED INVENTOR	ATTORNEY DOCKET NO.	CONFIRMATION NO.
10/737,952	12/15/2003	Jerry Dennis Sacks	1219.03	8029

29637 7590 10/19/2007
BUSKOP LAW GROUP, P.C.
4511 Dacoma Street
HOUSTON, TX 77092

EXAMINER
ERB, NATHAN

ART UNIT	PAPER NUMBER
3628	

MAIL DATE	DELIVERY MODE
10/19/2007	PAPER

Please find below and/or attached an Office communication concerning this application or proceeding.

The time period for reply, if any, is set in the attached communication.

Notice of Allowability	Application No. 10/737,952	Applicant(s) SACKS ET AL.	
	Examiner Nathan Erb	Art Unit 3628	

-- The MAILING DATE of this communication appears on the cover sheet with the correspondence address--

All claims being allowable, PROSECUTION ON THE MERITS IS (OR REMAINS) CLOSED in this application. If not included herewith (or previously mailed), a Notice of Allowance (PTOL-85) or other appropriate communication will be mailed in due course. **THIS NOTICE OF ALLOWABILITY IS NOT A GRANT OF PATENT RIGHTS.** This application is subject to withdrawal from issue at the initiative of the Office or upon petition by the applicant. See 37 CFR 1.313 and MPEP 1308.

1. ☒ This communication is responsive to *23 March 2007*.

2. ☒ The allowed claim(s) is/are *1-11*.

3. ☐ Acknowledgment is made of a claim for foreign priority under 35 U.S.C. § 119(a)-(d) or (f).
   a) ☐ All b) ☐ Some* c) ☐ None of the:
      1. ☐ Certified copies of the priority documents have been received.
      2. ☐ Certified copies of the priority documents have been received in Application No. _____ .
      3. ☐ Copies of the certified copies of the priority documents have been received in this national stage application from the International Bureau (PCT Rule 17.2(a)).

   * Certified copies not received: _____.

Applicant has THREE MONTHS FROM THE "MAILING DATE" of this communication to file a reply complying with the requirements noted below. Failure to timely comply will result in ABANDONMENT of this application.
THIS THREE-MONTH PERIOD IS NOT EXTENDABLE.

4. ☐ A SUBSTITUTE OATH OR DECLARATION must be submitted. Note the attached EXAMINER'S AMENDMENT or NOTICE OF INFORMAL PATENT APPLICATION (PTO-152) which gives reason(s) why the oath or declaration is deficient.

5. ☒ CORRECTED DRAWINGS (as "replacement sheets") must be submitted.
   (a) ☐ including changes required by the Notice of Draftsperson's Patent Drawing Review (PTO-948) attached
      1) ☐ hereto or 2) ☐ to Paper No./Mail Date _____.
   (b) ☒ including changes required by the attached Examiner's Amendment / Comment or in the Office action of Paper No./Mail Date 20070910.

Identifying indicia such as the application number (see 37 CFR 1.84(c)) should be written on the drawings in the front (not the back) of each sheet. Replacement sheet(s) should be labeled as such in the header according to 37 CFR 1.121(d).

6. ☐ DEPOSIT OF and/or INFORMATION about the deposit of BIOLOGICAL MATERIAL must be submitted. Note the attached Examiner's comment regarding REQUIREMENT FOR THE DEPOSIT OF BIOLOGICAL MATERIAL.

Attachment(s)

1. ☒ Notice of References Cited (PTO-892)
2. ☐ Notice of Draftperson's Patent Drawing Review (PTO-948)
3. ☐ Information Disclosure Statements (PTO/SB/08), Paper No./Mail Date _____
4. ☐ Examiner's Comment Regarding Requirement for Deposit of Biological Material
5. ☐ Notice of Informal Patent Application
6. ☐ Interview Summary (PTO-413), Paper No./Mail Date _____.
7. ☒ Examiner's Amendment/Comment
8. ☒ Examiner's Statement of Reasons for Allowance
9. ☐ Other _____.

SUPPLEMENTAL ALLOWANCE

EXAMINER'S AMENDMENT

An examiner's amendment to the record appears below. Should the changes and/or additions be unacceptable to applicant, an amendment may be filed as provided by 37 CFR 1.312. To ensure consideration of such an amendment, it MUST be submitted no later than the payment of the issue fee.

Authorization for this examiner's amendment was given in a telephone interview with Attorney Wendy Buskop on April 13, 2007.

Claims 1, 5, and 8-10 of the application have been amended as follows:

1. (currently amended) A method for delivery of at least one object on a load wherein each of the at least one objects has a destination location comprising: a. using a mobile computer having a bar code reader, a display, an audio output device, a tactile input device, [[non-lexicon]] text-to-speech ~~conversion~~ software, a voice recognition software, delivery system software, and radio frequency identification (RFID) reader with a user, wherein said mobile computer is adapted for communication between a delivery server and the user, and the delivery server is adapted for communication between the mobile computer and at least one external computer system; b. entering a user code of the user to log the user onto the mobile computer; c. training the voice recognition software by the user; d. providing a list of objects on the load with each respective destination location to the user from the delivery system software; e. transmitting a request from the mobile computer to the delivery server to identify all of the at least one objects on the load and each destination location per object on the load; f. providing a summary list of objects on the load with each corresponding destination location to the user from the delivery

system software using the text-to-speech software to the audio output device of the user from the delivery system software; g. providing a destination locations list for all of the at least one objects on the load from the delivery system software to the display; h. transporting the load with at least one object to a first destination location on the destination locations list; i. advising the delivery system software by the user at the first destination location as to the first destination location using[[: the]] an audio input to speak characters that identify the first destination location and either[[;]]: i. scanning a barcode identifying the first destination location; or [[.]]ii. reading an RFID data to identify the first destination location; j. advising the user using the text-to-speech software by the delivery system to indicate that the first destination location is correct and that at least one object is to be delivered to the first destination location; k. advising the user using the text-to-speech software which of the at least one objects is to be delivered and the quantity of the at least one object [[s]] to be delivered at the first destination location; l. verifying delivery of the at least one object to the delivery system software by providing information to the delivery system software by identifying the at least one object indicated for delivery at the first destination location to the delivery system software by the user using[[:]] the audio input to speak characters that identify the at least one object; and either[[;]]: i. scanning the barcode of the at least one object; or ii. reading the RFID data of the at least one object; m. transporting the load to additional destination locations on the destination locations list and repeating steps (k) through (l) until all of the objects have been transported, off loaded, and delivery verified for each of the destination locations; and n. transferring the information from the step for verifying delivery to the external computer system upon completion of offloading and verifying of at least one object.

5. (currently amended) The method of claim 1, wherein at least one object being delivered is refused and the user identifies the object to the delivery system[[s]] software being refused by: a. speaking the characters on the object being refused into the audio input ~~deviee~~; b. scanning a barcode disposed on the object being refused; c. reading an RFID data disposed on the object being refused; and d. maintaining the object on the load for return to a sender.

8. (currently amended) The method of claim 1, further comprising the step of providing answers to a series of safety questions by the user to the delivery system software regarding a transport vehicle to move the load of the at least one object wherein the answers are from at least one member of the group of questions consisting of: a. are the brakes working?; b. is the horn working?; c. is the steering working?; d. is there any damage to the transport vehicle?; e. is there any leak in the transport vehicle?; f. are the tires inflated and undamaged?; and g. combinations thereof.

9. (currently amended) The method of claim 1, wherein the destination location can be a member of the group consisting of: a warehouse, a terminal, a dock, a manufacturing site, a customer site, [[or]]and combinations thereof.

10. (currently amended) The method of claim 9, wherein the customer site is a member of the group consisting of: a customer warehouse, a customer store, a residence, a customer manufacturing site, and combinations thereof.

Additional Comment Concerning Drawings

New corrected drawings in compliance with 37 CFR 1.121(d) are required in this application because the flowsheets of Figures 1-3 appear to be incomplete due to the absence of text in the boxes of the flowsheets.

Any inquiry concerning this communication or earlier communications from the examiner should be directed to Nathan Erb whose telephone number is (571) 272-7606. The examiner can normally be reached on Mondays through Fridays, 8:30 AM to 5 PM.

If attempts to reach the examiner by telephone are unsuccessful, the examiner's supervisor, John Hayes can be reached on (571) 272-6708. The fax phone number for the organization where this application or proceeding is assigned is 571-273-8300.

Information regarding the status of an application may be obtained from the Patent Application Information Retrieval (PAIR) system. Status information for published applications may be obtained from either Private PAIR or Public PAIR. Status information for unpublished applications is available through Private PAIR only. For more information about the PAIR system, see http://pair-direct.uspto.gov. Should you have questions on access to the Private PAIR system, contact the Electronic Business Center (EBC) at 866-217-9197 (toll-free). If you would like assistance from a USPTO Customer Service Representative or access to the automated information system, call 800-786-9199 (IN USA OR CANADA) or 571-272-1000.

Nathan Erb
Examiner
Art Unit 3628

nhe

Allowable Subject Matter

1. Claims 1-11 are allowed over the prior art of record.

2. The following is an examiner's statement of reasons for allowance:

The closest prior art of record is Rosenbaum et al., U.S. Patent Application Publication No. US 2004/0118907 A1, Groom et al., GB 2 159 495 A, and Anonymous, "Wireless POD for Palm," Fleet Owner, September 2002, p. 70.

Rosenbaum et al. discloses:

- a method for delivery of at least one object on a load wherein each of the at least one objects has a destination location;

- using a mobile computer having a display and delivery system software with a user, wherein said mobile computer is adapted for communication between a delivery server and the user, and the delivery server is adapted for communication between the mobile computer and at least one external computer system;

- a bar code reader;

- providing a list of objects on the load with each respective destination location to the user from the delivery system software;

- providing a destination locations list for all of the at least one objects on the load from the delivery system software to the display;

- transporting the load with at least one object to a first destination location on the destination locations list;

- repeating delivery steps until all objects have been delivered to all destination locations.

Groom et al. discloses:

- a method for delivery;

- using a mobile computer having a display, a tactile input device, and delivery system software with a user;

- uploading a delivery route to the mobile computer from an external computer;

- monitoring a delivery route;

- recording delivery information for downloading to the external computer at the end of the delivery route.

Anonymous discloses:

- a method for delivery of a load which has at least one destination location;

- using a mobile computer having a bar code reader, a display, a tactile input device, and delivery system software with a user, wherein said mobile computer is adapted for communication between a delivery server and the user, and the delivery server is adapted for communication between the mobile computer and at least one external computer system;

- providing a list of each respective destination location to the user from the delivery system software;

- providing a destination locations list for the load from the delivery system software to the display;

- transporting the load to a first destination location on the destination locations list;

- transporting the load to additional destination locations on the destination locations list.

As per claim 1, the closest prior art of record taken either individually or in combination with other prior art of record fails to teach or suggest a delivery system which has ALL of the following features IN COMBINATION:

- both a bar code reader AND an RFID reader; AND

- voice interface with voice recognition, text-to-speech conversion, and voice training; AND

- log-in security protection; AND

- route information with package destination information; AND

- providing a summary list of objects on the load with each corresponding destination location to the user from the delivery system software using the text-to-speech software to the audio output device of the user from the delivery system software; AND

- advising the delivery system software by the user at the first destination location as to the first destination location using an audio input to speak characters that identify the first destination location and either: i. scanning a barcode identifying the first destination location; or ii. reading an RFID data to identify the first destination location; AND

- advising the user using the text-to-speech software by the delivery system to indicate that the first destination location is correct and that at least one object is to be delivered to the first destination location; AND

- advising the user using the text-to-speech software which of the at least one objects is to be delivered and the quantity of the at least one object to be delivered at the first destination location; AND

- verifying delivery of the at least one object to the delivery system software by providing information to the delivery system software by identifying the at least one object indicated for delivery at the first destination location to the delivery system software by the user using the

audio input to speak characters that identify the at least one object; and either: i. scanning the barcode of the at least one object; or ii. reading the RFID data of the at least one object.

While some of the elements/limitations of claim 1 could be found in various separate references of the prior art, the prior art taken as a whole failed to teach the COMBINATION of ALL of the numerous elements/limitations of claim 1.

Any comments considered necessary by applicant must be submitted no later than the payment of the issue fee and, to avoid processing delays, should preferably accompany the issue fee. Such submissions should be clearly labeled "Comments on Statement of Reasons for Allowance."

Any inquiry concerning this communication or earlier communications from the examiner should be directed to Nathan Erb whose telephone number is (571) 272-7606. The examiner can normally be reached on Mondays through Fridays, 8:30 AM to 5 PM.

If attempts to reach the examiner by telephone are unsuccessful, the examiner's supervisor, John Hayes can be reached on (571) 272-6708. The fax phone number for the organization where this application or proceeding is assigned is 571-273-8300.

Information regarding the status of an application may be obtained from the Patent Application Information Retrieval (PAIR) system. Status information for published applications may be obtained from either Private PAIR or Public PAIR. Status information for unpublished applications is available through Private PAIR only. For more information about the PAIR system, see http://pair-direct.uspto.gov. Should you have questions on access to the Private PAIR system, contact the Electronic Business Center (EBC) at 866-217-9197 (toll-free). If you would like assistance from a USPTO Customer Service Representative or access to the automated information system, call 800-786-9199 (IN USA OR CANADA) or 571-272-1000.

Nathan Erb
Examiner
Art Unit 3628

nhe

JOHN W. HAYES
SUPERVISORY PATENT EXAMINER

UNITED STATES PATENT AND TRADEMARK OFFICE

Commissioner for Patents
United States Patent and Trademark Office
P.O. Box 1450
Alexandria, VA 22313-1450
www.uspto.gov

BUSKOP LAW GROUP, P.C.
4511 DACOMA STREET
HOUSTON, TX 77092

COPY MAILED

NOV 0 6 2008

OFFICE OF PETITIONS

In re Application of :
Jerry Dennis Sacks et al :
Application No. 10/737,952 : ON PETITION
Filed: December 15, 2003 :
Attorney Docket No. 1219.03 :

This is a decision on the renewed petition filed August 11, 2008 under 37 CFR 1.137(b), to revive the above-identified application.

The petition is **GRANTED.**

The petition satisfies the conditions for revival pursuant to the provisions of 37 CFR 1.137(b) in that (1) the reply in the form of payment of the formal drawings; (2) the petition fee received on March 20, 2008; and (3) the required statement of unintentional delay have been received.

Telephone inquiries concerning this decision should be directed to the undersigned at (571) 272-3210.

This matter is being referred to the Office of Data Management for further processing.

Irvin Dingle
Petitions Examiner
Office of Petitions

UNITED STATES PATENT AND TRADEMARK OFFICE

Commissioner for Patents
United States Patent and Trademark Office
P.O. Box 1450
Alexandria, VA 22313-1450
www.uspto.gov

KENYON & KENYON LLP
ONE BROADWAY
NEW YORK NY 10004

COPY MAILED

FEB 0 8 2008

OFFICE OF PETITIONS

In re Application of :
Flashner-Barak et al. :
Application No. 10/738,035 : DECISION ON PETITION
Filed: December 16, 2003 : UNDER 37 CFR 1.78(a)(6)
Attorney Docket No. 1662/62203 :

This is a decision on the petition under 37 CFR 1.78(a)(6), filed December 26, 2007, to accept an unintentionally delayed claim under 35 U.S.C. § 119(e) for the benefit of prior-filed Provisional Application No. 60/305,913, filed July 17, 2001.

The petition is **DISMISSED**.

A petition under 37 CFR 1.78(a)(6) is only applicable to those applications filed on or after November 29, 2000. Further, the petition is appropriate only after expiration of the period specified in 37 CFR 1.78(a)(5)(ii) and must be filed during the pendency of the nonprovisional application. In addition, the petition must be accompanied by:

(1) the reference required by 35 U.S.C. § 119(e) and 37 CFR 1.78(a)(5)(i) to the prior-filed application, unless previously submitted;
(2) the surcharge set forth in § 1.17(t); and
(3) a statement that the entire delay between the date the claim was due under 37 CFR 1.78(a)(5)(ii) and the date the claim was filed was unintentional. The Commissioner may require additional information where there is a question whether the delay was unintentional.

The amendment is not acceptable as drafted since it improperly incorporates by reference the prior-filed application. Petitioner's attention is directed to Dart Industries v. Banner, 636 F.2d 684, 207 USPQ 273 (C.A.D.C. 1980), where the court drew a distinction between a permissible 35 U.S.C. § 120 statement and the impermissible introduction of new matter by way of incorporation by reference in a 35 U.S.C. § 120 statement. The court specifically stated:

> Section 120 merely provides a mechanism whereby an application becomes entitled to benefit of the filing date of an earlier application disclosing the same subject matter. Common subject matter must be disclosed, in both applications, either specifically or by an express incorporation-by-reference of prior disclosed subject matter. Nothing in section 120 itself operates to carry forward any disclosure from an earlier application. In re deSeversky, supra at 674, 177 USPQ at 146-147. Section 120 contains no magical disclosure-augmenting powers able to pierce new matter barriers. It cannot,

therefore, "limit" the absolute and express prohibition against new matter contained in section 251.

In order for the incorporation by reference statement to be effective as a proper safeguard against the omission of a portion of a prior application, the incorporation by reference statement must be included in the specification-as-filed, or in an amendment specifically referred to in an oath or declaration executing the application. *See* In re deSeversky, *supra*. *Note also* MPEP 201.06(c).

The instant pending nonprovisional application was filed on December 16, 2003. The prior-filed provisional application, Application No. 60/305,913, was filed on July 17, 2001, which is more than twelve months prior to the filing date of the instant application. It is believed petitioner meant for the intermediate application, Application No. 10/196,766, to claim the benefit of the above-listed provisional application. If this is correct, petitioner should submit a substitute amendment to the specification to reflect the above.

Accordingly, before the petition under 37 CFR 1.78(a)(6) can be granted, a substitute amendment[1] deleting the incorporation by reference statement and correcting the benefit claim to reflect the proper nonprovisional application, along with a renewed petition under 37 CFR 1.78(a)(6), is required.

As authorized, the $1410.00 fee required by 37 CFR 1.78(a)(6)(ii) was charged to petitioner's Deposit Account No. 11-0600.

Further correspondence with respect to this matter should be addressed as follows:

By mail: Mail Stop PETITIONS
Commissioner for Patents
Post Office Box 1450
Alexandria, VA 22313-1450

By hand: Customer Window located at:

U.S. Patent and Trademark Office
Customer Service Window Randolph Building
401 Dulany Street
Alexandria, VA 22314

By fax: (571) 273-8300
ATTN: Office of Petitions

Any questions concerning this matter may be directed to the undersigned at (571) 272-3206.

Liana Walsh
Petitions Examiner
Office of Petitions

[1] *Note* 37 CFR 1.121

UNITED STATES PATENT AND TRADEMARK OFFICE

Commissioner for Patents
United States Patent and Trademark Office
P.O. Box 1450
Alexandria, VA 22313-1450
www.uspto.gov

KENYON & KENYON LLP
ONE BROADWAY
NEW YORK NY 10004

COPY MAILED

MAY 09 2008

In re Application of	:	
Flashner-Barak et al.	:	
Application No. 10/738,035	:	DECISION GRANTING PETITION
Filed: December 16, 2003	:	UNDER 37 CFR 1.78(a)(6)
Attorney Docket No. 1662/62203	:	

This is a decision on the renewed petition under 37 CFR 1.78(a)(6), filed April 9, 2008, to accept an unintentionally delayed claim under 35 U.S.C. § 119(e) for the benefit of prior-filed provisional Application No. 60/305,913, filed July 17, 2001, as set forth in the concurrently filed amendment.

The petition is **GRANTED**.

A petition under 37 CFR 1.78(a)(6) is only applicable to those applications filed on or after November 29, 2000. Further, the petition is appropriate only after expiration of the period specified in 37 CFR 1.78(a)(5)(ii) and must be filed during the pendency of the nonprovisional application. In addition, the petition must be accompanied by:

(1) the reference required by 35 U.S.C. § 119(e) and 37 CFR 1.78(a)(5)(i) to the prior-filed application, unless previously submitted;
(2) the surcharge set forth in § 1.17(t); and
(3) a statement that the entire delay between the date the claim was due under 37 CFR 1.78(a)(5)(ii) and the date the claim was filed was unintentional. The Commissioner may require additional information where there is a question whether the delay was unintentional.

The instant nonprovisional application was filed after November 29, 2000, and the claim herein for the benefit of priority to the prior-filed provisional application is submitted after expiration of the period specified by 37 CFR 1.78(a)(5)(ii). Therefore, this is a proper petition under 37 CFR 1.78(a)(6).

The petition complies with the requirements for a grantable petition under 37 CFR 1.78(a)(6) in that (1) a reference to the above-noted, prior-filed provisional application has been included in an amendment to the first sentence of the specification following the title, as provided by 37 CFR 1.78(a)(5)(iii); (2) the surcharge fee required by 37 CFR 1.17(t) has been submitted; and (3) the petition contains a proper statement of unintentional delay. Accordingly, having found that the instant petition for acceptance of an unintentionally delayed claim for the benefit of priority under 35 U.S.C. § 119(e) to the above-noted, prior-filed provisional application satisfies the conditions of 37 CFR 1.78(a)(6), the petition is granted.

The granting of the petition to accept the delayed benefit claim to the prior-filed application under 37 CFR 1.78(a)(6) should not be construed as meaning that the instant application is entitled to the benefit of the filing date of the prior-filed application. In order for the instant

application to be entitled to the benefit of the prior-filed application, all other requirements under 35 U.S.C. §119(e) and 37 CFR 1.78(a)(4) and (a)(5) must be met. Similarly, the fact that the corrected Filing Receipt accompanying this decision on petition includes the prior-filed application should not be construed as meaning that applicant is entitled to the claim for benefit of priority to the prior-filed application noted thereon. Accordingly, the examiner will, in due course, consider this benefit claim and determine whether the instant application is entitled to the benefit of the earlier filing date.

A corrected Filing Receipt, which includes the priority claim to the prior-filed provisional application, accompanies this decision on petition.

Any inquiries concerning this decision may be directed to the undersigned at (571) 272-3206. Any other inquiries concerning either the examination procedures or status of the application should be directed to the Technology Center.

This matter is being referred to Technology Center AU 1617 for appropriate action on the amendment submitted April 9, 2008, including consideration by the examiner of the claim under 35 U.S.C. §119(e) for the benefit of priority to prior-filed provisional Application No. 60/305,913.

Liana Walsh
Petitions Examiner
Office of Petitions

| **ATTACHMENT**: Corrected Filing Receipt

UNITED STATES PATENT AND TRADEMARK OFFICE

UNITED STATES DEPARTMENT OF COMMERCE
United States Patent and Trademark Office
Address: COMMISSIONER FOR PATENTS
P.O. Box 1450
Alexandria, Virginia 22313-1450
www.uspto.gov

APPLICATION NUMBER	FILING or 371(c) DATE	GRP ART UNIT	FIL FEE REC'D	ATTY.DOCKET.NO	TOT CLAIMS	IND CLAIMS
10/738,035	12/16/2003	1617	1574	1662/62203	32	6

CONFIRMATION NO. 7203

CORRECTED FILING RECEIPT

26646
KENYON & KENYON LLP
ONE BROADWAY
NEW YORK, NY 10004

OC000000029808586

Date Mailed: 05/07/2008

Receipt is acknowledged of this non-provisional patent application. The application will be taken up for examination in due course. Applicant will be notified as to the results of the examination. Any correspondence concerning the application must include the following identification information: the U.S. APPLICATION NUMBER, FILING DATE, NAME OF APPLICANT, and TITLE OF INVENTION. Fees transmitted by check or draft are subject to collection. Please verify the accuracy of the data presented on this receipt. **If an error is noted on this Filing Receipt, please submit a written request for a Filing Receipt Correction. Please provide a copy of this Filing Receipt with the changes noted thereon. If you received a "Notice to File Missing Parts" for this application, please submit any corrections to this Filing Receipt with your reply to the Notice. When the USPTO processes the reply to the Notice, the USPTO will generate another Filing Receipt incorporating the requested corrections**

Applicant(s)

Moshe Flashner-Barak, Petach Tikva, ISRAEL;
E. Itzhak Lerner, Petach Tikva, ISRAEL;
Vered Rosenberger, Jerusalem, ISRAEL;

Power of Attorney: The patent practitioners associated with Customer Number 26646

Domestic Priority data as claimed by applicant

This application is a CIP of 10/196,766 07/17/2002
which claims benefit of 60/305,913 07/17/2001
This application 10/738,035
claims benefit of 60/433,685 12/16/2002
and claims benefit of 60/460,206 04/02/2003

Foreign Applications

If Required, Foreign Filing License Granted: 03/26/2004

The country code and number of your priority application, to be used for filing abroad under the Paris Convention, is **US 10/738,035**

Projected Publication Date: Not Applicable

Non-Publication Request: No

Early Publication Request: No

Title

Method of increasing bioavailability of alendronate or other bis-phosphonate by predose administration of vitamin D derivative

Preliminary Class

514

PROTECTING YOUR INVENTION OUTSIDE THE UNITED STATES

Since the rights granted by a U.S. patent extend only throughout the territory of the United States and have no effect in a foreign country, an inventor who wishes patent protection in another country must apply for a patent in a specific country or in regional patent offices. Applicants may wish to consider the filing of an international application under the Patent Cooperation Treaty (PCT). An international (PCT) application generally has the same effect as a regular national patent application in each PCT-member country. The PCT process **simplifies** the filing of patent applications on the same invention in member countries, but **does not result** in a grant of "an international patent" and does not eliminate the need of applicants to file additional documents and fees in countries where patent protection is desired.

Almost every country has its own patent law, and a person desiring a patent in a particular country must make an application for patent in that country in accordance with its particular laws. Since the laws of many countries differ in various respects from the patent law of the United States, applicants are advised to seek guidance from specific foreign countries to ensure that patent rights are not lost prematurely.

Applicants also are advised that in the case of inventions made in the United States, the Director of the USPTO must issue a license before applicants can apply for a patent in a foreign country. The filing of a U.S. patent application serves as a request for a foreign filing license. The application's filing receipt contains further information and guidance as to the status of applicant's license for foreign filing.

Applicants may wish to consult the USPTO booklet, "General Information Concerning Patents" (specifically, the section entitled "Treaties and Foreign Patents") for more information on timeframes and deadlines for filing foreign patent applications. The guide is available either by contacting the USPTO Contact Center at 800-786-9199, or it can be viewed on the USPTO website at http://www.uspto.gov/web/offices/pac/doc/general/index.html.

For information on preventing theft of your intellectual property (patents, trademarks and copyrights), you may wish to consult the U.S. Government website, http://www.stopfakes.gov. Part of a Department of Commerce initiative, this website includes self-help "toolkits" giving innovators guidance on how to protect intellectual property in specific countries such as China, Korea and Mexico. For questions regarding patent enforcement issues, applicants may call the U.S. Government hotline at 1-866-999-HALT (1-866-999-4158).

LICENSE FOR FOREIGN FILING UNDER

Title 35, United States Code, Section 184

Title 37, Code of Federal Regulations, 5.11 & 5.15

GRANTED

The applicant has been granted a license under 35 U.S.C. 184, if the phrase "IF REQUIRED, FOREIGN FILING LICENSE GRANTED" followed by a date appears on this form. Such licenses are issued in all applications where

the conditions for issuance of a license have been met, regardless of whether or not a license may be required as set forth in 37 CFR 5.15. The scope and limitations of this license are set forth in 37 CFR 5.15(a) unless an earlier license has been issued under 37 CFR 5.15(b). The license is subject to revocation upon written notification. The date indicated is the effective date of the license, unless an earlier license of similar scope has been granted under 37 CFR 5.13 or 5.14.

This license is to be retained by the licensee and may be used at any time on or after the effective date thereof unless it is revoked. This license is automatically transferred to any related applications(s) filed under 37 CFR 1.53(d). This license is not retroactive.

The grant of a license does not in any way lessen the responsibility of a licensee for the security of the subject matter as imposed by any Government contract or the provisions of existing laws relating to espionage and the national security or the export of technical data. Licensees should apprise themselves of current regulations especially with respect to certain countries, of other agencies, particularly the Office of Defense Trade Controls, Department of State (with respect to Arms, Munitions and Implements of War (22 CFR 121-128)); the Bureau of Industry and Security, Department of Commerce (15 CFR parts 730-774); the Office of Foreign AssetsControl, Department of Treasury (31 CFR Parts 500+) and the Department of Energy.

NOT GRANTED

No license under 35 U.S.C. 184 has been granted at this time, if the phrase "IF REQUIRED, FOREIGN FILING LICENSE GRANTED" DOES NOT appear on this form. Applicant may still petition for a license under 37 CFR 5.12, if a license is desired before the expiration of 6 months from the filing date of the application. If 6 months has lapsed from the filing date of this application and the licensee has not received any indication of a secrecy order under 35 U.S.C. 181, the licensee may foreign file the application pursuant to 37 CFR 5.15(b).

UNITED STATES PATENT AND TRADEMARK OFFICE

Commissioner for Patents
United States Patent and Trademark Office
P.O. Box 1450
Alexandria, VA 22313-1450
www.uspto.gov

ORUM & ROTH
53 W. JACKSON BLVD
CHICAGO IL 60604

COPY MAILED

OCT 0 2 2006

OFFICE OF PETITIONS

In re Application of :
Nobuaki Fujita et al. :
Application No. 10/738,060 : DECISION ON PETITION
Filed: December 17, 2003 : TO WITHDRAW
Attorney Docket No. 13713 : FROM RECORD
:

This is a decision on the Request to Withdraw as attorney or agent of record under 37 C.F.R. § 1.36(b), filed July 16, 2006.

The request is **APPROVED**.

A grantable request to withdraw as attorney/agent of record must be signed by every attorney/agent seeking to withdraw or contain a clear indication that one attorney is signing on behalf of another/others. A request to withdraw will not be approved unless at least 30 (thirty) days would remain between the date of approval and the later of the expiration date of a time to file a response or the expiration date of the maximum time period which can be extended under 37 C.F.R. § 1.136(a).

The request was signed by Catherine L. Glemrich attorney/agent of record on behalf of herself.

Catherine L. Glemrich has been withdrawn as attorney or agent of record; all other attorneys remain of record.

All future communications from the Office will continue to be directed to the above-listed address until otherwise properly notified by the applicant.

Telephone inquiries concerning this decision should be directed to Charles Smoot at 571-272-3299.

David Bucci
Petitions Examiner
Office of Petitions

UNITED STATES PATENT AND TRADEMARK OFFICE

Commissioner for Patents
United States Patent and Trademark Office
P.O. Box 1450
Alexandria, VA 22313-1450
www.uspto.gov

TOWNSEND AND TOWNSEND AND CREW, LLP
TWO EMBARCADERO CENTER
EIGHTH FLOOR
SAN FRANCISCO CA 94111-3834

COPY MAILED

SEP 23 2009

OFFICE OF PETITIONS

In re Application of :
Turpin et al. :
Application No. 10/738,062 :
Filed: December 16, 2003 :
Attorney Docket No. 015280-353200US :

DECISION ON PETITION
TO WITHDRAW
FROM RECORD

This is a decision on the Request to Withdraw as attorney or agent of record under 37 C.F.R. § 1.36(b), filed July 27, 2009.

The request is **NOT APPROVED**.

The Office will only accept correspondence address changes to the most current address information provided for the assignee of the entire interest who properly became of record under 37 CFR 3.71, or, if no assignee of the entire interest has properly been made of record, the most current address information provided for the first named inventor.

The Office will not change the correspondence address to that of a new practitioner unless the Request is accompanied by a power of attorney to a new practitioner (e.g., Form PTO/SB/82). This includes address changes to law firms, where no new power of attorney has been filed in the application. If the applicants wish future correspondence to be mailed to a new law firm, a new power of attorney should be submitted in the application and should include the desired change of correspondence address. Accordingly, as the Request to Withdraw specified a law firm as the new correspondence address of record, the request cannot be granted at this time.

All future communications from the Office will be directed to above-listed address until otherwise properly notified by the applicant or a proper change of correspondence address have been submitted.

There is an outstanding Office action mailed July 23, 2009 which requires a reply. Failure to timely do so will result in abandonment of the application.

Telephone inquires concerning this decision should be directed to the undersigned at (571) 272-3206. All other inquires concerning either the examination or status of the application should be directed to the Technology Center.

Liana Walsh
Petitions Examiner
Office of Petitions

UNITED STATES PATENT AND TRADEMARK OFFICE

UNITED STATES DEPARTMENT OF COMMERCE
United States Patent and Trademark Office
Address: COMMISSIONER FOR PATENTS
P.O. Box 1450
Alexandria, Virginia 22313-1450
www.uspto.gov

CANTOR COLBURN LLP
20 Church Street, 22nd Floor
Hartford, CT 06103

Mail Date: 04/21/2010

Applicant	: James A. Turpin	: DECISION ON REQUEST FOR
Patent Number	: 7625917	: RECALCULATION of PATENT
Issue Date	: 12/01/2009	: TERM ADJUSTMENT IN VIEW
Appliction No	: 10/738,062	: OF WYETH AND NOTICE OF INTENT TO
Filed	: 12/16/2003	: ISSUE CERTIFICATE OF CORRECTION
		:

The Request for Recalculation is **GRANTED** to the extent indicated.

The patent term adjustment has been determined to be **1264** days. The USPTO will *sua sponte* issue a certificate of correction reflecting the amount of PTA days determined by the recalculation.

Prior to the issuance of the certificate of correction, the USPTO will afford patentee an opportunity to be heard and request reconsideration. Accordingly, patentee has **one month or thirty (30) days**, whichever is longer, to file a request for reconsideration of this patent term adjustment calculation. See 35 U.S.C. 154(b)(3)(B)(ii) and 37 CFR 1.322(a)(4). No extensions of time will be granted under 37 CFR 1.136.

Patentee should use document code PET.OP if electronically filing a request for reconsideration of this patent term adjustment calculation. The patentee must also include the information required by 37 CFR 1.705(b)(2) and the fee required by 37 CFR 1.18(e). If patentee does not file a timely request for reconsideration of this patent term adjustment calculation including the information required by 37 CFR 1.705(b)(2) and the fee required by 37 CFR 1.18(e), the USPTO will issue a certificate of correction reflecting the PTA determination noted above.

Patentee should be aware that in order to preserve the right to review in the United States District Court for the District of Columbia of the USPTO patent term adjustment determination, patentee must ensure that he or she also take the steps required under 35 U.S.C. 154(b)(4)(A) in a timely manner. Nothing in the request for recalculation should be construed as providing an alternative time frame for commencing a civil action under 35 U.S.C. 154(b)(4)(A).

Any questions concerning this decision should be directed to the Office of Patent Legal Administration at 571-272-7702.

UNITED STATES PATENT AND TRADEMARK OFFICE

COMMISSIONER FOR PATENTS
UNITED STATES PATENT AND TRADEMARK OFFICE
P.O. BOX 1450
ALEXANDRIA, VA 22313-1450
www.uspto.gov

Sughrue Mion, PLLC
2100 Pennsylvania Avenue, N. W.
Suite 800
Washington, DC 20037

COPY MAILED

MAR 15 2005

OFFICE OF PETITIONS

In re Application of :
Toshiaki Kakinami, et al. :
Application No. 10/738,097 : DECISION GRANTING
Filed: December 18, 2003 : PETITION
Attorney Docket No. Q79095 :

This is a decision on the petition filed May 25, 2004.

The petition is **GRANTED**.

The application was filed on December 18, 2003. However, the Office of Initial Patent Examination mailed a "Notice to File Missing Parts of Nonprovisional Application" on March 26, 2004, stating that Figures 20 and 21 appear(s) to have been omitted.

In response, applicant filed the present petition and a copy of the applicant's postcard receipt acknowledging receipt of 18 sheets of drawings on December 18, 2003 in the United States Patent and Trademark Office (USPTO). Additionally, applicants resubmitted 18 sheets of drawings, which include Figures 20 and 21.

MPEP 503 in pertinent part states:

> "A post card receipt which itemizes and properly identifies the papers which are being filed serves as prima facie evidence of receipt in the PTO of all the items listed thereon on the date stamped thereon by the PTO."

Upon review of the record, 18 sheets of drawings, deposited on December 18, 2003, have not been located among the application papers. However, the evidence is convincing that the application papers deposited on December 18, 2003, which were subsequently misplaced in the USPTO. Therefore, the application, including Figures 20 and 21, was complete on filing and will be granted a filing date of December 18, 2003.

Since the Office erred by not according a filing date, the petition fee of $130 will not be charged to petitioner's deposit account.

This application file is being referred to the Office of Initial Patent Examination Division for further **processing with a filing date of December 18, 2003, with an indication on the filing receipt that 18 sheets of drawings, including Figures 20 and 21, were present on filing and using the Figures 20 and 21 supplied with the instant petition.**

Telephone inquiries concerning this matter may be directed to Marianne Jenkins at (571) 272-3223.

Brian Hearn
Senior Petitions Examiner
Office of Petitions
Office of the Deputy Commissioner
for Patent Examination Policy

UNITED STATES PATENT AND TRADEMARK OFFICE

COMMISSIONER FOR PATENTS
UNITED STATES PATENT AND TRADEMARK OFFICE
P.O. BOX 1450
ALEXANDRIA, VA 22313-1450
www.uspto.gov

COPY MAILED

APR 27 2006

OFFICE OF PETITIONS

OWENS-ILLINOIS, INC.
ONE SEAGATE, 25-LDP
TOLEDO, OH 43666

In re Application of
Difrank, et al.
Application No. 10/738,103
Filed: December 17, 2003
Atty. Dkt. No.: 17461 USA

DECISION GRANTING
PETITION UNDER 37 CFR
1.137(f)

This decision is in response to the petition under 37 CFR 1.137(f), filed March 23, 2006.

The petition is hereby **GRANTED**.

Petitioners state that the instant non-provisional application is the subject of an application filed December 6, 2004 in a foreign country, or under a multinational treaty, that requires publication of applications eighteen months after filing. Petitioners further state that petitioners unintentionally failed to notify the Office of this filing within 45 days of the filing of the subject application in a foreign country.

Hence, the application became abandoned pursuant to 35 USC 122(b)(2)(B)(iii) and 37 CFR 1.213(c) for failure to timely notify the Office of the filing of an application in a foreign country, or under a multilateral international agreement that requires publication of applications 18 months after filing.

A grantable petition under 37 CFR 1.137(f) must be accompanied by: (1) the reply; (2) the petition fee; (3) a statement that the entire delay in filing the required reply from the due date of the reply until the filing of a grantable petition was unintentional; and (4) any terminal disclaimer (and fee as set forth in § 1.20(d)) required pursuant to 37 CFR 1.137(d).

The instant petition has been reviewed and found to be in compliance with the provisions of 37 CFR 1.137(f). Accordingly, the failure to timely notify the Office of a foreign or international filing within 45 days after the date of filing of such foreign or international application as provided by 35 USC

122(b)(2)(B)(iii) and 37 CFR 1.213(c) is accepted as having been unintentionally delayed.

Enclosed please find a Notice regarding rescission.

This application is being forwarded to Technology Center 1700 for further processing.

Telephone inquiries related to this decision may be directed to the undersigned at (571) 272-3205.

Alesia M. Brown
Petitions Attorney
Office of Petitions

Enclosures: Notice Regarding Rescission
Filing Receipt

SPE RESPONSE FOR CERTIFICATE OF CORRECTION

Paper No.: X

DATE : September 27,2007

TO SPE OF : ART UNIT 2117

SUBJECT : Request for Certificate of Correction for Appl. No.: 10/738,118 Patent No.: 7251758 B2

A response is requested with respect to a request for a certificate of correction.

With respect to the change(s) requested to correct Office and/or Applicant's errors, should the patent read as shown in the certificate of correction attached herewith or the COCIN document(s), in IFW images for the above-identified patented application? No new matter should be introduced, nor should the scope or meaning of the claims be changed.

If the response is for an IFW, within 7 days, please complete and forward the response to the employee (named below) via scanning into application images, using document code **COCX**.

DO NOT SENT TO ATTORNEY

If the response is for a paper file wrapper, please complete the response and forward the response with the paper file wrapper, to the employee (named below), within 7 days, to:

Certificates of Correction Branch (CofC)
South Tower - 9A22
Palm Location 7580

LAMONTE NEWSOME
Certificates of Correction Branch
703-308-9390 ext. 112

Thank You For Your Assistance

The request for issuing the above-identified correction(s) is hereby:
Note your decision on the appropriate box.

☒ **Approved**	**All** changes apply.
☐ **Approved in Part**	Specify below which changes **do not** apply.
☐ **Denied**	State the reasons for denial below.

Comments: _____

JACQUES LOUIS-JACQUES
SUPERVISORY PATENT EXAMINER
TECHNOLOGY CENTER 2100

SPE 2117 **Art Unit**

IN THE UNITED STATES PATENT AND TRADEMARK OFFICE

Patentee:	Stocken, *et al.*	Docket No.:	QIM 2002 P 50732 US
Patent No.:	7,251,758 B2	Issue Date:	July 31, 2007
Serial No.:	10/738,118	Filed:	December 18, 2003

For: Semiconductor Device Testing Apparatus, System, and Method for Testing the Contacting with Semiconductor Devices Positioned One Upon the Other

Certificate of Corrections Branch
Commissioner for Patents
P.O. Box 1450
Alexandria, VA 22313-1450

REQUEST FOR ISSUANCE OF CERTIFICATE OF CORRECTION PURSUANT TO 35 U.S.C. § 255 AND 37 C.F.R. § 1.323

Dear Sir:

Upon review of the above-identified issued patent, Patentee notes errors in the claims that should be corrected as shown on the attached Certificate of Correction.

The mistakes noted on the attached Certificate of Correction were not incurred through the fault of the Patent and Trademark Office. Accordingly, please charge the required fee of $100 for this Request for Certificate of Correction and any other required fees to Deposit Account 50-1065.

Patentee respectfully solicits the issuance of the requested Certificate of Correction.

Respectfully submitted,

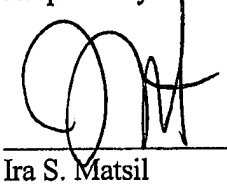

8/22/07
Date

Ira S. Matsil
Attorney for Applicant
Reg. No. 35,272

SLATER & MATSIL, L.L.P.
17950 Preston Rd., Suite 1000
Dallas, TX 75252
(972) 732-1001 (phone)
(972) 732-9218 (fax)

PTO/SB/44 (04-05)
Approved for use through 04/30/2007. OMB 0651-0033
U.S. Patent and Trademark Office; U.S. DEPARTMENT OF COMMERCE
Under the Paperwork Reduction Act of 1995, no persons are required to respond to a collection of information unless it displays a valid OMB control number.
(Also Form PTO-1050)

UNITED STATES PATENT AND TRADEMARK OFFICE
CERTIFICATE OF CORRECTION

PATENT NO. : 7,251,758 B2
APPLICATION NO. : 10/738,118
ISSUE DATE : July 31, 2007
INVENTOR(S) : Christian Stocken, Manfred Dobler

It is certified that an error appears or errors appear in the above-identified patent and that said Letters Patent is hereby corrected as shown below:

Column 11, line 16; delete "value said"; and" insert –value at said at least one pin of said--

MAILING ADDRESS OF SENDER(Please do not use customer number below):

Slater & Matsil, L.L.P.
17950 Preston Road, Suite 1000
Dallas, Texas 75252

This collection of information is required by 37 CFR 1.322, 1.323, and 1.324. The information is required to obtain or retain a benefit by the public which is to file (and by the USPTO to process) an application. Confidentiality is governed by 35 U.S.C. 122 and 37 CFR 1.14. This collection is estimated to take 1.0 hour to complete, including gathering, preparing, and submitting the completed application for to the USPTO. Time will vary depending upon the individual case. Any comments on the amount of time you require to complete this form and/or suggestions for reducing this burden, should be sent to the Chief Information Officer, U.S. Patent and Trademark Office, U.S. Department of Commerce, P.O. Box 1450, Alexandria, VA 22313-1450. DO NOT SEND FEES OR COMPLETED FORMS TO THIS ADDRESS. **SEND TO: Attention Certificate of Corrections Branch, Commissioner for Patents, P.O. Box 1450, Alexandria, VA 22313-1450.**

If you need assistance in completing the form, call 1-800-PTO-9199 and select option 2.

SPE RESPONSE FOR CERTIFICATE OF CORRECTION

Paper No.: _____

DATE : Nov. 11, 2008

TO SPE OF : ART UNIT 1644
SUBJECT : Request for Certificate of Correction for Appl. No.:/10/738120/7282568

Please respond to this request for a certificate of correction within 7 days.

FOR IFW FILES:

Please review the requested changes/corrections as shown in the **COCIN** document(s) in the IFW application image. No new matter should be introduced, nor should the scope or meaning of the claims be changed.

Please complete the response (see below) and forward the completed response to scanning using document code **COCX**.

FOR PAPER FILES:

Please review the requested changes/corrections as shown in the attached certificate of correction. Please complete this form (see below) and forward it with the file to:

Certificates of Correction Branch (CofC)
South Tower - 9A22
Palm Location 7580

Magdalene Talley
Certificates of Correction Branch
703-308-9390 ext. 116

Thank You For Your Assistance

The request for issuing the above-identified correction(s) is hereby:
Note your decision on the appropriate box.

- ☑ **Approved** — **All** changes apply.
- ☐ **Approved in Part** — Specify below which changes **do not** apply.
- ☐ **Denied** — State the reasons for denial below.

Comments: _____

RAM R. SHUKLA, PH.D.
SUPERVISORY PATENT EXAMINER
1644

UNITED STATES PATENT AND TRADEMARK OFFICE

Commissioner for Patents
United States Patent and Trademark Office
P.O. Box 1450
Alexandria, VA 22313-1450
www.uspto.gov

SALIWANCHIK LLOYD & SALIWANCHIK
A PROFESSIONAL ASSOCIATION
PO Box 142950
GAINESVILLE FL 32614

MAILED

JUL 07 2010

OFFICE OF PETITIONS

In re Patent No. 7,642,341
Issued: January 5, 2010
Application No. 10/738,123
Filed: December 18, 2003
Dkt. No.: SER.108

: DECISION ON APPLICATION FOR
: PATENT TERM ADJUSTMENT and
: NOTICE OF INTENT TO ISSUE
: CERTIFICATE OF CORRECTION
:

This is a decision on the "REQUEST FOR CORRECTION OF PATENT TERM ADJUSTMENT," filed on February 11, 2010, which is being treated as a petition under 37 CFR 1.705(d) requesting that the patent term adjustment indicated on the above-identified patent be corrected to indicate that the term of the above-identified patent is extended or adjusted by 837 days.

The petition to correct the patent term adjustment indicated on the above-identified patent is **GRANTED to the extent indicated herein**.

The correct period of adjustment under 37 CFR 1.702(b) is 505 days. As the period from the filing date of the request for continued examination (RCE) to the issue date of the patent is not included in the "B" delay period, the over three year period begins on December 19, 2006 and ends on May 6, 2008, the day before the RCE was filed. See, 35 U.S.C. 154(b)(1)(B)(i). Thus, the over 3 year period is 505 days

The overall adjustment under 37 CFR 1.702 is properly reduced 258 days for applicant delays under 37 CFR 1.704

However, the "B" delay under 37 CFR 1.702(b) may not include the number of days in the period beginning on the date on which a Notice of Appeal was filed and ending on the date of mailing of the last decision by the Board of Patent Appeals and Interferences or by a Federal court in an appeal under 35 U.S.C. 141 or a civil action under 35 U.S.C. 145, or on the date of mailing of either an action under 35 U.S.C. 132, or a notice of allowance under 35 U.S.C. 151, whichever occurs first, if the appeal did not result in a decision by the Board of Patent Appeals and Interferences. See, 37 CFR 1.703(b)(4).

Accordingly, as a Notice of Appeal was filed March 7, 2008 and an RCE was filed on May 7, 2008, the adjustment is properly reduced an additional 61 days. The period commenced March 7, 2008, the date that the Notice of Appeal was filed, and ended May 6, 2008, the day before the date that the RCE was filed.

In view thereof, the patent is entitled to an overall adjustment of 765 days (579 days under 37 CFR 1.702(a) + 505 days under 37 CFR 1.702(b) – zero overlapping days – 61 days pursuant to 37 CFR 1.703(b)(4) – 258 days of applicant delay).

The Office will *sua sponte* issue a certificate of correction. Pursuant to 37 CFR 1.322, the Office will not issue a certificate of correction without first providing assignee or patentee an opportunity to be heard. Accordingly, patentees are given **one (1) month or thirty (30) days**, whichever is longer, from the mail date of this decision to respond. No extensions of time will be granted under § 1.136. See 37 CFR 1.323(a)(4).

The Office acknowledges the previous submission of the $200.00 fee set forth in 37 CFR 1.18(e). No additional fees are required.

The application is being forwarded to the Certificates of Corrections Branch for issuance of a certificate of correction. The Office will issue a certificate of correction indicating that the term of the above-identified patent is extended or adjusted by 765 days.

Telephone inquiries specific to this matter should be directed to the undersigned at (571) 272-3205.

/ALESIA M. BROWN/

Alesia M. Brown
Senior Petitions Attorney
Office of Petitions

Enclosure: Copy of DRAFT Certificate of Correction

UNITED STATES PATENT AND TRADEMARK OFFICE

CERTIFICATE OF CORRECTION

PATENT : 7,642,341

DATED : **January 5, 2010** **DRAFT**

INVENTOR(S) : Imhof, et al.

It is certified that error appears in the above-identified patent and that said Letters Patent is hereby corrected as shown below:

On the cover page,

[*] Notice: Subject to any disclaimer, the term of this patent is extended or adjusted under 35 USC 154(b) by 321 days

Delete the phrase "by 321 days" and insert – by 765 days--

UNITED STATES PATENT AND TRADEMARK OFFICE

Commissioner for Patents
United States Patent and Trademark Office
P.O. Box 1450
Alexandria, VA 22313-1450
www.uspto.gov

NUTTER MCCLENNEN & FISH LLP
WORLD TRADE CENTER WEST
155 SEAPORT BOULEVARD
BOSTON MA 02210-2604

MAILED

MAR 12 2009

OFFICE OF PETITIONS

In re Application of	:	
David Greg Anderson et al	:	
Application No. 10/738,130	:	DECISION GRANTING PETITION
Filed: December 16, 2003	:	UNDER 37 CFR 1.313(c)(2)
Attorney Docket No. 101896-0209	:	

This is a decision on the petition under 37 CFR 1.313(c)(2), filed March 11, 2009, to withdraw the above-identified application from issue after payment of the issue fee.

The petition is **GRANTED**.

The above-identified application is withdrawn from issue for consideration of a submission under 37 CFR 1.114 (request for continued examination). *See* 37 CFR 1.313(c)(2).

Petitioner is advised that the issue fee paid on February 4, 2009 cannot be refunded. If, however, this application is again allowed, petitioner may request that it be applied towards the issue fee required by the new Notice of Allowance.[1]

Telephone inquiries should be directed to the undersigned at (571) 272-3208.

This application is being referred to Technology Center AU 3775 for processing of the request for continued examination under 37 CFR 1.114 and for consideration of the concurrently filed IDS.

/Karen Creasy/
Karen Creasy
Petitions Examiner
Office of Petitions

---

[1] *The request to apply the issue fee to the new Notice may be satisfied by completing and returning the new Part B – Fee(s) Transmittal Form (along with any balance due at the time of submission). Petitioner is advised that the Issue Fee Transmittal Form must be completed and timely submitted to avoid abandonment of the application.*

UNITED STATES PATENT AND TRADEMARK OFFICE

Commissioner for Patents
United States Patent and Trademark Office
P.O. Box 1450
Alexandria, VA 22313-1450
www.uspto.gov

CROWELL & MORING
INTELLECTUAL PROPERTY GROUP
P.O. BOX 14300
WASHINGTON DC 20044-4300

COPY MAILED

FEB 0 6 2006

OFFICE OF PETITIONS

In re Application of :
Shinichi Fujino et al :
Application No. 10/738,136 : ON PETITION
Filed: December 18, 2003 :
Attorney Docket No. 056207.53074US :

This is a decision on the petition, filed January 27, 2006, under 37 CFR 1.313(c)(2) to withdraw the above-identified application from issue after payment of the issue fee.

The petition is **GRANTED.**

The above-identified application is withdrawn from issue for consideration of a submission under 37 CFR 1.114 (request for continued examination). See 37 CFR 1.313(c)(2).

Petitioner is advised that the issue fee paid on January 20, 2006, in the above-identified application cannot be refunded. If, however, the above-identified application is again allowed, petitioner may request that it be applied towards the issue fee required by the new Notice of Allowance.[1]

Telephone inquiries should be directed to the undersigned at (571) 272-3208.

The examiner of Technology Center AU 2837 will consider the request for continued examination under 37 CFR 1.114.

Karen Creasy

Karen Creasy
Petitions Examiner
Office of Petitions
Office of the Deputy Commissioner
for Patent Examination Policy

---

[1] The request to apply the issue fee to the new Notice may be satisfied by completing and returning the new Issue Fee Transmittal Form PTOL-85(b), which includes the following language thereon: "Commissioner for Patents is requested to apply the Issue Fee and Publication Fee (if any) or re-apply any previously paid issue fee to the application identified above." Petitioner is advised that, whether a fee is indicated as being due or not, the Issue Fee Transmittal Form **must** be completed and timely submitted to avoid abandonment. Note the language in bold text on the first page of the Notice of Allowance and Fee(s) Due (PTOL-85).

UNITED STATES PATENT AND TRADEMARK OFFICE

Commissioner for Patents
United States Patent and Trademark Office
P.O. Box 1450
Alexandria, VA 22313-1450
www.uspto.gov

CHRISTIE, PARKER & HALE, LLP
PO BOX 7068
PASADENA CA 91109-7068

COPY MAILED

JUL 0 6 2005

OFFICE OF PETITIONS

In re Application of	:	
Marrocco et al.	:	
Application No. 10/738,143	:	DECISION REFUSING STATUS
Filed: December 16, 2003	:	UNDER 37 CFR 1.47(a)
Attorney Docket No. 47337/WPC/M237	:	
Title: POLYMER MATRIX ELECTROLUMINCESCENT MATERIALS AND DEVICES	:	

This is in response to the petition filed May 5, 2005, under 37 CFR. §1.47(a).

The petition under 37 CFR. §1.47(a) is **DISMISSED**.

Rule 47 applicant is given TWO MONTHS from the mailing date of this decision to reply, correcting the below-noted deficiencies. Any reply should be entitled "Request for Reconsideration of Petition Under 37 CFR. §1.47(a)," and should only address the deficiencies noted below, except that the reply may include an oath or declaration executed by the non-signing inventor. **Failure to respond will result in abandonment of the application**. Any extensions of time will be governed by 37 CFR. §1.136(a).

The above-identified application was filed on December 16, 2003, without an executed oath or declaration. Accordingly, on March 26, 2004, applicant was mailed a "Notice to File Missing Parts of Nonprovisional Application - Filing Date Granted," requiring for the purposes of this decision an executed oath or declaration in compliance with §1.63, and a surcharge for its late filing. This Notice set an extendable two-month period for reply of May 26, 2004. A second Notice of Missing Parts was mailed on October 8, 2004 setting an extendable two-month period for reply of December 8, 2004

In reply, applicant filed a petition, the surcharge for late filing of the declaration, and a partially executed declaration. To make timely a five month extension of time was obtained. The current petition fee is $200.00. Pursuant to petitioner's request the $70.00 balance will be charged to deposit account no. 03-1728.

A grantable petition under 37 CFR. §1.47(a) requires: (1) proof that the non-signing inventor cannot be reached or refuses to sign the oath or declaration after having been presented with the application papers (specification, claims and drawings); (2) an acceptable oath or declaration in compliance with 35 U.S.C. §§115 and 116; (3) the

petition fee; and (4) a statement of the last known address of the non-signing inventor.

The instant petition does not satisfy requirements (2).

As to item (2), the declaration submitted does not comply with 37 CFR 1.64(b). Where an oath or declaration is being signed on behalf of a deceased inventor, the oath or declaration shall state the person is a legal representative and provide the name, citizenship, residence and mailing address of the legal representative.

Further correspondence with respect to this matter should be addressed as follows:

By mail:	Mail Stop Petition Commissioner for Patents P.O. Box 1450 Alexandria, VA 22313-1450
By facsimile:	(703) 872-9306
By delivery service: (FedEx, UPS, DHL, etc.)	U.S. Patent and Trademark Office Customer Service Window, Randolph Building 401 Dulany Street Alexandria, VA 22314

Telephone inquiries related to this decision may be directed to the undersigned at (571) 272-3215.

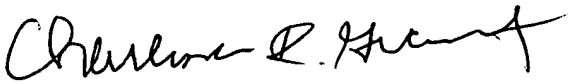

Charlema R. Grant
Petitions Attorney
Office of Petitions

UNITED STATES PATENT AND TRADEMARK OFFICE

Commissioner for Patents
United States Patent and Trademark Office
P.O. Box 1450
Alexandria, VA 22313-1450
www.uspto.gov

CHRISTIE, PARKER & HALE, LLP
PO BOX 7068
PASADENA CA 91109-7068

COPY MAILED

AUG 19 2005

OFFICE OF PETITIONS

In re Application of
Matthew Marrocco, Farshad Motamedi, Feras Bashir Abdelrazzaq and Bashir Twfiq Abdelrazzaq
Application No. 10/738,143
Filed: December 16, 2003
Attorney Docket Number: 47337/WPC/M237
Title of Invention: Polymer Matrix Electroluminescent Materials and Devices

DECISION GRANTING STATUS UNDER 37 CFR 1.47(a)

This is in response to the renewed petition under 37 CFR 1.47(a), filed July 25, 2005.

The petition is GRANTED.

Petitioner has shown the non-signing legal representative of deceased inventor Abdelrazzaq has refused to join in the filing of the above-identified application after having been presented with the application papers. The petition attest a copy of the application papers was sent to legal representative last known address. The legal representative's failure to respond to the application mailing sufficiently establishes that he refuses to execute the application papers.

The above-identified application and papers have been reviewed and found in compliance with 37 CFR 1.47(a). This application is hereby accorded Rule 1.47(a) status.

As provided in Rule 1.47(c), this Office will forward notice of this application's filing to the non-signing inventor at the address given in the petition. Notice of the filing of this application will also be published in the Official Gazette.

This application is being forwarded to the Office of Initial Patent Examination for further processing.

Telephone inquiries related to this decision may be directed to the undersigned at (571) 272-3215.

Charlema R. Grant
Petitions Attorney
Office of Petitions

UNITED STATES PATENT AND TRADEMARK OFFICE

Commissioner for Patents
United States Patent and Trademark Office
P.O. Box 1450
Alexandria, VA 22313-1450
www.uspto.gov

Bashir Twfiq Abdelrazzaq
Wahadap
Sahep Ben Abad
Amman, Jordan
Airmail

In re Application of
Matthew Marrocco, Farshad Motamedi, Feras Bashir Abdelrazzaq and Bashir Twfiq Abdelrazzaq
Application No. 10/738,143
Filed: December 16, 2003
Attorney Docket Number: 47337/WPC/M237
Title of Invention: Polymer Matrix Electroluminescent Materials and Devices

: LETTER

COPY MAILED

AUG 19 2005

OFFICE OF PETITIONS

Dear Mr. Abdelrazzaq :

You are named as legal representative to a joint inventor in the above-identified United States patent application filed under the provisions of 35 U.S.C. § 116 (United States Code) and 37 C.F.R. § 1.47(a), Rules of Practice in Patent Cases. Should a patent be granted on the application you will be designated therein as a joint inventor.

As a named inventor you are entitled to inspect any paper in the file wrapper of the application, order copies of all or any part thereof (at a prepaid cost as per 37 C.F.R. § 1.19) or make your position of record in the application. Alternatively, you may arrange to do any of the preceding through a registered patent attorney or agent presenting written authorization from you. If you care to join the application, counsel of record (see below) would presumably assist you. Joining in the application would entail the filing of an appropriate oath or declaration by you pursuant to 37 C.F.R. § 1.63.

Telephone inquiries regarding this communication should be directed to Petitions Attorney Charlema R. Grant at (571) 272-3215. Requests for information regarding your application should be directed to the File Information Unit at (703) 308-2733. Information regarding how to pay for and order a copy of the application, or a specific paper in the application, should be directed to Certification Division at (703) 308-9726 or 1-800-972-6382 (outside the Washington D.C. area).

Charlema R. Grant
Petitions Attorney
Office of Petitions

CHRISTIE, PARKER & HALE, LLP
PO BOX 7068
PASADENA CA 91109-7068
ATTN: WILLIAM P. CHRISTIE

UNITED STATES PATENT AND TRADEMARK OFFICE

Commissioner for Patents
United States Patent and Trademark Office
P.O. Box 1450
Alexandria, VA 22313-1450
www.uspto.gov

NOVARTIS
CORPORATE INTELLECTUAL PROPERTY
ONE HEALTH PLAZA 101/2
EAST HANOVER NJ 07936-1080

MAILED

JUL 15 2010

OFFICE OF PETITIONS

In re Application of :
Jan-Erik Lofroth, et al. :
Application No. 10/738,196 : ON PETITION
Filed: December 17, 2003 :
,Attorney Docket No. 0072078-000004 :

This is a decision on the petition under the unintentional provisions of 37 CFR 1.137(b), filed June 8, 2010, to revive the above-identified application.

The petition is **GRANTED**.

The application became abandoned for failure to timely reply within the meaning of 37 CFR 1.113 to the final Office action, mailed April 15, 2009, which set a shortened statutory period for reply of three (3) months. No extensions of time under the provisions of 37 CFR 1.136(a) were obtained. Accordingly, the application became abandoned on July 16, 2009. The Notice of Abandonment was mailed November 24, 2009.

The petition satisfies the requirements of 37 CFR 1.137(b) in that petitioner has supplied (1) the reply in the form of a continuing application under 37 CFR 1.53(b); (2) the petition fee of Jul; and (3) a proper statement of unintentional delay.

It is not apparent whether the person signing the statement of unintentional delay was in a position to have firsthand or direct knowledge of the facts and circumstances of the delay at issue. Nevertheless, such statement is being treated as having been made as the result of a reasonable inquiry into the facts and circumstances of such delay. See 37 CFR 10.18(b) and Changes to Patent Practice and Procedure; Final Rule Notice, 62 Fed. Reg. 53131, 53178 (October 10, 1997), 1203 Off. Gaz. Pat. Office 63, 103 (October 21, 1997). In the event that such an inquiry has not been made, petitioner must make such an inquiry. If such inquiry results in the discovery that it is not correct that the entire delay in filing the required reply from the due date for the reply until the filing of a grantable petition pursuant to 37 CFR 1.137(b) was unintentional, petitioner must notify the Office.

This application is being revived solely for purposes of continuity. As continuity has been established by this decision, the application is again abandoned in favor of continuing application No. 12/795,774.

Telephone inquiries concerning this decision should be directed to Terri Johnson at (571) 272-2991.

Terri Johnson
Petitions Examiner
Office of Petitions

UNITED STATES PATENT AND TRADEMARK OFFICE

Commissioner for Patents
United States Patent and Trademark Office
P.O. Box 1450
Alexandria, VA 22313-1450
www.uspto.gov

NIXON & VANDERHYE, PC
901 NORTH GLEBE ROAD, 11TH FLOOR
ARLINGTON VA 22203

COPY MAILED

MAY 2 3 2008

OFFICE OF PETITIONS

In re Application of :
Wesseling :
Application No. 10/738,214 : ON PETITION
Filed: December 18, 2003 :
Attorney Docket No. 1579-877 :
For: METHOD OF IDENTIFYING
THERAPEUTIC AGENTS

This is a decision on the petition under 37 CFR 1.181, filed January 15, 2008, requesting that the Office withdraw the holding of abandonment of the above-identified application.

The petition under 37 CFR 1.181 is **GRANTED**.

This application was held abandoned for failure to respond in a timely manner to the non-final Office action, mailed June 25, 2007, which set forth an extendable three (3) month period for reply. The Office contended that this application became abandoned on September 26, 2007 for failure to reply to the June 25, 2007 non-final Office action. A Notice of Abandonment was mailed on January 8, 2008.

Petitioner requests withdrawal of the holding of abandonment based on the assertion that a request for a three month extension of time and an amendment, *inter alia*, were timely received in the Office on December 26, 2007. The undersigned finds this argument completely convincing, as these documents are present in the application file and Office financial records shows that the required three month extension of time fee was charged on December 27, 2007. The mailroom date for the payment was December 26, 2007. Therefore, the three month extension of time and amendment were timely filed.

The petition under 37 CFR 1.181 is **granted**, the holding of abandonment is withdrawn, and the January 8, 2008 Notice of Abandonment is **vacated**. No petition fee has been or will be charged in connection with this matter.

Accordingly, the application file will be forwarded to Technology Center A.U. 1647 for consideration of the timely reply filed on December 26, 2007.

Telephone inquiries pertaining to this matter may be directed to the undersigned at (571) 272-3230.

Shirene Willis Brantley

Shirene Willis Brantley
Senior Petitions Attorney
Office of Petitions
Office of the Deputy Commissioner
for Patent Examination Policy

UNITED STATES PATENT AND TRADEMARK OFFICE

Commissioner for Patents
United States Patent and Trademark Office
P.O. Box 1450
Alexandria, VA 22313-1450
www.uspto.gov

BELL BOYD & LLOYD
PO BOX 1135
CHICAGO, IL 60690-1135

COPY MAILED
APR 19 2006
OFFICE OF PETITIONS

In re Application of
Mark Siegel
Application No. 10/738,282
Filed: December 16, 2003
Attorney Docket No. 115438-036

DECISION ON PETITION
TO MAKE SPECIAL UNDER
37 CFR 1.102(d)

This is a decision on the petition under 37 CFR § 1.102(d), filed February 2, 2006, to make the above-identified application special based on actual infringement as set forth in M.P.E.P. § 708.02, Section II.

The petition is **GRANTED**.

A grantable petition to make an application special under 37 CFR § 1.102(d) and MPEP § 708.02, Section II: Infringement, must be accompanied by the required fee pursuant to 37 CFR 1.17(h) and a statement by the applicant, assignee, or attorney/agent registered to practice before the Office alleging:

(A) That there is an infringing device or product actually on the market or method in use;

(B) That a rigid comparison of the alleged infringing device, product, or method with the claims of the application has been made, and that, in his or her opinion, some of the claims are unquestionably infringed; and

(c) That he or she has made or caused to be made a careful and thorough search of the prior art or has a good knowledge of the pertinent prior art.

Applicant must provide one copy of each of the references deemed most closely related to the subject matter encompassed by the claims if said references are not already of record.

The petition complies with all the above stated requirements. Accordingly, the above-identified application has been accorded "special" status.

Telephone inquiries concerning this decision should be directed to Wan Laymon at 571-272-3220.

All other inquiries concerning either the examination or status of the application should be directed to the Technology Center.

This matter is being referred to Technology Center AU 3713 for action on the merits commensurate with decision.

Denise Pothier
Petitions Examiner
Office of Petitions

UNITED STATES PATENT AND TRADEMARK OFFICE

UNDER SECRETARY OF COMMERCE FOR INTELLECTUAL PROPERTY AND
DIRECTOR OF THE UNITED STATES PATENT AND TRADEMARK OFFICE
WASHINGTON, DC 20231
www.uspto.gov

Julie H. Richardson
MYERS BIGEL SIBLEY & SAJOVEC
P.O. Box 37428
Raleigh, NC 27627

In re:	Samuel D. Griggs, et al	:	DECISION ON REQUEST
Serial No.:	10/738,315	:	UNDER 37 CFR 5.25
Filing date:	01 April 2004		
Docket No:	9389-10		

Title: NETTING PRODUCT CHUTE WITH RIBBED FLOOR MANUAL AND/OR AUTOMATIC PACKAGING OPERATIONS

In view of the communication(s) filed 01 April 2004 it has been determined that a retroactive license for foreign filing under 35 U.S.C. 184 be granted with respect to the filings listed below. The petition complies with 37 C.F.R. 5.25 in that there is an adequate showing that the subject matter in question was not under secrecy order, that the license was diligently sought after discovery of the proscribed foreign filing, and that the material was filed abroad without the required license under 37 C.F.R. 5.11 first having been obtained through error and without deceptive intent.

Country	Date
Canada	31 December 2003
Mexico	12 January 2004

Approved:

Andrea M. Valenti

Andrea M. Valenti
Patent Examiner
Group 3643
(703) 305-3010

09 June 2004

UNITED STATES PATENT AND TRADEMARK OFFICE

Commissioner for Patents
United States Patent and Trademark Office
P.O. Box 1450
Alexandria, VA 22313-1450
www.uspto.gov

MENG-TSUEY, PAN
P.O. BOX 1-252
SANCHUNG CITY,
TAIWAN

COPY MAILED

JUN 3 0 2005

OFFICE OF PETITIONS

In re Application of	:	
A-Gi Chou	:	
Application No. 10/738,348	:	DECISION GRANTING PETITION
Filed: December 15, 2003	:	UNDER 37 CFR 1.137(b)
Attorney Docket No. None	:	

This is a decision on the petition filed March 30, 2005, which is being treated as a petition under 37 CFR 1.137(b), to revive the above-identified application.

The petition is **GRANTED**.

37 CFR 1.137(b)(3) requires a statement that the entire delay in filing the required reply from the due date for the reply until the filing of a grantable petition pursuant to 37 CFR 1.137(b) was unintentional. Since the statement contained in the instant petition varies from the language required by 37 CFR 1.137(b)(3), the statement contained in the instant petition is being construed as the statement required by 37 CFR 1.137(b)(3) and petitioner must notify the Office if this is **not** a correct interpretation of the statement contained in the instant petition.

The petition satisfies the conditions for revival pursuant to the provisions of 37 CFR 1.137(b) in that (1) the reply in the form of the required fees; (2) the petition fee; and (3) the required statement of unintentional delay have been received. Accordingly, the reply to the Notice To File Missing Parts Of Nonprovisional Application of March 29, 2004, is accepted as having been unintentionally delayed.

Telephone inquiries concerning this decision should be directed to the undersigned at (571) 272-3208.

This matter is being referred to the Office of Initial Patent Examination.

Karen Creasy

Karen Creasy
Petitions Examiner
Office of Petitions
Office of the Deputy Commissioner
for Patent Examination Policy

PTO/SB/66 (03-09)
Approved for use through 03/31/2012. OMB 0651-0016
U.S. Patent and Trademark Office: U.S. DEPARTMENT OF COMMERCE
Under the Paperwork Reduction Act of 1995, no persons are required to respond to a collection of information unless it displays valid OMB control number.

PETITION TO ACCEPT UNINTENTIONALLY DELAYED PAYMENT OF MAINTENANCE FEE IN AN EXPIRED PATENT (37 CFR 1.378(c))

Patent Number	Issue Date (YYYY-MM-DD)	Application Number	Filing Date (YYYY-MM-DD)	Docket Number (if applicable)
7,044,394	2006-05-16	10/738,376	2003-12-17	MLF 670-001

CAUTION: Maintenance fee (and surcharge, if any) payment must correctly identify: (1) the patent number and (2) the application number of the actual U.S. application leading to issuance of that patent to ensure the fee(s) is/are associated with the correct patent. 37 CFR 1.366(c) and (d).

SMALL ENTITY

☒ Patentee claims, or has previously claimed, small entity status. See 37 CFR 1.27.

LOSS OF ENTITLEMENT TO SMALL ENTITY STATUS

☐ Patentee is no longer entitled to small entity status. See 37 CFR 1.27(g)

NOT Small Entity			Small Entity		
	Fee	Code		Fee	Code
○	3 ½ year	(1551)	◉	3 ½ year	(2551)
○	7 ½ year	(1552)	○	7 ½ year	(2552)
○	11 ½ year	(1553)	○	11 ½ year	(2553)

SURCHARGE

The surcharge required by 37 CFR 1.20(i)(2) (Fee Code 1558) must be paid as a condition of accepting unintentionally delayed payment of the maintenance fee.

MAINTENANCE FEE (37 CFR 1.20(e)-(g))

The appropriate maintenance fee must be submitted with this petition.

STATEMENT

THE UNDERSIGNED CERTIFIES THAT THE DELAY IN PAYMENT OF THE MAINTENANCE FEE TO THIS PATENT WAS UNINTENTIONAL

PETITIONER(S) REQUEST THAT THE DELAYED PAYMENT OF THE MAINTENANCE FEE BE ACCEPTED AND THE PATENT REINSTATED

THIS PORTION MUST BE COMPLETED BY THE SIGNATORY OR SIGNATORIES

37 CFR 1.378(d) states: "Any petition under this section must be signed by an attorney or agent registered to practice before the Patent and Trademark Office, or by the patentee, the assignee, or other party in interest."

I certify, in accordance with 37 CFR 1.4(d)(4) that I am

◉ An attorney or agent registered to practice before the Patent and Trademark Office

○ A sole patentee

○ A joint patentee; I certify that I am authorized to sign this submission on behalf of all the other patentees.

○ A joint patentee; all of whom are signing this e-petition

○ The assignee of record of the entire interest

Patent Practitioner			
A signature of the applicant or representative is required in accordance with 37 CFR 1.33 and 10.18. Please see 37 CFR 1.4(d) for the form of the signature			
Signature	/Jubin Dana/	Date (YYYY-MM-DD)	2010-05-26
Name	Jubin Dana	Registration Number	41400

This collection of information is required by 37 CFR 1.378(c). The information is required to obtain or retain a benefit by the public which is to file (and by the USPTO to process) an application. Confidentiality is governed by 35 U.S.C. 122 and 37 CFR 1.11 and 1.14. This collection is estimated to take 1 hour to complete, including gathering, preparing, and submitting the completed application form to the USPTO. Time will vary depending upon the individual case. Any comments on the amount of time you require to complete this form and/ or suggestions for reducing this burden, should be sent to the Chief Information Officer, U.S. Patent and Trademark Office, U.S. Department of Commerce, P.O. Box 1450, Alexandria, VA 22313-1450. DO NOT SEND FEES OR COMPLETED FORMS TO THIS ADDRESS. **This form can only be used when in conjunction with EFS-Web. If this form is mailed to the USPTO, it may cause delays in reinstating the patent.**

Privacy Act Statement

The Privacy Act of 1974 (P.L. 93-579) requires that you be given certain information in connection with your submission of the attached form related to a patent application or patent. Accordingly, pursuant to the requirements of the Act, please be advised that: (1) the general authority for the collection of this information is 35 U.S.C. 2(b)(2); (2) furnishing of the information solicited is voluntary; and (3) the principal purpose for which the information is used by the U.S. Patent and Trademark Office is to process and/or examine your submission related to a patent application or patent. If you do not furnish the requested information, the U.S. Patent and Trademark Office may not be able to process and/or examine your submission, which may result in termination of proceedings or abandonment of the application or expiration of the patent.

The information provided by you in this form will be subject to the following routine uses:

1. The information on this form will be treated confidentially to the extent allowed under the Freedom of Information Act (5 U.S.C. 552) and the Privacy Act (5 U.S.C. 552a). Records from this system of records may be disclosed to the Department of Justice to determine whether the Freedom of Information Act requires disclosure of these records.

2. A record from this system of records may be disclosed, as a routine use, in the course of presenting evidence to a court, magistrate, or administrative tribunal, including disclosures to opposing counsel in the course of settlement negotiations.

3. A record in this system of records may be disclosed, as a routine use, to a Member of Congress submitting a request involving an individual, to whom the record pertains, when the individual has requested assistance from the Member with respect to the subject matter of the record.

4. A record in this system of records may be disclosed, as a routine use, to a contractor of the Agency having need for the information in order to perform a contract. Recipients of information shall be required to comply with the requirements of the Privacy Act of 1974, as amended, pursuant to 5 U.S.C. 552a(m).

5. A record related to an International Application filed under the Patent Cooperation Treaty in this system of records may be disclosed, as a routine use, to the International Bureau of the World Intellectual Property Organization, pursuant to the Patent Cooperation Treaty.

6. A record in this system of records may be disclosed, as a routine use, to another federal agency for purposes of National Security review (35 U.S.C. 181) and for review pursuant to the Atomic Energy Act (42 U.S.C. 218(c)).

7. A record from this system of records may be disclosed, as a routine use, to the Administrator, General Services, or his/her designee, during an inspection of records conducted by GSA as part of that agency's responsibility to recommend improvements in records management practices and programs, under authority of 44 U.S.C. 2904 and 2906. Such disclosure shall be made in accordance with the GSA regulations governing inspection of records for this purpose, and any other relevant (i.e., GSA or Commerce) directive. Such disclosure shall not be used to make determinations about individuals.

8. A record from this system of records may be disclosed, as a routine use, to the public after either publication of the application pursuant to 35 U.S.C. 122(b) or issuance of a patent pursuant to 35 U.S.C. 151. Further, a record may be disclosed, subject to the limitations of 37 CFR 1.14, as a routine use, to the public if the record was filed in an application which became abandoned or in which the proceedings were terminated and which application is referenced by either a published application, an application open to public inspections or an issued patent.

9. A record from this system of records may be disclosed, as a routine use, to a Federal, State, or local law enforcement agency, if the USPTO becomes aware of a violation or potential violation of law or regulation.

UNITED STATES PATENT AND TRADEMARK OFFICE

Commissioner for Patents
United States Patent and Trademark Office
P.O. Box 1450
Alexandria, VA 22313-1450
www.uspto.gov

In re Patent No. 7044394
Issue Date: May 16,2006
Application No. 10738376
Filed: December 17,2003
Attorney Docket No. MLF 670-01

:
:DECISION GRANTING PETITION
:UNDER 37 CFR 1.378(c)
:

This is a decision on the electronic petition, filed May 26,2010 ,under 37 CFR 1.378(c) to accept the unintentionally delayed payment of the 3.5 year maintenance fee for the above-identified patent.

The petition is **GRANTED**.

The maintenance fee is accepted, and the above-identified patent reinstated as of May 26,2010 . This decision also constitutes notice that the fee has been accepted. An electronic copy of the petition and this decision has been created as an entry in the Image File Wrapper. Nevertheless, petitioner should print and retain an independent copy.

Telephone inquiries related to this electronic decision should be directed to the Electronic Business Center at 1-866-217-9197.

UNITED STATES PATENT AND TRADEMARK OFFICE

COMMISSIONER FOR PATENTS
UNITED STATES PATENT AND TRADEMARK OFFICE
P.O. BOX 1450
ALEXANDRIA, VA 22313-1450
www.uspto.gov

ALBERT SMITH
FENWICK AND WEST LLC
801 CALIFORNIA ST.
SILICON VALLEY CTR.
MOUNTAIN VIEW, CA 94041

COPY MAILED
JUL 3 1 2006
OFFICE OF PETITIONS

In re Application of :
Andrew Yaung et al :
Application No. 10/738,405 : DECISION ON PETITION
Filed: December 16, 2003 : TO WITHDRAW
Attorney Docket No. 23939-08152 : FROM RECORD
:

This is a decision on the Request to Withdraw as attorney or agent of record under 37 C.F.R. § 1.36(b), filed February 3, 2006.

The request is **NOT APPROVED** as moot.

A review of the file record indicates that the power of attorney to Albert C. Smith has been revoked by the assignee of the patent application. Accordingly, the request to withdraw under 37 C.F.R. § 1.36(b) is moot.

The correspondence address of record remains unchanged, which is the first address indicated below.

Telephone inquires concerning this decision should be directed to Irvin Dingle at 571-272- 3210.

Amelia Au
Petitions Examiner
Office of Petitions

cc: Schneck & Schneck
P.O. Box 2-E
San Jose, CA 95109-0005

cc: David Schneck, Patent Attorney
Law Offices of Schneck & Schneck
80 S. Market Street, Third Floor
San Jose, CA 95113-2303

UNITED STATES PATENT AND TRADEMARK OFFICE

Commissioner for Patents
United States Patent and Trademark Office
P.O. Box 1450
Alexandria, VA 22313-1450
www.uspto.gov
DIW Jul-06

AVON PRODUCTS, INC.
AVON PLACE
SUFFERN NY 10901

COPY MAILED
JUL 25 2006
OFFICE OF PETITIONS

In re Application of :
Binetti et al. :
Application No. 10/738,413 : DECISION ON PETITION
Filed: 17 December, 2003 :
Atty Docket No. 3584-4047 :

This is a decision on the petition filed on 2 June, 2006, under 37 CFR 1.137(b),[1] to revive the above-identified application.

The petition is **GRANTED**.

The application became abandoned on 19 January, 2006, for failure to timely file a reply to the non-final Office action mailed on 18 October, 2005, which set a three (3) month shortened statutory period for reply. No extensions of the time for reply in accordance with 37 CFR 1.136(a) were obtained. The filing of the present petition precedes the mailing of Notice of Abandonment.

Petitioner has submitted an amendment as the required reply.

---

[1] Effective December 1, 1997, the provisions of 37 CFR 1.137(b) now provide that where the delay in reply was unintentional, a petition may be filed to revive an abandoned application or a lapsed patent pursuant to 37 CFR 1.137(b). A grantable petition filed under the provisions of 37 CFR 1.137(b) must be accompanied by:

(1) the required reply, unless previously filed. In a nonprovisional application abandoned for failure to prosecute, the required reply may be met by the filing of a continuing application. In a nonprovisional utility or plant application filed on or after June 8, 1995, and abandoned for failure to prosecute, the required reply may also be met by the filing of a request for continuing examination in compliance with § 1.114. In an application or patent, abandoned or lapsed for failure to pay the issue fee or any portion thereof, the required reply must be the payment of the issue fee or any outstanding balance thereof. In an application, abandoned for failure to pay the publication fee, the required reply must include payment of the publication fee.

(2) the petition fee as set forth in 37 CFR 1.17(m);

(3) a statement that the entire delay in filing the required reply from the due date for the reply until the filing of a grantable petition pursuant to 37 CFR 1.137(b) was unintentional. The Commissioner may required additional information where there is a question whether the delay was unintentional; and

(4) any terminal disclaimer (and fee as set forth in 37 CFR 1.20(d)) required pursuant to 37 CFR 1.137(c)).

The address listed on the petition filed on 24 December, 2003, is different than the correspondence address of record. A courtesy copy of this decision is being mailed to the address noted on the petition. However, until otherwise instructed, all future correspondence regarding this application will be mailed solely to the address of record.

The application is being referred to Technology Center 1635 for further processing.

Telephone inquiries concerning this matter may be directed to the undersigned at (571)272-3231.

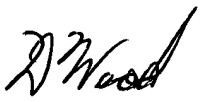

Douglas I. Wood
Senior Petitions Attorney
Office of Petitions

cc: MORGAN & FINNEGAN LLP
3 WORLD FINANCIAL CENTER
NEW YORK NY 10821-2101

UNITED STATES PATENT AND TRADEMARK OFFICE

Commissioner for Patents
United States Patent and Trademark Office
P.O. Box 1450
Alexandria, VA 22313-1450
www.uspto.gov

CORNING INCORPORATED
SP-TI-3-1
CORNING, NY 14831

COPY MAILED
MAY 0 8 2006
OFFICE OF PETITIONS

In re Application of :
Ddonald J. Ames et al :
Application No. 10/738,425 : DECISION GRANTING PETITION
Filed: December 16, 2003 : UNDER 37 CFR 1.313(c)(2)
Attorney Docket No. WJT003-0041 (SP03-173) :

This is a decision on the petition, filed May 8, 2005, under 37 CFR 1.313(c)(2) to withdraw the above-identified application from issue after payment of the issue fee.

The petition is **GRANTED**.

The above-identified application is withdrawn from issue for consideration of a submission under 37 CFR 1.114 (request for continued examination). See 37 CFR 1.313(c)(2).

Petitioner is advised that the issue fee paid on June 13, 2005 in the above-identified application cannot be refunded. If, however, the above-identified application is again allowed, petitioner may request that it be applied towards the issue fee required by the new Notice of Allowance.[1]

Telephone inquiries should be directed to the undersigned at (571) 272-3218.

This matter is being referred to Technology Center AU 1755 for processing of the request for continued examination under 37 CFR 1.114 and for consideration of the Information Disclosure Statement.

Frances Hicks
Petitions Examiner
Office of Petitions

C:\Documents and Settings\FHicks\My Documents\470\may9\738425.wpd

[1] *The request to apply the issue fee to the new Notice may be satisfied by completing and returning the new Part B – Fee(s) Transmittal Form (along with any balance due at the time of submission), which includes the following language thereon: "The Director of the USPTO is requested to apply the Issue Fee and Publication Fee (if any) or to re-apply any previously paid issue fee in the application identified above. Petitioner is advised that, whether a fee is indicated as being due or not, the Issue Fee Transmittal Form must be completed and timely submitted to avoid abandonment. Note the language in bold text on the first page of the Notice of Allowance and Fee(s) Due (PTOL-85).*

UNITED STATES PATENT AND TRADEMARK OFFICE

Commissioner for Patents
United States Patent and Trademark Office
P.O. Box 1450
Alexandria, VA 22313-1450
www.uspto.gov
DIW Oct-06

MACCORD MASON PLLC
300 N. GREENE STREET, SUITE 1600
P. O. BOX 2974
GREENSBORO NC 27402

COPY MAILED
OCT 0 4 2006
OFFICE OF PETITIONS

In re Application of :
Batton et al. :
Application No. 10/738,436 : DECISION ON PETITION
Filed: 17 December, 2003 :
Atty Docket No. 2913-030 :

This is a decision on the petition filed on 30 June, 2006, under 37 CFR 1.137(b),[1] to revive the above-identified application.

The petition is **GRANTED**.

The application became abandoned on 22 June, 2006, for failure to timely submit the issue fee in response to the Notice of Allowance and Fee(s) Due mailed on 21 March, 2006, which set a

[1] Effective December 1, 1997, the provisions of 37 CFR 1.137(b) now provide that where the delay in reply was unintentional, a petition may be filed to revive an abandoned application or a lapsed patent pursuant to 37 CFR 1.137(b). A grantable petition filed under the provisions of 37 CFR 1.137(b) must be accompanied by:

(1) the required reply, unless previously filed. In a nonprovisional application abandoned for failure to prosecute, the required reply may be met by the filing of a continuing application. In a nonprovisional utility or plant application filed on or after June 8, 1995, and abandoned for failure to prosecute, the required reply may also be met by the filing of a request for continuing examination in compliance with § 1.114. In an application or patent, abandoned or lapsed for failure to pay the issue fee or any portion thereof, the required reply must be the payment of the issue fee or any outstanding balance thereof. In an application, abandoned for failure to pay the publication fee, the required reply must include payment of the publication fee.

(2) the petition fee as set forth in 37 CFR 1.17(m);

(3) a statement that the entire delay in filing the required reply from the due date for the reply until the filing of a grantable petition pursuant to 37 CFR 1.137(b) was unintentional. The Commissioner may required additional information where there is a question whether the delay was unintentional; and

(4) any terminal disclaimer (and fee as set forth in 37 CFR 1.20(d)) required pursuant to 37 CFR 1.137(c)).

three (3) month shortened period for reply. Notice of Abandonment was mailed on 14 July, 2006.

This application is being referred to the Publishing Division for processing into a patent.

Telephone inquiries concerning this matter may be directed to the undersigned at (571)272-3231.

Douglas I. Wood
Senior Petitions Attorney
Office of Petitions

SPE RESPONSE FOR CERTIFICATE OF CORRECTION

Paper No.:20070206

DATE : February 6, 2007

TO SPE OF : ART UNIT 3753

SUBJECT : Request for Certificate of Correction on Patent No.: 7,134,152

A response is requested with respect to the accompanying request for a certificate of correction.

Please complete this form and return with file, within **7** days to:
Certificates of Correction Branch - PK 3-910
Palm location **7590** - Tel. No. 305-8201

With respect to the change(s) requested, correcting Office and/or Applicant's errors, should the patent read as shown in the certificate of correction? No new matter should be introduced, nor should the scope or meaning of the claims be changed.

Thank You For Your Assistance **Certificates of Correction Branch**

The request for issuing the above-identified correction(s) is hereby:
Note your decision on the appropriate box.

☒ **Approved** **All** changes apply.

☐ **Approved in Part** Specify below which changes **do not** apply.

☐ **Denied** State the reasons for denial below.

Comments:

Eric Keasel

SPE: Eric Keasel **Art Unit** 3753

UNITED STATES PATENT AND TRADEMARK OFFICE

Commissioner for Patents
United States Patent and Trademark Office
P.O. Box 1450
Alexandria, VA 22313-1450
www.uspto.gov

HENRY M FEIEREISEN, LLC
HENRY M FEIEREISEN
708 THIRD AVENUE
SUITE 1501
NEW YORK NY 10017

MAILED

MAY 25 2010

OFFICE OF PETITIONS

In re Patent No. 7,077,752	:	
Issue Date: July 18, 2006	:	
Application No. 10/738,458	:	ON PETITION
Filed: December 16, 2003	:	
Attorney Docket No. ROHS-12/11	:	

This is a notice regarding your request for acceptance of a fee deficiency submission under 37 CFR 1.28. On September 1, 1998, the Court of Appeals for the Federal Circuit held that 37 CFR 1.28(c) is the sole provision governing the time for correction of the erroneous payment of the issue fee as a small entity. **See DH Technology v. Synergystex International, Inc. 154 F.3d 1333, 47 USPQ2d 1865 (Fed. Cir. Sept. 1, 1998).**

The Office no longer investigates or rejects original or reissue applications under 37 CFR 1.56. **1098 Off. Gaz. Pat. Office 502 (January 3, 1989)**. Therefore, nothing in this Notice is intended to imply that an investigation was done.

Currently, it is not apparent whether the person signing the instant petition has power of attorney or authorization of agent to prosecute this patent. In accordance with 37 CFR 1.34(a), the signature appearing on the petition shall constitute a representation to the United States Patent and Trademark Office that he/she is authorized to represent the particular party in whose behalf he/she acts.

Your fee deficiency submission under 37 CFR 1.28 is hereby **ACCEPTED**.

This patent is no longer entitled to small entity status. Accordingly, all future fees paid in this patent must be paid at the large entity rate.

Telephone inquiries concerning this decision should be directed to the undersigned at (571) 272-7751.

Joan Olszewski
Petitions Examiner
Office of Petitions

UNITED STATES PATENT AND TRADEMARK OFFICE

Commissioner for Patents
United States Patent and Trademark Office
P.O. Box 1450
Alexandria, VA 22313-1450
www.uspto.gov

mb

Mailed: 6-14-07

In re application of :
Tour et al. : DECISION ON
Serial No. 10/738,459 : PETITION
Filed: December 17, 2003 :
For: USE OF MICROWAVES TO CROSSLINK CARBON NANOTUBES

This is a decision on the PETITION UNDER 37 CFR 1.181 TO WITHDRAW THE FINALITY OF THE OFFICE ACTION, filed May 1, 2007.

On September 12, 2006, a non-final office action was mailed to applicant rejecting all of the claims. A reply to the office action was filed by applicants on January 8, 2007. In the reply, applicants made amendments to the claims. A final office action was mailed by the office on March 14, 2007 containing new grounds of rejection. On May 1, 2007, the instant petition under 37 CFR 1.181 was timely filed to formally request the withdrawal of finality of the March 14, 2007 office action.

Petitioner's position for the withdrawal of the finality is that the new grounds of rejection in the final office action were not necessitated by applicant's amendments to the claims.

DECISION

Section 706.07 of the MPEP states:

706.07(a) Final Rejection, When Proper on Second Action

Under present practice, second or any subsequent actions on the merits shall be final, except where the examiner introduces a new ground of rejection that is neither necessitated by applicant's amendment of the claims nor based on information submitted in an information disclosure statement filed during the period set forth in 37 CFR 1.97(c) with the fee set forth in 37 CFR 1.17(p).

In the reply, filed January 8, 2007, to non-final rejection of September 12, 2006, applicants amended the independent claims to include the step of providing the carbon nanotubes. The examiner established a new grounds of rejection in the final office action of March 14, 2007. The petitioner argues that the amendment did not warrant a new search and that the amendment did not change the scope of the claims, as carbon nanotubes must be present (i.e. provided) in order to perform the crosslinking. The petitioner's argument as merit. The amendment to the

claims of January 8, 2007, merely positively adds a step of providing carbon nanotubes. The claims as rejected in the non-final action of September 12, 2006, required irradiating and crosslinking the carbon nanotubes. The carbon nanotubes must have been present (i.e. provided) in order to have been irradiated and crosslinked, in the claims as rejected in the September 12, 2006 non-final office action. Therefore, it is deemed that the amendment of January 8, 2007 did not change the scope of the claims. Because scope of the claims were not changed by the amendment of January 8, 2007, it is deemed that the new grounds of rejection in the final office action mailed March 14, 2007 were not necessitated by amendment.

Therefore, the finality of the office action was premature. Accordingly, the petition for withdrawal of finality is **GRANTED.**

It is also pointed out that while the finality of the office action has been withdrawn, the rejection still stands. It is also noted that a response was filed on May 14, 2007. The application will be forwarded to the examiner for consideration of that response.

/

Jacqueline M. Stone, Director
Technology Center 1700
Chemical and Materials Engineering

ROBERT C. SHADDOX
WINSTEAD PC
P.O. BOX 50784
DALLAS, TX 75201

UNITED STATES PATENT AND TRADEMARK OFFICE

Commissioner for Patents
United States Patent and Trademark Office
P.O. Box 1450
Alexandria, VA 22313-1450
www.uspto.gov

PHILIP S. JOHNSON
JOHNSON & JOHNSON
ONE JOHNSON & JOHNSON PLAZA
NEW BRUNSWICK, NJ 08933-7003

COPY MAILED

JUN 17 2009

OFFICE OF PETITIONS

In re Application of :
Donald K. Jones, et. al. :
Application No. 10/738,477 : ON PETITION
Filed: December 17, 2003 :
Attorney Docket No. CRD5046USANP :

This is a decision on the petition under 37 CFR 1.137(b), filed April 27, 2009, to revive the above-identified application.

The petition satisfies the requirements of 37 CFR 1.137(b) in that petitioner has supplied (1) the reply in the form of a Request for Continued Examination (RCE) with the $810 fee; (2) the petition fee of $1,620; and (3) a proper statement of unintentional delay. Therefore, the petition is **GRANTED**.

This application file is being referred to Technology Center Art Unit 3767 for processing of the RCE and for appropriate action by the Examiner in the normal course of business on the previously submitted amendment.

Telephone inquiries concerning this decision should be directed to the undersigned at (571) 272-3226.

Andrea Smith
Petitions Examiner
Office of Petitions

UNITED STATES PATENT AND TRADEMARK OFFICE

Commissioner for Patents
United States Patent and Trademark Office
P.O. Box 1450
Alexandria, VA 22313-1450
www.uspto.gov

David C. Ripma
Sharp Laboratories of America, Inc.
5750 NW Pacific Rim Boulevard
Camas WA 97202

In re Application of	:	
ISHII, ATSUSHI	:	
Application No.: 10/738487	:	DECISION ON
Filing or 371(c) Date: December 17, 2003	:	PETITION
Attorney Docket Number: **SLA.1313**	:	

This is a decision in response to the "Petition to Withdraw Holding of Abandonment," filed June 30, 2008 .

The petition is **GRANTED**.

The above-identified application became abandoned for failure to timely and properly reply to the Notice of Allowance, January 24, 2008.

In view of the foregoing, the holding of abandonment for failure to timely pay the issue fee is hereby withdrawn and the application restored to pending status.

Telephone inquiries concerning this matter should be directed to the undersigned at (703) 756 - 1499.

Kendrick Sprunt
Application Assistance Unit
Office of Data Management

UNITED STATES PATENT AND TRADEMARK OFFICE

Commissioner for Patents
United States Patent and Trademark Office
P.O. Box 1450
Alexandria, VA 22313-1450
www.uspto.gov

KNOBBE MARTENS OLSON & BEAR LLP
2040 MAIN STREET
FOURTEENTH FLOOR
IRVINE CA 92614

2/29/08

In re Application of :
Jones, Christopher S. et al
Appl. No.: 10/738,488
Filed: Dec. 16, 2003
Attorney Docket Number: VNUS.502PCP1DVC
For: EXPANDABLE CATHETER HAVING TWO SETS OF ELECTRODES, AND METHOD OF USE

DECISION ON PETITION
UNDER 37 CFR 1.59

This is a decision on the petition under 37 CFR 1.59(b), filed Jan. 8, 2008 to expunge information from the above identified application.

The decision on the petition will be held in abeyance until allowance of the application or mailing of an *Ex parte Quayle* action or a Notice of Abandonment, at which time the petition will be decided.

Petitioner requests that the information submitted in the Information Disclosure Statement under the heading of Non Patent Literature Documents, (total of nine documents) filed Jan. 8, 2008 be expunged from the record. Petitioner states either: (A) that the information contains trade secret material, proprietary material and/or material that is subject to a protective order which has not been made public; or (B) that the information submitted was unintentionally submitted and the failure to obtain its return would cause irreparable harm to the party who submitted the information or to the party in interest on whose behalf the information was submitted, and the information has not otherwise been made public. The petition fee set forth in 37 CFR 1.17(g) has been charged.

The decision on the petition is held in abeyance because prosecution on the merits is not closed. Accordingly, it is not appropriate to make a final determination of whether or not the material requested to be expunged is "material," with "materiality" being defined as any information

which the examiner considers as being important to a determination of patentability of the claims. Thus, the decision on the petition to expunge must be held in abeyance at this time.

During prosecution on the merits, the examiner will determine whether or not the identified document is considered to be "material." If the information is not considered by the examiner to be material, the information will be removed from the official file. The information has been closed from public view for the remainder of prosecution.

Questions concerning this decision should be directed to Special Programs Examiner Henry C. Yuen at 571-272-4856.

Decision held in ABEYANCE.

for Karen M. Young

Frederick R. Schmidt, Director
Technology Center 3700

UNITED STATES PATENT AND TRADEMARK OFFICE

Commissioner for Patents
United States Patent and Trademark Office
P.O. Box 1450
Alexandria, VA 22313-1450
www.uspto.gov

Knobbe, Martens Olson & Bear LLP
2040 Main Street
Fourteenth Floor
Irvine, CA 92614

6/30/08

In re Application of Jones et al.
Appl. No.: 10/738,488
Filed: December 16, 2003
Attorney Docket Number: VNUS.502PCP1DVC
For: EXPANDABLE CATHETER HAVING TWO SETS OF ELECTRODES, AND METHOD OF USE

DECISION ON PETITION UNDER 37 CFR 1.59

This is a renewed decision on the petition under 37 CFR 1.59(b), filed January 8, 2008, to expunge information from the above identified application. The original decision on the petition was held in abeyance until allowance of the application or mailing of an *Ex Parte Quayle* action or a Notice of Abandonment, at which time the petition would be decided.

The petition is granted.

Petitioners had requested that a document entitled Information Disclosure Statement under MPEP § 724.02 containing "Materials Subject to Protective Order", filed January 8, 2008, be expunged from the record. Petitioners had stated that the information contains trade secret material, proprietary material and/or material that is subject to a protective order which has not been made public. The petition fee set forth in 37 CFR 1.17(g) has been paid.

Applicants expressly abandoned the application on May 27, 2008. MPEP § 724.04 states that with the mailing of a notice of abandonment, a petition to expunge will be granted and the materials expunged irrespective of whether the materials are found to be material to patentability.

The expunged material has been removed from the official file. It is contained in a non-public Artifact folder associated with the application and will not be returned to applicants.

Any questions regarding this petition decision should be directed to Josie Ballato, Technology Center 3700 Special Programs Examiner at 571-272-3567.

Frederick R. Schmidt, Director
Technology Center 3700
Mechanical Engineering, Manufacturing, Products and Designs

Enclosure: Information Disclosure Statement under MPEP § 724.02 containing "Materials Subject to Protective Order", filed January 8, 2008

UNITED STATES PATENT AND TRADEMARK OFFICE

UNITED STATES DEPARTMENT OF COMMERCE
United States Patent and Trademark Office
Address: COMMISSIONER FOR PATENTS
P.O. Box 1450
Alexandria, Virginia 22313-1450
www.uspto.gov

APPLICATION NO.	FILING DATE	FIRST NAMED INVENTOR	ATTORNEY DOCKET NO.	CONFIRMATION NO.
10/738,493	12/17/2003	B. J. Anderson	31203-30004	7859

26781 7590 06/11/2008

BROUSE MCDOWELL LPA
388 SOUTH MAIN STREET
SUITE 500
AKRON, OH 44311

EXAMINER	
CAIN, EDWARD J	
ART UNIT	**PAPER NUMBER**
1796	

NOTIFICATION DATE	DELIVERY MODE
06/11/2008	ELECTRONIC

Please find below and/or attached an Office communication concerning this application or proceeding.

The time period for reply, if any, is set in the attached communication.

Notice of the Office communication was sent electronically on above-indicated "Notification Date" to the following e-mail address(es):

iplaw@brouse.com

PATENT

IN THE UNITED STATES PATENT AND TRADEMARK OFFICE

IN RE APPLICATION OF	:	B. Anderson
FOR	:	**PIGMENT DISPERSANT SYSTEM AND METHOD FOR PIGMENT GRINDING**
SERIAL NO.	:	10/738,493
FILED	:	December 17, 2003
PATENT NO.	:	N/A
ISSUE DATE	:	N/A
ATTORNEY DOCKET NO.	:	31203.30004

6-11-08
Approved
Jacqueline M. Stone
Jacqueline M. Stone, Director
Technology Center 1700

Confirmation No.: 7859
Customer #26781

****

CERTIFICATE OF MAILING

I hereby certify that this **APPLICATION TO WITHDRAW AS ATTORNEY OF RECORD ACCORDING TO 37 C.F.R. § 1.36** is being deposited via EFS-Web electronic filing to: Commissioner for Patents, P.O. Box 1450, Alexandria, VA 22313-1450 on the following date:

4-3-08
Date

/s/ Connie J. Nutter
Connie J. Nutter

****

APPLICATION TO WITHDRAW AS ATTORNEY OF RECORD ACCORDING TO 37 C.F.R. § 1.36

Commissioner for Patents
P.O. Box 1450
Alexandria, VA 22313-1450

Dear Sir:

Pursuant to 37 C.F.R. § 1.36, the undersigned, Heather M. Barnes, Esq., and all attorneys associated with the law firm of Brouse McDowell, hereby request permission to withdraw as attorneys herein.

Three former Brouse McDowell attorneys, Roger D. Emerson, Daniel A. Thomson, and Timothy D. Bennett, formed their own law firm Emerson, Thomson & Bennett. Subsequently, the client terminated its relationship with Brouse McDowell and requested its files be transferred to Emerson, Thomson & Bennett. Pursuant to the mandatory withdrawal provisions of 37 C.F.R. § 10.40(b)(4), Brouse McDowell and the undersigned individually, and on behalf of the attorneys at Brouse McDowell, request that the attorneys listed under customer number 26781 be removed as attorneys of record.

I have delivered to Applicant's new counsel the file for which I was responsible and information they have given to me. Thereby, I have effectively empowered them to carry on prosecution of the patent. Therefore, I believe I have complied with all the obligations placed upon me by the U.S. Patent and Trademark Office to allow such withdrawal and believe I am entitled to the application requested.

We are withdrawing the following contact information:

Brouse McDowell
388 South Main Street
Suite 500
Akron, OH 44311

Phone: 330-535-5711
Fax: 330-253-8601

E-mail: iplaw@brouse.com
Customer No.: 26781

Please send all further correspondence directly to Applicant at the following address:

Emerson, Thomson & Bennett
777 West Market Street
Akron, Ohio 44303
Phone: 330-434-9999
Fax: 330-434-8888
E-mail: dat@emersonthomson.com

Respectfully submitted,

BROUSE MCDOWELL

4-3-08
Date

/s/ Heather M. Barnes
Heather M. Barnes, Esq.
Reg. No. 44,022

Telephone No.: (330) 535-5711
Fax No.: (330) 253-8601

Customer #26781

UNITED STATES PATENT AND TRADEMARK OFFICE

Commissioner for Patents
United States Patent and Trademark Office
P.O. Box 1450
Alexandria, VA 22313-1450
www.uspto.gov

Maine & Asmus
PO Box 3445
Nashua, NH 03061-3445

COPY MAILED

MAR 1 5 2006

OFFICE OF PETITIONS

In re Patent of Baker et al.	:	
Patent No. 6,955,569	:	
Issue Date: October 18, 2005	:	Letter
Application No. 10/738,501	:	
Filing Date: December 17, 2003	:	
Attorney Docket No. 81762/371	:	

This is a notice regarding your request for acceptance of a fee deficiency submission under 37 CFR 1.28(c), filed January 17, 2006.

The fee deficiency is **accepted** as provided below.

The petition indicates an additional $615 is due for the filing, search, and examination fees. However, search and examination fees do not apply to applications filed before December 8, 2004. The filing fee for these applications is $790 for a large entity. Therefore, the fee deficiency is $405 rather than $615.

Petitioner's credit card was not charged the excess $210.

The change of status to large entity has been entered and made of record.

Telephone inquiries regarding this communication should be directed to Petitions Attorney Steven Brantley at (571) 272-3203.

Charles Steven Brantley
Senior Petitions Attorney
Office of Petitions

UNITED STATES PATENT AND TRADEMARK OFFICE

UNDER SECRETARY OF COMMERCE FOR INTELLECTUAL PROPERTY AND
DIRECTOR OF THE UNITED STATES PATENT AND TRADEMARK OFFICE
WASHINGTON, DC 20231
www.uspto.gov

Julie H. Richardson
MYERS BIGEL SIBLEY & SAJOVEC
P.O. Box 37428
Raleigh, NC 27627

In re:	Samuel D. Griggs, et al	:	DECISION ON REQUEST
Serial No.:	10/738,547	:	UNDER 37 CFR 5.25
Filing date:	01 April 2004		
Docket No:	9389-11		

Title: NETTING CHUTE FOR MANUAL AND/OR AUTOMATED CLIPPING PACKAGING APPARATUS

In view of the communication(s) filed 01 April 2004 it has been determined that a retroactive license for foreign filing under 35 U.S.C. 184 be granted with respect to the filings listed below. The petition complies with 37 C.F.R. 5.25 in that there is an adequate showing that the subject matter in question was not under secrecy order, that the license was diligently sought after discovery of the proscribed foreign filing, and that the material was filed abroad without the required license under 37 C.F.R. 5.11 first having been obtained through error and without deceptive intent.

Country	Date
Canada	31 December 2003
Mexico	12 January 2004

Approved:

Andrea M. Valenti

Andrea M. Valenti
Patent Examiner
Group 3643
(703) 305-3010

09 June 2004

UNITED STATES PATENT AND TRADEMARK OFFICE

Commissioner for Patents
United States Patent and Trademark Office
P.O. Box 1450
Alexandria, VA 22313-1450
www.uspto.gov

SCHWABE WILLIAMSON & WYATT
PACWEST CENTER, SUITES 1600-1900
1211 S.W. FIFTH AVE.
PORTLAND, OR 97204

COPY MAILED

OCT 19 2005

OFFICE OF PETITIONS

In re Application of :
Reza M. Golzarian et al :
Application No. 10/738,549 : ON PETITION
Filed: December 17, 2003 :
Attorney Docket No. 109263-133806 :

This is a decision on the petition under 37 CFR 1.137(b), filed September 22, 2005, to revive the above-identified application.

The petition is **GRANTED.**

The above-identified application became abandoned for failure to submit the Issue fee and publication fee in a timely manner in reply to the Notice of Allowance mailed June 13, 2005, which set a statutory period for reply of three (3) months. Accordingly, the above-identified application became abandoned on September 14, 2005.

The petition satisfies the conditions for revival pursuant to the provisions of 37 CFR 1.137(b) in that (1) the reply in the form of payment of the issue fee; (2) the petition and publication fees; and (3) the required statement of unintentional delay have been received. Accordingly, the issue fee is accepted as having been unintentionally delayed.

Telephone inquiries concerning this decision should be directed to the undersigned at (571) 272-3210.

This application is being forwarded to the Publishing Division for further processing.

Irvin Dingle
Petitions Examiner
Office of Petitions

filed application in the transmittal letter filed with the application, as shown by its inclusion on the filing receipt.

In view of the above, the $130.00 petition fee submitted is unnecessary and will be refunded to petitioner's deposit account in due course.

Any questions concerning this decision on petition may be directed to Wan Laymon at (571) 272-3220. All other inquiries concerning either the examination procedures or status of the application should be directed to the Technology Center.

This matter is being referred to the Examiner of Technology Center AU 1764 for appropriate action on the amendment filed October 22, 2004, including consideration of the claim under 35 U.S.C. § 120 and 37 CFR 1.78(a)(2) for benefit of the above-noted, prior-filed application.

Frances Hicks
Lead Petitions Examiner
Office of Petitions
Office of the Deputy Commissioner
for Patent Examination Policy

UNITED STATES PATENT AND TRADEMARK OFFICE

COMMISSIONER FOR PATENTS
UNITED STATES PATENT AND TRADEMARK OFFICE
P.O. BOX 1450
ALEXANDRIA, VA 22313-1450
www.uspto.gov

Sonnenschein Nath & Rosenthal LLP
P. O. Box 061080
Wacker Drive Station, Sears Tower
Chicago, IL 60606-1080

COPY MAILED

OCT 25 2005

OFFICE OF PETITIONS

In re Application of	:	
Daniela Salvemini	:	
Application No. 10/738,578	:	DECISION GRANTING
Filed: December 16, 2003	:	PETITION
Attorney Docket No. 60019610-0340	:	

This is a decision on the petition filed July 21, 2004, requesting that the above-identified application be accorded a filing date of December 16, 2004.

A review of the file record shows that USPTO records have been updated to reflect the correct filing date pursuant to 37 CFR 1.10. A corrected Official Filing Receipt was mailed to applicant on June 14, 2004 and again on July 27, 2004.

In view of the above, the petition is **DISMISSED AS MOOT**

This application file is being referred to the Office of Initial Patent Examination for further processing.

Telephone inquiries relating to this decision should be directed to the undersigned at (571) 272-3223. Telephone inquiries related to OIPE processing should be directed to their hotline at (703) 308-1202.

Marianne E. Jenkins
Petitions Examiner
Office of Petitions

UNITED STATES PATENT AND TRADEMARK OFFICE

Commissioner for Patents
United States Patent and Trademark Office
P.O. Box 1450
Alexandria, VA 22313-1450
www.uspto.gov

MAILED FROM
DIRECTORS OFFICE
OCT 18 2007
TECHNOLOGY CENTER 2800

BROOKS KUSHMAN P.C. /LEAR CORPORATION
1000 Town Center
Twenty-Second Floor
Southfield, MI 48075-1238

In re Application of:
Martin Lindstrom
Serial No.: 10/738,612
Filed: December 17, 2003
Attorney Docket No.: LEAR03917PUSA

SUA SPONTE
DECISION WITHDRAWING HOLDING OF ABANDONMENT

This is a decision, *sua sponte*, withdrawing the holding of abandonment of the above-identified application.

The application was held abandoned for failure to timely file a response to the communication mailed on January 26, 2005. A Notice of Abandonment was mailed on March 24, 2006.

A review of the written record indicates that the Applicant did file a proper response to the communication with a certificate of mailing dated Mach 28, 2006. Since the response was timely filed, the abandonment of the Application was premature. Therefore, the Application was not abandoned in fact.

For the above stated reason, the Notice of Abandonment is hereby vacated and the holding of abandonment withdrawn. The application is restored to pending status. The Applicant is being forwarded to the Examiner for further action.

Inquiries related to this decision should be directed to T. C. Patel at (571) 272-2098.

Sharon A. Gibson, Director
Technology Center 2800
Semiconductors, Electrical and Optical
Systems and Components

UNITED STATES PATENT AND TRADEMARK OFFICE

Commissioner for Patents
United States Patent and Trademark Office
P.O. Box 1450
Alexandria, VA 22313-1450
www.uspto.gov

BROOKS KUSHMAN P.C. / LEAR CORPORATION
1000 TOWN CENTER
TWENTY-SECOND FLOOR
SOUTHFIELD, MI 48075-1238

COPY MAILED

NOV 2 1 2007

OFFICE OF PETITIONS

In re Application of Lindstrom et al. :
Application No. 10/738,612 : Decision on Petition
Filing Date: December 17, 2003 :
Attorney Docket No. LEAR03917PUSA :

This is a decision on the petition under 37 CFR 1.181, filed April 7, 2006, to withdraw the holding of abandonment.

The petition is **dismissed as moot**.

The Office mailed an Office action under Ex parte Quayle, 1935 Dec. Comm'r Pat. 11 (1935), on January 26, 2005. The Office action set a shortened statutory period for reply of two (2) months.

A reply to the Office action was received on March 31, 2005. The reply included a Certificate of Mailing dated Monday, March 28, 2005.

A Notice of Abandonment was mailed March 24, 2006. The Notice stated a reply had not been received in response to the January 26, 2005 Office action.

The instant petition to withdraw the holding of abandonment was filed April 7, 2006.

On October 18, 2007, the Office sent petitioner a letter *sua sponte* withdrawing the holding of abandonment. The Office need not grant the petition since the holding of abandonment has already been withdrawn. Therefore, the instant petition is dismissed as moot.

Technology Center Art Unit 2839 will be informed of the instant decision.

Telephone inquiries regarding this communication should be directed to Petitions Attorney Steven Brantley at (571) 272-3203.

Charles Steven Brantley
Senior Petitions Attorney
Office of Petitions

UNITED STATES PATENT AND TRADEMARK OFFICE

Commissioner for Patents
United States Patent and Trademark Office
P.O. Box 1450
Alexandria, VA 22313-1450
www.uspto.gov

CONNOLLY BOVE LODGE & HUTZ LLP
P.O. BOX 2207
WILMINGTON DE 19899

COPY MAILED

APR 16 2008

OFFICE OF PETITIONS

In re Application of :
Edward J.A. Pope, et al. :
Application No. 10/738,631 : ON PETITION
Filed: December 16, 2003 :
Attorney Docket No. 70071.00007-US :
(POPE#6(CI

This is a decision on the petition, filed October 18, 2007, under 37 CFR 1.137(b), which is being treated as a petition to revive the above-identified application under the provisions of 37 CFR 1.137(a).

The petition is **GRANTED.**

A review of the record discloses that this application became abandoned for a failure to respond to a Notice to File Missing Parts on Nonprovisional Application mailed April 28, 2004. A Notice of Abandonment was subsequently mailed on January 7, 2005. For some unknown reason, on March 30, 2006, the Notice of Abandonment was withdrawn and a new Notice to File Missing Parts of Nonprovisional Application was mailed. Applicant responded with the requisite filing fees, surcharge and an executed declaration on April 3, 2006. On September 19, 2007, the surcharge and filing fees were refunded to counsel's deposit account and a Notice of Abandonment issued on September 20, 2007. In response, on October 18, 2007, the present petition was filed, wherein petitioner argues that the petition supports revival of this application under the provisions of 37 CFR 1.137(a).

Petitioner should note that the application became abandoned by operation of law on June 29, 2004 and the actions of the Office of Initial Patent Examination did not have the force and effect of saving this application from its abandoned condition. Nevertheless this decision ratifies the ensuing prosecution and restores this application to pending status.

Since the requisite surcharge and filing fees have been refunded, the fees will again be charged to counsel's deposit account as authorized in the Response to the Notice of Missing Parts filed April 3, 2006. Also, petitioner is entitled to a refund of $515 (the difference between the 1.137(b) petition fee of $770 and the $1.137(a) petition fee of $255. Any request for refund must included a copy of this

decision and be mailed to Mail Stop 16, Director of the U.S. Patent and Trademark Office, P. O. Box 1450, Alexandria, VA 22313-1450 or faxed to the Customer Service Help Desk at (571) 273-6500.

The application is being referred to the Office of Patent Application Processing (OPAP) for further processing using the declaration filed April 3, 2006.

Telephone inquires related to this decision should be directed to the undersigned at (571) 272-3204. Telephone inquiries related to processing at OPAP should be directed to their hotline at (571) 272-4000.

Sherry D. Brinkley
Petitions Examiner
Office of Petitions

UNITED STATES PATENT AND TRADEMARK OFFICE

COMMISSIONER FOR PATENTS
UNITED STATES PATENT AND TRADEMARK OFFICE
P.O. BOX 1450
ALEXANDRIA, VA 22313-1450
www.uspto.gov

JJGJR.: 01-054

Paper No: __

FITCH EVEN
TABIN AND FLANNERY
120 SOUTH LA SALLE STREET
SUITE 1600
CHICAGO IL 60603-3406

COPY MAILED

JAN 21 2005

OFFICE OF PETITIONS

In re Application of
Landis, et al.
Application No. 10/738,636
Filed: 17 December, 2003
Attorney Docket No. 78499

ON PETITION

This is a decision on the petition under ¶(a) of 37 C.F.R. §1.47, filed on 4 October, 2004.

The petition is **GRANTED**.

BACKGROUND

The record indicates:

- the application was filed on 17 December. 2003, without, *inter alia*, a fully executed oath or declaration; and

- on 29 March, 2004, the Office mailed a Notice to File Missing Parts, requiring, *inter alia*, that Petitioner file a signed oath/declaration;

- on 4 October, 2004, Petitioner filed (over a 29 September, 2004, certificate of mailing), *inter alia*, the instant petition, an oath/declaration signed by named inventors Jones, Agarwal, Sasulla, Martinez and Pokusa on behalf of themselves and the non-signing inventor Russel J. Landis (Mr. Landis), a request and fee for a four-month extension of time, and narratives by Petitioner Jon A. Birmingham (Reg. No. 51,222) evidencing that the entire application was

transmitted to the non-signing inventor at his last known address and setting forth that address, but that he failed to respond positively to the request that he sign the declaration.

Lastly, Petitioner has submitted a declaration in compliance with 37 C.F.R. §1.63 and §1.64.

This application and papers have been reviewed and found in compliance with 37 C.F.R. §1.47(a).

This application hereby is **ACCORDED status under 37 C.F.R. §1.47(a)**.

As provided under 37 C.F.R. §1.47(a), the Office will forward notice of this application's filing to the non-signing inventor at the address given in the petition.

Notice of the filing of this application also will be published in the Official Gazette.

This file is being released to OIPE for processing as necessary to reflect the instant decision before being released for examination in due course.

Telephone inquiries concerning this decision may be directed to the undersigned at (571) 272-3214.

John J. Gillon, Jr.
Senior Attorney
Office of Petitions

UNITED STATES PATENT AND TRADEMARK OFFICE

COMMISSIONER FOR PATENTS
UNITED STATES PATENT AND TRADEMARK OFFICE
P.O. BOX 1450
ALEXANDRIA, VA 22313-1450
www.uspto.gov

JJGJR.: 01-054

Paper No: __

RUSSEL J. LANDIS
5200 WEST STONEY CREEK DRIVE
OAK LAWN, IL 50453

COPY MAILED

JAN 21 2005

OFFICE OF PETITIONS

In re Application of
Landis, et al.
Application No. 10/738,636
Filed: 17 December, 2003
Attorney Docket No. 78499

COMMUNICATION

Dear Russel J. Landis:

You are named as inventor in the above-identified United States patent application, filed under the provisions of 35 U.S.C. §116 (United States Code), and 37 C.F.R. §1.47, ¶a, Rules of Practice in Patent Cases.

Should a patent be granted on the application you will be designated therein as inventor.

As a named inventor you are entitled to inspect any paper in the file wrapper of the application, order copies of all or any part thereof (at a prepaid cost per 37 C.F.R. §1.19) or make your position of record in the application.

Alternatively, you may arrange to do any of the preceding through a registered patent attorney or agent presenting written authorization from you. If you care to join the application, counsel of record (see below) would presumably assist you. Joining in the application would entail the filing of an appropriate oath or declaration by you pursuant to 37 C.F.R. §1.63.

Requests for information regarding your application should be directed to the File Information Unit at (703) 308-2733.

Information regarding how to pay for and order a copy of the application, or a specific paper in

the application, should be directed to Certification Division at (703) 308-9726 or toll-free: (800) 972-6382 (outside the Washington D.C. area).

Telephone inquiries concerning this correspondence may be directed to the undersigned at (571) 272-3214.

John J. Gillon, Jr.
Senior Attorney
Office of Petitions

Counsel of Record:
FITCH EVEN
TABIN AND FLANNERY
120 SOUTH LA SALLE STREET
SUITE 1600
CHICAGO IL 60603-3406

UNITED STATES PATENT AND TRADEMARK OFFICE

Commissioner for Patents
United States Patent and Trademark Office
P.O. Box 1450
Alexandria, VA 22313-1450
www.uspto.gov

Paper No.

Amy E. Sampson
PAUL, HASTINGS, JANOFSKY &
WALKER LLP
P.O. Box 919092
San Diego, CA 92191-9092

MAILED

JUL 19 2006

TECHNOLOGY CENTER 2100

In re Application of:
Hsiao Lai Mei
Application No. 10/738,639
Filed: December 16, 2003
For: SYSTEMS AND METHODS FOR 3D MODELING AND CREATION OF A DIGITAL ASSET LIBRARY

DECISION ON REQUEST TO WITHDRAW AS ATTORNEY OR AGENT

This is a decision on the Request To Withdraw from Representation filed July 20, 2005.

A grantable request to withdraw as attorney of record should indicate thereon the present mailing addresses of the attorney(s) who is/are withdrawing from the record and of the applicant. The request for withdrawal must be signed by every attorney seeking to withdraw or contain a clear indication that one attorney is signing on behalf of another/others. A request to withdraw will not be approved unless at least 30 (thirty) days would remain between the date of approval and the later of the expiration date of a time to file a response or the expiration date of the maximum time period which can be extended under 37 C.F.R. ∋ 1. 136(a). The effective date of withdrawal being the date of decision and not the date of request. **See M.P.E.P. ∋ 402.06. 37 C.F.R. ∋ 1.36 further requires that the applicant or patent owner be notified of the withdrawal of the attorney or agent.**

There is no indication that Applicant has been notified of the request for withdrawal.

Accordingly, the request is **DENIED**.

All future communications from the United States Patent and Trademark Office (Office) will continue to be directed to the above-listed address until otherwise notified by applicant.

Applicant is reminded of the obligation to promptly notify the Office of any change in correspondence address to ensure receipt of all communications from the Office.

James R. Matthews

FM

Vincent N. Trans
Special Program Examiner
Technology Center 2100
Computer Architecture, Software, and
Information Security
(571) 272-3613

UNITED STATES PATENT AND TRADEMARK OFFICE

Commissioner for Patents
United States Patent and Trademark Office
P.O. Box 1450
Alexandria, VA 22313-1450
www.uspto.gov

Paper No.

Amy E. Sampson
PAUL, HASTING, JANOFSKY &
WALKER LLP
P.O. Box 919092
San Diego, CA 92191-9092

MAILED

JUL 19 2006

TECHNOLOGY CENTER 2100

In re Application of:
Hsaio Lai Mei
Application No. 10/738,639
Filed: December 16, 2003
For: SYSTEMS AND METHODS FOR 3D MODELING AND CREATION OF A DIGITAL ASSET LIBRARY

DECISION ON REQUEST TO WITHDRAW AS ATTORNEY OR AGENT

This is a decision on the Request To Withdraw from Representation filed January 17, 2006.

A grantable request to withdraw as attorney of record should indicate thereon the present mailing addresses of the attorney(s) who is/are withdrawing from the record and of the applicant. The request for withdrawal must be signed by every attorney seeking to withdraw or contain a clear indication that one attorney is signing on behalf of another/others. A request to withdraw will not be approved unless at least 30 (thirty) days would remain between the date of approval and the later of the expiration date of a time to file a response or the expiration date of the maximum time period which can be extended under 37 C.F.R. ∋ 1. 136(a). The effective date of withdrawal being the date of decision and not the date of request. See M.P.E.P. ∋ 402.06. 37 C.F.R. ∋ 1.36 further requires that the applicant or patent owner be notified of the withdrawal of the attorney or agent.

The signer of the petition, Sanjeet K. Dutta is not appointed as an attorney or agent of record. Therefor he/she is not authorized to act on behalf of the attorneys or record, nor can he/she effect a change of address.

For the above stated reasons, the request is **DISMISSED AS MOOT**.

All future communications from the Office will be directed to the above-listed address until otherwise notified by applicant.

James R. Matthews

/JM/ Vincent N. Trans
Special Program Examiner
Technology Center 2100
Computer Architecture, Software, and
Information Security
(571) 272-3613

SPE RESPONSE FOR CERTIFICATE OF CORRECTION

Paper No.: _____

DATE : 4/6/09

TO SPE OF : ART UNIT **1642 (1600)**

SUBJECT : Request for Certificate of Correction for Appl. No.: **10/738,646** Patent No.: **7,405,454**

Attn: Brandon Fetterolf

Please respond to this request for a certificate of correction within 7 days.

FOR IFW FILES:

Please review the requested changes/corrections as shown in the **COCIN** document(s) in the IFW application image. No new matter should be introduced, nor should the scope or meaning of the claims be changed.

Please complete the response (see below) and forward the completed response to scanning using document code **COCX**.

FOR PAPER FILES:

Please review the requested changes/corrections as shown in the attached certificate of correction. Please complete this form (see below) and forward it with the file to:

Certificates of Correction Branch (C of C)
South Tower - 9A22
Palm Location 7580

Ernest C. White, LIE
Certificates of Correction Branch
703-308-9390 ext.122

Thank You For Your Assistance

The request for issuing the above-identified correction(s) is hereby:
Note your decision on the appropriate box.

X Approved	**All** changes apply.
☐ **Approved in Part**	Specify below which changes **do not** apply.
☐ **Denied**	State the reasons for denial below.

Comments: The document is OK to enter since it corrects a typographical error in the claims, but does not affect the scope or content of the claims. /BF/

SPE RESPONSE FOR CERTIFICATE OF CORRECTION

/Larry R. Helms/ SPE AU 1643

SPE RESPONSE FOR CERTIFICATE OF CORRECTION

Paper No.: _____

DATE : **4/6/09**

TO SPE OF : ART UNIT **1642 (1600)**

SUBJECT : Request for Certificate of Correction for Appl. No.: **10/738,646** Patent No.: ~~7,405,454~~ 7,465,454

Attn: Brandon Fetterolf

Please respond to this request for a certificate of correction within 7 days.

FOR IFW FILES:

Please review the requested changes/corrections as shown in the **COCIN** document(s) in the IFW application image. No new matter should be introduced, nor should the scope or meaning of the claims be changed.

Please complete the response (see below) and forward the completed response to scanning using document code **COCX**.

FOR PAPER FILES:

Please review the requested changes/corrections as shown in the attached certificate of correction. Please complete this form (see below) and forward it with the file to:

Certificates of Correction Branch (C of C)
South Tower - 9A22
Palm Location 7580

Ernest C. White, LIE
Certificates of Correction Branch
703-308-9390 ext.122

Thank You For Your Assistance

The request for issuing the above-identified correction(s) is hereby:
Note your decision on the appropriate box.

X Approved	**All** changes apply.
☐ **Approved in Part**	Specify below which changes **do not** apply.
☐ **Denied**	State the reasons for denial below.

Comments: The document is OK to enter since it corrects a typographical error in the claims, but does not affect the scope or content of the claims. /BF/

SPE RESPONSE FOR CERTIFICATE OF CORRECTION

/Larry R. Helms/ SPE AU 1643

UNITED STATES PATENT AND TRADEMARK OFFICE

COMMISSIONER FOR PATENTS
UNITED STATES PATENT AND TRADEMARK OFFICE
P.O. BOX 1450
ALEXANDRIA, VA 22313-1450
www.uspto.gov

ORRICK , HERRINGTO & SUFCLIFFEN
4 Park Plaza
Suite 1600
Irvine, CA 92614-2558

COPY MAILED
JUN 0 9 2006
OFFICE OF PETITIONS

In re Application of	:	
Hsaio Lai Sean Mei, et. al.	:	DECISION ON REQUEST
Application No. 10/738,650	:	TO WITHDRAW FROM
Filed: December 16, 2003	:	RECORD
Attorney Docket No. 45393.00004.UTL1	:	

This is a decision on the Request to Withdraw as attorney or agent of record under 37 CFR § 1.36(b), filed January 18, 2006.

The request is **NOT APPROVED**.

The request cannot be approved because no reasons for withdrawal have been provided. The Office cannot, at this time, determine whether practitioner's request is one of the mandatory or permissive reasons enumerated in 37 CFR 10.40. Any subsequent requests must include reasons for withdrawal. Please note that there is a space provided for on PTO/SB/83 (Request to Withdraw as Attorney or Agent) to supply practitioner's reasons.

All future communications from the Office will continue to be directed to the above address until otherwise notified by applicant.

Telephone inquires concerning this decision should be directed to Andrea Smith at (571) 272-3226.

Andrea Smith
Petitions Examiner
Office of Petitions

Conferee:

cc: Screampoint LLC
168 Townsend Street
San Francisco, CA 94107

UNITED STATES PATENT AND TRADEMARK OFFICE

UNITED STATES DEPARTMENT OF COMMERCE
United States Patent and Trademark Office
Address: COMMISSIONER FOR PATENTS
P.O. Box 1450
Alexandria, Virginia 22313-1450
www.uspto.gov

FISH & RICHARDSON, P.C.
PO BOX 1022
MINNEAPOLIS, MN 55440-1022

Mail Date: 04/20/2010

Applicant	: Josef Dietl	: DECISION ON REQUEST FOR
Patent Number	: 7581105	: RECALCULATION of PATENT
Issue Date	: 08/25/2009	: TERM ADJUSTMENT IN VIEW
Appliction No	: 10/738,660	: OF WYETH AND NOTICE OF INTENT TO
Filed	: 12/16/2003	: ISSUE CERTIFICATE OF CORRECTION
		:

The Request for Recalculation is **GRANTED** to the extent indicated.

The patent term adjustment has been determined to be **1177** days. The USPTO will *sua sponte* issue a certificate of correction reflecting the amount of PTA days determined by the recalculation.

Prior to the issuance of the certificate of correction, the USPTO will afford patentee an opportunity to be heard and request reconsideration. Accordingly, patentee has **one month or thirty (30) days**, whichever is longer, to file a request for reconsideration of this patent term adjustment calculation. See 35 U.S.C. 154(b)(3)(B)(ii) and 37 CFR 1.322(a)(4). No extensions of time will be granted under 37 CFR 1.136.

Patentee should use document code PET.OP if electronically filing a request for reconsideration of this patent term adjustment calculation. The patentee must also include the information required by 37 CFR 1.705(b)(2) and the fee required by 37 CFR 1.18(e). If patentee does not file a timely request for reconsideration of this patent term adjustment calculation including the information required by 37 CFR 1.705(b)(2) and the fee required by 37 CFR 1.18(e), the USPTO will issue a certificate of correction reflecting the PTA determination noted above.

Patentee should be aware that in order to preserve the right to review in the United States District Court for the District of Columbia of the USPTO patent term adjustment determination, patentee must ensure that he or she also take the steps required under 35 U.S.C. 154(b)(4)(A) in a timely manner. Nothing in the request for recalculation should be construed as providing an alternative time frame for commencing a civil action under 35 U.S.C. 154(b)(4)(A).

Any questions concerning this decision should be directed to the Office of Patent Legal Administration at 571-272-7702.

UNITED STATES PATENT AND TRADEMARK OFFICE

Commissioner for Patents
United States Patent and Trademark Office
P.O. Box 1450
Alexandria, VA 22313-1450
www.uspto.gov

NOVOZYMES NORTH AMERICA, INC.
500 FIFTH AVENUE
SUITE 1600
NEW YORK NY 10110

COPY MAILED

FEB 14 2005

OFFICE OF PETITIONS

In re Application of
Jens Sigurd Okkels
Application No. 10/738,669
Filed: December 17, 2003
Attorney Docket No. 4439.224-US

: ON PETITION

This is a decision on the petition filed January 3, 2005, under 37 CFR 1.53, requesting that the above-identified application be accorded a filing date of December 17, 2003, with Figures 1-10 described in the specification as a part of the original disclosure.

After the application was filed, the Office of Initial Patent Examination mailed a "Notice of Incomplete Application Papers" on September 3, 2004, stating that no filing date had been assigned because the application was deposited without drawings. In response, on November 2, 2004, petitioner filed, *inter alia*, Figures 1-10 and conceded that the application was mistakenly filed without the drawings but argued that the application is a continuation application, that the drawings were taken from the parent application, U.S. Serial No. 09/008,363 and that the contents of that application were incorporated by reference herein.

The "Notice" mailed September 3, 2004 advised that the filing date would be the date of receipt of the drawings or that by petition, it could be asserted that the drawings had been previously submitted or that the drawings were not necessary.

As petitioner supplied the drawings without a petition and without establishing prior receipt, thereof in the USPTO, the application was properly accorded the receipt date, November 2, 2004 as the filing date.

It is noted that the application transmittal letter identified this application as a continuation of application no. 09/008,363 and specifically incorporated by reference the disclosure of the prior application.

MPEP 201.06(c) states that:

> . . . an applicant may incorporate by reference the prior application by including, in the application-as-filed, a statement that such specifically enumerated prior application or applications are "hereby incorporated herein

by reference." The statement may appear in the specification or in the application transmittal letter. The inclusion of this incorporation by reference of the prior application(s) will permit an applicant to amend the continuing application to include any subject matter in such prior application(s), without the need for a petition. (emphasis supplied)

Obviously, in view of the incorporation by reference of the prior application, Figures 1-10, as described in the specification, are not new matter if they were a part of the disclosure of the prior application. As a complete application was present on December 17, 2003, on petition, the application as filed is entitled to a filing date of December 17, 2003.

The application will be processed and examined with the copies of Figures 1-10, supplied on January 3, 2005, as a part of the original disclosure. Of course, the primary examiner is expected to compare the drawings supplied on January 3, 2005, to the disclosure of prior application no. 09/008,363 in order to verify that the drawings are, in fact, part of the disclosure of the prior application.

Since the petition was required to accord the requested filing date and since the error occurred through no wrongdoing on the part of the USPTO, the petition fee in the amount of $400.00 is required and will be charged to deposit account no. 50-1701[1].

This matter is being referred to the Office of Initial Patent Examination for correction of the filing date to December 17, 2003, using the application papers filed on December 17, 2003, and the drawings submitted on petition on January 3, 2005, as the original disclosure, and for an indication in Office records that Figures 1-10 were present on filing.

Telephone inquiries regarding this decision should be directed to the undersigned Petitions Attorney at (571) 272-3212.

Patricia Faison-Ball

Patricia Faison-Ball
Senior Petitions Attorney
Office of Petitions

[1]Effective November 22, 2004, the petition fee has been increased from $130.00 to $400.00. See the Notice published in the Federal Register on September 21, 2004 and in the Official Gazette of the United States Patent and Trademark Office on October 12, 2004.

UNITED STATES PATENT AND TRADEMARK OFFICE

COMMISSIONER FOR PATENTS
UNITED STATES PATENT AND TRADEMARK OFFICE
P.O. BOX 1450
ALEXANDRIA, VA 22313-1450
www.uspto.gov

MAY 27 2004

In re Application of	:	
Hershey Lerner et al.	:	
Serial No. 10/738,694	:	DECISION ON PETITION
Filed: December 17, 2003	:	TO MAKE SPECIAL
For: PACKAGING MACHINE AND PROCESS	:	

Applicant's petition, filed April 19, 2004, requests that this application be rendered special for examination in that applicant is over sixty-five (65) years of age.

The petition has been reviewed and is found to be in compliance with the requirements for special status as set forth in Section 708.02(IV) of the Manual of Patent Examining Procedure (MPEP).

PETITION GRANTED.

E. Rollins-Cross, Director
Technology Center 3700

Thomas E. Fisher
Watts Hoffmann Co., LPA
1100 Superior Avenue, Suite 1750
Cleveland, OH 44114-2518

UNITED STATES PATENT AND TRADEMARK OFFICE

Commissioner for Patents
United States Patent and Trademark Office
P.O. Box 1450
Alexandria, VA 22313-1450
www.uspto.gov

LUCAS & MERCANTI, LLP
475 PARK AVENUE SOUTH
15TH FLOOR
NEW YORK NY 10016

MAILED

MAR 30 2009

OFFICE OF PETITIONS

In re Application of	:	
Paul A. Firestone	:	
Application No. 10/738,698	:	DECISION GRANTING PETITION
Filed: December 16, 2003	:	UNDER 37 CFR 1.313(c)(2)
Attorney Docket No. FIR-1-US-RE	:	

This is a decision on the petition under 37 CFR 1.313(c)(2), filed March 27, 2009, to withdraw the above-identified application from issue after payment of the issue fee.

The petition is **GRANTED**.

The above-identified application is withdrawn from issue for consideration of a submission under 37 CFR 1.114 (request for continued examination). *See* 37 CFR 1.313(c)(2).

Petitioner is advised that the issue fee paid on March 19, 2009 cannot be refunded. If, however, this application is again allowed, petitioner may request that it be applied towards the issue fee required by the new Notice of Allowance.[1]

Telephone inquiries should be directed to Terri Williams at (571) 272-2991.

This application is being referred to Technology Center AU 2612 for processing of the request for continued examination under 37 CFR 1.114 and for consideration of the concurrently filed information disclosure statement.

Terri Williams
Petitions Examiner
Office of Petitions

[1] *The request to apply the issue fee to the new Notice may be satisfied by completing and returning the new Part B – Fee(s) Transmittal Form (along with any balance due at the time of submission). Petitioner is advised that the Issue Fee Transmittal Form must be completed and timely submitted to avoid abandonment of the application.*

UNITED STATES PATENT AND TRADEMARK OFFICE

COMMISSIONER FOR PATENTS
UNITED STATES PATENT AND TRADEMARK OFFICE
P.O. BOX 1450
ALEXANDRIA, VA 22313-1450
www.uspto.gov

POPOVICH, WILES & O'CONNELL, PA
650 THIRD AVENUE SOUTH
SUITE 600
MINNEAPOLIS MN 55402

COPY MAILED

MAY 03 2007

OFFICE OF PETITIONS

In re Application of :
William Stafford Haworth :
Application No. 10/738,706 : DECISION ON PETITION
Filed: December 16, 2003 : UNDER 37 CFR 1.78(a)(3)
Attorney Docket No. CAC1001US :

This is a decision on the PETITION TO ACCEPT PRIORITY CLAIMS UNDER 35 U.S.C. §§ 119 AND 120, filed April 21, 2006, to accept an unintentionally delayed claim under 35 U.S.C. §§ 120 and 365(c) for the benefit of priority to prior-filed International Application No. PCT/GB02/02738, set forth in the concurrently filed amendment. This petition was recently forwarded to the undersigned for consideration.

On petition, petitioner acknowledges that on filing of the application the priority claim for the subject International Application and foreign application No. 0115360.0 were only listed (on the declaration) in the section for priority claims under 35 U.S.C. § 119. Nonetheless, petitioner argues that no petition under 1.78 is necessary to enter the claim for priority to the International Application under 35 U.S.C. § 120.

With respect to this argument, it is noted that no claim for priority under 35 U.S.C. §§ 120 and 365(C) to the subject International Application, or any other application, was made on filing or within the time period set forth in 37 CFR 1.78(a)(2)(ii) in this application. Furthermore, the reference required by 35 U.S.C. § 120 and paragraph (a)(2) of 37 CFR 1.78 was first presented after the time period provided by paragraph (a)(2)(ii) of § 1.78. The time periods for submitting such claims are not extendable. Accordingly, as stated in 37 CFR 1.78(a)(2) and (3), to prevent waiver of any benefit under 35 U.S.C. §§ 120 and 365(c) to the prior-filed International application, a petition under 37 CFR 1.78(a)(3) is required.

With respect to the claim for priority under 35 U.S.C. 119 to the foreign application, it is noted that the claim was timely submitted.

Consideration now turns to the merits of the petition.

The petition is **GRANTED**.

A petition for acceptance of a claim for late priority under 37 CFR § 1.78(a)(3) is only applicable to those applications filed on or after November 29, 2000. Further, the petition is appropriate only after the

expiration of the period specified in 37 CFR §§ 1.78(a)(2)(ii). In addition, the petition under 37 CFR § 1.78(a)(3) must be accompanied by:

(1) the reference required by 35 U.S.C. § 120 and 37 CFR § 1.78(a)(2)(i) of the prior-filed application, unless previously submitted;
(2) the surcharge set forth in § 1.17(t); and
(3) a statement that the entire delay between the date the claim was due under 37 CFR §§ 1.78(a)(2)(ii) and the date the claim was filed was unintentional. The Director may require additional where there is a question whether the delay was unintentional.

A reference to the prior-filed International application has been included in an amendment to the first sentence of the specification following the title, as required by 37 CFR 1.78(a)(2)(iii).

All of the above requirements having been satisfied, the late claim for benefit of priority to the prior-filed applications under 35 U.S.C. § 120 is accepted as being unintentionally delayed.

The granting of the petition to accept the delayed benefit claim to the prior-filed applications under 37 CFR §§ 1.78(a)(3) should not be construed as meaning that this application is entitled to the benefit of the filing date of the prior-filed applications. In order for this application to be entitled to the benefit of the prior-filed applications, all other requirements under 35 U.S.C. §§120 and 365(c) and 1.78(a)(1) and (a)(2) must be met. Similarly, the fact that the corrected Filing Receipt accompanying this decision on petition includes the prior-filed applications should not be construed as meaning that applicant is entitled to the claim for benefit of priority to the prior-filed applications noted thereon. Accordingly, the examiner will, in due course, consider this benefit claim and determine whether the application is entitled to the benefit of the earlier filing date.

A corrected Filing Receipt, which includes the priority claim to the prior-filed application, accompanies this decision on petition.

Any questions concerning this matter may be directed to the undersigned at (571) 272-3219. All other inquiries concerning either the examination procedures or status of the application should be directed to the Technology Center.

This application is being referred to Technology Center Art Unit 1771 for consideration by the examiner of the claim for benefit of priority under 35 U.S.C. §§ 120 and 365(c) to the prior-filed International application.

Nancy Johnson
Senior Petitions Attorney
Office of Petitions

ATTACHMENT : Corrected Filing Receipt

UNITED STATES PATENT AND TRADEMARK OFFICE

UNITED STATES DEPARTMENT OF COMMERCE
United States Patent and Trademark Office
Address: COMMISSIONER FOR PATENTS
P.O. Box 1450
Alexandria, Virginia 22313-1450
www.uspto.gov

APPL NO.	FILING OR 371(c) DATE	ART UNIT	FIL FEE REC'D	ATTY.DOCKET NO	TOT CLMS	IND CLMS
10/738,706	12/16/2003	1771	394	CAC1001US	21	3

CONFIRMATION NO. 8270

9561
POPOVICH, WILES & O'CONNELL, PA
650 THIRD AVENUE SOUTH
SUITE 600
MINNEAPOLIS, MN 55402

CORRECTED FILING RECEIPT

OC000000023649490

Date Mailed: 05/02/2007

Receipt is acknowledged of this regular Patent Application. It will be considered in its order and you will be notified as to the results of the examination. Be sure to provide the U.S. APPLICATION NUMBER, FILING DATE, NAME OF APPLICANT, and TITLE OF INVENTION when inquiring about this application. Fees transmitted by check or draft are subject to collection. Please verify the accuracy of the data presented on this receipt. **If an error is noted on this Filing Receipt, please mail to the Commissioner for Patents P.O. Box 1450 Alexandria Va 22313-1450. Please provide a copy of this Filing Receipt with the changes noted thereon. If you received a "Notice to File Missing Parts" for this application, please submit any corrections to this Filing Receipt with your reply to the Notice. When the USPTO processes the reply to the Notice, the USPTO will generate another Filing Receipt incorporating the requested corrections (if appropriate).**

Applicant(s)

William Stafford Haworth, Biggar, UNITED KINGDOM;

Power of Attorney:

Cecilia Jaisle–28824
Terry Wiles–29989
Thomas Popovich–30099
Patrick O'Connell–33984
Miriam Simmons–34727

Domestic Priority data as claimed by applicant

This application is a CON of PCT/GB02/02738 06/14/2002

Foreign Applications

UNITED KINGDOM GB 0115360.0 06/22/2001

If Required, Foreign Filing License Granted: 03/26/2004

The country code and number of your priority application, to be used for filing abroad under the Paris Convention, is US10/738,706

Projected Publication Date: Not Applicable

Non-Publication Request: No

Early Publication Request: No

**** SMALL ENTITY ****

Title

Bicomponent fibers and textiles made therefrom

Preliminary Class

442

PROTECTING YOUR INVENTION OUTSIDE THE UNITED STATES

Since the rights granted by a U.S. patent extend only throughout the territory of the United States and have no effect in a foreign country, an inventor who wishes patent protection in another country must apply for a patent in a specific country or in regional patent offices. Applicants may wish to consider the filing of an international application under the Patent Cooperation Treaty (PCT). An international (PCT) application generally has the same effect as a regular national patent application in each PCT-member country. The PCT process **simplifies** the filing of patent applications on the same invention in member countries, but **does not result** in a grant of "an international patent" and does not eliminate the need of applicants to file additional documents and fees in countries where patent protection is desired.

Almost every country has its own patent law, and a person desiring a patent in a particular country must make an application for patent in that country in accordance with its particular laws. Since the laws of many countries differ in various respects from the patent law of the United States, applicants are advised to seek guidance from specific foreign countries to ensure that patent rights are not lost prematurely.

Applicants also are advised that in the case of inventions made in the United States, the Director of the USPTO must issue a license before applicants can apply for a patent in a foreign country. The filing of a U.S. patent application serves as a request for a foreign filing license. The application's filing receipt contains further information and guidance as to the status of applicant's license for foreign filing.

Applicants may wish to consult the USPTO booklet, "General Information Concerning Patents" (specifically, the section entitled "Treaties and Foreign Patents") for more information on timeframes and deadlines for filing foreign patent applications. The guide is available either by contacting the USPTO Contact Center at 800-786-9199, or it can be viewed on the USPTO website at http://www.uspto.gov/web/offices/pac/doc/general/index.html.

For information on preventing theft of your intellectual property (patents, trademarks and copyrights), you may wish to consult the U.S. Government website, http://www.stopfakes.gov. Part of a Department of Commerce initiative, this website includes self-help "toolkits" giving innovators guidance on how to protect intellectual property in specific countries such as China, Korea and Mexico. For questions regarding patent enforcement issues, applicants may call the U.S. Government hotline at 1-866-999-HALT (1-866-999-4158).

LICENSE FOR FOREIGN FILING UNDER
Title 35, United States Code, Section 184
Title 37, Code of Federal Regulations, 5.11 & 5.15

GRANTED

The applicant has been granted a license under 35 U.S.C. 184, if the phrase "IF REQUIRED, FOREIGN FILING LICENSE GRANTED" followed by a date appears on this form. Such licenses are issued in all applications where

the conditions for issuance of a license have been met, regardless of whether or not a license may be required as set forth in 37 CFR 5.15. The scope and limitations of this license are set forth in 37 CFR 5.15(a) unless an earlier license has been issued under 37 CFR 5.15(b). The license is subject to revocation upon written notification. The date indicated is the effective date of the license, unless an earlier license of similar scope has been granted under 37 CFR 5.13 or 5.14.

This license is to be retained by the licensee and may be used at any time on or after the effective date thereof unless it is revoked. This license is automatically transferred to any related applications(s) filed under 37 CFR 1.53(d). This license is not retroactive.

The grant of a license does not in any way lessen the responsibility of a licensee for the security of the subject matter as imposed by any Government contract or the provisions of existing laws relating to espionage and the national security or the export of technical data. Licensees should apprise themselves of current regulations especially with respect to certain countries, of other agencies, particularly the Office of Defense Trade Controls, Department of State (with respect to Arms, Munitions and Implements of War (22 CFR 121-128)); the Bureau of Industry and Security, Department of Commerce (15 CFR parts 730-774); the Office of Foreign Assets Control, Department of Treasury (31 CFR Parts 500+) and the Department of Energy.

NOT GRANTED

No license under 35 U.S.C. 184 has been granted at this time, if the phrase "IF REQUIRED, FOREIGN FILING LICENSE GRANTED" DOES NOT appear on this form. Applicant may still petition for a license under 37 CFR 5.12, if a license is desired before the expiration of 6 months from the filing date of the application. If 6 months has lapsed from the filing date of this application and the licensee has not received any indication of a secrecy order under 35 U.S.C. 181, the licensee may foreign file the application pursuant to 37 CFR 5.15(b).

UNITED STATES PATENT AND TRADEMARK OFFICE

Commissioner for Patents
United States Patent and Trademark Office
P.O. Box 1450
Alexandria, VA 22313-1450
www.uspto.gov

Klarquist Sparkman, LLP
121 S.W. Salmon Street
Suite 1600
Portland, OR 97204

COPY MAILED

SEP 10 2004

OFFICE OF PETITIONS

In re Application of :
John Wang, et. al. :
Application No. 10/738,715 : NOTICE
Filed: December 16, 2003 :
Attorney Docket No. 6565-67550-01 :

This is a notice regarding your request for acceptance of a fee deficiency submission under 37 CFR 1.28. On September 1, 1998, the Court of Appeals for the Federal Circuit held that 37 CFR 1.28(c) is the sole provision governing the time for correction of the erroneous payment of the issue fee as a small entity. **See DH Technology v. Synergystex International, Inc. 154 F.3d 1333, 47 USPQ2d 1865 (Fed. Cir. Sept. 1, 1998).**

The Office no longer investigates or rejects original or reissue applications under 37 CFR 1.56. **1098 Off. Gaz. Pat. Office 502 (January 3, 1989)**. Therefore, nothing in this Notice is intended to imply that an investigation was done.

Your fee deficiency submission under 37 CFR 1.28 is hereby **ACCEPTED**.

This file is being referred to Technology Center Art Unit 1775 for examination in due course.

Inquiries related to this communication should be directed to the undersigned at (703) 308-6711.

Andrea Smith
Petitions Examiner
Office of Petitions
Office of the Deputy Commissioner
for Patent Examination Policy

UNITED STATES PATENT AND TRADEMARK OFFICE

Commissioner for Patents
United States Patent and Trademark Office
P.O. Box 1450
Alexandria, VA 22313-1450
www.uspto.gov

DIEHL SERVILLA, LLC
77 BRANT AVENUE, SUITE 210
CLARK, NJ 07066

COPY MAILED

MAY 21 2008

OFFICE OF PETITIONS

In re Application of :
WARRELL, Raymond P. Jr. :
Application No. 10/738,717 :
Filed: December 16, 2003 :
Attorney Docket No. **12475/50802** :

DECISION ON PETITION
UNDER 37 CFR 1.137(b)

This is a decision on the petition under the unintentional provisions of 37 CFR 1.137(b), filed July 18, 2007, to revive the above-identified application.

The petition is **GRANTED.**

The two-month period for filing an appeal brief under 37 CFR 41.37 (accompanied by the fee required by 37 CFR 41.20(b)(2)), runs from the date of this decision.

This application became abandoned for failure to timely file a reply within the meaning of 37 CFR 1.113 to the final Office action of December 14, 2006. The proposed reply required for consideration of a petition to revive must be a Notice of Appeal (and appeal fee required by 37 CFR 41.20(b)(2)), an amendment that *prima facie* places the application in condition for allowance, a Request for Continued Examination (RCE) and submission (37 CFR 1.114), or the filing of a continuing application under 37 CFR 1.53(b). See MPEP 711.03(c)(III)(A)(2). A three (3) month extension of time pursuant to the provisions of 37 CFR 1.136(a) was obtained. Accordingly, the date of abandonment of this application is June 14, 2007.

The petition satisfies the requirements of 37 CFR 1.137(b) in that petitioner has supplied (1) the reply in the form of a Notice of Appeal and fee; (2) the petition fee of $750; and (3) a proper statement of unintentional delay.

Telephone inquiries concerning this decision should be directed to Monica A. Graves at (571) 272-7253.

This application is being referred to Technology Center AU 1635 to await the filing of an appeal brief or for such other appropriate reply as may be submitted to continue prosecution of the application.

Sherry D. Brinkley
Petitions Examiner
Office of Petitions

UNITED STATES PATENT AND TRADEMARK OFFICE

UNITED STATES DEPARTMENT OF COMMERCE
United States Patent and Trademark Office
Address: COMMISSIONER FOR PATENTS
P.O. Box 1450
Alexandria, Virginia 22313-1450
www.uspto.gov

APPLICATION NO.	FILING DATE	FIRST NAMED INVENTOR	ATTORNEY DOCKET NO.	CONFIRMATION NO.
10/738,726	12/17/2003	P. Edward Clugston JR.	31142-2	7770

30565 7590 07/09/2007

WOODARD, EMHARDT, MORIARTY, MCNETT & HENRY LLP
111 MONUMENT CIRCLE, SUITE 3700
INDIANAPOLIS, IN 46204-5137

EXAMINER	
PYO, KEVIN K	

ART UNIT	PAPER NUMBER
2878	

MAIL DATE	DELIVERY MODE
07/09/2007	PAPER

Please find below and/or attached an Office communication concerning this application or proceeding.

The time period for reply, if any, is set in the attached communication.

UNITED STATES PATENT AND TRADEMARK OFFICE

Commissioner for Patents
United States Patent and Trademark Office
P.O. Box 1450
Alexandria, VA 22313-1450
www.uspto.gov

In re Application of	:	
P. Edward Clugston, Jr.	:	DECISION ON PETITION
Serial No.: 10/738726	:	UNDER 37 CFR 1.181
Filed: December 17, 2003	:	
For: SOLAR SENSOR INCLUDING REFLECTIVE ELEMENT TO TRANSFORM THE ANGULAR RESPONSE	:	

The request filed on April 19, 2006, to withdraw the finality of the office action of February 21, 2006 is treated as a Petition under 37CFR 1.181.

The petition if **granted**.

The Petition is granted for the reasons as stated in the applicant's request filed on April 19, 2006. The finality of the Office action dated February 21, 2006 is withdrawn and prosecution is reopened.

This application is being forwarded to the examiner for appropriate action consistent with this decision. The finality of the Office action mailed on February 21, 2006 will be withdrawn.

Georgia Y. Epps
Supervisory Patent Examiner, Art Unit 2878

Troy J. Cole
Woodard, Emhardt, Moriarty, McNett & Henry LLP
111 Monument Circle, Suite 3700
Indianapolis, IN 46204-5137

UNITED STATES PATENT AND TRADEMARK OFFICE

Commissioner for Patents
United States Patent and Trademark Office
P.O. Box 1450
Alexandria, VA 22313-1450
www.uspto.gov

SHERIDAN ROSS PC
1560 BROADWAY
SUITE 1200
DENVER, CO 80202

COPY MAILED

MAY 14 2007

OFFICE OF PETITIONS

In re Application of :
William T. Ball :
Application No. 10/738,765 : ON PETITION
Filed: December 17, 2003 :
Attorney Docket No. 5564-153B :

This is a decision on the petition to withdraw the holding of abandonment under 37 CFR 1.181, filed April 6, 2007.

The petition under 37 CFR 1.181(a) to withdraw the holding of abandonment is **granted**.

This application was held abandoned on June 20, 2006, after it was believed that an appeal brief was not filed in response to the Notice of Appeal filed April 19, 2006. A Notice of Abandonment was mailed on March 16, 2007.

The instant petition maintains that an appeal brief was timely filed. A copy of the appeal brief and the Office date-stamp postcard whereby the Office acknowledged having received the appeal brief on May 26, 2006, accompanied the petition. The abandonment is being withdrawn on the basis of the Office date-stamped postcard receipt.

Based on the aforementioned, it appears that the application was improperly held abandoned as a proper response was received prior to expiration of the period for reply. The holding of abandonment is withdrawn, accordingly.

The application file is being forwarded to Technology Center 3700, GAU 3751 for further processing.

Questions regarding this decision may be directed to the undersigned at (571) 272-3222.

Kenya A. McLaughlin
Petitions Attorney
Office of Petitions

UNITED STATES PATENT AND TRADEMARK OFFICE

Commissioner for Patents
United States Patent and Trademark Office
P.O. Box 1450
Alexandria, VA 22313-1450
www.uspto.gov

Timothy J. Zarley
Zarley Law Firm
400 Locust Street, Suite 200
Des Moines, Iowa 50309

MAILED

SEP 06 2005

Director's Office
Group 3700

In re Application of : DECISION ON PETITION
William T. Ball : TO MAKE SPECIAL
Serial No. : 10/738,772 : (INFRINGEMENT)
Filed : December 17, 2003 :
For : **OVERFLOW ASSEMBLY FOR BATHTUBS AND THE LIKE**

This is a decision on the petition under C.F.R. § 1.102(d) filed January 21, 2005, to make the above-identified application special. The petition requests that the above-identified application be made special under the procedure set forth in M.P.E.P § 708.02, item II: Infringement.

MPEP 708.02 states that a Petition to Make Special based on Infringement must have the following: (1) the appropriate petition fee under 37 CFR 1.17(h); (2) a statement by the assignee, applicant, or attorney alleging: (A) that there is an infringing device or product actually on the market; (B) that a rigid comparison of the alleged infringing device or product with the claims of the application has been made, and that, in his or her opinion, some of the claims are unquestionably infringed; and (C) that he or she has made a careful and thorough search of the prior art, or has good knowledge of the prior art, and has sent a copy of the references deemed most closely related to the subject matter encompassed by the claims.

The petition filed January 21, 2005, includes all of the requirements above and, therefore, the petition is **GRANTED**.

The examiner is directed (1) to make an interference search for possible interfering applications; (2) to promptly examine this application out of turn; and (3) if any interfering application is discovered, to examine such application simultaneously and state in the first official letter of such application that it is being taken out of turn because of a possible interference.

Petitioner is advised that this application will continue to be special, throughout its entire prosecution and pendency, including interference and appeal, if any, only if petitioner makes a prompt *bona fide* effort, in response to each Office action, to place the application in condition for allowance, even if it is necessary to conduct an interview with the examiner to accomplish this purpose.

Richard A. Bertsch, Director
Technology Center 3700
Phone: (571) 272-3750
rt/ 9/1/05

PTO/SB/66 (03-09)
Approved for use through 03/31/2012. OMB 0651-0016
U.S. Patent and Trademark Office: U.S. DEPARTMENT OF COMMERCE
Under the Paperwork Reduction Act of 1995, no persons are required to respond to a collection of information unless it displays valid OMB control number.

PETITION TO ACCEPT UNINTENTIONALLY DELAYED PAYMENT OF MAINTENANCE FEE IN AN EXPIRED PATENT (37 CFR 1.378(c))

Patent Number	Issue Date (YYYY-MM-DD)	Application Number	Filing Date (YYYY-MM-DD)	Docket Number (if applicable)
6841397	2005-01-11	10738804	2003-12-17	P11412D

CAUTION: Maintenance fee (and surcharge, if any) payment must correctly identify: (1) the patent number and (2) the application number of the actual U.S. application leading to issuance of that patent to ensure the fee(s) is/are associated with the correct patent. 37 CFR 1.366(c) and (d).

SMALL ENTITY

☐ Patentee claims, or has previously claimed, small entity status. See 37 CFR 1.27.

LOSS OF ENTITLEMENT TO SMALL ENTITY STATUS

☐ Patentee is no longer entitled to small entity status. See 37 CFR 1.27(g)

NOT Small Entity

	Fee	Code
◉	3 ½ year	(1551)
○	7 ½ year	(1552)
○	11 ½ year	(1553)

Small Entity

	Fee	Code
○	3 ½ year	(2551)
○	7 ½ year	(2552)
○	11 ½ year	(2553)

SURCHARGE

The surcharge required by 37 CFR 1.20(i)(2) (Fee Code 1558) must be paid as a condition of accepting unintentionally delayed payment of the maintenance fee.

MAINTENANCE FEE (37 CFR 1.20(e)-(g))

The appropriate maintenance fee must be submitted with this petition.

STATEMENT

THE UNDERSIGNED CERTIFIES THAT THE DELAY IN PAYMENT OF THE MAINTENANCE FEE TO THIS PATENT WAS UNINTENTIONAL

PETITIONER(S) REQUEST THAT THE DELAYED PAYMENT OF THE MAINTENANCE FEE BE ACCEPTED AND THE PATENT REINSTATED

THIS PORTION MUST BE COMPLETED BY THE SIGNATORY OR SIGNATORIES

37 CFR 1.378(d) states: "Any petition under this section must be signed by an attorney or agent registered to practice before the Patent and Trademark Office, or by the patentee, the assignee, or other party in interest."

I certify, in accordance with 37 CFR 1.4(d)(4) that I am

◉ An attorney or agent registered to practice before the Patent and Trademark Office

○ A sole patentee

○ A joint patentee; I certify that I am authorized to sign this submission on behalf of all the other patentees.

○ A joint patentee; all of whom are signing this e-petition

○ The assignee of record of the entire interest

Patent Practitioner			
A signature of the applicant or representative is required in accordance with 37 CFR 1.33 and 10.18. Please see 37 CFR 1.4(d) for the form of the signature			
Signature	/Jeffrey S. Draeger/	Date (YYYY-MM-DD)	2009-11-02
Name	/Jeffrey S. Draeger/	Registration Number	41000

This collection of information is required by 37 CFR 1.378(c). The information is required to obtain or retain a benefit by the public which is to file (and by the USPTO to process) an application. Confidentiality is governed by 35 U.S.C. 122 and 37 CFR 1.11 and 1.14. This collection is estimated to take 1 hour to complete, including gathering, preparing, and submitting the completed application form to the USPTO. Time will vary depending upon the individual case. Any comments on the amount of time you require to complete this form and/ or suggestions for reducing this burden, should be sent to the Chief Information Officer, U.S. Patent and Trademark Office, U.S. Department of Commerce, P.O. Box 1450, Alexandria, VA 22313-1450. DO NOT SEND FEES OR COMPLETED FORMS TO THIS ADDRESS. **This form can only be used when in conjunction with EFS-Web. If this form is mailed to the USPTO, it may cause delays in reinstating the patent.**

Privacy Act Statement

The Privacy Act of 1974 (P.L. 93-579) requires that you be given certain information in connection with your submission of the attached form related to a patent application or patent. Accordingly, pursuant to the requirements of the Act, please be advised that: (1) the general authority for the collection of this information is 35 U.S.C. 2(b)(2); (2) furnishing of the information solicited is voluntary; and (3) the principal purpose for which the information is used by the U.S. Patent and Trademark Office is to process and/or examine your submission related to a patent application or patent. If you do not furnish the requested information, the U.S. Patent and Trademark Office may not be able to process and/or examine your submission, which may result in termination of proceedings or abandonment of the application or expiration of the patent.

The information provided by you in this form will be subject to the following routine uses:

1. The information on this form will be treated confidentially to the extent allowed under the Freedom of Information Act (5 U.S.C. 552) and the Privacy Act (5 U.S.C. 552a). Records from this system of records may be disclosed to the Department of Justice to determine whether the Freedom of Information Act requires disclosure of these records.

2. A record from this system of records may be disclosed, as a routine use, in the course of presenting evidence to a court, magistrate, or administrative tribunal, including disclosures to opposing counsel in the course of settlement negotiations.

3. A record in this system of records may be disclosed, as a routine use, to a Member of Congress submitting a request involving an individual, to whom the record pertains, when the individual has requested assistance from the Member with respect to the subject matter of the record.

4. A record in this system of records may be disclosed, as a routine use, to a contractor of the Agency having need for the information in order to perform a contract. Recipients of information shall be required to comply with the requirements of the Privacy Act of 1974, as amended, pursuant to 5 U.S.C. 552a(m).

5. A record related to an International Application filed under the Patent Cooperation Treaty in this system of records may be disclosed, as a routine use, to the International Bureau of the World Intellectual Property Organization, pursuant to the Patent Cooperation Treaty.

6. A record in this system of records may be disclosed, as a routine use, to another federal agency for purposes of National Security review (35 U.S.C. 181) and for review pursuant to the Atomic Energy Act (42 U.S.C. 218(c)).

7. A record from this system of records may be disclosed, as a routine use, to the Administrator, General Services, or his/her designee, during an inspection of records conducted by GSA as part of that agency's responsibility to recommend improvements in records management practices and programs, under authority of 44 U.S.C. 2904 and 2906. Such disclosure shall be made in accordance with the GSA regulations governing inspection of records for this purpose, and any other relevant (i.e., GSA or Commerce) directive. Such disclosure shall not be used to make determinations about individuals.

8. A record from this system of records may be disclosed, as a routine use, to the public after either publication of the application pursuant to 35 U.S.C. 122(b) or issuance of a patent pursuant to 35 U.S.C. 151. Further, a record may be disclosed, subject to the limitations of 37 CFR 1.14, as a routine use, to the public if the record was filed in an application which became abandoned or in which the proceedings were terminated and which application is referenced by either a published application, an application open to public inspections or an issued patent.

9. A record from this system of records may be disclosed, as a routine use, to a Federal, State, or local law enforcement agency, if the USPTO becomes aware of a violation or potential violation of law or regulation.

UNITED STATES PATENT AND TRADEMARK OFFICE

Commissioner for Patents
United States Patent and Trademark Office
P.O. Box 1450
Alexandria, VA 22313-1450
www.uspto.gov

In re Patent No. 6841397
Issue Date: January 11,2005
Application No. 10738804
Filed: December 17,2003
Attorney Docket No. ITO.0527D1US (P11412D)

:
:DECISION GRANTING PETITION
:UNDER 37 CFR 1.378(c)
:

This is a decision on the electronic petition, filed November 3,2009 ,under 37 CFR 1.378(c) to accept the unintentionally delayed payment of the 3.5 year maintenance fee for the above-identified patent.

The petition is **GRANTED**.

The maintenance fee is accepted, and the above-identified patent reinstated as of November 3,2009 . This decision also constitutes notice that the fee has been accepted. An electronic copy of the petition and this decision has been created as an entry in the Image File Wrapper. Nevertheless, petitioner should print and retain an independent copy.

Telephone inquiries related to this electronic decision should be directed to the Electronic Business Center at 1-866-217-9197.

UNITED STATES PATENT AND TRADEMARK OFFICE

COMMISSIONER FOR PATENTS
UNITED STATES PATENT AND TRADEMARK OFFICE
P.O. BOX 1450
ALEXANDRIA, VA 22313-1450
www.uspto.gov

Paper No.

Brinks Hofer Gilson & Lione
P.O. Box 10395
Chicago IL 60610

COPY MAILED

SEP 13 2007

OFFICE OF PETITIONS

In re Patent No. 7,199,789	:	
Endo et al.	:	DECISION ON REQUEST
Issue Date: April 3, 2007	:	FOR
Application No. 10/738,823	:	RECONSIDERATION OF
Filed: December 17, 2003	:	PATENT TERM ADJUSTMENT
Title: INPUT APPARATUS HAVING ELECTROSTATIC SENSOR	:	

This is a decision on the "REQUEST FOR RECONSIDERATION OF PATENT TERM ADJUSTMENT," filed May 9, 2007. Patentees request that the patent term adjustment indicated in the patent be corrected from five hundred eleven (511) days to six hundred eighteen (618) days.

The request for reconsideration of the patent term adjustment indicated in the patent is **DISMISSED**.

Patentees are given **TWO (2) MONTHS** from the mailing date of this decision to respond. No extensions of time will be granted under § 1.136.

On April 3, 2007, the above-identified application matured into U.S. Patent No. 7,199,789. The present request for reconsideration filed May 9, 2007 was timely filed within 2 months of the date the patent issued. See § 1.705(d). The Patent issued with a Patent Term Adjustment of 511 days. Patentees request correction of the patent term adjustment to increase the patent term adjustment to 618 days on the basis that the patent issued 3 years and 107 days after the date on which the application was filed.

It is agreed that the present patent issued 3 years and 107 days after its filing date.

However, if an application is entitled to an adjustment under 35 U.S.C. § 154(b)(1)(B), the entire period during which the application was pending (except for periods excluded under 35 U.S.C. § 154(b)(1)(B)(i)-(iii)), and not just the period beginning three years after the actual filing date of the application, is the period of delay under 35 U.S.C. § 154(b)(1)(B) in determining whether periods of delay overlap under 35 U.S.C. § 154(b)(2)(A). Thus, any days of delay for Office issuance of the patent more than 3 years after the filing date of the application that overlap with the days of patent term adjustment accorded prior to the issuance of the patent will not result in any additional patent term adjustment. See 35 U.S.C. §§ 154(b)(1)(B), 154(b)(2)(A), and 37 CFR § 1.703(f). See also Revision of Patent Term Extension and Patent Term Adjustment Provisions; Final Rule, 69 Fed. Reg. 21704 (April 22, 2004). In this instance, the period of delay of 511 days attributable to grounds specified in 37 C.F.R. **§ 1.702(a)(1)** overlaps with the 107 days attributable to the delay in the issuance of the patent. Thus, the period of adjustment cannot exceed the actual number of days of delay of 511 days.

In view thereof, the patent properly issued with a patent term adjustment of 511 days.

The Office acknowledges submission of the $200.00 fee set forth in 37 CFR 1.18(e), which has been charged to Petitioner's Deposit Account, as authorized in the petition. No additional fees are required.

Telephone inquiries specific to this matter should be directed to Paul Shanoski, Senior Attorney, at (571) 272-3225.

Nancy Johnson
Senior Petitions Attorney
Office of Petitions

UNITED STATES PATENT AND TRADEMARK OFFICE

Commissioner for Patents
United States Patent and Trademark Office
P.O. Box 1450
Alexandria, VA 22313-1450
www.uspto.gov

Paper No.

MINTZ, LEVIN, COHN, FERRIS, GLOVSKY AND POPEO, P.C
ONE FINANCIAL CENTER
BOSTON MA 02111

MAILED

MAR 01 2010

OFFICE OF PETITIONS

In re Application of :
Nelson et al. :
Application No. 10/738,862 : ON APPLICATION FOR
Filed: December 16, 2003 : PATENT TERM ADJUSTMENT
Atty Docket No. :
16534-522C01US :

This is in response to the "REQUEST FOR RECONSIDERATION OF PATENT TERM ADJUSTMENT UNDER 37 C.F.R. 1.705(b)," filed on November 10, 2009. Applicants submit that the correct patent term adjustment to be indicated on the patent is 525 days, not 229 days as calculated by the Office as of the mailing of the initial determination of patent term adjustment. Applicants request this correction solely on the basis that the Office will take in excess of three years to issue this patent.

The instant application for patent term adjustment requests reconsideration of the patent term adjustment as it relates to the Office's failure to issue the patent within 3 years of the filing date, the application for patent term adjustment under 37 CFR 1.705(b) is **DISMISSED as PREMATURE**.

Knowledge of the actual date the patent issues is required to calculate the amount, if any, of additional patent term patentee is entitled to for Office failure to issue the patent within 3 years. See § 1.702(b). (This is true even where a request for continued examination (RCE) was filed). The computer will not undertake the § 1.702(b) calculation until the actual date of issuance of the patent has been determined. Likewise, the computer will not calculate any further Office delay under § 1.702(a)(4) or applicant delay under § 1.704(c)(10) until the actual date of issuance of the patent has been determined. As such, the Office can not make a determination on the correctness of the patent term adjustment until the patent has issued.

Requesting reconsideration of the patent term adjustment to be indicated on the patent under 37 CFR 1.705(b) based on the initial determination of patent term adjustment and a projected issuance date of the patent (or even the filing date of the request for continued examination) is premature. Accordingly, it is appropriate to dismiss as premature such a request.

Rather than file an application for patent term adjustment under 37 CFR 1.705(b) contesting the 37 CFR 1.702(b) calculation at the time of the mailing of the notice of allowance, applicants are advised that they may wait until the time of the issuance of the patent and file a request for reconsideration of the patent term adjustment pursuant to 37 CFR 1.705(d). As the USPTO does not calculate the amount of time earned pursuant to 37 CFR 1.702(b) until the time of the issuance of the patent, the Office will consider any request for reconsideration of the patent term adjustment due to an error in the calculation of 37 CFR 1.702(b) to be timely if the request for reconsideration is filed within two months of the issuance of the patent. However, as to all other bases for contesting the initial determination of patent term adjustment received with the notice of allowance, applicant must timely file an application for patent term adjustment prior to the payment of the issue fee[1].

The Office acknowledges submission of the $200.00 fee set forth in 37 CFR 1.18(e) for consideration of the application for patent term adjustment under 37 CFR 1.705(b).

Applicants state that the patent is subject to a terminal disclaimer.

Any request for reconsideration of the patent term adjustment indicated on the patent must be timely filed within 2 months

---

[1] For example, if applicant disputes both the calculation of patent term adjustment under 37 CFR 1.702(a)(1) for Office failure to mail a first Office action or notice of allowance not later than fourteen months after the date on which the application was filed and under 37 CFR 1.702(b) for Office failure to issue a patent within three years of the actual filing date of the application, then applicant must still timely file an application for patent term adjustment prior to the payment of the issue fee to contest the calculation of Office delay in issuing a first Office action or notice of allowance. See 37 CFR 1.705(b) and 35 U.S.C. 154(b)(3)(B). A dispute as to the calculation of the §1.702(a)(1) period raised on request for reconsideration of patent term adjustment under 37 CFR 1.705(d) will be dismissed as untimely filed.

after issuance pursuant to 37 CFR 1.705(d) and must include payment of the required fee under 37 CFR 1.18(e).

The Office of Data Management has been advised of this decision. This application is being referred to the Office of Data Management for issuance of the patent.

Telephone inquiries specific to this decision should be directed to Senior Petitions Attorney Douglas I. Wood at (571) 272-3231.

Anthony Knight
Supervisor
Office of Petitions

UNITED STATES PATENT AND TRADEMARK OFFICE

COMMISSIONER FOR PATENTS
UNITED STATES PATENT AND TRADEMARK OFFICE
P.O. BOX 1450
ALEXANDRIA, VA 22313-1450
WWW.USPTO.GOV

Paper No. None

PERKINS COIE LLP
P.O. BOX 2168
MENLO PARK CA 94026

COPY MAILED

JUL 17 2006

OFFICE OF PETITIONS

In re Application of :
Ci-Ling Pan et al. :
Application No. 10/738,893 :
Filing Date: December 16, 2003 :
Attorney Docket Number: 59629-8014.US01 :
Title: MULTI-WAVELENGTH EXTERNAL-CAVITY LASER WITH DIGITAL AND MODE-HOPE-FREE FINE TUNING MECHANISMS :

DECISION ON PETITION UNDER 37 C.F.R. § 1.137(B)

This is a decision on the petition under 37 CFR §1.137(b)[1], filed April 3, 2006, to revive the above-identified application.

The above-identified application became abandoned for failure to reply in a timely manner to the non-final Office action, mailed May 27, 2005, which set a shortened statutory period for reply of three (3) months. No response was received, and no extensions of time under the provisions of 37 C.F.R. §1.136(a) were requested. Accordingly, the above-identified application became abandoned on

1 A grantable petition pursuant to 37 CFR 1.137(b) must be accompanied by:
(1) The reply required to the outstanding Office action or notice, unless previously filed;
(2) The petition fee as set forth in § 1.17(m);
(3) A statement that the entire delay in filing the required reply from the due date for the reply until the filing of a grantable petition pursuant to this paragraph was unintentional. The Commissioner may require additional information where there is a question whether the delay was unintentional, and;
(4) Any terminal disclaimer (and fee as set forth in § 1.20(d)) required pursuant to paragraph (d) of this section.

August 28, 2005. A notice of abandonment was mailed on February 23, 2006.

With the present petition, Petitioner has submitted the petition fee, the proper statement of unintentional delay, and an amendment. A terminal disclaimer is not required. Petitioner has met all requirements for a grantable petition under 37 C.F.R. §1.137(b). As such, the petition is **GRANTED**.

The Technology Center will be notified of this decision. The Technology Center's support staff will notify the Examiner of this decision, so that the amendment which was received with the present petition can be processed.

The general phone number for the Office of Petitions which should be used for status requests is (571) 272-3282. Telephone inquiries regarding this decision should be directed to the undersigned at (571) 272-3225.

Paul Shanoski
Senior Attorney
Office of Petitions
United States Patent and Trademark Office

UNITED STATES PATENT AND TRADEMARK OFFICE

Commissioner for Patents
United States Patent and Trademark Office
P.O. Box 1450
Alexandria, VA 22313-1450
www.uspto.gov
DIW May-08

LAW OFFICE OF ERIC G. MASAMORI
444 KIT FOX COURT
WALNUT CREEK CA 94598

COPY MAILED

MAY 0 8 2008

OFFICE OF PETITIONS

In re Application of :
Thomas T. Aoki :
Application Number: 10/738897 :
Filing Date: 12/17/2003 :
Attorney Docket Number: 113-011 :

ON PETITION

This is a decision on the petition under 37 CFR 1.137(a), filed on March 4, 2008, to revive the above-identified application.

The petition is **DISMISSED**.

Any request for reconsideration of this decision must be submitted within TWO (2) MONTHS from the mail date of this decision. Extensions of time under 37 CFR 1.136(a) are permitted. The reconsideration request should include a cover letter entitled "Renewed Petition under 37 CFR 1.137(a)" or "Renewed Petition under 37 CFR 1.137(b)." This is not a final agency decision.

This application became abandoned on September 24, 2007, for failure to timely file a response to the Notice of Non-Compliant Amendment (37 CFR 1.121) mailed on August 23, 2007, which set a one (1) month shortened period for reply. No extensions of the time for reply in accordance with 37 CFR 1.136(a) were obtained. The filing of the present petition precedes the mailing of Notice of Abandonment.

Petitioner's counsel states, in pertinent part:

> Notice of Non-Compliant Amendment, mailed on 8/23/2007, was never received by my office.
>
> Examiner Stigell called on February 29, 2008 to inquire about status of response. This was the first time I became aware of the Notice of Non-Compliant Amendment.

A grantable petition to revive an abandoned application under 37 CFR 1.137(a) must be accompanied by:

> (1) the required reply, unless previously filed. In a nonprovisional application abandoned for failure to prosecute, the required reply may be met by the filing of a continuing application. In a nonprovisional application filed on or after June 8, 1995, and abandoned for failure to prosecute, the required reply may also be met by the filing of a request for continued examination in compliance with § 1.114. In an application or patent, abandoned or lapsed for failure to pay the issue fee or any portion thereof, the required reply must be the payment of the issue fee or any outstanding balance thereof. In an application, abandoned for failure to pay the publication fee, the required reply must include payment of the publication fee;
>
> (2) the petition fee as set forth in § 1.17(l);
>
> (3) a showing to the satisfaction of the Director that the entire delay in filing the required reply from the due date for the reply until the filing of a grantable petition pursuant to this paragraph was unavoidable; and
>
> (4) any terminal disclaimer (and fee as set forth in § 1.20(d)) required pursuant to paragraph (c) of this section.

This petition lacks item (3) above.

Decisions on reviving abandoned applications on the basis of "unavoidable" delay have adopted the reasonably prudent person standard in determining if the delay was unavoidable:

> The word 'unavoidable' . . . is applicable to ordinary human affairs, and requires no more or greater care or diligence than is generally used and observed by prudent and careful men in relation to their most important business. It permits them in the exercise of this care to rely upon the ordinary and trustworthy agencies of mail and telegraph, worthy and reliable employees, and such other means and instrumentalities as are usually employed in such important business. If unexpectedly, or through the unforeseen fault or imperfection of these agencies and instrumentalities, there occurs a failure, it may properly be said to be unavoidable, all other conditions of promptness in its rectification being present.[1]

---

[1] In re Mattullath, 38 App. D.C. 497, 514-15 (1912)(quoting Ex parte Pratt, 1887 Dec. Comm'r Pat. 31, 32-33 (1887)); see also Winkler v. Ladd, 221 F. Supp. 550, 552, 138 USPQ 666, 167-68 (D.D.C. 1963), aff'd, 143 USPQ 172 (D.C. Cir. 1963); Ex parte Henrich, 1913 Dec. Comm'r Pat. 139, 141

The showing of record is inadequate to establish unavoidable delay within the meaning of 37 CFR 1.137(a). Specifically, an application is "unavoidably" abandoned only where petitioner, or counsel for petitioner, takes all action necessary for a proper response to the outstanding Office action, but through the intervention of unforeseen circumstances, such as failure or mail, telegraph, telefacsimile, or the negligence of otherwise reliable employees, the response is not timely received in the Office.[2]

With regards to counsel's assertion that the Notice of Non-Compliant Amendment was never received, MPEP 711.03(c) states:

> In Delgar v. Schulyer, 172 USPQ 513 (D.D.C. 1971), the court decided that the Office should mail a new Notice of Allowance in view of the evidence presented in support of the contention that the applicant's representative did not receive the original Notice of Allowance. Under the reasoning of Delgar, an allegation that an Office action was never received may be considered in a petition to withdraw the holding of abandonment. If adequately supported, the Office may grant the petition to withdraw the holding of abandonment and remail the Office action. That is, the reasoning of Delgar is applicable regardless of whether an application is held abandoned for failure to timely pay the issue fee (35 U.S.C. 151) or for failure to prosecute (35 U.S.C. 133).
>
> To minimize costs and burdens to practitioners and the Office, the Office has modified the showing required to establish nonreceipt of an Office action. The showing required to establish nonreceipt of an Office communication must include a statement from the practitioner describing the system used for recording an Office action received at the correspondence address of record with the USPTO. The statement should establish that the docketing system is sufficiently reliable. It is expected that the record would include, but not be limited to, the application number, attorney docket number, the mail date of the Office action and the due date for the response.

(1913). In addition, decisions on revival are made on a "case-by-case basis, taking all the facts and circumstances into account."

[2] Ex parte Pratt, 1887 Dec. Comm'r Pat. 31 (Comm'r Pat. 1887).

> Practitioner must state that the Office action was not received at the correspondence address of record, and that a search of the practitioner's record(s), including any file jacket or the equivalent, and the application contents, indicates that the Office action was not received. A copy of the record(s) used by the practitioner where the non-received Office action would have been entered had it been received is required. A copy of the practitioner's record(s) required to show non-receipt of the Office action should include the master docket for the firm. That is, if a three month period for reply was set in the nonreceived Office action, a copy of the master docket report showing all replies docketed for a date three months from the mail date of the nonreceived Office action must be submitted as documentary proof of nonreceipt of the Office action. If no such master docket exists, the practitioner should so state and provide other evidence such as, but not limited to, the following: the application file jacket; incoming mail log; calendar; reminder system; or the individual docket record for the application in question.
>
> The showing outlined above may not be sufficient if there are circumstances that point to a conclusion that the Office action may have been lost after receipt rather than a conclusion that the Office action was lost in the mail (e.g., if the practitioner has a history of not receiving Office actions).

Petitioner has provided no evidence in support of a showing that the Notice of Non-Compliant Amendment mailed on August 23, 2007, was never received.

If petitioner can provide a showing, as described above, that the Notice of Non-Compliant Amendment mailed on August 23, 2007, was not received, petitioner should file a renewed petition under 37 CFR 1.137(a), accompanied by such proof of nonreceipt of the Notice of Non-Compliant Amendment mailed on August 23, 2007.

A delay resulting from the lack of knowledge or improper application of the patent statute, rules of practice or the MPEP does not constitute an "unavoidable" delay.[3] A delay caused by an applicant's lack of knowledge or improper application of the patent statute, rules of practice or the MPEP is not rendered

---

[3] Id.

"unavoidable" due to: (1) the applicant's reliance upon oral advice from Office employees; or (2) the Office's failure to advise the applicant of any deficiency in sufficient time to permit the applicant to take corrective action.[4]

As the showing presented is insufficient to establish unavoidable delay within the meaning of 35 U.S.C. § 133 and 37 CFR 1.137(a), the petition will be dismissed.

ALTERNATIVE VENUE

Petitioner may wish to consider filing a renewed petition under 37 CFR 1.137(b),[5] which now provides that where the delay in reply was unintentional, a petition may be filed to revive an abandoned application or a lapsed patent pursuant to 37 CFR 1.137(b).

The filing of a petition under the unintentional standard cannot be intentionally delayed and therefore should be filed promptly. A person seeking revival due to unintentional delay cannot make a statement that the delay was unintentional unless the entire delay, including the delay from the date it was discovered that the application was abandoned until the filing of the petition to revive under 37 CFR 1.137(b), was unintentional. A statement that the delay was unintentional is not appropriate if petitioner

---

[4] See In re Sivertz, 227 USPQ 255, 256 (Comm'r Pat. 1985); see also In re Colombo, Inc., 33 USPQ2d 1530, 1532 (Comm'r Pat. 1994)(while the Office attempts to notify applicants of deficiencies in their responses in a manner permitting a timely correction, the Office has no obligation to notify parties of deficiencies in their responses in a manner permitting a timely correction).

[5] Effective December 1, 1997, the provisions of 37 CFR 1.137(b) now provide that where the delay in reply was unintentional, a petition may be filed to revive an abandoned application or a lapsed patent pursuant to 37 CFR 1.137(b). A grantable petition filed under the provisions of 37 CFR 1.137(b) must be accompanied by:

(1) the required reply, unless previously filed. In a nonprovisional application abandoned for failure to prosecute, the required reply may be met by the filing of a continuing application. In a nonprovisional utility or plant application filed on or after June 8, 1995, and abandoned for failure to prosecute, the required reply may also be met by the filing of a request for continued examination in compliance with § 1.114. In an application or patent, abandoned or lapsed for failure to pay the issue fee or any portion thereof, the required reply must be the payment of the issue fee or any outstanding balance thereof. In an application, abandoned for failure to pay the publication fee, the required reply must include payment of the publication fee;

(2) the petition fee as set forth in 37 CFR 1.17(m);

(3) a statement that the entire delay in filing the required reply from the due date for the reply until the filing of a grantable petition pursuant to 37 CFR 1.137(b) was unintentional. The Director may required additional information where there is a question whether the delay was unintentional; and

(4) any terminal disclaimer (and fee as set forth in 37 CFR 1.20(d)) required pursuant to 37 CFR 1.137(c)).

intentionally delayed the filing of a petition for revival under 37 CFR 1.137(b).

A copy of the form for filing a petition under 37 CFR 1.137(b) to revive an application unintentionally abandoned is enclosed herewith for petitioner's convenience.

Further correspondence with respect to this matter should be addressed as follows:

By mail: Mail Stop Petition
Commissioner for Patents
P.O. Box 1450
Alexandria, VA 22313-1450

By FAX: (571) 273-8300
Attn: Office of Petitions

By hand: Customer Service Window
Mail Stop Petition
401 Dulany Street
Alexandria, VA 22314

Telephone inquiries related to this decision should be directed to the undersigned at 571-272-3231.

Douglas I. Wood
Senior Petitions Attorney
Office of Petitions

Encl: PTO/SB/64
Privacy Act Statement

PTO/SB/64 (01-08)
Approved for use through 05/31/2008. OMB 0651-0031
U.S. Patent and Trademark Office; U.S. DEPARTMENT OF COMMERCE
Under the Paperwork Reduction Act of 1995, no persons are required to respond to a collection of information unless it displays a valid OMB control number.

PETITION FOR REVIVAL OF AN APPLICATION FOR PATENT ABANDONED UNINTENTIONALLY UNDER 37 CFR 1.137(b)

Docket Number (Optional)

First named inventor:

Application No.: Art Unit:

Filed: Examiner:

Title:

Attention: Office of Petitions
Mail Stop Petition
Commissioner for Patents
P.O. Box 1450
Alexandria, VA 22313-1450
FAX (571) 273-8300

NOTE: If information or assistance is needed in completing this form, please contact Petitions Information at (571) 272-3282.

The above-identified application became abandoned for failure to file a timely and proper reply to a notice or action by the United States Patent and Trademark Office. The date of abandonment is the day after the expiration date of the period set for reply in the office notice or action plus an extensions of time actually obtained.

APPLICANT HEREBY PETITIONS FOR REVIVAL OF THIS APPLICATION

NOTE: A grantable petition requires the following items:
(1) Petition fee;
(2) Reply and/or issue fee;
(3) Terminal disclaimer with disclaimer fee - required for all utility and plant applications filed before June 8, 1995; and for all design applications; and
(4) Statement that the entire delay was unintentional.

1.Petition fee

☐ Small entity-fee $ _____ (37 CFR 1.17(m)). Applicant claims small entity status. See 37 CFR 1.27.

☐ Other than small entity – fee $ _____ (37 CFR 1.17(m))

2. Reply and/or fee

A. The reply and/or fee to the above-noted Office action in the form of _____(identify type of reply):

☐ has been filed previously on _____.
☐ is enclosed herewith.

B. The issue fee and publication fee (if applicable) of $ _____.

☐ has been paid previously on _____.
☐ is enclosed herewith.

This collection of information is required by 37 CFR 1.137(b). The information is required to obtain or retain a benefit by the public which is to file (and by the USPTO to process) an application. Confidentiality is governed by 35 U.S.C. 122 and 37 CFR 1.11 and 1.14. This collection is estimated to take 1.0 hour to complete, including gathering, preparing, and submitting the completed application form to the USPTO. Time will vary depending upon the individual case. Any comments on the amount of time you require to complete this form and/or suggestions for reducing this burden, should be sent to the Chief Information Officer, U.S. Patent and Trademark Office, U.S. Department of Commerce, P.O. Box 1450, Alexandria, VA 22313-1450. DO NOT SEND FEES OR COMPLETED FORMS TO THIS ADDRESS. **SEND TO: Mail Stop Petition, Commissioner for Patents, P.O. Box 1450, Alexandria, VA 22313-1450.**

If you need assistance in completing the form, call 1-800-PTO-9199 and select option 2.

3. Terminal disclaimer with disclaimer fee

☐ Since this utility/plant application was filed on or after June 8, 1995, no terminal disclaimer is required.

☐ A terminal disclaimer (and disclaimer fee (37 CFR 1.20(d)) of $ _____ for a small entity or $ _____ for other than a small entity) disclaiming the required period of time is enclosed herewith (see PTO/SB/63).

4. STATEMENT: The entire delay in filing the required reply from the due date for the required reply until the filing of a grantable petition under 37 CFR 1.137(b) was unintentional. [NOTE: The United States Patent and Trademark Office may require additional information if there is a question as to whether either the abandonment or the delay in filing a petition under 37 CFR 1.137(b) was unintentional (MPEP 711.03(c), subsections (III)(C) and (D)).]

WARNING:

Petitioner/applicant is cautioned to avoid submitting personal information in documents filed in a patent application that may contribute to identity theft. Personal information such as social security numbers, bank account numbers, or credit card numbers (other than a check or credit card authorization form PTO-2038 submitted for payment purposes) is never required by the USPTO to support a petition or an application. If this type of personal information is included in documents submitted to the USPTO, petitioners/applicants should consider redacting such personal information from the documents before submitting them to the USPTO. Petitioner/applicant is advised that the record of a patent application is available to the public after publication of the application (unless a non-publication request in compliance with 37 CFR 1.213(a) is made in the application) or issuance of a patent. Furthermore, the record from an abandoned application may also be available to the public if the application is referenced in a published application or an issued patent (see 37 CFR 1.14). Checks and credit card authorization forms PTO-2038 submitted for payment purposes are not retained in the application file and therefore are not publicly available.

_____ Signature

_____ Date

_____ Typed or printed name

_____ Registration Number, if applicable

_____ Address

_____ Telephone Number

_____ Address

Enclosures:
☐ Fee Payment
☐ Reply
☐ Terminal Disclaimer Form
☐ Additional sheets containing statements establishing unintentional delay
☐ Other: _____

CERTIFICATE OF MAILING OR TRANSMISSION [37 CFR 1.8(a)]

I hereby certify that this correspondence is being:

☐ Deposited with the United States Postal Service on the date shown below with sufficient postage as first class mail in an envelope addressed to: Mail Stop Petition, Commissioner for Patents, P. O. Box 1450, Alexandria, VA 22313-1450.

☐ Transmitted by facsimile on the date shown below to the United States Patent and Trademark Office at (571) 273-8300.

_____ Date

_____ Signature

_____ Typed or printed name of person signing certificate

Privacy Act Statement

The **Privacy Act of 1974 (P.L. 93-579)** requires that you be given certain information in connection with your submission of the attached form related to a patent application or patent. Accordingly, pursuant to the requirements of the Act, please be advised that: (1) the general authority for the collection of this information is 35 U.S.C. 2(b)(2); (2) furnishing of the information solicited is voluntary; and (3) the principal purpose for which the information is used by the U.S. Patent and Trademark Office is to process and/or examine your submission related to a patent application or patent. If you do not furnish the requested information, the U.S. Patent and Trademark Office may not be able to process and/or examine your submission, which may result in termination of proceedings or abandonment of the application or expiration of the patent.

The information provided by you in this form will be subject to the following routine uses:

1. The information on this form will be treated confidentially to the extent allowed under the Freedom of Information Act (5 U.S.C. 552) and the Privacy Act (5 U.S.C 552a). Records from this system of records may be disclosed to the Department of Justice to determine whether disclosure of these records is required by the Freedom of Information Act.
2. A record from this system of records may be disclosed, as a routine use, in the course of presenting evidence to a court, magistrate, or administrative tribunal, including disclosures to opposing counsel in the course of settlement negotiations.
3. A record in this system of records may be disclosed, as a routine use, to a Member of Congress submitting a request involving an individual, to whom the record pertains, when the individual has requested assistance from the Member with respect to the subject matter of the record.
4. A record in this system of records may be disclosed, as a routine use, to a contractor of the Agency having need for the information in order to perform a contract. Recipients of information shall be required to comply with the requirements of the Privacy Act of 1974, as amended, pursuant to 5 U.S.C. 552a(m).
5. A record related to an International Application filed under the Patent Cooperation Treaty in this system of records may be disclosed, as a routine use, to the International Bureau of the World Intellectual Property Organization, pursuant to the Patent Cooperation Treaty.
6. A record in this system of records may be disclosed, as a routine use, to another federal agency for purposes of National Security review (35 U.S.C. 181) and for review pursuant to the Atomic Energy Act (42 U.S.C. 218(c)).
7. A record from this system of records may be disclosed, as a routine use, to the Administrator, General Services, or his/her designee, during an inspection of records conducted by GSA as part of that agency's responsibility to recommend improvements in records management practices and programs, under authority of 44 U.S.C. 2904 and 2906. Such disclosure shall be made in accordance with the GSA regulations governing inspection of records for this purpose, and any other relevant (*i.e.*, GSA or Commerce) directive. Such disclosure shall not be used to make determinations about individuals.
8. A record from this system of records may be disclosed, as a routine use, to the public after either publication of the application pursuant to 35 U.S.C. 122(b) or issuance of a patent pursuant to 35 U.S.C. 151. Further, a record may be disclosed, subject to the limitations of 37 CFR 1.14, as a routine use, to the public if the record was filed in an application which became abandoned or in which the proceedings were terminated and which application is referenced by either a published application, an application open to public inspection or an issued patent.
9. A record from this system of records may be disclosed, as a routine use, to a Federal, State, or local law enforcement agency, if the USPTO becomes aware of a violation or potential violation of law or regulation.

UNITED STATES PATENT AND TRADEMARK OFFICE

Commissioner for Patents
United States Patent and Trademark Office
P.O. Box 1450
Alexandria, VA 22313-1450
www.uspto.gov
DRW Jul-08

LAW OFFICE OF ERIC G. MASAMORI
444 KIT FOX COURT
WALNUT CREEK CA 94598

COPY MAILED

JUL 25 2008

In re Application of :
Thomas T. Aoki :
Application Number: 10/738897 : ON PETITION
Filing Date: 12/17/2003 :
Attorney Docket Number: 113-011 :
:

This is a decision on the twice renewed petition under 37 CFR 1.137(a), filed on May 15, 2008, to revive the above-identified application.

The petition is **GRANTED**.

The application became abandoned on September 24, 2007, for failure to timely file a response to the Notice of Non-Compliant Amendment (37 CFR 1.121) mailed on August 23, 2007, which set a one (1) month shortened period for reply. No extensions of the time for reply in accordance with 37 CFR 1.136(a) were obtained. The filing of the present petition precedes the mailing of Notice of Abandonment. The petition under 37 CFR 1.137(a) filed on March 4, 2008, was dismissed on May 8, 2008.

The application is restored to pending status.

The application is being referred to Technology Center Art Unit 3763 for further processing.

Telephone inquiries concerning this matter may be directed to the undersigned at (571) 272-3231.

D Wood

Douglas I. Wood
Senior Petitions Attorney
Office of Petitions

UNITED STATES PATENT AND TRADEMARK OFFICE

UNITED STATES DEPARTMENT OF COMMERCE
United States Patent and Trademark Office
Address: COMMISSIONER FOR PATENTS
P.O. Box 1450
Alexandria, Virginia 22313-1450
www.uspto.gov

DRINKER BIDDLE & REATH LLP
ATTN: PATENT DOCKET DEPT.
191 N. WACKER DRIVE, SUITE 3700
CHICAGO, IL 60606

Mail Date: 04/20/2010

Applicant	: Hun-Young Ryu	: DECISION ON REQUEST FOR
Patent Number	: 7616257	: RECALCULATION of PATENT
Issue Date	: 11/10/2009	: TERM ADJUSTMENT IN VIEW
Appliction No	: 10/738,902	: OF WYETH AND NOTICE OF INTENT TO
Filed	: 12/17/2003	: ISSUE CERTIFICATE OF CORRECTION
		:

The Request for Recalculation is **GRANTED** to the extent indicated.

The patent term adjustment has been determined to be **1727** days. The USPTO will *sua sponte* issue a certificate of correction reflecting the amount of PTA days determined by the recalculation.

Prior to the issuance of the certificate of correction, the USPTO will afford patentee an opportunity to be heard and request reconsideration. Accordingly, patentee has **one month or thirty (30) days**, whichever is longer, to file a request for reconsideration of this patent term adjustment calculation. See 35 U.S.C. 154(b)(3)(B)(ii) and 37 CFR 1.322(a)(4). No extensions of time will be granted under 37 CFR 1.136.

Patentee should use document code PET.OP if electronically filing a request for reconsideration of this patent term adjustment calculation. The patentee must also include the information required by 37 CFR 1.705(b)(2) and the fee required by 37 CFR 1.18(e). If patentee does not file a timely request for reconsideration of this patent term adjustment calculation including the information required by 37 CFR 1.705(b)(2) and the fee required by 37 CFR 1.18(e), the USPTO will issue a certificate of correction reflecting the PTA determination noted above.

Patentee should be aware that in order to preserve the right to review in the United States District Court for the District of Columbia of the USPTO patent term adjustment determination, patentee must ensure that he or she also take the steps required under 35 U.S.C. 154(b)(4)(A) in a timely manner. Nothing in the request for recalculation should be construed as providing an alternative time frame for commencing a civil action under 35 U.S.C. 154(b)(4)(A).

Any questions concerning this decision should be directed to the Office of Patent Legal Administration at 571-272-7702.

United States
Patent And
Trademark Office

P.O. Box 1450, Alexandria, Virginia 22313-1450 – www.uspto.gov

PETITION DECISION

04/12/04

Jeffrey C. Aldridge
Fish & Neave
1251 Avenue of the Americas
New York, NY 10020-1104

Dear Applicant:

The Box PG Pub replacement drawings for application number 10/738910 received on 02/17/04 by the U. S. Patent and Trademark Office will be included for patent publication.

Telephone inquiries should be directed to Kaletus King, Office of Pre-Grant Publication 703 605-4283.

Kaletus King

Signature of Reviewer, Office of Pre-Grant Publication

UNITED STATES PATENT AND TRADEMARK OFFICE

Commissioner for Patents
United States Patent and Trademark Office
P.O. Box 1450
Alexandria, VA 22313-1450
www.uspto.gov

FISH & RICHARDSON P.C.
3300 DAIN RAUSCHER PLAZA
MINNEAPOLIS, MN 55402

COPY MAILED

JUL 19 2004

OFFICE OF PETITIONS

In re Application of :
Jeffrey H. Hoel : DECISION GRANTING
Application No. 10/738,918 : PETITION
Filed: December 16, 2003 :
Attorney Docket No. :
07844-255002/P229 C1

This is a decision on the papers styled, "Request To Correct Filing Date," filed June 30, 2004, which has been treated as a petition under 37 CFR 1.10(c), requesting that the above-identified application be accorded a filing date of December 16, 2003, rather than the presently accorded filing date of December 18, 2003.

Petitioners allege that the application was deposited in Express Mail service on December 16, 2003. In support, the petition is accompanied by a copy of Express Mail Receipt No. EV321387654US (the same Express Mail number found on the original application papers located in the official file). The "date-in" on the Express Mail Receipt is illegible, however the receipt is postmarked December 16, 2003 by the USPS.

In view of the above, the petition is **GRANTED**.

Accordingly, the application is entitled to a filing date of December 16, 2003.

The application is being returned to the Office of Initial Patent Examination for processing with a filing date of December 16, 2003 and issuance of a corrected filing receipt. Thereafter, the application will be forwarded to Technology Center 2600 for examination in due course.

Telephone inquiries concerning this matter may be directed to the undersigned at (703) 306-9200.

Edward J. Tannouse
Petitions Attorney
Office of Petitions
United States Patent and Trademark Office

UNITED STATES PATENT AND TRADEMARK OFFICE

Commissioner for Patents
United States Patent and Trademark Office
P.O. Box 1450
Alexandria, VA 22313-1450
www.uspto.gov

FISH & RICHARDSON PC
P.O. BOX 1022
MINNEAPOLIS MN 55440-1022

COPY MAILED

NOV 0 6 2008

OFFICE OF PETITIONS

In re Application of :
Merfeld, et al. :
Application No. 10/738,920 : ON PETITION
Filed: December 16, 2003 :
Attorney Docket No. 00633-036001 / 02/040 :
For: VESTIBULAR STIMULATOR

This is a decision on the petition under 37 CFR 1.181, filed September 12, 2008, requesting that the Office withdraw the holding of abandonment of the above-identified application.

The petition under 37 CFR 1.181 is **GRANTED**.

This application was held abandoned for failure to seek court review of the Board of Patent Appeals and Interferences Decision on Appeal within two months of the August 19, 2008 decision. A Notice of Abandonment was mailed on August 22, 2008.

Petitioners argue that the application did not become abandoned because under 35 U.S.C. 142, applicants have 60 days from the date of the Board decision to appeal to the Federal Circuit and under 37 CFR 41.52, applicants have two months from the date of the Board decision to request a rehearing. As such, the Notice of Abandonment was mailed prematurely.

The petition under 37 CFR 1.181 is **granted** and the August 22, 2008 Notice of Abandonment is **vacated**. No petition fee has been or will be charged in connection with this matter.

Petitioners filed a Request for Rehearing on October 20, 2008. As the sixty day response deadline fell on a weekend day, the Request for Rehearing was timely filed on Monday, October 20, 2008.

After the mailing of this decision, the application will be referred to the Board of Appeals for consideration of the Request for Rehearing, filed October 20, 2008.

Telephone inquiries pertaining to this matter may be directed to the undersigned at (571) 272-3230.

Shirene Willis Brantley
Senior Petitions Attorney
Office of Petitions

UNITED STATES PATENT AND TRADEMARK OFFICE

Commissioner for Patents
United States Patent and Trademark Office
P.O. Box 1450
Alexandria, VA 22313-1450
www.uspto.gov

FISH & RICHARDSON PC
P.O. BOX 1022
MINNEAPOLIS MN 55440-1022

8/27/09

In re Application of:
MERFELD, DANIEL M. et al
Serial No.: 10/738,920
Filed: Dec. 16, 2003
Docket: 00633-036001 / 02/040
Title: VESTIBULAR STIMULATOR

DECISION ON PETITION TO REINSTATE APPEAL UNDER 37 CFR 1.181

This is a decision on the petition filed on July 9, 2009 seeking entry of the amendment filed on July 9, 2009 and reopening prosecution after the Board decision under 37 CFR 41.50(b)(1). The petition is being considered pursuant to 37 CFR 1.181. No fee is required.

The petition is **DISMISSED**.

The record shows:

1. In the Board decision of January 27, 2009, the Board granted the appellant's request to acknowledge there was new a ground of rejection for claims 1-5, 11, 12 and 38 so that the appellant may either present appropriate amendment for re-open prosecution or file additional request for rehearing under 37 CFR 41.50[1].

[1] § 41.50 Decisions and other actions by the Board. (a) (1)The Board, in its decision, may affirm or reverse the decision of the examiner in whole or in part on the grounds and on the claims specified by the examiner. The affirmance of the rejection of a claim on any of the grounds specified constitutes a general affirmance of the decision of the examiner on that claim, except as to any ground specifically reversed. The Board may also remand an application to the examiner. (2) If a supplemental examiner's answer is written in response to a remand by the Board for further consideration of a rejection pursuant to paragraph (a)(1) of this section, the appellant must within two months from the date of the supplemental examiner's answer exercise one of the following two options to avoid sua sponte dismissal of the appeal as to the claims subject to the rejection for which the Board has remanded the proceeding: (i) Reopen prosecution . Request that prosecution be reopened before the examiner by filing a reply under § 1.111 of this title with or without amendment or submission of affidavits (§§ 1.130, 1.131 or 1.132 of this title) or other evidence. Any amendment or submission of affidavits or other evidence must be relevant to the issues set forth in the remand or raised in the supplemental examiner's answer. A request that complies with this paragraph will be entered and the application or the patent under ex parte reexamination will be reconsidered by the examiner under the provisions of § 1.112 of this title. Any request that prosecution be reopened under this paragraph will be treated as a request to withdraw the appeal. (ii) Maintain appeal . Request that the appeal be maintained by filing a reply brief as provided in § 41.41. If such a reply brief is accompanied by any amendment, affidavit or other evidence, it shall be treated as a request that prosecution be reopened before the examiner under paragraph (a)(2)(i) of this section. (b) Should the Board have knowledge of any grounds not involved in the appeal for rejecting any pending claim, it may include in its opinion a statement to that effect with its reasons for so holding, which statement constitutes a new ground of rejection of the claim. A new ground of rejection pursuant to this paragraph shall not be considered final for judicial review. When the Board makes a new ground of rejection, the appellant, within two months from the date of the decision, must exercise one of the following two options with respect to the new ground of rejection to avoid termination of the appeal as to the rejected claims: (1) Reopen prosecution . Submit an appropriate amendment of the claims so rejected or new

2. In response to the Board decision on Request for Rehearing, on March 27, 2009, the appellant submitted an amendment to the claims 1, 4, 12, 36 and 39 and added additional new claims 39-55 under 37 CFR 41.50(d). In the response, the appellant also presented arguments to rebut the Board's reasoning regarding Lattner patent (pages 8-11 of the Remarks of March 27, 2009).
3. On May 26, 2009, the examiner has considered the amendment of March 27, 2009 and stated in the advisory action that the amendment is not an appropriate amendment as defined under MPEP 1214.01(1). In particular, the newly added claims are not directed to the same subject matter as the appealed claims. Therefore, the examiner returned the application file to the Board for consideration of the amendment as a request for rehearing under 37 CFR 41.50(b) (2) (See MPEP 1214.01(I)).
4. In response to the examiner's advisory action, on July 9, 2009, the appellant submitted an appropriate amendment cancelling the new claims added so that the new amendment will be in compliance with MPEP 1214.01(I) in order to meet the requirement for re-opening prosecution under 37 CFR § 40.50(b)(1).
5. On July 9, 2009, the appellant also file the current petition under Rule 181 to compel the examiner to re-open prosecution.

Analysis and Discussion

In the petition, petitioner argues that to forward the case back to the Board for a rehearing would only delay prosecution and be unproductive. Petitioner also argues that by requesting re-opening of prosecution to enter the proposed amendments of July 9, 2009 would expedite the prosecution of the case. However, the amendment of July 9, 2009 is not timely filed. This amendment was filed outside of the two-month period as provided in the Decision on Request on Rehearing mailed January 27, 2009. There is no extension of time permitted under 37 CFR 1.136(b) and 37 CFR 41.50(f). Since there is no extension of time permitted, the amendment of July 9, 2009 will not be entered. Moreover, it is noted that the March 27, 2009 amendment does contain arguments directed to the new grounds of rejection issued by the Board. The examiner has properly treated the amendment of March 27, 2009 as a Request for Rehearing under MPEP 1214.01 and 37 CFR 41.50(b) (2). This application will remain with the Board awaiting consideration of the amendment of March 27, 2009. However, in the interest of expedience,

---

evidence relating to the claims so rejected, or both, and have the matter reconsidered by the examiner, in which event the proceeding will be remanded to the examiner. The new ground of rejection is binding upon the examiner unless an amendment or new evidence not previously of record is made which, in the opinion of the examiner, overcomes the new ground of rejection stated in the decision. Should the examiner reject the claims, appellant may again appeal to the Board pursuant to this subpart. (2) Request rehearing .Request that the proceeding be reheard under § 41.52 by the Board upon the same record. The request for rehearing must address any new ground of rejection and state with particularity the points believed to have been misapprehended or overlooked in entering the new ground of rejection and also state all other grounds upon which rehearing is sought. (c) The opinion of the Board may include an explicit statement of how a claim on appeal may be amended to overcome a specific rejection. When the opinion of the Board includes such a statement, appellant has the right to amend in conformity therewith. An amendment in conformity with such statement will overcome the specific rejection. An examiner may reject a claim so-amended, provided that the rejection constitutes a new ground of rejection. (d) The Board may order appellant to additionally brief any matter that the Board considers to be of assistance in reaching a reasoned decision on the pending appeal. Appellant will be given a non-extendable time period within which to respond to such an order. Failure to timely comply with the order may result in the sua sponte dismissal of the appeal. (e) Whenever a decision of the Board includes a remand, that decision shall not be considered final for judicial review. When appropriate, upon conclusion of proceedings on remand before the examiner, the Board may enter an order otherwise making its decision final for judicial review. (f) Extensions of time under § 1.136(a) of this title for patent applications are not applicable to the time periods set forth in this section. See § 1.136(b) of this title for extensions of time to reply for patent applications and § 1.550(c) of this title for extensions of time to reply for ex parte reexamination proceedings.

petitioner may wish to consider filing an RCE to obtain entry of the amendment filed on July 9, 2009 so that the examiner will have an opportunity to fully examine all claims presented by the latest amendment.

Conclusion

Since the amendment of July 9, 2009 was not timely filed, the applicant's request for entry of the amendment and reopening prosecution will not be granted.

The application is being forwarded to the Board of Patent Appeals and Interference for further consideration as a request for rehearing filed on March 27, 2009. Any request for reconsideration of this decision must be submitted within TWO (2) MONTHS from the mail date of this decision, 37 CFR 1.181(f). No extension of time under 37 CFR 1.136(a) is permitted. The reconsideration request should include a cover letter entitled "Renewed Petition under 37 CFR 1.181". Any inquiry regarding this decision should be directed to Henry Yuen, Special Programs Examiner, at (571) 272-4856.

The petition is DISMISSED.

Donald T. Hajec, Director
Technology Center 3700

UNITED STATES PATENT AND TRADEMARK OFFICE

NOV - 5 2004

COMMISSIONER FOR PATENTS
UNITED STATES PATENT AND TRADEMARK OFFICE
P.O. BOX 1450
ALEXANDRIA, VA 22313-1450
www.uspto.gov

MAILED

NOV - 5 2004

OFFICE OF THE DIRECTOR
TC 3600

William M. Hanlon, Jr.
Young & Basile, PC
3001 West Big Beaver Road
Suite 624
Troy, MI 48084-3107

In re application of
Steven E. Lenda, et al.
Application No. 10/738,930
Filed: December 17, 2003
For: AIR PERMEABLE, WATER REPELLENT, ACOUSTIC DOOR WATERSHIELD

DECISION ON PETITION TO MAKE SPECIAL (ACCELERATED EXAMINATION)

This is in response to the petition filed on December 17, 2003, to make the above-identified application special on the basis of special examining procedure for certain new applications - accelerated examination as set forth in MPEP § 708.02, VIII.

The requirements for granting special status under this section are: (A) a petition to make special accompanied by the fee set forth in 37 CFR 1.17(h); (B) all claims being directed to a single invention, or an election without traverse if the Office determines that all the claims are not directed to a single invention; (C) a statement that a pre-examination search was made listing the field of search; (D) one copy of each of the references deemed most closely related to the subject matter encompassed by the claims if said references are not already of record; and (E) a detailed discussion of how the claimed subject matter is patentable over the references in accordance with 37 CFR 1.111 (b) and (c).

The petition fails to adequately meet requirement (E) above. The petition includes a Detailed Discussion of the References by applicants' attorney, Mr. William M. Hanlon, Jr. Mr. Hanlon states, "All of the remaining patents in the Information Disclosure Statement teach air permeable, water repellent scrims or layers for use in a variety of garments, personal care products, medical products, protective covers and outdoor fabrics." This statement is insufficient to meet the requirement of a detailed discussion of how the claimed subject matter is patentable over the references in accordance with 37 CFR 1.111 (b) and (c).

For the above stated reason, the petition is **DISMISSED**.

In satisfaction of item (B) above, the petitioner states that "(i)f the Patent Office determines that all claims presented are not directed to single invention, Applicants will make an election without traverse upon notification by the United States Patent and Trademark Office."

Petitioner is given one more opportunity to perfect the petition. Any request for reconsideration must be filed within TWO MONTHS of the date of this decision. Extensions of time under 37 CFR 1.136(a) are permitted.

SUMMARY: Petition to Make Special **DISMISSED**.

Applicant should promptly submit a renewed petition to the Commissioner for Patents, P.O. Box 1450, Alexandria, VA 22313-1450. The envelope should indicate that the correspondence be brought to the attention of Technology Center 3600.

Until the renewed petition is submitted, the application will be returned to the examiner's docket to await treatment on the merits in the normal order of examination.

Kenneth J. Dorner
Special Programs Examiner
Technology Center 3600
(703) 308-0866

KJD/rwg: 10/30/04

UNITED STATES PATENT AND TRADEMARK OFFICE

COMMISSIONER FOR PATENTS
UNITED STATES PATENT AND TRADEMARK OFFICE
P.O. BOX 1450
ALEXANDRIA, VA 22313-1450
www.uspto.gov

DEC 22 2004

MAILED

DEC 22 2004

OFFICE OF THE DIRECTOR
TC 3600

William M. Hanlon, Jr.
Young & Basile, PC
3001 West Big Beaver Road
Suite 624
Troy, MI 48084-3107

In re application of
Steven E. Lenda, et al.
Application No. 10/738,930
Filed: December 17, 2003
For: AIR PERMEABLE, WATER REPELLENT, ACOUSTIC DOOR WATERSHIELD

: **DECISION ON PETITION**
: **TO MAKE SPECIAL**
: **(ACCELERATED**
: **EXAMINATION)**

This is in response to the renewed petition filed on November 15, 2004, to make the above-identified application special on the basis of special examining procedure for certain new applications - accelerated examination as set forth in MPEP § 708.02, VIII.

The requirements for granting special status under this section are: (A) a petition to make special accompanied by the fee set forth in 37 CFR 1.17(h); (B) all claims being directed to a single invention, or an election without traverse if the Office determines that all the claims are not directed to a single invention; (C) a statement that a pre-examination search was made listing the field of search; (D) one copy of each of the references deemed most closely related to the subject matter encompassed by the claims if said references are not already of record; and (E) a detailed discussion of how the claimed subject matter is patentable over the references in accordance with 37 CFR 1.111 (b) and (c).

Since all of the requirements for special status under MPEP § 708.02, VIII have been met, the petition is **GRANTED**.

In satisfaction of item (B) above, the petitioner states, "If the Patent Office determines that all claims presented are not directed to a single invention, Applicants will make an election without traverse upon notification by the United States Patent and Trademark Office."

The examiner is directed (1) to make an interference search for possible interfering applications, (2) to promptly examine this application out of turn, and (3) if any interfering application is discovered, to examine such application simultaneously and state in the first official letter of such application that it is being taken out of turn because of a possible interference.

Petitioner is advised that this application will continue to be special, throughout its entire prosecution and pendency, including interference or appeal, if any, only if petitioner makes a prompt ***bona fide*** effort, in response to each Office action, to place the application in condition for allowance, even if it is necessary to conduct an interview with the examiner to accomplish this purpose.

SUMMARY: Petition to Make Special **GRANTED.**

Steven N. Meyers
Special Programs Examiner
Technology Center 3600
(703) 308-3868

SNM/rwg: 12/16/04

UNITED STATES PATENT AND TRADEMARK OFFICE

COMMISSIONER FOR PATENTS
UNITED STATES PATENT AND TRADEMARK OFFICE
P.O. BOX 1450
ALEXANDRIA, VA 22313-1450
www.uspto.gov

MAILED

MAY 25 2004

DIRECTOR'S OFFICE
TECHNOLOGY CENTER 3600

ERIC K. SATERMO
P.O. Box 19099
Irvine CA 92623-9099

In re application of : **DECISION ON PETITION**
Axel Axelsson : **TO MAKE SPECIAL**
Application No. 10/738,934 : **(APPLICANT'S AGE)**
Filed: December 17, 2003 :
For: CONVERTIBLE WHEELCHAIR AND METHODS FOR MAKING THE SAME

This is a decision on the petition submitted on December 17, 2003 under 37 CFR 1.102 (c) to make the above-identified application special under the accelerated examination procedure set forth in MPEP 708.02, Section IV: Applicant's Age.

The petition is **GRANTED**.

An application may be accorded special status upon the filing of a petition providing evidence showing that the applicant is at least 65 years old. Such a showing may be provided by evidence such as a birth certificate or a statement from the applicant.

The evidence submitted with the petition is a copy of the driver's license of Mr. Axelsson indicating that he is at least 65 years of age.

The examiner is directed (1) to make an interference search for possible interfering applications, (2) to promptly examine this application out of turn, and (3) if any interfering application is discovered, to examine such application simultaneously and state in the first official letter of such application that it is being taken out of turn because of a possible interference.

Petitioner is advised that this application will continue to be special, throughout its entire prosecution and pendency, including interference or appeal, if any, only if petitioner makes a prompt ***bona fide*** effort, in response to each Office action, to place the application in condition for allowance, even if it is necessary to conduct an interview with the examiner to accomplish this purpose.

SUMMARY: Petition to Make Special **GRANTED**.

Kenneth J. Dorner
Special Programs Examiner
Technology Center 3600
(703) 308-0866

KJD/pav: 5/22/04

GM

UNITED STATES PATENT AND TRADEMARK OFFICE

UNITED STATES DEPARTMENT OF COMMERCE
United States Patent and Trademark Office
Address: COMMISSIONER FOR PATENTS
P.O. Box 1450
Alexandria, Virginia 22313-1450
www.uspto.gov

APPL NO.	FILING OR 371 (c) DATE	ART UNIT	FIL FEE REC'D	ATTY.DOCKET NO	DRAWINGS	TOT CLMS	IND CLMS
10/738,944	12/15/2003	1713	950	PO8064/MD-01-101		30	1

12/17/2003

OIPE JC55
APR 05 2004
PATENT & TRADEMARK OFFICE

00157
BAYER POLYMERS LLC
100 BAYER ROAD
PITTSBURGH, PA 15205

CONFIRMATION NO. 8500

FILING RECEIPT

OC000000012209504

Date Mailed: 03/29/2004

Receipt is acknowledged of this regular Patent Application. It will be considered in its order and you will be notified as to the results of the examination. Be sure to provide the U.S. APPLICATION NUMBER, FILING DATE, NAME OF APPLICANT, and TITLE OF INVENTION when inquiring about this application. Fees transmitted by check or draft are subject to collection. Please verify the accuracy of the data presented on this receipt. **If an error is noted on this Filing Receipt, please write to the Office of Initial Patent Examination's Filing Receipt Corrections, facsimile number 703-746-9195. Please provide a copy of this Filing Receipt with the changes noted thereon. If you received a "Notice to File Missing Parts" for this application, please submit any corrections to this Filing Receipt with your reply to the Notice. When the USPTO processes the reply to the Notice, the USPTO will generate another Filing Receipt incorporating the requested corrections (if appropriate).**

Applicant(s)

Richard R. Roesler, Wexford, PA; → Upper St. Clair
Jeffrey F. Dormish, Clair, PA;
Dinesh Pethiyagoda, Pittsburgh, PA;
Irene L. Yano, McKees Rocks, PA;

Domestic Priority data as claimed by applicant

Foreign Applications

If Required, Foreign Filing License Granted: 03/27/2004

Projected Publication Date: 06/16/2005

Non-Publication Request: No

Early Publication Request: No

Title

Two-component water-borne adhesive

Preliminary Class

RECEIVED
MAR 31 2004
PATENT DEPARTMENT

524

LICENSE FOR FOREIGN FILING UNDER
Title 35, United States Code, Section 184
Title 37, Code of Federal Regulations, 5.11 & 5.15

GRANTED

The applicant has been granted a license under 35 U.S.C. 184, if the phrase "IF REQUIRED, FOREIGN FILING LICENSE GRANTED" followed by a date appears on this form. Such licenses are issued in all applications where the conditions for issuance of a license have been met, regardless of whether or not a license may be required as set forth in 37 CFR 5.15. The scope and limitations of this license are set forth in 37 CFR 5.15(a) unless an earlier license has been issued under 37 CFR 5.15(b). The license is subject to revocation upon written notification. The date indicated is the effective date of the license, unless an earlier license of similar scope has been granted under 37 CFR 5.13 or 5.14.

This license is to be retained by the licensee and may be used at any time on or after the effective date thereof unless it is revoked. This license is automatically transferred to any related applications(s) filed under 37 CFR 1.53(d). This license is not retroactive.

The grant of a license does not in any way lessen the responsibility of a licensee for the security of the subject matter as imposed by any Government contract or the provisions of existing laws relating to espionage and the national security or the export of technical data. Licensees should apprise themselves of current regulations especially with respect to certain countries, of other agencies, particularly the Office of Defense Trade Controls, Department of State (with respect to Arms, Munitions and Implements of War (22 CFR 121-128)); the Office of Export Administration, Department of Commerce (15 CFR 370.10 (j)); the Office of Foreign Assets Control, Department of Treasury (31 CFR Parts 500+) and the Department of Energy.

NOT GRANTED

No license under 35 U.S.C. 184 has been granted at this time, if the phrase "IF REQUIRED, FOREIGN FILING LICENSE GRANTED" DOES NOT appear on this form. Applicant may still petition for a license under 37 CFR 5.12, if a license is desired before the expiration of 6 months from the filing date of the application. If 6 months has lapsed from the filing date of this application and the licensee has not received any indication of a secrecy order under 35 U.S.C. 181, the licensee may foreign file the application pursuant to 37 CFR 5.15(b).

Bayer Polymers
Americas

OIPE JC53
APR 05 2004
PATENT & TRADEMARK OFFICE

Writer's Direct Dial:
(412) 777-3924

April 1, 2004

Commissioner for Patents
Office of Initial Patent Examinations
Filing Receipt Corrections
P. O. Box 1450
Alexandria, VA 22313-1450

Re: PO-8064 / MD-01-101
U.S. Serial No. 10/738,944
Filing Date: December 17, 2003

Dear Sir:

With reference to the above-noted application, we wish to bring to your attention the following corrections on the filing receipt. Please make the following corrections:

Please correct Filing Date to read: 12/**17**/2003

Please correct Applicant No. 2 to read: Jeffrey F. Dormish, **Upper St.** Clair, PA;

Thank you for your attention to this matter. We are attaching a copy of the filing receipt and a copy of the Combined Declaration and Power of Attorney with noted corrections. We are also enclosing a copy of the Patent Card which shows the correct filing date. Please send us a corrected filing receipt for our file.

Thank you.

Sincerely,

Laura

Laura O'Connell
Patent Department

Enclosure
lo119

IN THE UNITED STATES PATENT AND TRADEMARK OFFICE

Docket No. P08064/MD-01-101

Serial No. To be Assigned Filed Herewith

By Richard R. Roesler et al

Kindly place the date below that the enclosed

Fee Transmittal Form (2); Utility Patent Application Transmittal Form (2) Patent Application with Combined Declaration and Power of Attorney; Assignment with Recordation Form; PTO Form 1449 with References

MoCo 13-3848 $770.00 + 180.00 + 40.00

was received in the Patent Office and return this card.

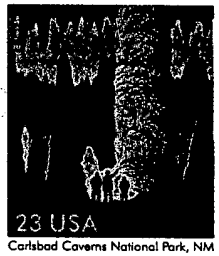

BAYER CORPORATION
PATENT DEPARTMENT
100 BAYER ROAD
PITTSBURGH PA 15205-9741

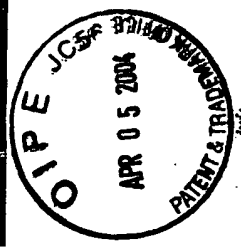

22581 U.S. PTO
10/738944

© USPS 2002 recycled

UNITED STATES PATENT AND TRADEMARK OFFICE

Commissioner for Patents
United States Patent and Trademark Office
P.O. Box 1450
Alexandria, VA 22313-1450
www.uspto.gov

VERTEX PHARMACEUTICALS INC.
130 WAVERLY STREET
CAMBRIDGE, MA 02139-4242

COPY MAILED

MAY 0 4 2007

OFFICE OF PETITIONS

In re Application of	:	ON PETITION
Jeremy Green et al	:	
Application No. 10/738,956	:	
Filed: December 17, 2003	:	
Attorney Docket No. VPI/02-124 US	:	

This is a decision on the petition under 37 CFR 1.137(b), filed December 11, 2006, to revive the above-identified application.

The petition is **GRANTED**.

The above-identified application became abandoned for failure to reply in a timely manner to the non-final Office action mailed April 21, 2006, which set a shortened statutory period for reply of three (3) months. No extension of time under the provisions of 37 CFR 1.136(a) were obtained. Accordingly, the above-identified application became abandoned on July 22, 2006.

Telephone inquiries concerning this decision should be directed to Irvin Dingle at (571) 272-3210.

This matter is being referred to Technology Center AU 1624 for further processing.

Irvin Dingle
Petitions Examiner
Office of Petitions

UNITED STATES PATENT AND TRADEMARK OFFICE

Commissioner for Patents
United States Patent and Trademark Office
P.O. Box 1450
Alexandria, VA 22313-1450
www.uspto.gov

ORRICK, HERRINGTON & SUFCLIFFE, LLP
4 PARK PLAZA
SUITE 1600
IRVINE CA 92614-2558

COPY MAILED

AUG 24 2006

OFFICE OF PETITIONS

In re Application of :
Mei, et al. :
Application No. 10/738,968 : DECISION ON PETITION
Filed: December 16, 2003 : TO WITHDRAW
Attorney Docket No. 45393.00002.UTL1 : FROM RECORD
:

This is a decision on the Request to Withdraw as attorney or agent of record under 37 C.F.R. § 1.36(b), filed July 20, 2005.

The request is **APPROVED**.

A grantable request to withdraw as attorney/agent of record must be signed by every attorney/agent seeking to withdraw or contain a clear indication that one attorney is signing on behalf of another/others. A request to withdraw will not be approved unless at least 30 (thirty) days would remain between the date of approval and the later of the expiration date of a time to file a response or the expiration date of the maximum time period which can be extended under 37 C.F.R. § 1.136(a).

The request was signed by Amy E. Simpson on behalf of all attorneys of record who are associated with customer No. 36183.

All attorneys/agents associated with the Customer Number 36183 have been withdrawn.

Applicant is reminded that there is no attorney of record at this time.

All future correspondence will be directed to the first named inventor Hsaio Lai Sean Mei at the address indicated below.

The request to change the correspondence of record is not acceptable as the requested correspondence address is not that of: (1) the first named signing inventor; or (2) an intervening assignee of the entire interest under 37 C.F.R 3.71. All future communications from the Office will be directed to the first named signing inventor at the first copied address below until otherwise properly notified by the applicant.

Telephone inquiries concerning this decision should be directed to April Wise at 571-272-1642.

April M. Wise
Petitions Examiner
Office of Petitions

cc: Hsaio Lai Sean Mei
1233 Howard Street
San Francisco, CA 94103

cc: Screampoint LLC
168 Townsend Street
San Francisco, CA 94107

UNITED STATES PATENT AND TRADEMARK OFFICE

Commissioner for Patents
United States Patent and Trademark Office
P.O. Box 1450
Alexandria, VA 22313-1450
www.uspto.gov

ORRICK, HERRINGTON & SUTCLIFFE, LLP
IP PROSECUTION DEPARTMENT
4 PARK PLAZA
SUITE 1600
IRVINE, CA 92614-2558

COPY MAILED

AUG 24 2006

OFFICE OF PETITIONS

In re Application of :
Mei, et al. :
Application No. 10738,968 : DECISION ON PETITION
Filed: December 16, 2003 : TO WITHDRAW
Attorney Docket No. 16693-4001 : FROM RECORD
:

This is a decision on the Request to Withdraw as attorney or agent of record under 37 C.F.R. § 1.36(b), filed January 17, 2006.

The request is **DISMISSED.**

A grantable request to withdraw as attorney/agent of record must be signed by every attorney/agent seeking to withdraw or contain a clear indication that one attorney is signing on behalf of another/others. A request to withdraw will not be approved unless at least 30 (thirty) days would remain between the date of approval and the later of the expiration date of a time to file a response or the expiration date of the maximum time period which can be extended under 37 C.F.R. § 1.136(a).

The request cannot be approved because no reasons for withdrawal have been provided. The Office cannot, at this time, determine whether practitioner's request is one of the mandatory or permissive reasons enumerated in 37 CFR 10.40. Any subsequent requests must include reasons for withdrawal. Please note that there is a space provided for on PTO/SB/83 (Request to Withdraw as Attorney or Agent) to supply practitioner's reasons.

All future communications from the Office will continue to be directed to the above-listed address until otherwise notified by applicant.

Telephone inquiries concerning this decision should be directed to April Wise at 571-272-1642.

April M. Wise
Petitions Examiner
Office of Petitions

cc: Screampoint LLC
168 Townsend Street
San Francisco, CA 94107

UNITED STATES PATENT AND TRADEMARK OFFICE

Commissioner for Patents
United States Patent and Trademark Office
P.O. Box 1450
Alexandria, VA 22313-1450
www.uspto.gov

SANDRA P. THOMPSON, PHD
BUCHALTER NEMER
18400 VON KARMAN AVE
SUITE 800
IRVINE CA 92612

COPY MAILED

NOV 17 2009

OFFICE OF PETITIONS

In re Application of :
Hsaio Lai Sean MEI, et al :
Application No. 10/738,968 : DECISION ON PETITION
Filed: December 16, 2003 :
Attorney Docket No. 45393.00002 :

This is a decision on the petition under the unintentional provisions of 37 CFR 1.137(b), filed September 17, 2009, to revive the above-identified application.

The petition is **GRANTED**.

The application became abandoned for failure to reply in a timely manner to the non-final Office action mailed, February 27, 2009, which set a shortened statutory period for reply of three (3) months. No extensions of time under the provisions of 37 CFR 1.136(a) were obtained. Accordingly, the application became abandoned on May 28, 2009.

The petition satisfies the requirements of 37 CFR 1.137(b) in that petitioner has supplied (1) the reply in the form of an amendment, (2) the petition fee of $810 and (3) the required statement of unintentional delay.

Telephone inquiries concerning this decision should be directed to the undersigned at (571) 272-6735.

This application is being referred to Technology Center AU 2123 for appropriate action by the Examiner in the normal course of business on the reply received September 17, 2009.

/Diane C. Goodwyn/
Diane C. Goodwyn/
Petitions Examiner
Office of Petitions

UNITED STATES PATENT AND TRADEMARK OFFICE

Commissioner for Patents
United States Patent and Trademark Office
P.O. Box 1450
Alexandria, VA 22313-1450
www.uspto.gov

STEINER NORRIS
2320 SECOND AVENUE
SUITE 2000
SEATTLE, WA 98121

COPY MAILED

FEB 21 2006

OFFICE OF PETITIONS

In re Application of	:	
Al Chase et al	:	
Application No. 10/738,969	:	ON PETITION
Filed: December 16, 2003	:	
Attorney Docket No. PE1-020	:	

This is a decision on the petition under 37 CFR 1.137(b), filed December 7, 2005, to revive the above-identified application.

The petition is **GRANTED**.

The above-identified application became abandoned for failure to reply within the meaning of 37 CFR 1.113 in a timely manner to the final Office action mailed May 6, 2005, which set a shortened statutory period for reply of three (3) months. No extensions of time under the provisions of 37 CFR 1.136(a) were obtained. Accordingly, the above-identified application became abandoned on August 7, 2005.

The petition satisfies the conditions for revival pursuant to the provisions of 37 CFR 1.137(b) in that (1) the reply in the form of a Request for Continued Examination (RCE); (2) the petition fee; and (3) the required statement of unintentional delay have been received. Accordingly, the reply to the final Office action of May 6, 2005 is accepted as having been unintentionally delay.

Telephone inquiries concerning this decision should be directed to Wan Laymon at (571) 272-3220.

This matter is being referred to Technology Center AU 3721.

Wan Laymon
Petitions Examiner
Office of Petitions

UNITED STATES PATENT AND TRADEMARK OFFICE

Commissioner for Patents
United States Patent and Trademark Office
P.O. Box 1450
Alexandria, VA 22313-1450
www.uspto.gov

BURNS DOANE SWECKER & MATHIS L L P
POST OFFICE BOX 1404
ALEXANDRIA VA 22313-1404

COPY MAILED

MAY 17 2004

OFFICE OF PETITIONS

In re Application of :
Fernfors et al. : DECISION ON PETITION
Application No. 10/739,032 :
Filed: December 19, 2003 :
Attorney Docket No. 018798-189 :

This is a decision on the petition under 37 CFR 1.53(e) filed April 5, 2004, requesting that the above-identified application be accorded a filing date of December 19, 2003.

The application was deposited on December 19, 2003, without drawings. On March 29, 2004, the Office of Initial Patent Examination mailed a "Notice Of Incomplete," requiring drawings of applicant's invention and stating that the filing date would be the date of receipt of the omitted drawings.

On April 5, 2004, applicant filed the present petition and five sheets of drawings, consisting of Figures 1-5. The specification filed on December 19, 2003, describes drawings containing Figures 1-5. Applicant acknowledges that the application was submitted without the requisite drawings. However, applicant contends that the application as filed specifically incorporated by reference Application No. 60/434,652, filed December 20, 2002. Applicant asserts that Figures 1-5 of the present application are identical to Figures 1-5 in Application No. 60/434,652.

A search of the official file reveals that on December 19, 2003, a specification was filed, which states: "This application claims the benefit under 35 U.S.C. 119(e) of U.S. provisional application 60/434,652, filed on December 20, 2002, the entire contents of which is incorporated by reference."

Section 201.06(c) of the Manual for Patent Examining Procedure permits the entering of a portion of the prior application into a

continuation or divisional application when the portion of the prior application was inadvertently omitted from the continuation or divisional application. Based on applicant's representation that Figures 1-5 supplied with the present petition constitute a copy of the prior application papers, and the incorporation by reference statement appearing in the specification deposited on December 19, 2003, it is appropriate, on petition, to accord the application the requested filing date with five sheets of drawings (Figures 1-5).

Accordingly, the petition is **granted**.

Counsel's deposit account will not be credited the $130.00 petition fee set forth in 37 CFR 1.17(h), because the petition was required to accord the application the requested filing date.

The application is being forwarded to the Office of Initial Patent Examination for further processing with a filing date of December 19, 2003, using the application papers filed on that date and the copy of five sheets of drawings (Figures 1-5) submitted with the present petition.

Telephone inquiries specific to this matter should be directed to the undersigned at (703) 306-5589.

Christina L. Donnell

Christina Tartera Donnell
Senior Petitions Attorney
Office of Petitions

UNITED STATES PATENT AND TRADEMARK OFFICE

Pet. Dec.

COMMISSIONER FOR PATENTS
UNITED STATES PATENT AND TRADEMARK OFFICE
P.O. BOX 1450
ALEXANDRIA, VA 22313-1450
www.uspto.gov

JUN 29 2004

VP
PAPER NO. ___

In re Application of
Riley N. Kinman
Serial Number: 10/739,040
Filed: December 19, 2003
For: MAGERLE METAL WASTE RECOVERY PROCESS

PETITION UNDER
M.P.E.P.708.02 IV

This is in response to the petition filed December 19, 2003, requesting that the above-identified application be granted Special Status under Section 708.02 IV of the MPEP and 37 CFR 1.102(c) (**no fee required**).

The request for Special Status considered under Section 708.02 IV of the MPEP is granted because criteria under 37 CFR 1.102(c) has been met.

Accordingly the petition is **GRANTED.**

Marian C Knode

Marian C. Knode, Special Programs Examiner
Technology Center 1700
Chemical and Materials Engineering

Richard C. Litman
LITMAN LAW OFFICES, LTD.
P.O. Box 15035
Arlington VA 22215

UNITED STATES PATENT AND TRADEMARK OFFICE

COMMISSIONER FOR PATENTS
UNITED STATES PATENT AND TRADEMARK OFFICE
P.O. BOX 1450
ALEXANDRIA, VA 22313-1450
www.uspto.gov

SMART & BIGGAR
P.O. BOX 2999, STATION D
900-55 METCALFE STREET
OTTAWA ON K1P5Y-6 CA CANADA

COPY MAILED

JUN 14 2006

OFFICE OF PETITIONS

Applicant: Jia et al.
Appl. No.: 10/739,044
Filing Date: December 19, 2003
Title: INTERFERENCE-WEIGHTED COMMUNICATION SIGNAL PROCESSING SYSTEMS AND METHODS
Attorney Docket No.: 71493-1212/wfs
Pub. No.: US 2005/0135492 A1
Pub. Date: June 23, 2005

This is a decision on the request for corrected of patent application publication under 37 CFR 1.221(b), filed on August 22, 2005, for the above-identified application

The request is granted-in-part.

Applicant requests that the application be republished because the patent application publication contains material errors in the formulas in claims 21, 27, 32 and 34.

37 CFR 1.221(b) is applicable "only when the Office makes a material mistake which is apparent from Office records . . . Any request for a corrected publication or revised patent application publication other than provided as provided in paragraph (a) of this section must be filed within two months from the date of the patent application publication. This period is not extendable." A material mistake must affect the public's ability to appreciate the technical disclosure of the patent application publication, to determine the scope of the patent application publication, or to determine the scope of the provisional rights that an applicant may seek to enforce upon issuance of a patent.[1]

The instant request identifies a material mistake by the Office with respect to the claim 21, line 17, wherein "-" is misprinted as a "+" will be corrected. The request also includes mistakes that are not material errors by the Office, which will not be corrected by a corrected publication by the Office.

The first error alleged in claim 21, will not be corrected as requested, as the formula was printed correctly. The errors noted by requestor in claims 27, 32 and 34 with respect to the superscripts and subscripts are not material Office errors under 37 CFR 1.221. The errors noted by requestor

[1]Changes to Implement Eighteen-Month Publication of Patent Applications, 65 FR 57023, 57038 (Sept. 20, 2000), 1239 Off. Gaz. Pat. Office Notices 63, 75 (Oct. 10, 2000) (final rule).

with respect to the typographical errors in this published application are due to the poor quality of the text in the application. Some of the text in the chemical formula such as the subscripts and superscripts are very small and faint. The text of the application must be written by either a typewriter or machine printed in dark ink. See 37 CFR 1.52. While the text is legible, the text is not clear, as the text of the subscripts and superscripts is very small, which makes it difficult to electronically reproduce by digital imaging and optical character recognition.

Applicants have been advised to file applications having larger text, which is cleaner and with sufficient clarity and contrast to permit reproduction to avoid errors in the patent application publication process. See 37 CFR 1.52. When, the text in the application, which is small and close together, which makes it blurry and not clear, also makes it difficult to read and to electronically reproduce by digital imaging and optical character recognition.

The request does not clearly point out where the errors occur in the published application, in the future applicant should clearly point out where the errors occur in the published application and provide an indication where the correct text for the material errors appears in the application. A request for corrected publication need only point out what was printed incorrectly in the application, where the error occurs in the publication and where the correct text is found in the application papers. Marked up relevant copies of the applications papers and the pre-grant publication may facilitate processing of the request. If it is not clear why the error is a material error, further explanation may be warranted.

The applicant is advised that a "request for republication of an application previously published" may be filed under 37 CFR 1.221(a). Such a request for republication "must include a copy of the application in compliance with the Office's electronic filing system requirements and be accompanied by the publication fee set forth in § 1.18(d) and the processing fee set forth in § 1.17(i)." If the request for republication does not comply with the electronic filing system requirements, the republication will not take place and the publication fee set forth in § 1.18(d) will be refunded. The processing fee will be retained.

Any request for republication under 37 CFR 1.221(a), must be submitted via the EFS system and questions or request for reconsideration of the decision, should be addressed as follows:

By mail to: Mail Stop PGPUB
Commissioner for Patents
P.O. Box 1450
Alexandria, Va. 22313-1450

By facsimile: 571-273-8300

Inquiries relating to this matter may be directed to Mark Polutta at (571) 272-7709.

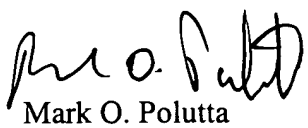

Mark O. Polutta
Office of Patent Legal Administration
Office of the Deputy Commissioner
for Patent Examination Policy

UNITED STATES PATENT AND TRADEMARK OFFICE

Commissioner for Patents
United States Patent and Trademark Office
P. O. Box 1450
Alexandria, VA 22313-1450
www. uspto. gov

SIEMENS SCHWEIZ
I-44, INTELLECTUAL PROPERTY
ALBISRIEDERSTRASSE 245
ZURICH CH-80-47 CH
SWITZERLAND

COPY MAILED

MAY 2 3 2005

OFFICE OF PETITIONS

In re Application of :
Peter Wiese :
Application No. 10/739,052 : ON PETITION
Filed: December 19, 2003 :
Attorney Docket No. 2001P80095WOUS :

This is a decision on the petition under 37 CFR 1.137(b), filed April 22, 2005, to revive the above-identified application.

The petition is **GRANTED**.

The above-identified application became abandoned for failure submit the Issue fee in a timely manner in reply to the Notice of Allowance mailed October 15, 2004, which set a statutory period for reply of three (3) months. Accordingly, the above-identified application became abandoned on January 16, 2005.

Telephone inquiries concerning this decision should be directed to Irvin Dingle at (571) 272-3210.

This matter is being referred to the Publishing Division.

Irvin Dingle
Petitions Examiner
Office of Petitions
Office of the Deputy Commissioner
for Patent Examination Policy

UNITED STATES PATENT AND TRADEMARK OFFICE

Commissioner for Patents
United States Patent and Trademark Office
P.O. Box 1450
Alexandria, VA 22313-1450
www.uspto.gov

Paper No.

SIEMENS SCHWEIZ
I-44, INTELLECTUAL PROPERTY
ALBISRIEDERSTRASSE 245
ZURICH CH-8047
SWITZERLAND

COPY MAILED

AUG 2 6 2004

OFFICE OF PETITIONS

In re Application of :
Kirner et al. :
Application No. 10/739,053 : DECISION ON PETITION
Deposited: December 19, 2003 :
Attorney Docket No. 2001P20207WOUS :

This is in response to the papers filed July 13, 2004, which state that a "PETITION FOR ACCORDATION OF FILING DATE," has been filed.

Application papers in the above-identified application were filed on December 19, 2003. However, on June 24, 2004, the Initial Patent Examination Division (IPED) mailed a "Notice of Incomplete Nonprovisional Application," notifying applicants that the application papers had not been accorded a filing date because the application was deposited without drawings as required by 35 U.S.C. 113. In addition, an executed oath or declaration in compliance with 1.63 was missing.

On July 13, 2004, applicants filed the instant petition. Applicants maintain that the application as filed on December 19, 2003, included three (3) sheets of drawings. In support thereof, applicants submitted a copy of their return postcard receipt.

The application file is the Official record of the papers filed in an application. A review of the Official record of the application as filed reveals that no drawings were present on filing as no such drawings are present in the application file. (The drawings present in the application file were filed on March 15, 2004). An applicant alleging that a paper was filed in the Office and later misplaced has the burden of proving the allegation by a preponderance of the evidence. Petitioner has not met that burden.

A postcard receipt which itemizes and properly identifies the items which are being filed serves as *prima facie* evidence of receipt in the USPTO of all the items listed thereon on the date stamped thereon by the USPTO. However, the postcard receipt will not serve as *prima facie* evidence of receipt of any item which is not adequately itemized on the postcard. See MPEP 503. Here, applicants submit a copy of a return postcard, which they admit erroneously indicates that 6 sheets of drawings were present in

the application on filing. Given the error in the postcard, it cannot be concluded that this postcard serves as *prima facie* evidence that 3 sheets of drawings were present in the application on filing. In view thereof, it is concluded that petitioner has not shown that drawings were among the papers filed on December 19, 2003.

However, a review of the application-as-filed reveals that it contained the incorporation by reference statement, incorporating the entire disclosure of prior application No. PCT/DE02/02083. MPEP 201.06 provides in, pertinent part, that:

> Material needed to accord an application a filing date may not be incorporated by reference. Therefore, if a continuation or divisional application as originally filed incorporates by reference material omitted from the application papers, which is needed to accord the application a filing date, the application will not be entitled to a filing date. A petition under 37 CFR 1.182 and the required petition fee, including an amendment submitting the necessary omitted material, requesting that the necessary omitted material contained in the prior application and submitted in the amendment, be included in the continuation or divisional application based upon the incorporation by reference statement, is required in order to accord the application a filing date as of the date of deposit of the continuation or divisional application. An amendment submitting the omitted material and relying upon the incorporation by reference will not be entered in the continuation or divisional application unless a decision granting the petition states that the application is accorded a filing date and that the amendment will be entered.

The instant petition may be treated under § 1.182 to accord the application a filing date based on the incorporation by reference statement. However, such a petition is not currently grantable. Petitioner has not filed the preliminary amendment submitting the omitted material as required. Further, it is not clear whether petitioner has submitted the omitted material pursuant to this provision. Drawings were filed on March 15, 2004. However, the accompanying preliminary amendment does not reference the drawings. More importantly, it is unclear whether these drawings are true copies of the drawings from prior application No. PCT/DE02/02083.

Accordingly, the petition under § 1.182 is **DISMISSED** without prejudice to reconsideration upon the timely filing of the necessary omitted material and preliminary amendment. As the papers containing the omitted material are required to accord a filing date, they may not be filed by facsimile. See 37 CFR 1.8(a)(2)(i)(A).

Any request for reconsideration should be styled "Renewed Petition under § 1.182" and must be filed within **TWO (2) MONTHS** of the date of this decision in order to be considered timely. See 37 CFR 1.181(f). This time period may not be extended pursuant to 37 CFR 1.136(a) or (b).

Receipt of the declaration filed July 12, 2004 is acknowledged.

Further correspondence with respect to this decision should be addressed as follows:

By mail: Mail Stop Petition
Commissioner for Patents
P.O. Box 1450
Alexandria, VA 22313-1450

By hand: Effective June 5, 2004, patent correspondence delivered by hand or delivery services, **other than the USPS**, to the Customer Window must be addressed as follows:

U.S. Patent and Trademark Office
220 20th Street S.
Customer Window, Mail Stop _____
Crystal Plaza Two, Lobby, Room 1B03
Arlington, VA 22202

Telephone inquiries related to this decision may be directed to the undersigned at (703) 305-0309 (or effective September 28, 2004 at (571) 272-3219).

Nancy Johnson
Senior Petitions Attorney
Office of Petitions

UNITED STATES PATENT AND TRADEMARK OFFICE

Commissioner for Patents
United States Patent and Trademark Office
P.O. Box 1450
Alexandria, VA 22313-1450
www.uspto.gov

Joseph W. Berenato, III
Liniak, Berenato & White, LLC
Suite 240
6550 Rock Spring Drive
Bethesda MD 20817

COPY MAILED
JUN 16 2006
OFFICE OF PETITIONS

In re Application of :
MARSHALL :
Application No. 10/739,080 : DECISION ON PETITION
Filed: December 19, 2003 : TO WITHDRAW
Attorney Docket No. 6247.460 : FROM RECORD
:

This is a decision on the Request to Withdraw as attorney or agent of record under 37 C.F.R. § 1.36(b), filed January 5, 2006.

The request is **APPROVED**.

A grantable request to withdraw as attorney/agent of record must be signed by every attorney/agent seeking to withdraw or contain a clear indication that one attorney is signing on behalf of another/others. A request to withdraw will not be approved unless at least 30 (thirty) days would remain between the date of approval and the later of the expiration date of a time to file a response or the expiration date of the maximum time period which can be extended under 37 C.F.R. § 1.136(a).

The request was signed by Thomas P. Liniak. Thomas Liniak has been withdrawn as an attorney of record; all other attorneys remain of record.

The correspondence address of record remains unchanged.

The request for continued examination and the amendment filed February 1, 2006 will be forwarded to Group Art Unit 3632 for consideration.

Telephone inquiries concerning this decision should be directed to the undersigned at 571-272-4787.

Denise Pothier
Petitions Examiner
Office of Petitions

UNITED STATES PATENT AND TRADEMARK OFFICE

Commissioner for Patents
United States Patent and Trademark Office
P.O. Box 1450
Alexandria, VA 22313-1450
www.uspto.gov

MAILED

MAY 10 2004

Director's Office
Group 3700

Thomas H. Sharpe
55 Dorr Drive
North Augusta, GA 29841

In re application of
Thomas H. Sharpe

Serial Number: 10/739082
Filed: December 19, 2003

DECISION ON PETITION TO MAKE SPECIAL UNDER 37 CFR. 1.102(c)

For: **TURBINELESS JET ENGINE**

This is a decision on the petition filed on December 19, 2003, under 37 CFR. 1.102(c) to make special the above identified application because of the age/health of the applicant. Since the requirements of the M.P.E.P Section 708.02 IV have been met, the petition will be GRANTED.

The examiner is directed (1) to make an interference search for possible interfering applications, (2) to promptly examine this application out of turn, and (3) if any interfering application is discovered, to examine such application simultaneously and state in the first official letter of such application that it is being taken out of turn because of a possible interference.

Petitioner is advised that this application will continue to be special, throughout its entire prosecution and pendency, including interference or appeal, if any, only is Petitioner makes a prompt bona-fide effort, in response to each Office action, to place the application in condition for allowance, even if it is necessary to conduct an interview with the Examiner to accomplish this purpose.

Summary: Decision on Petition **GRANTED**.

/Richard A Bertsch/

Richard A. Bertsch
Director
Technology Center 3700
(703) 308-0975

rt: 5/7/04

UNITED STATES PATENT AND TRADEMARK OFFICE

Commissioner for Patents
United States Patent and Trademark Office
P.O. Box 1450
Alexandria, VA 22313-1450
www.uspto.gov

ERIC ROBINSON
PMB 955/21010 SOUTHBANK ST.
POTOMAC FALLS VA 20165

COPY MAILED

AUG 2 8 2008

OFFICE OF PETITIONS

In re Application of :
YAMAZAKI, et al. :
Application No. 10/739,084 : DECISION GRANTING PETITION
Filed: December 19, 2003 : UNDER 37 CFR 1.313(c)(2)
Attorney Docket No. 0756-7232 :

This is a decision on the petition under 37 CFR 1.313(c)(2), filed August 26, 2008, to withdraw the above-identified application from issue after payment of the issue fee.

The petition is GRANTED.

The above-identified application is withdrawn from issue for consideration of a submission under 37 CFR 1.114 (request for continued examination). *See* 37 CFR 1.313(c)(2).

Petitioner is advised that the issue fee paid on July 14, 2008 *cannot be refunded. If, however, this application is again allowed, petitioner may request that it be applied towards the issue fee required by the new Notice of Allowance.*[1]

Telephone inquiries should be directed to the undersigned at (571) 272-7253.

This application is being referred to Technology Center AU 2871 for processing of the request for continued examination under 37 CFR 1.114 and for consideration of the concurrently filed information disclosure statement and amendment.

Monica A. Graves
Petitions Examiner
Office of Petitions

[1] *The request to apply the issue fee to the new Notice may be satisfied by completing and returning the new Part B – Fee(s) Transmittal Form (along with any balance due at the time of submission). Petitioner is advised that the Issue Fee Transmittal Form must be completed and timely submitted to avoid abandonment of the application.*

SPE RESPONSE FOR CERTIFICATE OF CORRECTION

Paper No.:1

DATE : February 16, 2007

TO SPE OF : ART UNIT 2831

SUBJECT : Request for Certificate of Correction on Patent No.: 6,853,536

A response is requested with respect to the accompanying request for a certificate of correction.

Please complete this form and return with file, within **7** days to:
Certificates of Correction Branch - PK 3-910
Palm location **7590** - Tel. No. 305-8201

With respect to the change(s) requested, correcting Office and/or Applicant's errors, should the patent read as shown in the certificate of correction? No new matter should be introduced, nor should the scope or meaning of the claims be changed.

Thank You For Your Assistance **Certificates of Correction Branch**

The request for issuing the above-identified correction(s) is hereby:
Note your decision on the appropriate box.

☒ **Approved** **All** changes apply.

☐ **Approved in Part** Specify below which changes **do not** apply.

☐ **Denied** State the reasons for denial below.

Comments:

SPE: Dean Reichard **Art Unit** 2831

UNITED STATES PATENT AND TRADEMARK OFFICE

Commissioner for Patents
United States Patent and Trademark Office
P.O. Box 1450
Alexandria, VA 22313-1450
www.uspto.gov

Ronald P. Kananen
Rader, Fishman & Grauer PLLC
Lion Building
1233 20th Street, NW
Washington, DC 20036

COPY MAILED

SEP 0 3 2004

OFFICE OF PETITIONS

In re Application of :
Watanabe et al. :
Application No. 10/739,108 : ON PETITION
Filed: December 19, 2003 :
Attorney Docket No. SON-02059/DIV :

This is a decision on the petition filed April 22, 2004, which is being treated as a petition under 37 CFR 1.53. The petition requests, in effect, that pages 25-36 of the specification filed on April 22, 2004, be entered as part of the original disclosure.

The petition is **dismissed**.

The instant decision is not a determination that the missing pages were not filed on December 19, 2003. Instead, the instant decision is a determination that the evidence currently of record fails to prove by a preponderance of the evidence, that the pages were filed on December 19, 2003. An applicant alleging that a paper was filed in the USPTO and later misplaced has the burden of proving the allegation by a preponderance of the evidence.

Although relief cannot be granted in response to the instant petition, petitioner should be able to obtain entry of the pages via an amendment to this divisional application.

The Office allows an applicant to rely upon an incorporation by reference of a parent application when a portion of the child application has been inadvertently omitted.

It is noted that the application transmittal letter identified this application as a divisional of prior application No. 09/794,004 and specifically incorporated by reference the disclosure of the prior application. MPEP 201.06(c) states that:

> . . . an applicant may incorporate by reference the prior application by including, in the application-as-filed, a statement that such specifically enumerated prior application or applications are "hereby incorporated herein by reference." The statement may appear in the specification or in the application transmittal letter. The inclusion of this incorporation by reference of the prior application(s) will permit an applicant to amend the continuing application to include any subject matter in such prior application(s), without the need for a petition provided the continuation or divisional application is entitled to a filing date notwithstanding the incorporation by reference. . . .
>
> If a continuation or divisional application as originally filed is entitled to a filing date despite the omission of a portion of the prior application(s), applicant will be permitted to add the omitted material by way of an amendment provided a statement was included in the application as originally filed that incorporates by reference the prior application(s). If the application as originally filed includes a proper incorporation by reference of the prior

> application(s), an omitted specification page(s) and/or drawing figure(s) identified in a "Notice of Omitted Item(s)" may be added by amendment provided the omitted item(s) contains only subject matter in common with such prior application(s). In such case, applicant need not respond to the "Notice of Omitted Item(s)." Applicant should submit the amendment adding the omitted material prior to the first Office action to avoid delays in the prosecution of the application. See MPEP § 601.01(d) and § 601.01(g).

If petitioner desires for the examiner to consider the missing pages which were not submitted as part of the original disclosure, then petitioner may submit those pages as an amendment. Any such amendment will, of course, be reviewed by the examiner for new matter. See MPEP 608.02(a). The amendment is not new matter if the substance was a part of the disclosure of the prior application.

Although relief may be available via amendment, relief cannot be obtained by petition since the instant petition cannot be granted.

The application was filed on December 19, 2003.

On March 29, 2004, the Office of Initial Patent Examination mailed a "Notice of Omitted Item(s)" stating that the application had been accorded a filing date of December 19, 2003, and advising applicants that pages 25 to 36 of the specification appeared to have been omitted.

In response, the present petition was filed. Petitioner alleges pages 25-36 of the specification were filed with the original application.

The last portion of MPEP 513 states,

> Where there is a dispute as to the contents of correspondence submitted to the Office (e.g., an applicant asserts that three sheets of drawings were submitted under 37 CFR 1.10 with an application, but the Office records indicate receipt of only two sheets of drawings with the application) ... The Office will rely upon its official record of the contents of such correspondence in absence of convincing evidence (e.g. a postcard receipt . . . .

MPEP 503 states (emphasis added),

> The identifying data on the postcard should include:
> (A) applicant's name(s);
> (B) title of invention;
> (C) **number of pages of specification, claims (for nonprovisional applications), and sheets of drawing;**
> (D) whether oath or declaration is included;
> (E) a list of any additional forms included with the application (e.g., application transmittal form, application data sheet, fee transmittal form, and /or provisional application cover sheet); and
> (F) amount and manner of paying the fee.
>
> . . . .
>
> It is important that the return postcard itemize all of the components of the application. **If the postcard does not itemize each of the components of the application, it will not serve as evidence that any component which was not itemized was received by the United States Patent and Trademark Office (USPTO).** . . . .

A postcard receipt which itemizes and properly identifies the items which are being filed serves as prima facie evidence of receipt in the USPTO of all the items listed thereon on the date stamped thereon by the USPTO.

The identifying data on the postcard should be so complete as to clearly identify the item for which receipt is requested. For example, the postcard should identify the applicant's name, application number (if known), confirmation number (if known), filing date, interference number, title of the invention, etc. **The postcard should also identify the type of paper being filed**, e.g., new application, affidavit, amendment, notice of appeal, appeal brief, drawings, fees, motions, supplemental oath or declaration, petition, etc., **and the number of pages being submitted.** If a new application is being filed, all parts of the application being submitted should be separately listed on the postcard, e.g., **the number of pages of specification (including written description, claims and abstract), number of claims, number of sheets of drawings, number of pages of oath/declaration, number of pages of cover sheet (provisional application).**

The postcard receipt will not serve as prima facie evidence of receipt of any item which is not adequately itemized on the postcard. For example, merely listing on the postcard "a complete application" or "patent application" will not serve as a proper receipt for each of the required components of an application (e.g., specification (including claims), drawings (if necessary), oath or declaration and the application filing fee) or missing portions (e.g., pages, sheets of drawings) of an application if one of the components or portion of a component is found to be missing by the USPTO. Each separate component should be specifically and properly itemized on the postcard.

While petitioner apparently believes that pages 25-36 of the specification were filed on December 19, 2004, the file[1] shows that the pages were not received, since no such papers are present in the file. An applicant alleging that a paper was filed in the USPTO and later misplaced has the burden of proving the allegation by a preponderance of the evidence. In this regard, declarations by individuals involved in the preparation and filing of the original application reciting their personal recollection or belief of what was contained in the application that they reviewed are generally not more persuasive of what was actually filed in the USPTO than the contents of the application file. Such declarations are usually made weeks or months after the actual events recited. Ms. Talarek states that her initials on the postcard verifies that she verified the application including the papers on the postcard. The Office did receive papers corresponding to the items listed on the postcard. The only issue is the number of pages which should have been present for each item. To the extent the petition relies on Ms. Talarek's business routine to verify the allegations, the Office can likewise rely on business routines at the Office in place to ensure papers are not lost. The declaration does not have more probative value than the official government record of what was actual received in the USPTO on December 19, 2003.

Petitioner has demonstrated an intent to file the pages and a belief the pages were filed. However, the current evidence fails to establish the pages were actually filed. Unfortunately, patent applicants and their representatives, who intend to file complete applications, occasionally file applications which are missing one or more pages, due to clerical error, a copying machine error (such as papers sticking together), papers falling out of a file, or another reason. A demonstration of an intent to included a page or pages, or a belief that the pages were filed, does not establish the actual receipt of such pages by the Office.

---

[1] The file contains the actual papers received and the file is an official government record prepared and maintained by disinterested USPTO employees as a part of their customary and usual duties.

The pages submitted with the petition will not be entered. Should petitioner wish for the pages to be entered, an amendment must be filed.

An amendment to the specification deleting references to the missing pages should be filed prior to the first USPTO action in order to avoid further delays in the examination of the application. In the alternative, if petitioner desires for the examiner to consider pages which were not submitted as part of the original disclosure, then petitioner may seek to submit some or all of those pages as an amendment. Any such amendment will, of course, be reviewed by the examiner for new matter. See MPEP 608.02(a).

The petition fee of $130 will be charged to petitioner's deposit account.

The Office of Initial Patent Examination will be notified to further process the application with a filing date of December 19, 2003, using only the papers filed on that date. The Office notes that an employee in the Office of Initial Patent Examination has *incorrectly* changed the filing date to April 22, 2004, in Office records even though a petition under 37 CFR 1.182 requesting a later filing date has not been filed. The Office of Initial Patent Examination will take steps to correct the error and to ensure the filing date is correctly shown as December 19, 2003.

Telephone inquiries may be directed to Petitions Attorney Steven Brantley at (703) 306-5683 prior to September 27, 2004, and (571) 272-3203 thereafter.

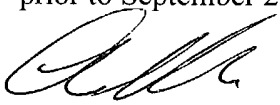

Charles Steven Brantley
Senior Petitions Attorney
Office of Petitions

SPE RESPONSE FOR CERTIFICATE OF CORRECTION

Paper No.: _____

DATE : 07-01-08

TO SPE OF : ART UNIT 3726

SUBJECT : Request for Certificate of Correction for Appl. No.: 10/739146 Patent No.: 7162785

Please respond to this request for a certificate of correction within 7 days.

Please review the requested changes/corrections as shown in the **COCIN** document(s) in the IFW application image. No new matter should be introduced, nor should the scope or meaning of the claims be changed.

Please complete the response (see below) and forward the completed response to scanning using document code **COCX**.

Angela Green
Certificates of Correction Branch
703.308.9380 ext. 123

Thank You For Your Assistance

The request for issuing the above-identified correction(s) is hereby:
Note your decision on the appropriate box.

☐ **Approved**	**All** changes apply.
☒ **Approved in Part**	Specify below which changes **do not** apply.
☐ **Denied**	State the reasons for denial below.

Comments: (1) Drawing correction is not necessary - correction was made in drawings filed 12/19/03. (2) Col 4, line 33, change from "The" to --The numerals-- is incorrect because there is no "The" present. Apparently applicant meant line 35. However, that change has already been made.

DAVID P. BRYANT
SUPERVISORY PATENT EXAMINER

David Bryant 7/9/08
SPE

3726
Art Unit

UNITED STATES PATENT AND TRADEMARK OFFICE

Commissioner for Patents
United States Patent and Trademark Office
P.O. Box 1450
Alexandria, VA 22313-1450
www.uspto.gov

BIRCH STEWART KOLASCH & BIRCH
PO BOX 747
FALLS CHURCH, VA 22040-0747

COPY MAILED

AUG 0 3 2004

OFFICE OF PETITIONS

In re Application of :
Ichikawa, et al. :
Application No. 10/739,149 : ON PETITION
Filed: December 19, 2003 :
Attorney Docket No. 2830-0147P :

This is a decision on the papers styled, "Petition To Accept Earlier Filing Date," filed June 24, 2004, which has been treated as a petition under 37 CFR 1.53, requesting that the above-identified application be accorded a filing date of December 19, 2003, including twenty-one (21) pages of specification and ten (10) sheets of drawings.

The application was submitted on December 19, 2003. However, on April 28, 2004, the Office of Initial Patent Examination (OIPE) mailed a "Notice Of Incomplete Nonprovisional Application" that stated the application had not been accorded a filing date, and that the specification is missing and the application was deposited without drawings.

In response, on June 24, 2004, the present petition was filed wherein petitioner argues that twenty-one (21) pages of specification and ten (10) sheets of drawings were filed on December 19, 2003. The papers were accompanied by a copy of applicant's postcard receipt that acknowledges receipt of twenty-one (21) pages of specification and ten (10) sheets of drawings on December 19, 2003. A review of the application file indicates the presence of zero (0) pages of specification and zero (0) sheets of drawings. It is assumed that missing pages of specification and sheets of drawings were misplaced by the Office.

In view of the above, the petition is granted.

The $130.00 petition fee will be refunded to deposit account no. 02-2448.

This application will be returned to OIPE for further processing with a filing date of December 19, 2003, using the twenty-one (21) pages of specification (and the English translation submitted of the same) and ten (10) sheets of drawings, supplied on June 24, 2004.

Telephone inquiries concerning this matter may be directed to the undersigned at (703) 306-9200.

Edward J. Tannouse
Petitions Attorney
Office of Petitions
United States Patent and Trademark Office

UNITED STATES PATENT AND TRADEMARK OFFICE

Commissioner for Patents
United States Patent and Trademark Office
P.O. Box 1450
Alexandria, VA 22313-1450
www.uspto.gov
DIW 10-04

BIRCH STEWART KOLASCH & BIRCH
PO BOX 747
FALLS CHURCH VA 22040-0747

COPY MAILED

OCT 0 6 2004

OFFICE OF PETITIONS

In re Application of :
Ichikawa et al. :
Application No. 10/739,151 : DECISION GRANTING PETITION
Filed: 19 December, 2003 :
Attorney Docket No. 2830-0149P :

This is a decision on the petition filed on 28 June, 2004, requesting that the application be accorded a filing date of 19 December, 2003, with a complete specification, including three (3) claims, as a part of the original disclosure.

The petition is **GRANTED**

The application was filed on 19 December, 2003. On 27 April, 2004, the Office of Initial Patent Examination (OIPE) mailed a "Notice of Incomplete Nonprovisional Application" stating that application was missing a complete specification including at least one claim as prescribed by 35 U.S.C. § 111, and that the filing date would be the date of receipt of a complete specification including at least one claim were received in the Office. A two (2) month period for reply was set. On 28 June, 2004, petitioners filed 36 pages of specification, including three (3) claims and one (1) page of abstract.

The present petition asserts that a complete specification, including three (3) claims, and 14 sheets of drawings, in Japanese, was present in the application papers deposited on 19 December, 2003. The petition is accompanied by a specification in English of 36 pages, including three (3) claims, and one (1) page of abstract; two copies of 14 sheets of drawings, and a declaration by Kazuya Hagino stating that the English translation is a "true and correct" translation of the Japanese document.

The Japanese language specification filed on 19 December, 2003, has been located in the file. Accordingly, the "Notice" mailed on 27 April, 2003, was mailed in error and is hereby vacated. The petition fee will be refunded to counsel's deposit account, No. 02-2448, as authorized in the present petition.

The declaration of Kazuya Hagino stating that the English translation is a true and correct translation of the Japanese specification is being construed as a statement that the translation is accurate as required by MPEP 608.01. Petitioners **must** inform the Office if this is not a corrected interpretation.

The application file will be forwarded to OIPE for reprocessing with a filing date of 19 December, 2003, using the 21 pages of Japanese text as the specification and claims as the original disclosure, and an indication in Office records that three (3) claims were submitted on filing. The English copy of the specification, claims, and drawings filed with the present petition will be used for examination purposes.

Telephone inquiries specific to this matter should be directed to the undersigned at (571) 272-3231.

D Wood

Douglas I. Wood
Senior Petitions Attorney
Office of Petitions

UNITED STATES PATENT AND TRADEMARK OFFICE

Commissioner for Patents
United States Patent and Trademark Office
Washington, D.C. 20231
www.uspto.gov

BIRCH STEWART KOLASCH & BIRCH
PO BOX 747
FALLS CHURCH, VA 22040-0747

Paper No.

COPY MAILED

AUG 2 4 2004

OFFICE OF PETITIONS

In re Application of
Ichikawa et al.
Application No. 10/739,152
Filed: December 19, 2003
Attorney Docket No. 2830-0148P

DECISION ON PETITION

This is a decision on the "PETITION TO ACCEPT EARLIER FILING DATE (37 C.F.R. § 1.182)," filed June 26, 2004, requesting that the above-identified application be accorded a filing date of December 19, 2003.

Application papers in the above-identified application were filed on December 19, 2003. On April 27, 2004, the Initial Patent Examination Division (IPED) mailed a "Notice of Incomplete Nonprovisional Application," notifying applicants that the application papers had not been accorded a filing date because the application was filed without a specification and without drawings.

In response, applicants timely filed the instant petition, asserting that the application as filed included a specification consisting of 21 pages and 10 sheets of formal drawings. Applicants submitted a copy of the application as they maintain it was filed on December 19, 2003 (this included 14 sheets of formal drawings). Applicants state that, in support thereof, an itemized return postcard with an Office date-stamp thereon of December 19, 2003 is being submitted. However, no copy of the postcard was among the papers received on petition.

Nonetheless, a review of the application as filed on December 19, 2003 reveals that it included 21 pages of specification in a foreign language and 14 sheets of drawings. It is noted that the Office will accord a filing date to an application meeting the requirements of 35 U.S.C. 111(a), even though some or all of the application papers, including the written description and the claims, are in a language other than English and hence do not comply with 37 C.F.R. 1.52. Accordingly, it is concluded that, pursuant to 35 U.S.C. 111(a)(4), this application as filed on December 19, 2003 met the requirements for a filing date.

The Notice of Incomplete Application mailed April 27, 2004 was mailed in error, and is hereby **withdrawn**. Applicants should have been mailed a Notice to File Missing Parts of Application.

In view thereof, the petition is **GRANTED**.

Given the basis for granting the petition, the petition fee has been refunded to Deposit Account No. 02-2448, as authorized.

The Office of Initial Patent Examination (OIPE) has been advised of this decision. The application has, thereby, been forwarded to the Office of Initial Patent Examination (OIPE) for:

- correction of the filing date to December 19, 2003, using the application papers received in the Office on that date (including 21 pages of specification and 14 sheets of drawings).

Applicants will receive appropriate notifications regarding the fees owed, if any, and other information in due course from OIPE.

Telephone inquiries related to this decision should be directed to the undersigned at 703-305-0309.

Nancy Johnson
Senior Petitions Attorney
Office of Petitions

SPE RESPONSE FOR CERTIFICATE OF CORRECTION

Paper No.: 02-12-2007

DATE : 02/05/07

TO SPE OF : ART UNIT 1775

SUBJECT : Request for Certificate of Correction for Appl. No.: **10/739156** Patent No.: **7056571**

Please respond to this request for a certificate of correction within 7 days.

Please review the requested changes/corrections as shown in the **COCIN** document(s) in the IFW application image. No new matter should be introduced, nor should the scope or meaning of the claims be changed.

Please complete the response (see below) and forward the completed response to scanning using document code **COCX**.

Angela Green
Certificates of Correction Branch
703.308.9380 ext. 123

Thank You For Your Assistance

The request for issuing the above-identified correction(s) is hereby:
Note your decision on the appropriate box.

- ☑ **Approved** — **All** changes apply.
- ☐ **Approved in Part** — Specify below which changes **do not** apply.
- ☐ **Denied** — State the reasons for denial below.

Comments: _____

JENNIFER MCNEIL
~~SUPERVISORY PATENT EXAMINER~~
SPE 2/11/07

1775
Art Unit

UNITED STATES PATENT AND TRADEMARK OFFICE

Commissioner for Patents
United States Patent and Trademark Office
P.O. Box 1450
Alexandria, VA 22313-1450
www.uspto.gov

DECHERT, LLP
P.O. BOX 390460
MOUNTAIN VIEW, CA 94039-0460

COPY MAILED
DEC 2 4 2008

In re Application of	:	
Qun Sun, et. al.	:	
Application No. 10/739,190	:	DECISION GRANTING
Filed: December 19, 2003	:	PETITION
Attorney Docket No. 379612-215US	:	

This is a decision on the petition, filed July 20, 2007, requesting that the response filed on June 22, 2007 be accorded a filing date of June 21, 2007, rather than the presently accorded date of June 22, 2007. The petition is properly treated as a petition under 37 CFR 1.10(c).

Petitioner alleges that the response was deposited in Express Mail Service on June 21, 2007. In support, the petition is accompanied by a copy of Express Mail receipt No. EV 473971577 US (the same Express Mail number is found on the response papers located in the official file) showing a "date in" of June 21, 2007.

The Office considers the date the paper or fee is shown to have been deposited as "Express Mail" to be the "date-in" on the Express Mail label; MPEP 513. The evidence is convincing that the response was deposited as "Express Mail" with the U. S. Postal Service on June 21, 2007.

In view of the above, the petition is **GRANTED**.

This application file is being referred to Technology Center Art Unit 1624 for examination in the normal course of business.

Telephone inquiries relating to this decision should be directed to the undersigned at (571) 272-3226.

Andrea Smith
Petitions Examiner
Office of Petitions

UNITED STATES PATENT AND TRADEMARK OFFICE

Commissioner for Patents
United States Patent and Trademark Office
P.O. Box 1450
Alexandria, VA 22313-1450
www.uspto.gov

MICHAEL P. MORRIS
BOEHRINGER INGELHEIM USA CORPORATION
900 RIDGEBURY ROAD
P O BOX 368
RIDGEFIELD CT 06877-0368

COPY MAILED

JUL 20 2009

OFFICE OF PETITIONS

In re Application :
Daniel Kuzmich et al. :
Application No. 10/739,208 : DECISION ON APPLICATION
Filed: December 18, 2003 : FOR PATENT TERM ADJUSTMENT
Attorney Docket No. **09-0272** :

This is in response to the "APPLICATION FOR PATENT TERM ADJUSTMENT" filed May 29, 2009. Applicant requests that the determination of patent term adjustment be corrected from three hundred three (303) days to one thousand twenty six (1026) days. Applicant requests this correction on the basis that the Office will take in excess of three years to issue this patent and in light of the recent court decision in Wyeth v. Dudas, No. 07-1492 (D.D.C. September 30, 2008).

As the instant application for patent term adjustment requests reconsideration of the patent term adjustment as it relates to the Office's failure to issue the patent within 3 years of the filing date, a decision is being **held in abeyance** until after the actual patent date. Knowledge of the actual date the patent issues is required to calculate the amount, if any, of additional patent term patentee is entitled to for Office failure to issue the patent within 3 years. See § 1.703(b).

Applicant is given TWO (2) MONTHS from the issue date of the patent to file a written request for reconsideration of the patent term adjustment for Office failure to issue the patent within 3 years. A copy of this decision should accompany the request. Applicant may seek such consideration without payment of an additional fee. However, as to all other bases for seeking reconsideration of the patent term adjustment indicated in the patent, all requirements of § 1.705(d) must be met. Requests for reconsideration on other bases must be timely filed and must include payment of the required fee.

Rather than file the request for reconsideration of Patent Term Adjustment at the time of the mailing of the notice of allowance, applicant is advised that they may wait until

the time of the issuance of the patent and file a request for reconsideration of the patent term pursuant to 37 CFR 1.705(d). The USPTO notes that it does not calculate the amount of time earned pursuant to 37 CFR 1.702(b) until the time of the issuance of the patent and accordingly, the Office will consider any request for reconsideration of the patent term adjustment due to an error in the calculation of 37 CFR 1.702(b) to be timely if the request for reconsideration is filed within two months of the issuance of the patent.

The Office acknowledges submission of the $200.00 fee set forth in 37 CFR 1.18(e). No additional fees are required.

The application is being forwarded to the Office of Data Management for issuance of the patent. The patent term adjustment indicated on the patent (as shown on the Issue Notification mailed about three weeks prior to patent issuance) will include any additional adjustment accrued both for Office delay in issuing the patent more than four months after payment of the issue fee and satisfaction of all outstanding requirements, and for the Office taking in excess of three years to issue the patent (to the extent that the three-year period does not overlap with periods already accorded).

Telephone inquiries specific to this decision should be directed to Senior Petitions Attorney Patricia Faison-Ball at (571) 272-3212.

Kery A. Fries
Senior Legal Advisor
Office of Patent Legal Administration
Office of Deputy Commissioner
for Examination Policy

UNITED STATES PATENT AND TRADEMARK OFFICE

Commissioner for Patents
United States Patent and Trademark Office
P.O. Box 1450
Alexandria, VA 22313-1450
www.uspto.gov

MICHAEL P. MORRIS
BOEHRINGER INGELHEIM USA CORPORATION
900 RIDGEBURY ROAD
P O BOX 368
RIDGEFIELD CT 06877-0368

MAILED

JUN 29 2010

OFFICE OF PETITIONS

In re Patent No. 7,579,469
Issued: August 25, 2009
Application No. 10/739,208
Filed: December 18, 2003
Attorney Docket No: 09-0272

: DECISION ON REQUEST
: FOR RECONSIDERATION
: OF PATENT TERM ADJUSTMENT
: AND
: NOTICE OF INTENT TO ISSUE
: CERTIFICATE OF CORRECTION

This is a decision on the RECONSIDERATION OF APPLICATION FOR PATENT TERM ADJUSTMENT filed on October 16, 2009 and treated under 37 CFR 1.705(d), requesting that the patent term adjustment indicated on the above-identified patent be corrected from 611 days to 1026 days.

The petition to correct the patent term adjustment indicated on the above-identified patent to indicate that the term of the above-identified patent is extended or adjusted by nine hundred four (904) days is **GRANTED to the extent indicated herein**.

As the period from the filing date of the request for continued examination (RCE) to the issue date of the patent is not included in the "B" delay period, the over three year period begins on December 18, 2006 and ends on December 18, 2008, the day before the RCE was filed, and the B delay considering the 8 days of overlap is 731 days. See 35 U.S.C. 154(b)(1)(B)(i). Non-overlapping B delay is 723 days. Further, patentee fails to account for the filing of a Notice of Appeal on August 19, 2008. The 122 days of the over three year period consumed by appellate review, beginning on August 18, 2008 and ending on December 19, 2008, the date the RCE was filed, are not included in the B delay. *See* 35 U.S.C. § 154(b)(1)(B)(ii). As such, the patent term adjustment is 904 (416 + 8 + "A delay days" + 731"B delay days" - 8 days overlap - 122 days excluded - 121 applicant delay days, not 1026 days.

The Office will *sua sponte* issue a certificate of correction. Pursuant to 37 CFR 1.322, the Office will not issue a certificate of correction without first providing assignee or

patentee an opportunity to be heard. Accordingly, patentees are given **one (1) month or thirty (30) days**, whichever is longer, from the mail date of this decision to respond. No extensions of time will be granted under § 1.136.

The application is being forwarded to the Certificates of Branch for issuance of a certificate of correction. The Office will issue a certificate of correction indicating that the term of the above-identified patent is extended or adjusted by **nine hundred four (904)** days.

Telephone inquiries specific to this decision should be directed to Senior Petitions Attorney Patricia Faison-Ball at (571) 272-3212.

Anthony Knight
Director
Office of Petitions

Enclosure: Copy of DRAFT Certificate of Correction

DRAFT

UNITED STATES PATENT AND TRADEMARK OFFICE

CERTIFICATE OF CORRECTION

PATENT : 7,579,469 B2

DATED : August 25, 2009

INVENTOR(S) : Daniel Kuzmich

It is certified that error appears in the above-identified patent and that said Letters Patent is hereby corrected as shown below:

On the cover page,

[*] Notice: Subject to any disclaimer, the term of this patent is extended or adjusted under 35 USC 154(b) by (611) days

Delete the phrase "by 611 days" and insert – by 904 days--

UNITED STATES PATENT AND TRADEMARK OFFICE

COMMISSIONER FOR PATENTS
UNITED STATES PATENT AND TRADEMARK OFFICE
P.O. BOX 1450
ALEXANDRIA, VA 22313-1450
www.uspto.gov

MAILED

AUG 17 2004

DIRECTOR'S OFFICE
TECHNOLOGY CENTER 3600

Kilpatrick Stockton LLP
607 14th Street, N.W.
Washington, DC 20005

In re application of : **DECISION ON PETITION**
Robert E. Patricelli et al. : **TO MAKE SPECIAL**
Application No. 10/739,218 : **(ACCELERATED**
Filed: December 19, 2003 : **EXAMINATION)**
For: METHOD AND SYSTEM FOR PROCESSING :
TRANSACTIONS INVOLVING ACCOUNTS FOR REIMBUSING MEDICAL EXPENSES OR PATIENT RESPONSIBLE BALANCES WITH MULTIPLE TRANSACTION SUBSTANTIATION MODES

This is in response to the petition filed on June 15, 2004 to make the above-identified application special on the basis of special examining procedure for certain new applications - accelerated examination as set forth in MPEP § 708.02 VIII.

The requirements for granting special status under this section are: (A) a petition to make special accompanied by the fee set forth in 37 CFR 1.17(i); (B) all claims being directed to a single invention, or an election without traverse if the Office determines that all the claims are not directed to a single invention; (C) a statement that a pre-examination search was made listing the field of search; (D) one copy of each of the references deemed most closely related to the subject matter encompassed by the claims if said references are not already of record; and (E) a detailed discussion of how the claimed subject matter is patentable over the references in accordance with 37 CFR 1.111 (b) and (c).

Since all of the requirements for special status under MPEP § 708.02 VIII have been met, the petition is **GRANTED**.

The examiner is directed (1) to make an interference search for possible interfering applications, (2) to promptly examine this application out of turn, and (3) if any interfering application is discovered, to examine such application simultaneously and state in the first official letter of such application that it is being taken out of turn because of a possible interference.

Petitioner is advised that this application will continue to be special, throughout its entire prosecution and pendency, including interference or appeal, if any, only if petitioner makes a prompt ***bona fide*** effort, in response to each Office action, to place the application in condition for allowance, even if it is necessary to conduct an interview with the examiner to accomplish this purpose.

SUMMARY: Petition to Make Special **GRANTED**.

Kenneth J. Dorner
Special Programs Examiner
Technology Center 3600
(703) 308-0866

KJD/vdb: 8/9/04

UNITED STATES PATENT AND TRADEMARK OFFICE

COMMISSIONER FOR PATENTS
UNITED STATES PATENT AND TRADEMARK OFFICE
P.O. BOX 1450
ALEXANDRIA, VA 22313-1450
www.uspto.gov

STAAS & HALSEY LLP
SUITE 700
1201 NEW YORK AVENUE, N.W.
WASHINGTON, DC 20005

COPY MAILED

NOV 0 4 2004

OFFICE OF PETITIONS

In re Application of :
Jung, et al. :
Filed: December 19, 2003 : ON PETITION
Application No. 10/739,220 :
Atty. Dkt. No.: 11572.1177 :

This decision is in response to the "PETITION TO THE COMMISSIONER" filed September 10, 2004 in response to the Notice of Incomplete Nonprovisional Application ("Notice") mailed July 27, 2004 to accord the above-identified application a filing date of December 19, 2003.

The application was filed December 19, 2003. The Notice indicated that the application had not been accorded a filing date because the application was deposited without drawings as required under 35 USC 113, first sentence.

In response, the present petition was filed wherein petitioners argue that the application as deposited included 10 sheets of drawings. Petitioners have included as proof of mailing and proof of receipt of the 10 sheets of drawings a return postcard date stamped by the Office on December 19, 2003. A copy of the 10 sheets of drawings purportedly filed with the application on December 19, 2003 was also supplied.

The original drawings sheets submitted with the application papers have not been located. However, in view of the evidence presented, the petition to accord the application a filing date of December 19, 2003 is GRANTED.

Since the original drawing sheets cannot be located in the Office, the copies supplied with the instant petition will be used for examination purposes.

No petition fee is due in connection with this matter. A refund of $130.00 has been requested from the Finance Office, Refund Section. The refund will be credited to Deposit Account No. 19-3935.

This application will be returned to the Office of Initial Patent Examination for further processing with a filing date of December 19, 2003.

Telephone inquiries related to this decision may be directed to the undersigned at (571) 272-3205.

Alesia M. Brown
Senior Petitions Attorney
Office of Petitions

UNITED STATES PATENT AND TRADEMARK OFFICE

Commissioner for Patents
United States Patent and Trademark Office
P.O. Box 1450
Alexandria, VA 22313-1450
www.uspto.gov

William M. Hanlon Jr.
Young & Basile, PC
3001 West Big Beaver Road
Suite 624
Troy, MI 48084-3107

COPY MAILED

JUL 24 2006

OFFICE OF PETITIONS

In re Application of :
Michael Colton :

Application No. 10/739,235 : DECISION ON PETITION
Filed: December 18, 2003 : TO WITHDRAW
Attorney Docket No. CNM-100-C : FROM RECORD
:

This is a decision on the Request to Withdraw as attorney or agent of record under 37 C.F.R. § 1.36(b), filed October 27, 2005.

The request is **APPROVED**.

A grantable request to withdraw as attorney/agent of record must be signed by every attorney/agent seeking to withdraw or contain a clear indication that one attorney is signing on behalf of another/others. A request to withdraw will not be approved unless at least 30 (thirty) days would remain between the date of approval and the later of the expiration date of a time to file a response or the expiration date of the maximum time period which can be extended under 37 C.F.R. § 1.136(a).

The request was signed by Andrew R. Basile Sr., on behalf of all attorneys of record. All attorneys/agents have been withdrawn.

All future correspondence will be directed to the first named inventor Andrew R. Basile Sr. at the address indicated below.

Applicant is reminded that there is no attorney of record at this time.

There is an outstanding Office action mailed June 27, 2006 that requires a reply from the applicant.

Telephone inquiries concerning this decision should be directed to Terri Williams at 571-272-2991.

David Bucci
Petitions Examiner
Office of Petitions

cc: Michael Colton
10 Blackberry
Andover, MA 01810

UNITED STATES PATENT AND TRADEMARK OFFICE

Commissioner for Patents
United States Patent and Trademark Office
P.O. Box 1450
Alexandria, VA 22313-1450
www.uspto.gov

COPY MAILED

AUG 0 7 2006

OFFICE OF PETITIONS

JOHN T. WINBURN
100 BOSCH BOULEVARD
NEW BERN NC 28562

In re Application of :
Erich BOTT et al. : DECISION ON PETITIONS
Application No. 10/739,250 : UNDER 37 CFR 1.183 AND
Filed: December 18, 2003 : UNDER 37 CFR 1.78(a)(3)
Attorney Docket No. 2001P15109WOUS :

This is a decision on the petition under 37 CFR 1.183, filed March 20, 2006, requesting waiver of 37 CFR 1.78(a)(3) as that rule operates in conjunction with 37 CFR 1.17(t), and a decision on the petition under 37 CFR 1.78(a)(3), filed April 28, 2006, to accept an unintentionally delayed claim under 35 U.S.C. § 120 and 365(c) for the benefit of priority to prior-filed PCT Application No. PCT/EP02/06600, filed June 14, 2002, set forth in the accompanying Application Data Sheet.

The petition under 37 CFR 1.183 is **DISMISSED** as moot in view of the request filed April 28, 2006, withdrawing the petition to waive the surcharge fee requirement of 37 CFR 1.78(a)(3). No fee has been assessed to petitioner's deposit account for the petition under 37 CFR 1.183.

The petition under 37 CFR 1.78(a)(3) is **GRANTED.**

A petition for acceptance of a claim for late priority under 37 CFR 1.78(a)(3) is only applicable to those applications filed on or after November 29, 2000. Further, the petition is appropriate only after the expiration of the period specified in 37 CFR 1.78(a)(2)(ii). In addition, the petition under 37 CFR 1.78(a)(3) must be accompanied by:

(1) the reference required by 35 U.S.C. § 120 and 37 CFR 1.78(a)(2)(i) of the prior-filed application, unless previously submitted;
(2) the surcharge set forth in § 1.17(t); and
(3) a statement that the entire delay between the date the claim was due under 37 CFR 1.78(a)(2)(ii) and the date the claim was filed was unintentional. The Commissioner may require additional information where there is a question whether the delay was unintentional.

All the above requirements having been satisfied, the late claim for priority under 35 U.S.C. § 120 and 365(c) is accepted as being unintentionally delayed.

The granting of the petition to accept the delayed benefit claim to the prior-filed application under 37 CFR 1.78(a)(3) should not be construed as meaning that the application is entitled to the benefit of the prior-filed application. In order for the application to be entitled to the benefit of the prior-filed application, all other requirements under 35 U.S.C. §§ 120 and 365(c) and 37 CFR 1.78(a)(1) and (a)(2) must be met. Similarly, the fact that the corrected Filing Receipt accompanying this decision on petition includes the prior-filed application should not be construed as meaning that applicant is entitled to the claim for benefit of priority to the prior-filed application noted thereon. Accordingly, the examiner will, in due course, consider this benefit claim and determine whether the application is entitled to the benefit of the earlier filing date.

A corrected Filing Receipt, which includes the priority claim to the prior-filed application, accompanies this decision on petition.

Any inquiries concerning this decision may be directed to David Bucci at (571) 272-7099. All other inquiries concerning either the examination procedures or status of the application should be directed to the Technology Center.

This application is being forwarded to the examiner of Technology Center Art Unit 1744 for appropriate action on the amendment filed April 28, 2006, including consideration of applicant's entitlement to claim benefit of priority under 35 U.S.C. § 120 and 365(c) to the above-noted, prior-filed PCT application.

David Bucci
Petitions Examiner
Office of Petitions

ATTACHMENT: Corrected Filing Receipt

UNITED STATES PATENT AND TRADEMARK OFFICE

UNITED STATES DEPARTMENT OF COMMERCE
United States Patent and Trademark Office
Address: COMMISSIONER FOR PATENTS
P.O. Box 1450
Alexandria, Virginia 22313-1450
www.uspto.gov

APPL NO.	FILING OR 371 (c) DATE	ART UNIT	FIL FEE REC'D	ATTY.DOCKET NO	DRAWINGS	TOT CLMS	IND CLMS
10/739,250	12/18/2003	1744	900	2001P15109WOUS	2	11	1

CONFIRMATION NO. 8605

000046726
JOHN T. WINBURN
100 BOSCH BOULEVARD
NEW BERN, NC 28562

CORRECTED FILING RECEIPT

OC000000019909410

Date Mailed: 08/04/2006

Receipt is acknowledged of this regular Patent Application. It will be considered in its order and you will be notified as to the results of the examination. Be sure to provide the U.S. APPLICATION NUMBER, FILING DATE, NAME OF APPLICANT, and TITLE OF INVENTION when inquiring about this application. Fees transmitted by check or draft are subject to collection. Please verify the accuracy of the data presented on this receipt. **If an error is noted on this Filing Receipt, please mail to the Commissioner for Patents P.O. Box 1450 Alexandria Va 22313-1450. Please provide a copy of this Filing Receipt with the changes noted thereon. If you received a "Notice to File Missing Parts" for this application, please submit any corrections to this Filing Receipt with your reply to the Notice. When the USPTO processes the reply to the Notice, the USPTO will generate another Filing Receipt incorporating the requested corrections (if appropriate).**

Applicant(s)

Erich Bott, Hollstadt, GERMANY;
Wolfgang Kemmerzell, Gersfeld, GERMANY;

Assignment For Published Patent Application

BSH Bosch und Siemens Hausgerate GmbH, Munich, GERMANY

Power of Attorney: The patent practitioners associated with Customer Number **000046726**.

Domestic Priority data as claimed by applicant

This application is a CON of PCT/EP02/06600 06/14/2002

Foreign Applications

GERMANY 10131694.1 06/29/2001
If Required, Foreign Filing License Granted: 03/29/2004

The country code and number of your priority application, to be used for filing abroad under the Paris Convention, is US10/739,250

Projected Publication Date: Not Applicable

Non-Publication Request: No

Early Publication Request: No

Title

Cable-pull opening

Preliminary Class

015

PROTECTING YOUR INVENTION OUTSIDE THE UNITED STATES

Since the rights granted by a U.S. patent extend only throughout the territory of the United States and have no effect in a foreign country, an inventor who wishes patent protection in another country must apply for a patent in a specific country or in regional patent offices. Applicants may wish to consider the filing of an international application under the Patent Cooperation Treaty (PCT). An international (PCT) application generally has the same effect as a regular national patent application in each PCT-member country. The PCT process **simplifies** the filing of patent applications on the same invention in member countries, but **does not result** in a grant of "an international patent" and does not eliminate the need of applicants to file additional documents and fees in countries where patent protection is desired.

Almost every country has its own patent law, and a person desiring a patent in a particular country must make an application for patent in that country in accordance with its particular laws. Since the laws of many countries differ in various respects from the patent law of the United States, applicants are advised to seek guidance from specific foreign countries to ensure that patent rights are not lost prematurely.

Applicants also are advised that in the case of inventions made in the United States, the Director of the USPTO must issue a license before applicants can apply for a patent in a foreign country. The filing of a U.S. patent application serves as a request for a foreign filing license. The application's filing receipt contains further information and guidance as to the status of applicant's license for foreign filing.

Applicants may wish to consult the USPTO booklet, "General Information Concerning Patents" (specifically, the section entitled "Treaties and Foreign Patents") for more information on timeframes and deadlines for filing foreign patent applications. The guide is available either by contacting the USPTO Contact Center at 800-786-9199, or it can be viewed on the USPTO website at http://www.uspto.gov/web/offices/pac/doc/general/index.html.

For information on preventing theft of your intellectual property (patents, trademarks and copyrights), you may wish to consult the U.S. Government website, http://www.stopfakes.gov. Part of a Department of Commerce initiative, this website includes self-help "toolkits" giving innovators guidance on how to protect intellectual property in specific countries such as China, Korea and Mexico. For questions regarding patent enforcement issues, applicants may call the U.S. Government hotline at 1-866-999-HALT (1-866-999-4158).

LICENSE FOR FOREIGN FILING UNDER
Title 35, United States Code, Section 184
Title 37, Code of Federal Regulations, 5.11 & 5.15

GRANTED

The applicant has been granted a license under 35 U.S.C. 184, if the phrase "IF REQUIRED, FOREIGN FILING LICENSE GRANTED" followed by a date appears on this form. Such licenses are issued in all applications where the conditions for issuance of a license have been met, regardless of whether or not a license may be required as set forth in 37 CFR 5.15. The scope and limitations of this license are set forth in 37 CFR 5.15(a) unless an earlier license has been issued under 37 CFR 5.15(b). The license is subject to revocation upon written notification. The date indicated is the effective date of the license, unless an earlier license of similar scope has been granted under 37 CFR 5.13 or 5.14.

This license is to be retained by the licensee and may be used at any time on or after the effective date thereof unless it is revoked. This license is automatically transferred to any related applications(s) filed under 37 CFR 1.53(d). This license is not retroactive.

The grant of a license does not in any way lessen the responsibility of a licensee for the security of the subject matter as imposed by any Government contract or the provisions of existing laws relating to espionage and the national security or the export of technical data. Licensees should apprise themselves of current regulations especially with respect to certain countries, of other agencies, particularly the Office of Defense Trade Controls, Department of State (with respect to Arms, Munitions and Implements of War (22 CFR 121-128)); the Bureau of Industry and Security, Department of Commerce (15 CFR parts 730-774); the Office of Foreign Assets Control, Department of Treasury (31 CFR Parts 500+) and the Department of Energy.

NOT GRANTED

No license under 35 U.S.C. 184 has been granted at this time, if the phrase "IF REQUIRED, FOREIGN FILING LICENSE GRANTED" DOES NOT appear on this form. Applicant may still petition for a license under 37 CFR 5.12, if a license is desired before the expiration of 6 months from the filing date of the application. If 6 months has lapsed from the filing date of this application and the licensee has not received any indication of a secrecy order under 35 U.S.C. 181, the licensee may foreign file the application pursuant to 37 CFR 5.15(b).

UNITED STATES PATENT AND TRADEMARK OFFICE

Commissioner for Patents
United States Patent and Trademark Office
P.O. Box 1450
Alexandria, VA 22313-1450
www.uspto.gov

JOHN T. WINBURN
100 BOSCH BOULEVARD
NEW BERN NC 28562

COPY MAILED

JUN 21 2006

OFFICE OF PETITIONS

In re Application of	:	
Michael ROSENBAUER et al.	:	DECISION ON PETITIONS
Application No. 10/739,251	:	UNDER 37 CFR 1.183 AND
Filed: December 18, 2003	:	UNDER 37 CFR 1.78(a)(3)
Attorney Docket No. 2001P13002WOUS	:	

This is a decision on the petition under 37 CFR 1.183, filed March 20, 2006, requesting waiver of 37 CFR 1.78(a)(3) as that rule operates in conjunction with 37 CFR 1.17(t), and a decision on the petition under 37 CFR 1.78(a)(3), filed April 28, 2006, to accept an unintentionally delayed claim under 35 U.S.C. § 120 and 365(c) for the benefit of priority to prior-filed PCT Application No. PCT/EP02/06460, filed June 12, 2002, set forth in the accompanying Application Data Sheet.

The petition under 37 CFR 1.183 is **DISMISSED** as moot in view of the request filed April 28, 2006, withdrawing the petition to waive the surcharge fee requirement of 37 CFR 1.78(a)(3). No fee has been assessed to petitioner's deposit account for the petition under 37 CFR 1.183.

The petition under 37 CFR 1.78(a)(3) is **GRANTED.**

A petition for acceptance of a claim for late priority under 37 CFR 1.78(a)(3) is only applicable to those applications filed on or after November 29, 2000. Further, the petition is appropriate only after the expiration of the period specified in 37 CFR 1.78(a)(2)(ii). In addition, the petition under 37 CFR 1.78(a)(3) must be accompanied by:

(1) the reference required by 35 U.S.C. § 120 and 37 CFR 1.78(a)(2)(i) of the prior-filed application, unless previously submitted;
(2) the surcharge set forth in § 1.17(t); and
(3) a statement that the entire delay between the date the claim was due under 37 CFR 1.78(a)(2)(ii) and the date the claim was filed was unintentional. The Commissioner may require additional information where there is a question whether the delay was unintentional.

All the above requirements having been satisfied, the late claim for priority under 35 U.S.C. § 120 and 365(c) is accepted as being unintentionally delayed.

The granting of the petition to accept the delayed benefit claim to the prior-filed application under 37 CFR 1.78(a)(3) should not be construed as meaning that the application is entitled to the benefit of the prior-filed application. In order for the application to be entitled to the benefit of the prior-filed application, all other requirements under 35 U.S.C. §§ 120 and 365(c) and 37 CFR 1.78(a)(1) and (a)(2) must be met. Similarly, the fact that the corrected Filing Receipt accompanying this decision on petition includes the prior-filed application should not be construed as meaning that applicant is entitled to the claim for benefit of priority to the prior-filed application noted thereon. Accordingly, the examiner will, in due course, consider this benefit claim and determine whether the application is entitled to the benefit of the earlier filing date.

A corrected Filing Receipt, which includes the priority claim to the prior-filed application, accompanies this decision on petition.

Any inquiries concerning this decision may be directed to David Bucci at (571) 272-7099. All other inquiries concerning either the examination procedures or status of the application should be directed to the Technology Center.

This application is being forwarded to the examiner of Technology Center Art Unit 2836 for appropriate action on the amendment filed April 28, 2006, including consideration of applicant's entitlement to claim benefit of priority under 35 U.S.C. § 120 and 365(c) to the above-noted, prior-filed PCT application.

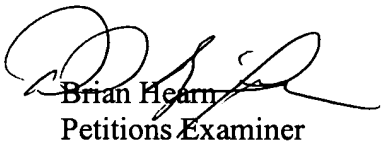

Brian Hearn
Petitions Examiner
Office of Petitions

ATTACHMENT: Corrected Filing Receipt

UNITED STATES PATENT AND TRADEMARK OFFICE

Commissioner for Patents
United States Patent and Trademark Office
P.O. Box 1450
Alexandria, VA 22313-1450
www.uspto.gov

FINNEGAN, HENDERSON, FARABOW, GARRETT & DUNNER
LLP
901 NEW YORK AVENUE, NW
WASHINGTON, DC 20001-4413

MAR 13 2007

In re Application of:
FUJISAWA ET AL.
Serial No.: 10/739,275
Filed: December 19, 2003
For: WAFER FLATNESS EVALUATION METHOD, WAFER FLATNESS EVALUATION APPARATUS CARRYING OUT THE EVALUATION METHOD, WAFER MANUFACTURING METHOD USING THE EVALUATION METHOD, WAFER QUALITY ASSURANCE METHOD USING THE EVALUATION METHOD, SEMICONDUCTOR DEVICE MANUFACTURING METHOD USING THE EVALUATION METHOD AND SEMICONDUCTOR DEVICE MANUFACTURING METHOD USING A WAFER EVALUATED BY THE EVALUATION METHOD

DECISION GRANTING PETITION
37 CFR 1.84(a)(2)

This is a decision is in response to the petition filed February 26, 2007 in the above-identified application. Petition request that color drawings be accepted in accordance with 37 C.F.R. 1.84 (a)(2).

The petition state that Figures 13A, 13B, 14A, 14B, 16A-C, and 17A-C are color drawings necessary to distinguish the results of wafer front/back surface local flatness (SFQR) measurements with the wafer back/front surface chucked; front/rear surface measurements with rear/front surface chucked; and results extracted from actual measurements. The petition complies with 37 C.F.R. 1.84 (a)(2) in that it was accompanied by (1) the appropriate fee and (2) at least three sets of color drawings. The petition was further accompanied by an amendment with places the specification in compliance with the requirement set forth in 37 C.F.R. 1.84 (a)(2) (iii).

The papers filed on February 26, 2007 fulfill the requirements set forth in 37 C.F.R. 1.84 (a)(2) and the petition is granted.

SUMMARY: The petition is **granted**. The application has been forwarded to issue branch for processing into a patent.

Diane I. Lee
Supervisory Patent Examiner
Art Unit 2851

UNITED STATES PATENT AND TRADEMARK OFFICE

Commissioner for Patents
United States Patent and Trademark Office
P.O. Box 1450
Alexandria, VA 22313-1450
www.uspto.gov

BLANK ROME LLP
600 NEW HAMPSHIRE AVENUE, N.W.
WASHINGTON, DC 20037

COPY MAILED

JUL 11 2007

OFFICE OF PETITIONS

In re Application of
Kenneth Matson, et. al.
Application No. 10/739,288
Filed: December 19, 2003
Attorney Docket No. 111933-00112

DECISION ON PETITION

This is a decision on the petition under 37 CFR 1.182, filed October 3, 2006, to correct the spelling of the inventor's names.

The petition is **GRANTED**.

The spelling of the names will be changed as follows:

1. "Ken Matson" to --Kenneth Matson--
2. "Matt Dymek" to --Matthew Dymek--
3. "Tom Hjellming" to --Thomas Hjellming--
4. "Bob Moyer" to --Robert Moyer--
5. "Steve Stevens" to --Steven Stevens--

Office records have been corrected to reflect the correct spelling of the above-named inventors. A corrected Filing Receipt, which sets forth the correct spelling of names, accompanies this decision.

The issue fee in this case was paid on April 25, 2007. Therefore, the printing of the patent may have progressed to the point where the correct spelling of the names could not be included on the front page of the Letters Patent. In such event, petitioner may request a Certificate of Correction pursuant to the provisions of 37 CFR 1.323 and pay the required fee of $100.

The matter is being referred to the Office of Publications for further processing.

Any questions concerning this matter may be directed to the undersigned at (571) 272-3226.

Andrea Smith
Petitions Examiner
Office of Petitions

ATTACHMENT: Corrected Filing Receipt

UNITED STATES PATENT AND TRADEMARK OFFICE

UNITED STATES DEPARTMENT OF COMMERCE
United States Patent and Trademark Office
Address: COMMISSIONER FOR PATENTS
P.O. Box 1450
Alexandria, Virginia 22313-1450
www.uspto.gov

APPL NO.	FILING OR 371(c) DATE	ART UNIT	FIL FEE REC'D	ATTY.DOCKET NO	TOT CLMS	IND CLMS
10/739,288	12/19/2003	2165	750	111933-00112	5	1

CONFIRMATION NO. 8831

27557
BLANK ROME LLP
600 NEW HAMPSHIRE AVENUE, N.W.
WASHINGTON, DC 20037

CORRECTED FILING RECEIPT

OC000000024741803

Date Mailed: 07/10/2007

Receipt is acknowledged of this nonprovisional patent application. The application will be taken up for examination in due course. Applicant will be notified as to the results of the examination. Any correspondence concerning the application must include the following identification information: the U.S. APPLICATION NUMBER, FILING DATE, NAME OF APPLICANT, and TITLE OF INVENTION. Fees transmitted by check or draft are subject to collection. Please verify the accuracy of the data presented on this receipt. **If an error is noted on this Filing Receipt, please write to the Office of Initial Patent Examination's Filing Receipt Corrections. Please provide a copy of this Filing Receipt with the changes noted thereon. If you received a "Notice to File Missing Parts" for this application, please submit any corrections to this Filing Receipt with your reply to the Notice. When the USPTO processes the reply to the Notice, the USPTO will generate another Filing Receipt incorporating the requested corrections (if appropriate).**

Applicant(s)

Kenneth Matson, Bellevue, WA;
Brian Clapper, Royersford, PA;
Matthew Dymek, Fleming Island, FL;
Thomas Hjellming, Wheaton, IL;
Robert Moyer, St. Davids, PA;
Steven Stevens, Chalfont, PA;

Power of Attorney:

Donald Greene–22470
Herbert Cohen–25109
Victor Wigman–25201
George Myers Jr–27040
Michael Greenbaum–28419
Charles Wolfe Jr–28680
Michael White–32795
Nicholas Bromer–33478
David Edmondson–35126
Karl Neidert–39313

Domestic Priority data as claimed by applicant

This application is a CON of 09/741,766 12/21/2000 PAT 6,668,254

Foreign Applications

If Required, Foreign Filing License Granted: 03/29/2004

The country code and number of your priority application, to be used for filing abroad under the Paris Convention, is US10/739,288

Projected Publication Date: Not Applicable

Non-Publication Request: No

Early Publication Request: No

**** SMALL ENTITY ****

Title

METHOD AND SYSTEM FOR IMPORTING DATA

Preliminary Class

707

PROTECTING YOUR INVENTION OUTSIDE THE UNITED STATES

Since the rights granted by a U.S. patent extend only throughout the territory of the United States and have no effect in a foreign country, an inventor who wishes patent protection in another country must apply for a patent in a specific country or in regional patent offices. Applicants may wish to consider the filing of an international application under the Patent Cooperation Treaty (PCT). An international (PCT) application generally has the same effect as a regular national patent application in each PCT-member country. The PCT process **simplifies** the filing of patent applications on the same invention in member countries, but **does not result** in a grant of "an international patent" and does not eliminate the need of applicants to file additional documents and fees in countries where patent protection is desired.

Almost every country has its own patent law, and a person desiring a patent in a particular country must make an application for patent in that country in accordance with its particular laws. Since the laws of many countries differ in various respects from the patent law of the United States, applicants are advised to seek guidance from specific foreign countries to ensure that patent rights are not lost prematurely.

Applicants also are advised that in the case of inventions made in the United States, the Director of the USPTO must issue a license before applicants can apply for a patent in a foreign country. The filing of a U.S. patent application serves as a request for a foreign filing license. The application's filing receipt contains further information and guidance as to the status of applicant's license for foreign filing.

Applicants may wish to consult the USPTO booklet, "General Information Concerning Patents" (specifically, the section entitled "Treaties and Foreign Patents") for more information on timeframes and deadlines for filing foreign patent applications. The guide is available either by contacting the USPTO Contact Center at 800-786-9199, or it can be viewed on the USPTO website at http://www.uspto.gov/web/offices/pac/doc/general/index.html.

For information on preventing theft of your intellectual property (patents, trademarks and copyrights), you may wish to consult the U.S. Government website, http://www.stopfakes.gov. Part of a Department of Commerce initiative, this website includes self-help "toolkits" giving innovators guidance on how to protect intellectual property in specific countries such as China, Korea and Mexico. For questions regarding patent enforcement issues, applicants may call the U.S. Government hotline at 1-866-999-HALT (1-866-999-4158).

LICENSE FOR FOREIGN FILING UNDER
Title 35, United States Code, Section 184
Title 37, Code of Federal Regulations, 5.11 & 5.15

GRANTED

The applicant has been granted a license under 35 U.S.C. 184, if the phrase "IF REQUIRED, FOREIGN FILING LICENSE GRANTED" followed by a date appears on this form. Such licenses are issued in all applications where the conditions for issuance of a license have been met, regardless of whether or not a license may be required as set forth in 37 CFR 5.15. The scope and limitations of this license are set forth in 37 CFR 5.15(a) unless an earlier license has been issued under 37 CFR 5.15(b). The license is subject to revocation upon written notification. The date indicated is the effective date of the license, unless an earlier license of similar scope has been granted under 37 CFR 5.13 or 5.14.

This license is to be retained by the licensee and may be used at any time on or after the effective date thereof unless it is revoked. This license is automatically transferred to any related applications(s) filed under 37 CFR 1.53(d). This license is not retroactive.

The grant of a license does not in any way lessen the responsibility of a licensee for the security of the subject matter as imposed by any Government contract or the provisions of existing laws relating to espionage and the national security or the export of technical data. Licensees should apprise themselves of current regulations especially with respect to certain countries, of other agencies, particularly the Office of Defense Trade Controls, Department of State (with respect to Arms, Munitions and Implements of War (22 CFR 121-128)); the Bureau of Industry and Security, Department of Commerce (15 CFR parts 730-774); the Office of Foreign Assets Control, Department of Treasury (31 CFR Parts 500+) and the Department of Energy.

NOT GRANTED

No license under 35 U.S.C. 184 has been granted at this time, if the phrase "IF REQUIRED, FOREIGN FILING LICENSE GRANTED" DOES NOT appear on this form. Applicant may still petition for a license under 37 CFR 5.12, if a license is desired before the expiration of 6 months from the filing date of the application. If 6 months has lapsed from the filing date of this application and the licensee has not received any indication of a secrecy order under 35 U.S.C. 181, the licensee may foreign file the application pursuant to 37 CFR 5.15(b).

UNITED STATES PATENT AND TRADEMARK OFFICE

UNITED STATES DEPARTMENT OF COMMERCE
United States Patent and Trademark Office
Address: COMMISSIONER FOR PATENTS
P.O. Box 1450
Alexandria, Virginia 22313-1450
www.uspto.gov

MANELLI DENISON & SELTER PLLC
7th Floor
2000 M Street, N.W.
Washington, DC 20036-3307

Mail Date: 04/21/2010

Applicant	: Steve S. Anspach	: DECISION ON REQUEST FOR
Patent Number	: 7626977	: RECALCULATION of PATENT
Issue Date	: 12/01/2009	: TERM ADJUSTMENT IN VIEW
Appliction No	: 10/739,289	: OF WYETH AND NOTICE OF INTENT TO
Filed	: 12/19/2003	: ISSUE CERTIFICATE OF CORRECTION
		:

The Request for Recalculation is **GRANTED** to the extent indicated.

The patent term adjustment has been determined to be **191** days. The USPTO will *sua sponte* issue a certificate of correction reflecting the amount of PTA days determined by the recalculation.

Prior to the issuance of the certificate of correction, the USPTO will afford patentee an opportunity to be heard and request reconsideration. Accordingly, patentee has **one month or thirty (30) days**, whichever is longer, to file a request for reconsideration of this patent term adjustment calculation. See 35 U.S.C. 154(b)(3)(B)(ii) and 37 CFR 1.322(a)(4). No extensions of time will be granted under 37 CFR 1.136.

Patentee should use document code PET.OP if electronically filing a request for reconsideration of this patent term adjustment calculation. The patentee must also include the information required by 37 CFR 1.705(b)(2) and the fee required by 37 CFR 1.18(e). If patentee does not file a timely request for reconsideration of this patent term adjustment calculation including the information required by 37 CFR 1.705(b)(2) and the fee required by 37 CFR 1.18(e), the USPTO will issue a certificate of correction reflecting the PTA determination noted above.

Patentee should be aware that in order to preserve the right to review in the United States District Court for the District of Columbia of the USPTO patent term adjustment determination, patentee must ensure that he or she also take the steps required under 35 U.S.C. 154(b)(4)(A) in a timely manner. Nothing in the request for recalculation should be construed as providing an alternative time frame for commencing a civil action under 35 U.S.C. 154(b)(4)(A).

Any questions concerning this decision should be directed to the Office of Patent Legal Administration at 571-272-7702.

SPE RESPONSE FOR CERTIFICATE OF CORRECTION

Paper No.: _____

DATE : 10/30/08

TO SPE OF : ART UNIT 2854

SUBJECT : Request for Certificate of Correction for Appl. No.: 10739794 Patent No.: 7428869

Please respond to this request for a certificate of correction within 7 days.

FOR IFW FILES:

Please review the requested changes/corrections as shown in the **COCIN** document(s) in the IFW application image. No new matter should be introduced, nor should the scope or meaning of the claims be changed.

Please complete the response (see below) and forward the completed response to scanning using document code **COCX**.

FOR PAPER FILES:

Please review the requested changes/corrections as shown in the attached certificate of correction. Please complete this form (see below) and forward it with the file to:

Certificates of Correction Branch (CofC)
South Tower - 9A22
Palm Location 7580

/Meri Joelson/
Certificates of Correction Branch
703-308-9390 ext. 114

Thank You For Your Assistance

The request for issuing the above-identified correction(s) is hereby:
Note your decision on the appropriate box.

- ☐ **Approved** — All changes apply.
- ☐ **Approved in Part** — Specify below which changes **do not** apply.
- ☒ **Denied** — State the reasons for denial below.

Comments: The title was changed at the time of allowance in accordance with the requirements of MPEP 606.01 that that the title of the invention should be clearly indicative of the invention to which the claims are directed. Applicant's requested title does not refer to the allowable subject matter and therefore is not considered to be appropriate.

/judy nguyen/
JUDY NGUYEN
SUPERVISORY PATENT EXAMINER

SPE

2854
Art Unit

UNITED STATES DEPARTMENT OF COMMERCE
Patent and Trademark Office
ASSISTANT SECRETARY OF COMMERCE AND
COMMISSIONER OF PATENTS AND TRADEMARKS
Washington, D.C. 20231

Date: March 13, 2009

Patent No : 7,428,869 B2
Application No: 10/739,294
Issued : September 30, 2008
Inventor : Lutz
Title : **METHOD OF PRINTING GOLF BALLS WITH CONTROLLED INK VISCOSITY**

Re: Request for Certificate of Correction

Consideration has been given your request for the issuance of a certificate of correction, for the above-identified patent under the provision of Rule 1.322 or R.1323.

Respecting the alleged error, the title was changed at the time of allowance in accordance with the requirements of MPEP 606.01 that the title of the invention should be clearly indicative of the invention to which the claims are directed. Applicant's requested title does not refer to the allowable subject matter and therefore is not considered to be appropriate. Therefore, no correction(s) is in order here under United States Codes (U.S.C.) 254 or 255 the Code of Federal Regulation (C.F.R.) R1.322 or R1.323.

In view of the foregoing, your request is hereby denied.

Further correspondence concerning this matter should be filed and directed to Decisions and Certificates of Correction Branch. Any response must be filed within a four week period.

Valerie Jackson
Mary F. Diggs
Decisions & Certificates
of Correction Branch
(703) 308-9390 ext. # 114

Stephanie D. Scruggs, Registration No. 54,432
Hanify & King, P.C.
1875 K Street, N.W., Suite 707
Washington, D.C. 20006

vj/MFD

UNITED STATES PATENT AND TRADEMARK OFFICE

Commissioner for Patents
United States Patent and Trademark Office
P.O. Box 1450
Alexandria, VA 22313-1450
www.uspto.gov

HUNTON & WILLIAMS
INTELLECTUAL PROPERTY DEPARTMENT
1900 K STREET, N.W., SUITE 1200
WASHINGTON, DC 20006-1109

COPY MAILED

MAR 27 2006

OFFICE OF PETITIONS

In re Application of :
Leif Borje Johannesson et al :
Application No. 10/739,310 : ON PETITION
Filed: December 19, 2003 :
Attorney Docket No. 60589.000015 :

This is a decision on the petition under 37 CFR 1.313(c), filed March 24, 2006, which is being treated under 37 CFR 1.313(c)(2), to withdraw the above-identified application from issue after payment of the issue fee.

The petition is **GRANTED**.

The above-identified application is withdrawn from issue for consideration of a submission under 37 CFR 1.114 (request for continued examination). See 37 CFR 1.313(c)(2).

Petitioner is advised that the issue fee paid on January 5, 2006 in the above-identified application cannot be refunded. If, however, the above-identified application is again allowed, petitioner may request that it be applied towards the issue fee required by the new Notice of Allowance.[1]

Telephone inquiries should be directed to Wan Laymon at (571) 272-3220.

This matter is being referred to Technology Center AU 3644 for processing of the request for continued examination under 37 CFR 1.114 and for consideration of the concurrently filed IDS.

Wan Laymon
Petitions Examiner
Office of Petitions

---

[1] The request to apply the issue fee to the new Notice may be satisfied by completing and returning the new Issue Fee Transmittal Form PTOL-85(b), which includes the following language thereon: "Commissioner for Patents is requested to apply the Issue Fee and Publication Fee (if any) or re-apply any previously paid issue fee to the application identified above." Petitioner is advised that, whether a fee is indicated as being due or not, the Issue Fee Transmittal Form **must** be completed and timely submitted to avoid abandonment. Note the language in bold text on the first page of the Notice of Allowance and Fee(s) Due (PTOL-85).

UNITED STATES PATENT AND TRADEMARK OFFICE

COMMISSIONER FOR PATENTS
UNITED STATES PATENT AND TRADEMARK OFFICE
P.O. BOX 1450
ALEXANDRIA, VA 22313-1450

www.uspto.gov

Date : March 27, 2006

TO : Director, Office of Patent Publication

FROM : Office of the Deputy Commissioner
for Patent Examination Policy

COPY MAILED
MAR 27 2006
OFFICE OF PETITIONS

SUBJECT : Withdrawal from Issue of

Applicant(s) : Leif Borje Johannesson et al
Application No. : 10/739,310
Filed : December 19, 2003

The above-identified application has been assigned Patent No. 7,025,017 and an issue date of April 11, 2006.

It is hereby directed that this application be withdrawn from issue at the request of the applicants. Do not refund the issue fee.

The following erratum should be published in the Official Gazette if the above-identified application is published in the OG of April 11, 2006:

"All reference to Patent No. 7,025,017 to Leif Borje Johannesson et al of Tullinge, SWEDEN for MILK CONVEYER DEVICE appearing in the Official Gazette of April 11, 2006 should be deleted since no patent was granted."

Wan Laymon
Petitions Examiner
Office of Petitions

cc: Paul Harrison
Deneise Boyd
Mary Louise McAskill
Niomi Farmer
Mary E. Johnson (Cookie)
Duane Davis (CDS)
Tamara K. Greene

UNITED STATES PATENT AND TRADEMARK OFFICE

Commissioner for Patents
United States Patent and Trademark Office
P.O. Box 1450
Alexandria, VA 22313-1450
www.uspto.gov

MAILED
FROM DIRECTORS OFFICE

MAY 16 2007

TECHNOLOGY CENTER 3600

Clyde I. Coughenour
16607 Sutton Place
Woodbridge, VA 22191

Paper No. 35

In re Application of
Frank L. Bruno et al
Application No. 10/739,336
Filed: December 19, 2003
Attorney Docket No.:
For: AN ELASTIC COUPLING FOR UNIVERSAL VACUUM EXTENSION

DECISION ON PETITION
TO INVOKE SUPERVISORY
AUTHORITY
UNDER 37 CFR 1.181

This is in response to applicant's petition filed April 17, 2006, which is supplemental to the petition filed on November 9, 2005 requesting that the non-final rejection of October 11, 2005 be withdrawn and the appeal brief of July 11, 2005 be considered. Both petitions will be considered as one herein.

The petition is **GRANTED** to the extent described below.

A review of the record reveals the following:

1. Original claims 1, 5 and 12 improperly contained two periods[1].
2. The first Office action, mailed October 13, 2004, improperly handled the improper form of the claims by informing applicant in a claim objection that the lines following the first period had to be deleted.
3. Applicant's response filed November 30, 2004 took issue with this requirement without any apparent recognition that there were two periods in each of the claims and that the actual issue should have been merely a minor informality regarding the form of the claim. No correction of claims 1, 5 and 12 to remove the extra period was made.
4. The final rejection mailed January 21, 2005 repeated the same claim objection and further indicated that any language appearing after the (first) period was ignored.
5. An amendment after final was filed on January 26, 2005 seeking to change the respective first periods to a semi-colon.
6. A notice of appeal and appeal brief were filed by applicant on February 3, 2005.
7. An advisory action was mailed on February 3, 2005 denying the entry of the after final amendment as allegedly raising new issues.

[1] Note that each claim must begin with a capital letter and end with a period and that periods may not be used elsewhere in the claims except for abbreviations. See MPEP 608.01(m) and *Fressola v. Manbeck*, 36 USPQ2d 1211 (D.D.C. 1995).

8. A first petition was filed on February 9, 2005 requesting supervisory review of the examiner's refusal to permit correction of the improper inclusion of two periods by having the first period changed to a semi-colon.
9. The petition was referred to the examiner by the Group Director to treat as a request for reconsideration since the examiner agreed that it was improper to not consider the language of the claims appearing after the respective first period.
10. A new, non-final Office action was mailed on May 19, 2005 that, for the first time, considered each and every limitation of claims 1, 5 and 12. This Office action failed to include the necessary indication of supervisory approval for the reopening of prosecution after an appeal has been filed.
11. A second appeal brief was filed on July 11, 2005 that also requested reinstatement of the appeal.
12. Another non-final Office action was mailed on October 11, 2005 that also failed to include the necessary indication of supervisory approval for the reopening of prosecution after an appeal has been filed.
13. A second petition was filed on November 9, 2005 (addressed herein).
14. A third appeal brief was filed on January 10, 2006 that also requested reinstatement of the appeal.
15. Another non-final Office action was mailed March 22, 2006 setting forth yet another new ground of rejection.
16. A third petition was filed on April 17, 2006.
17. An appeal brief was filed on July 7, 2006.
18. An examiner's answer was mailed on August 14, 2006.
19. A reply brief was filed on September 1, 2006.
20. The examiner noted the reply brief on September 27, 2006.
21. The application was remanded back to the examiner on October 30, 2006.

Specifically, with respect to numerous remarks made in the petition of April 17, 2006, it should be noted that there is a clear line of demarcation between petitionable matters and appealable matters and this line must be carefully observed. Accordingly, the merits of any rejection (appealable matter) will not be addressed herein.

With respect to applicant's remarks regarding compact prosecution, it should be noted that the principle of compact prosecution comprises conducting an initial search which is as complete as possible, making art of record which meets both the concept and the wording of the claims as well as other art which is pertinent to significant, though unclaimed, features of the disclosed invention, and issuing a first Office action which clearly explains the examiner's position on each essential issue in such detail that, absent some unexpected consideration, the next Office action may be made final. The failure to follow the principle of compact prosecution does not create file wrapper estoppel that would foreclose an examiner from applying an appropriate rejection against the claims at a later date nor otherwise serve as an indicator of the patentability of the claimed subject matter. Rather, the failure to follow the principle of compact prosecution would only pertain to the propriety of making the next Office action final.

With respect to applicant's remarks concerning the submission of evidence that accompanies the appeal brief, it should be noted that 37 CFR 41.33(d) clearly sets forth that any new evidence

filed after the date of filing of the appeal will not be admitted except under specific conditions as outlined therein. Accordingly, unless the evidence was previously entered into the file before appeal, it cannot be introduced into the file as a part of the appeal brief. The submission of a dictionary page would constitute an exhibit/evidence that would be subject to this rule while attorney arguments merely stating what the definition is would not.

With respect to the examiner's objection to the drawings under 37 CFR 1.83(a) for allegedly not showing hook and loop fasteners, review of applicant's drawings reveals that Figs. 4 and 5 sufficiently illustrate and label the "hook-loop" strips so as to comply with the requirement of 37 CFR 1.83(a). Further, as noted by applicant, there is no standard, accepted form of illustration for "hook-loop" strips. The illustration provided by applicant's Figs. 4 and 5 is deemed to be acceptable and therefore the drawing objection is not appropriate and is hereby withdrawn.

With respect to applicant's remarks concerning the Office actions of May 9, 2005 and October 11, 2005, applicant is correct that these Office actions failed to include any evidence of supervisory approval. As set forth by MPEP 1207.04, the reopening of prosecution requires approval by the supervisory patent examiner. In view of the lack of a signature from the supervisory patent examiner, these Office actions were improper.

Given the prosecution that has occurred since the Office action of May 9, 2005 and the fact that the application has actually proceeded to the Board, it would not be fair to applicant to take prosecution back to the date of applicant's appeal brief filed on July 11, 2005 as requested in the petition filed November 9, 2005. However, to ensure that applicant receives due consideration in light of the concerns expressed in these petitions, the examiner's answer of August 14, 2006 is hereby vacated. The application is being forwarded to the examiner to hold a second appeal conference on the claims of this application in light of applicant's appeal brief filed on July 7, 2006 to determine the propriety of the rejections now of record. Any new action that would include a new ground of rejection will have been made with the implicit approval of the Group Director and will be evidenced by the Group Director's signature on that action. Thus, the inclusion of the Group Director's signature on the resultant action will serve to meet the requirements of 37 CFR 41.39(a) (2) and MPEP 1207.03.

Donald T. Hajec, Director
Technology Center 3600
(571) 272-5150
Facsimile No.: (571) 273-8300

KJD/DS: 4/27/07

United States
Patent And
Trademark Office

P.O. Box 1450, Alexandria, Virginia 22313-1450 – www.uspto.gov

PETITION DECISION

06/18/04

Christian Austin-Hollands
PO Box 170325
San Francisco, CA 94117

Dear Applicant:

The Box PG Pub replacement drawings for application number 10/739349 received on 05/11/04 by the U. S. Patent and Trademark Office will be included for patent publication.

Telephone inquiries should be directed to Kaletus King, Office of Pre-Grant Publication 703 605-4283.

Kaletus King

Signature of Reviewer, Office of Pre-Grant Publication

UNITED STATES PATENT AND TRADEMARK OFFICE

Commissioner for Patents
United States Patent and Trademark Office
P.O. Box 1450
Alexandria, VA 22313-1450
www.uspto.gov

JOHN T. WINBURN
100 BOSCH BOULEVARD
NEW BERN NC 28562

COPY MAILED

JUL 12 2006

OFFICE OF PETITIONS

In re Application of	:	
Silvio HAMM et al.	:	DECISION ON PETITIONS
Application No. 10/739,359	:	UNDER 37 CFR 1.183 AND
Filed: December 18, 2003	:	UNDER 37 CFR 1.78(a)(3)
Attorney Docket No. 2001P15108WOUS	:	

This is a decision on the petition under 37 CFR 1.183, filed March 20, 2006, requesting waiver of 37 CFR 1.78(a)(3) as that rule operates in conjunction with 37 CFR 1.17(t), and a decision on the petition under 37 CFR 1.78(a)(3), filed April 28, 2006, to accept an unintentionally delayed claim under 35 U.S.C. § 120 and 365(c) for the benefit of priority to prior-filed PCT Application No. PCT/EP02/06593, filed June 14, 2002, set forth in the accompanying Application Data Sheet.

The petition under 37 CFR 1.183 is **DISMISSED** as moot in view of the request filed April 28, 2006, withdrawing the petition to waive the surcharge fee requirement of 37 CFR 1.78(a)(3). No fee has been assessed to petitioner's deposit account for the petition under 37 CFR 1.183.

The petition under 37 CFR 1.78(a)(3) is **GRANTED.**

A petition for acceptance of a claim for late priority under 37 CFR 1.78(a)(3) is only applicable to those applications filed on or after November 29, 2000. Further, the petition is appropriate only after the expiration of the period specified in 37 CFR 1.78(a)(2)(ii). In addition, the petition under 37 CFR 1.78(a)(3) must be accompanied by:

(1) the reference required by 35 U.S.C. § 120 and 37 CFR 1.78(a)(2)(i) of the prior-filed application, unless previously submitted;

(2) the surcharge set forth in § 1.17(t); and

(3) a statement that the entire delay between the date the claim was due under 37 CFR 1.78(a)(2)(ii) and the date the claim was filed was unintentional. The Commissioner may require additional information where there is a question whether the delay was unintentional.

All the above requirements having been satisfied, the late claim for priority under 35 U.S.C. § 120 and 365(c) is accepted as being unintentionally delayed.

The granting of the petition to accept the delayed benefit claim to the prior-filed application under 37 CFR 1.78(a)(3) should not be construed as meaning that the application is entitled to the benefit of the prior-filed application. In order for the application to be entitled to the benefit of the prior-filed application, all other requirements under 35 U.S.C. §§ 120 and 365(c) and 37 CFR 1.78(a)(1) and (a)(2) must be met. Similarly, the fact that the corrected Filing Receipt accompanying this decision on petition includes the prior-filed application should not be construed as meaning that applicant is entitled to the claim for benefit of priority to the prior-filed application noted thereon. Accordingly, the examiner will, in due course, consider this benefit claim and determine whether the application is entitled to the benefit of the earlier filing date.

A corrected Filing Receipt, which includes the priority claim to the prior-filed application, accompanies this decision on petition.

Any inquiries concerning this decision may be directed to David Bucci at (571) 272-7099. All other inquiries concerning either the examination procedures or status of the application should be directed to the Technology Center.

This application is being forwarded to the examiner of Technology Center Art Unit 3654 for appropriate action on the amendment filed April 28, 2006, including consideration of applicant's entitlement to claim benefit of priority under 35 U.S.C. § 120 and 365(c) to the above-noted, prior-filed PCT application.

Brian Hearn
Petitions Examiner
Office of Petitions

ATTACHMENT: Corrected Filing Receipt

UNITED STATES PATENT AND TRADEMARK OFFICE

UNITED STATES DEPARTMENT OF COMMERCE
United States Patent and Trademark Office
Address: COMMISSIONER FOR PATENTS
P.O. Box 1450
Alexandria, Virginia 22313-1450
www.uspto.gov

APPL NO.	FILING OR 371 (c) DATE	ART UNIT	FIL FEE REC'D	ATTY.DOCKET NO	DRAWINGS	TOT CLMS	IND CLMS
10/739,359	12/18/2003	3654	1400	2001P15108WOUS	2	6	1

CONFIRMATION NO. 9638

46726
JOHN T. WINBURN
100 BOSCH BOULEVARD
NEW BERN, NC 28562

CORRECTED FILING RECEIPT

OC000000019508454

Date Mailed: 07/06/2006

Receipt is acknowledged of this regular Patent Application. It will be considered in its order and you will be notified as to the results of the examination. Be sure to provide the U.S. APPLICATION NUMBER, FILING DATE, NAME OF APPLICANT, and TITLE OF INVENTION when inquiring about this application. Fees transmitted by check or draft are subject to collection. Please verify the accuracy of the data presented on this receipt. **If an error is noted on this Filing Receipt, please mail to the Commissioner for Patents P.O. Box 1450 Alexandria Va 22313-1450. Please provide a copy of this Filing Receipt with the changes noted thereon. If you received a "Notice to File Missing Parts" for this application, please submit any corrections to this Filing Receipt with your reply to the Notice. When the USPTO processes the reply to the Notice, the USPTO will generate another Filing Receipt incorporating the requested corrections (if appropriate).**

Applicant(s)

Silvio Hamm, Sulzfeld, GERMANY;
Manfred Prell, Burglauer, GERMANY;

Assignment For Published Patent Application

BSH Bosch und Siemens Hausgerate GmbH, Munich, GERMANY

Power of Attorney: The patent practitioners associated with Customer Number **000046726**.

Domestic Priority data as claimed by applicant

This application is a CON of PCT/EP02/06593 06/14/2002

Foreign Applications

GERMANY 201 10 821.6 06/29/2001

If Required, Foreign Filing License Granted: 03/29/2004

The country code and number of your priority application, to be used for filing abroad under the Paris Convention, is US10/739,359

Projected Publication Date: Not Applicable

Non-Publication Request: No

Early Publication Request: No

Title

DEVICE FOR STORING A CABLE

Preliminary Class

242

PROTECTING YOUR INVENTION OUTSIDE THE UNITED STATES

Since the rights granted by a U.S. patent extend only throughout the territory of the United States and have no effect in a foreign country, an inventor who wishes patent protection in another country must apply for a patent in a specific country or in regional patent offices. Applicants may wish to consider the filing of an international application under the Patent Cooperation Treaty (PCT). An international (PCT) application generally has the same effect as a regular national patent application in each PCT-member country. The PCT process **simplifies** the filing of patent applications on the same invention in member countries, but **does not result** in a grant of "an international patent" and does not eliminate the need of applicants to file additional documents and fees in countries where patent protection is desired.

Almost every country has its own patent law, and a person desiring a patent in a particular country must make an application for patent in that country in accordance with its particular laws. Since the laws of many countries differ in various respects from the patent law of the United States, applicants are advised to seek guidance from specific foreign countries to ensure that patent rights are not lost prematurely.

Applicants also are advised that in the case of inventions made in the United States, the Director of the USPTO must issue a license before applicants can apply for a patent in a foreign country. The filing of a U.S. patent application serves as a request for a foreign filing license. The application's filing receipt contains further information and guidance as to the status of applicant's license for foreign filing.

Applicants may wish to consult the USPTO booklet, "General Information Concerning Patents" (specifically, the section entitled "Treaties and Foreign Patents") for more information on timeframes and deadlines for filing foreign patent applications. The guide is available either by contacting the USPTO Contact Center at 800-786-9199, or it can be viewed on the USPTO website at http://www.uspto.gov/web/offices/pac/doc/general/index.html.

For information on preventing theft of your intellectual property (patents, trademarks and copyrights), you may wish to consult the U.S. Government website, http://www.stopfakes.gov. Part of a Department of Commerce initiative, this website includes self-help "toolkits" giving innovators guidance on how to protect intellectual property in specific countries such as China, Korea and Mexico. For questions regarding patent enforcement issues, applicants may call the U.S. Government hotline at 1-866-999-HALT (1-866-999-4158).

LICENSE FOR FOREIGN FILING UNDER
Title 35, United States Code, Section 184
Title 37, Code of Federal Regulations, 5.11 & 5.15

GRANTED

The applicant has been granted a license under 35 U.S.C. 184, if the phrase "IF REQUIRED, FOREIGN FILING LICENSE GRANTED" followed by a date appears on this form. Such licenses are issued in all applications where the conditions for issuance of a license have been met, regardless of whether or not a license may be required as set forth in 37 CFR 5.15. The scope and limitations of this license are set forth in 37 CFR 5.15(a) unless an earlier license has been issued under 37 CFR 5.15(b). The license is subject to revocation upon written notification. The date indicated is the effective date of the license, unless an earlier license of similar scope has been granted under 37 CFR 5:13 or 5.14.

This license is to be retained by the licensee and may be used at any time on or after the effective date thereof unless it is revoked. This license is automatically transferred to any related applications(s) filed under 37 CFR 1.53(d). This license is not retroactive.

The grant of a license does not in any way lessen the responsibility of a licensee for the security of the subject matter as imposed by any Government contract or the provisions of existing laws relating to espionage and the national security or the export of technical data. Licensees should apprise themselves of current regulations especially with respect to certain countries, of other agencies, particularly the Office of Defense Trade Controls, Department of State (with respect to Arms, Munitions and Implements of War (22 CFR 121-128)); the Bureau of Industry and Security, Department of Commerce (15 CFR parts 730-774); the Office of Foreign Assets Control, Department of Treasury (31 CFR Parts 500+) and the Department of Energy.

NOT GRANTED

No license under 35 U.S.C. 184 has been granted at this time, if the phrase "IF REQUIRED, FOREIGN FILING LICENSE GRANTED" DOES NOT appear on this form. Applicant may still petition for a license under 37 CFR 5.12, if a license is desired before the expiration of 6 months from the filing date of the application. If 6 months has lapsed from the filing date of this application and the licensee has not received any indication of a secrecy order under 35 U.S.C. 181, the licensee may foreign file the application pursuant to 37 CFR 5.15(b).

SPE RESPONSE FOR CERTIFICATE OF CORRECTION

DATE : June 09, 2008 Paper No.: X

TO SPE OF : ART UNIT 3636

SUBJECT : Request for Certificate of Correction for Appl. No.: 10/739379 Patent No.: 7207574 B2

A response is requested with respect to a request for a certificate of correction.

With respect to the change(s) requested to correct Office and/or Applicant's errors, should the patent read as shown in the certificate of correction attached herewith or the COCIN document(s), in IFW images for the above-identified patented application? No new matter should be introduced, nor should the scope or meaning of the claims be changed.

If the response is for an IFW, within 7 days, please complete and forward the response, to the employee (named below) via scanning into application images, using document code **COCX**.

DO NOT SENT TO ATTORNEY

If the response is for a paper file wrapper, please complete the response and forward the response with the paper file wrapper, to the employee (named below), within 7 days, to:

Certificates of Correction Branch (CofC)
South Tower - 9A22
Palm Location 7580

You can fax the Director/SPE response to 571-270-9990

LAMONTE NEWSOME
Certificates of Correction Branch
703-308-9390 ext. 112

Thank You For Your Assistance

The request for issuing the above-identified correction(s) is hereby:
Note your decision on the appropriate box.

- ☒ **Approved** — All changes apply.
- ☐ **Approved in Part** — Specify below which changes **do not** apply.
- ☐ **Denied** — State the reasons for denial below.

Comments: _____

DAVID DUNN
SUPERVISORY PATENT EXAMINER
SPE

3636
Art Unit

PTOL-306 (REV. 7/03)

U.S. DEPARTMENT OF COMMERCE Patent and Trademark Office

UNITED STATES PATENT AND TRADEMARK OFFICE

CERTIFICATE OF CORRECTION

PATENT NO. : 7207574 B2
APPLICATION NO. : 10/739,379
ISSUE DATE : 04/24/07
INVENTOR(S) : GRADU, MIRCEA

It is certified that error appears in the above-identified patent and that said Letters Patent is hereby corrected as shown below:

The Title Page, showing an illustrative figure, should be deleted and substitute therefor the attached Title Page.

Delete drawings sheets 4 of 5 and 5 of 5 and substitute therefor the drawing sheets, consisting of figs. 6-9 as shown on the attached page.

US007207574B2

2 of 4

(12) **United States Patent**
Gradu et al.

(10) **Patent No.: US 7,207,574 B2**
(45) **Date of Patent: Apr. 24, 2007**

(54) **STABILIZER BAR WITH VARIABLE TORSIONAL STIFFNESS**

(75) Inventors: **Mircea Gradu**, Wooster, OH (US); **Timothy L. Schlernitzauer**, Canton, OH (US)

(73) Assignee: **The Timken Company**, Canton, OH (US)

(*) Notice: Subject to any disclaimer, the term of this patent is extended or adjusted under 35 U.S.C. 154(b) by 451 days.

(21) Appl. No.: **10/739,379**

(22) Filed: **Dec. 18, 2003**

(65) **Prior Publication Data**

US 2004/0217569 A1 Nov. 4, 2004

Related U.S. Application Data

(63) Continuation-in-part of application No. 10/646,077, filed on Aug. 22, 2003, now abandoned.

(60) Provisional application No. 60/467,093, filed on May 1, 2003.

(51) **Int. Cl.**
B60G 17/027 (2006.01)

(52) **U.S. Cl.** **280/5.511**; 267/277

(58) **Field of Classification Search** 280/5.511, 280/5.509, 5.51, 124.107, 124.137, 124.152, 280/124.166; 188/296, 307; 267/277, 191
See application file for complete search history.

(56) **References Cited**

U.S. PATENT DOCUMENTS

3,197,233 A * 7/1965 Klaus et al. 280/5.502
5,791,444 A * 8/1998 Schiffler 188/293
5,826,687 A 10/1998 Büngeler et al.
(Continued)

FOREIGN PATENT DOCUMENTS

DE 4443809 A1 4/1996
(Continued)

OTHER PUBLICATIONS

Brochure, DELPHI Energy & Chassis Systems, 2002, "Dynamic Body Control System".
Brochure, SAE International, Aleksander Hac, Mar. 2002, "Influence of Active Chassis Systems on Vehicle Propensity to Maneuver-Induced Rollovers".

Primary Examiner—David R. Dunn
(74) *Attorney, Agent, or Firm*—Polster, Lieder, Woodruff & Lucchesi, L.C.

(57) **ABSTRACT**

A stabilizer bar for controlling the roll of an automotive vehicle has left and right sections, each provided with a torsion rod and a torque arm. The torsion rods are aligned along a transverse axis and attached to a structural component of the vehicle, while the torque arms are connected to the left and right control arms of the vehicle's suspension system. In addition, the bar has a coupling between the torsion rods of the two sections for controlling the torsional stiffness of the bar. The coupling includes a rotor fitted to one of the torsion rods and a housing fitted to the other torsion rod, with the housing receiving the rotor, such that a cavities exist between the rotor and housing. Both the rotor and housing carry vanes, that alternate so that the vanes of the rotor are located between the vanes of the housing. The cavities contain a magneto-rheological fluid. The bar also includes an electrical coil controls the viscosity of the fluid either at the coupling or at a valve located remote from the coupling, but in either place, such that the variations in the viscosity of the fluid control the torsional stiffness of the stabilizer bar.

12 Claims, 5 Drawing Sheets

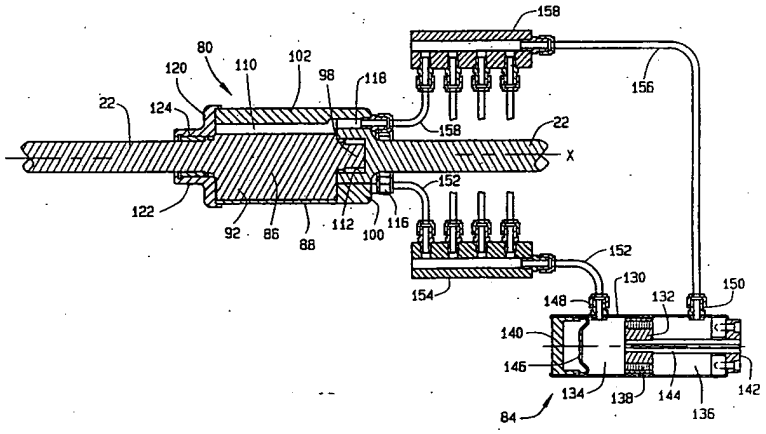

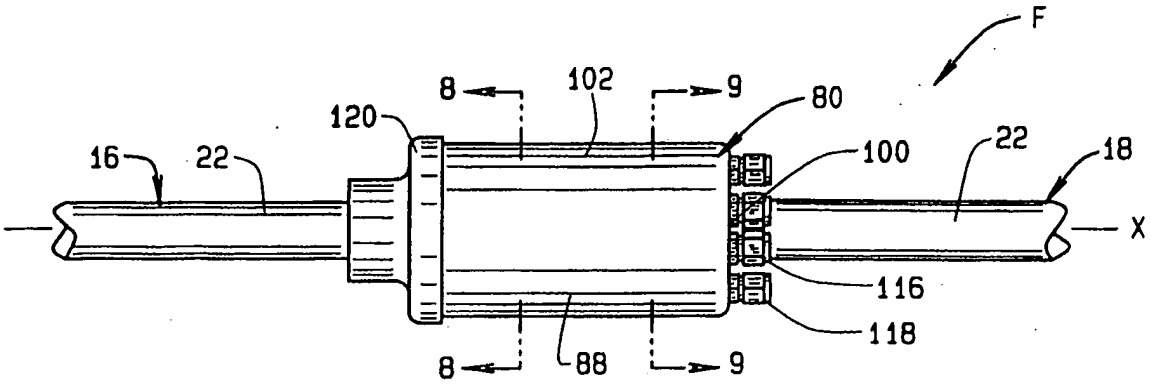

FIG. 6

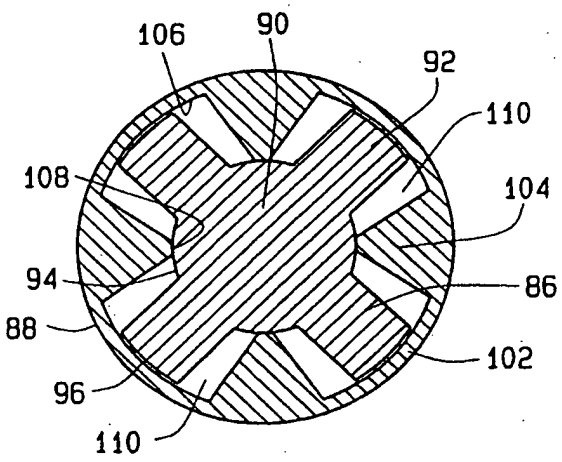

FIG. 8

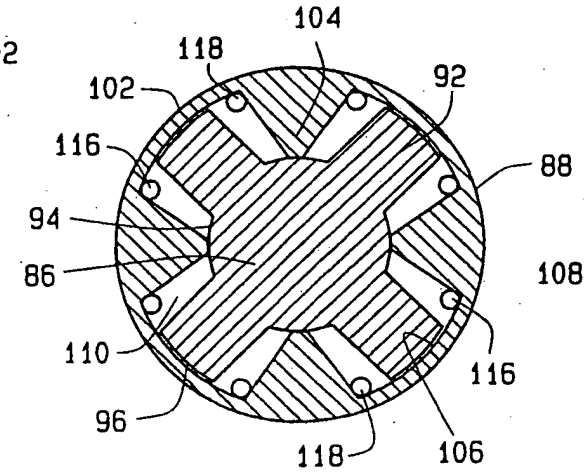

FIG. 9

4 of 4

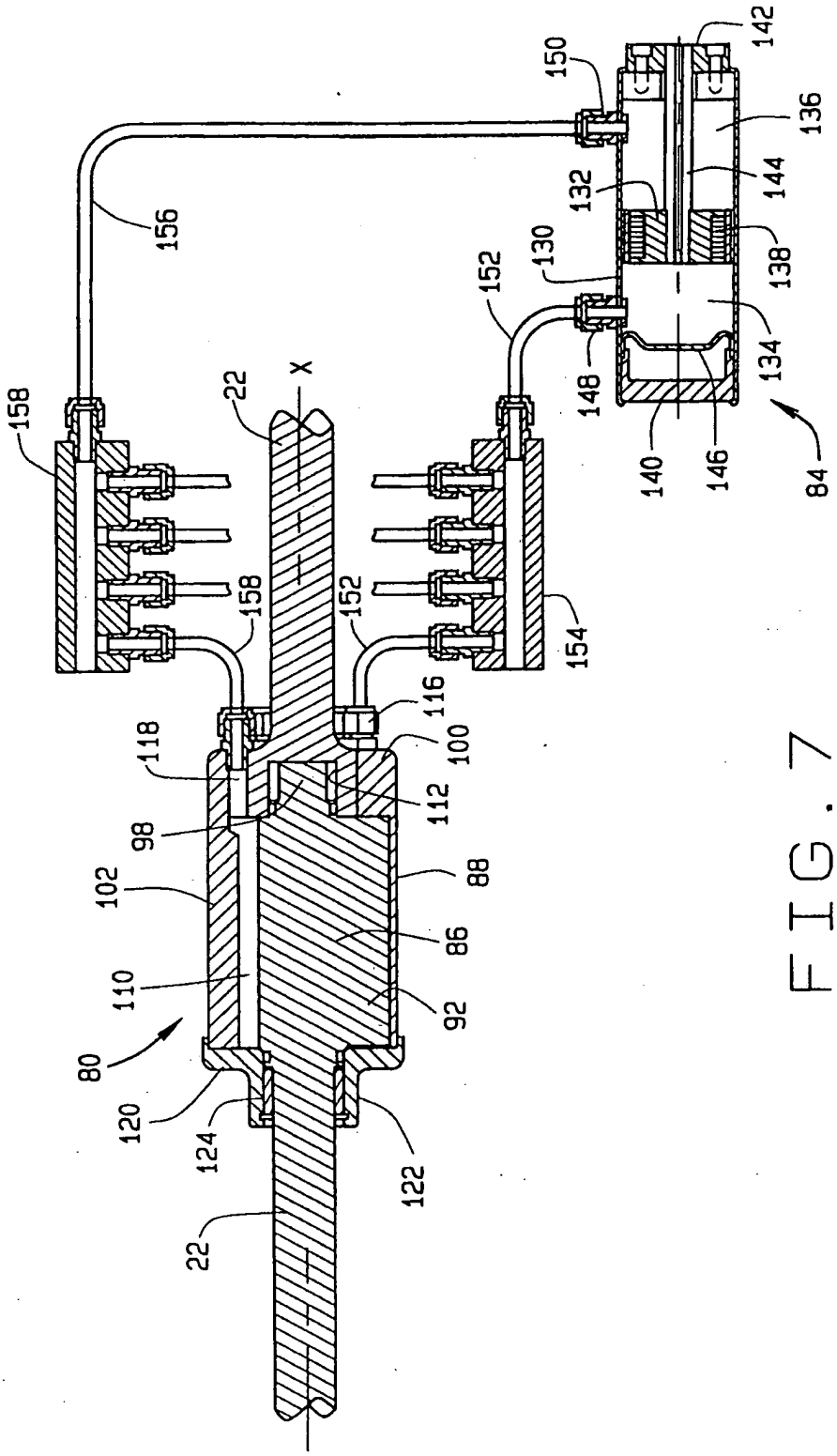
142
150
136
144
132
130
138
152
134
148
140
146
84
156
158
22
X
158
152
154
116
118
100
112
98
102
88
86
110
92
80
120
124
122
22

FIG. 7

UNITED STATES PATENT AND TRADEMARK OFFICE

UNITED STATES DEPARTMENT OF COMMERCE
United States Patent and Trademark Office
Address: COMMISSIONER FOR PATENTS
P.O. Box 1450
Alexandria, Virginia 22313-1450
www.uspto.gov

Christopher M. Goff (27839)
ARMSTRONG TEASDALE LLP
7700 Forsyth Boulevard
Suite 1800
St. Louis, MO 63105

Mail Date: 08/03/2010

Applicant	: Xiaomin Zhang	: DECISION ON REQUEST FOR
Patent Number	: 7662745	: RECALCULATION of PATENT
Issue Date	: 02/16/2010	: TERM ADJUSTMENT IN VIEW
Application No	: 10/739,385	: OF WYETH AND NOTICE OF INTENT TO
Filed	: 12/18/2003	: ISSUE CERTIFICATE OF CORRECTION
		:

The Request for Recalculation is **GRANTED** to the extent indicated.

The patent term adjustment has been determined to be **1179** days. The USPTO will *sua sponte* issue a certificate of correction reflecting the amount of PTA days determined by the recalculation.

Prior to the issuance of the certificate of correction, the USPTO will afford patentee an opportunity to be heard and request reconsideration. Accordingly, patentee has **one month or thirty (30) days**, whichever is longer, to file a request for reconsideration of this patent term adjustment calculation. See 35 U.S.C. 154(b)(3)(B)(ii) and 37 CFR 1.322(a)(4). No extensions of time will be granted under 37 CFR 1.136.

Patentee should use document code PET.OP if electronically filing a request for reconsideration of this patent term adjustment calculation. The patentee must also include the information required by 37 CFR 1.705(b)(2) and the fee required by 37 CFR 1.18(e). If patentee does not file a timely request for reconsideration of this patent term adjustment calculation including the information required by 37 CFR 1.705(b)(2) and the fee required by 37 CFR 1.18(e), the USPTO will issue a certificate of correction reflecting the PTA determination noted above.

Patentee should be aware that in order to preserve the right to review in the United States District Court for the District of Columbia of the USPTO patent term adjustment determination, patentee must ensure that he or she also take the steps required under 35 U.S.C. 154(b)(4)(A) in a timely manner. Nothing in the request for recalculation should be construed as providing an alternative time frame for commencing a civil action under 35 U.S.C. 154(b)(4)(A).

Any questions concerning this decision should be directed to the Office of Patent Legal Administration at 571-272-7702.

UNITED STATES PATENT AND TRADEMARK OFFICE

Commissioner for Patents
United States Patent and Trademark Office
P.O. Box 1450
Alexandria, VA 22313-1450
www.uspto.gov

FULBRIGHT & JAWORSKI, LLP
666 FIFTH AVE
NEW YORK, NY 10103-3198

COPY MAILED

JUL 23 2009

OFFICE OF PETITIONS

In re Application of Miyazono et al. :
Application No. 10/739,413 : Decision on Petition
Filing Date: December 19, 2003 :
Attorney Docket No. NY-LUD 5539-US2-DIV :

This is a decision on the petition under 37 CFR 1.181 filed January 5, 2009, requesting the Office withdraw the holding of abandonment.

The petition is **dismissed**.

Any request for reconsideration must be submitted within TWO (2) MONTHS from the mail date of this decision. Extensions of time under 37 CFR 1.136(a) are NOT permitted. The reconsideration request should include a cover letter entitled "Renewed Petition under 37 CFR 1.181."

Procedural History

A final Office action was filed August 8, 2007.

A reply was filed November 6, 2007.

An Advisory Action was mailed November 28, 2007.

A Notice of Appeal and payment for a three-month extension of time were filed February 11, 2008.

An amendment was filed February 20, 2008.

An Advisory Action was mailed April 2, 2008.

A Notice of Abandonment was mailed November 14, 2008. The Notice states the application is abandoned due to petitioner's failure to file a reply to the August 8, 2007 Office action.

Discussion

Petitioner contends the application is not abandoned. Specifically, petitioner contends a Request for Continued Examination (RCE), copy of the February 20, 2008 amendment, and credit card authorization form were timely or facsimile transmitted on April 11, 2008.

In support of the petition, petitioner has submitted:

(1) A copy of the RCE and amendment previously transmitted,
(2) A copy of a Certificate of Transmission indicating the RCE, amendment, and credit card authorization were transmitted on April 11, 2008,
(3) A copy of an "Auto-Reply Facsimile Transmission" from the Office,
(4) A copy of from petitioner's facsimile transmission confirming 8 pages were successfully transmitted to the Office on "April 11."

One may prove the timely filing of papers by providing a showing in compliance with 37 CFR 1.8(b).

37 CFR 1.8(b) states,

> In the event that correspondence is considered timely filed by being mailed or transmitted in accordance with paragraph (a) of this section, but not received in the U.S. Patent and Trademark Office after a reasonable amount of time has elapsed from the time of mailing or transmitting of the correspondence, or after the application is held to be abandoned, ... the correspondence will be considered timely if the party who forwarded such correspondence:
>
> (1) ...
> (2) ...
> (3) Includes a statement which attests on a personal knowledge basis or to the satisfaction of the Director to the previous timely mailing or transmission. If the correspondence was sent by facsimile transmission, a copy of the sending unit's report confirming transmission may be used to support this statement.

The instant petition does not comply with requirement (3) above. Specifically, the petition is not accompanied by a statement by the individual with personal knowledge regarding the timely mailing of the correspondence. Fani Malikouzakis signed the Certificate of Transmission. Therefore, the Office assumes Fani Malikouzakis is the individual who transmitted the and a statement from Fani Malikouzakis should be supplied.

Unless filed by EFS web, further correspondence with respect to this matter should be addressed as follows:

By mail: Mail Stop Petition
Commissioner for Patents
P.O. Box 1450
Alexandria, VA 22313-1450

By facsimile: (571) 273-8300
Attn: Office of Petitions

By hand: U.S. Patent and Trademark Office
Customer Service Window
Randolph Building
401 Dulany Street
Alexandria, VA 22314

Telephone inquiries regarding this communication should be directed to Petitions Attorney Steven Brantley at (571) 272-3203.

Charles Steven Brantley
Senior Petitions Attorney
Office of Petitions

UNITED STATES PATENT AND TRADEMARK OFFICE

Commissioner for Patents
United States Patent and Trademark Office
P.O. Box 1450
Alexandria, VA 22313-1450
www.uspto.gov

FULBRIGHT & JAWORSKI L.L.P.
Mary Anne Schofield
801 Pennsylvania Avenue, N.W.
Washington, DC 20004-2623

COPY MAILED

SEP 18 2009

OFFICE OF PETITIONS

In re Application of Miyazono et al. :
Application No. 10/739,413 : Decision on Petition
Filing Date: December 19, 2003 :
Attorney Docket No. NY-LUD 5539-US2-DIV :

This is a decision on the petition under 37 CFR 1.181 filed August 4, 2009, requesting the Office withdraw the holding of abandonment.

The petition is **granted.**

Procedural History

A final Office action was filed August 8, 2007.

A reply was filed November 6, 2007.

An Advisory Action was mailed November 28, 2007.

A Notice of Appeal and payment for a three-month extension of time were filed February 11, 2008.

An amendment was filed February 20, 2008.

An Advisory Action was mailed April 2, 2008.

A Notice of Abandonment was mailed November 14, 2008. The Notice states the application is abandoned due to petitioner's failure to file a reply to the August 8, 2007 Office action.

Discussion

Petitioner contends the application is not abandoned. Specifically, petitioner contends a Request for Continued Examination (RCE), copy of the February 20, 2008 amendment, and credit card authorization form were timely or facsimile transmitted on April 11, 2008.

In support of the petition, petitioner has submitted:

(1) A copy of the RCE and amendment previously transmitted,

(2) A copy of a Certificate of Transmission indicating the RCE, amendment, and credit card authorization were transmitted on April 11, 2008,
(3) A copy of an "Auto-Reply Facsimile Transmission" from the Office,
(4) A copy of from petitioner's facsimile transmission confirming 8 pages were successfully transmitted to the Office on "April 11," and
(5) A statement from Fani Malikouzakis who signed the Certificate of Transmission.

The evidence supplied by petitioner complies with the requirements set forth in 37 CFR 1.8(b) and establishes a RCE, a copy of the February 20, 2009 amendment, and a credit card authorization form were filed April 11, 2009.

The Notice of Abandonment is hereby vacated and the holding of abandonment withdrawn.

Although petitioner has supplied evidence establishing a credit card authorization form was previously filed, neither the copy of the RCE filed with the prior petition on January 5, 2009, nor the copy of the RCE filed with the instant petition are accompanied by a new credit card authorization form for the RCE fee. Therefore, the Office has charged the $405 RCE fee to the deposit account listed on the RCE.

Technology Center Art Unit 1647 will be informed of the instant decision and the application, including the copy of the RCE and amendment filed January 5, 2009, will be further examined in due course.

Telephone inquiries regarding this communication should be directed to Petitions Attorney Steven Brantley at (571) 272-3203.

Charles Steven Brantley
Senior Petitions Attorney
Office of Petitions

UNITED STATES PATENT AND TRADEMARK OFFICE

COMMISSIONER FOR PATENTS
UNITED STATES PATENT AND TRADEMARK OFFICE
P.O. BOX 1450
ALEXANDRIA, VA 22313-1450
www.uspto.gov

Paper No.

EDWARDS & ANGELL, LLP
P.O. BOX 55874
BOSTON, MA 02205

COPY MAILED

JUL 24 2006

OFFICE OF PETITIONS

In re Application of :
Hirai et al. : DECISION ON PETITION
Application No. 10/739,452 :
Filed: December 17, 2003 :
Atty Docket No. 60490 (50498) :

This is a decision on the "PETITION REQUESTING WITHDRAWAL OF HOLDING OF ABANDONMENT, UNDER 37 CFR 1.181(a)" filed May 17, 2006.

The above-identified application became abandoned for failure to file a timely and proper reply to the NOTICE TO FILE MISSING PARTS OF NONPROVISIONAL APPLICATION mailed March 30, 2004. The Notice set a two-month time limit for applicants to pay additional claim fees in the amount of $290 (for a non-small entity), with extensions of time obtainable under § 1.136(a). No reply considered received and no extension obtained, the above-identified application became abandoned on May 31, 2004. A Notice of Abandonment was mailed on May 4, 2006.

Within two months thereof, applicants filed the instant petition. Applicants contend that the application is not in fact abandoned. Applicants contend that they timely submitted all necessary papers and paid all necessary fees. In support thereof, applicants submitted a copy of their postcard receipt and a copy of the response as petitioners maintain it was mailed on April 6, 2004.

A postcard receipt, which itemizes and properly identifies the items, which are being filed, serves as *prima facie* evidence of receipt in the Office of all items listed thereon on the date

stamped thereon by the Office. See MPEP 503. A review of petitioners' postcard receipt reveals that: 1) it was date stamped as received in the USPTO on April 9, 2004; 2) it specifically identifies the items being filed, including "Check in the amount of $145" and 3) it lacks any annotation of non-receipt of any item denoted on the postcard. Thus, petitioners' evidence is persuasive that the response to the Notice to File Missing Parts of Application was timely filed. (It is further noted that the response as re-supplied includes a certificate of mailing dated April 6, 2004, and thus, may also be considered timely filed pursuant to § 1.8(b)).

A review of the application record further reveals that the $145 fee was previously processed on April 12, 2004.

In view thereof, the Notice of Abandonment mailed May 4, 2006 is **VACATED** and the holding of abandonment is hereby **WITHDRAWN**.

The petition under § 1.181 is **GRANTED**.

No fee is required on petition under § 1.181.

The Office of Initial Patent Examination (OIPE) has been advised of this decision. The application file is, thereby, forwarded to OIPE's technical support staff to withdraw the holding of abandonment.

Telephone inquiries specific to this decision should be directed to the undersigned at (571) 272-3219.

Nancy Johnson
Senior Petitions Attorney
Office of Petitions

UNITED STATES PATENT AND TRADEMARK OFFICE

Commissioner for Patents
United States Patent and Trademark Office
P.O. Box 1450
Alexandria, VA 22313-1450
www.uspto.gov

COPY MAILED

SEP 17 2007

OFFICE OF PETITIONS

MERCK AND CO., INC
P O BOX 2000
RAHWAY NJ 07065-0907

In re Application of :
Beher : DECISION ON APPLICATION
Application No. 10/739,485 : FOR PATENT TERM ADJUSTMENT
Filed: December 18, 2003 :
Atty. Dkt. No.: T1609 :

This is a decision on the "REQUEST FOR RECONSIDERATION OF PATENT TERM ADJUSTMENT," filed March 12, 2007. This matter is being properly treated under 37 CFR 1.705(b) as an application for patent term adjustment.

The application for patent term adjustment ("PTA") under 37 CFR 1.705(b) is hereby **GRANTED**.

The correct Patent Term Adjustment ("PTA") at the time of the allowance is 427 days. The Office will adjust the PAIR screen to reflect that the Patent Term Adjustment (PTA) determination at the time of mailing of the instant letter reflects an adjustment of 427 days. A copy of the updated PAIR screen showing the correct determination is enclosed.

Applicants request that the Determination of Patent Term Adjustment be corrected from 348 days, as indicated on the Determination of Patent Term Adjustment mailed December 20, 2006, to an adjustment of 427 days.

Applicant argues that the supplemental response to the non-final Office action submitted December 7, 2006 was submitted at the suggestion of the examiner, and, thus, not a failure to engage in reasonable efforts to conclude prosecution within the meaning of 37 CFR 1.704(c)(8).

While a review of the record does not reveal an examiner interview summary to this effect, the applicant's arguments have been reviewed and found convincing. Accordingly, the submission of the supplemental reply on December 7, 2006 is not deemed a failure to engage in reasonable efforts to conclude prosecution within the meaning of 37 CFR 1.704(c)(8), the reply having been deemed "expressly requested" by the examiner.

Accordingly, at the time of allowance, the application is entitled to an adjustment of 427 days, as argued by applicants.

As authorized, the required PTA application fee of $200.00 has been charge to applicant's deposit account.

Applicants are further advised that the patent term adjustment indicated in the patent will include any additional patent term accrued pursuant to §§ 1.702(a)(4) and 1.702(b).

The application file is being forwarded to the Office of Patent Publications for issuance of a patent.

Telephone inquiries specific to this matter should be directed to Petitions Attorney Alesia M. Brown at (571) 272-3215.

Kery A. Fries

Kery Fries
Senior Legal Advisor
Office of Patent Legal Administration
Office of Deputy Commissioner
for Patent Examination Policy

Enclosure: Adjusted PAIR Calculation

Day : Wednesday

PALM INTRANET

Date: 9/5/2007
Time: 14:55:54

PTA Calculations for Application: 10/739485			
Application Filing Date:	12/18/2003	PTO Delay (PTO):	427
Issue Date of Patent:		Three Years:	0
Pre-Issue Petitions:	0	Applicant Delay (APPL):	79
Post-Issue Petitions:	0	Total PTA (days):	427
PTO Delay Adjustment:	79		

File Contents History

Number	Date	Contents Description	PTO	APPL	START
48	09/05/2007	ADJUSTMENT OF PTA CALCULATION BY PTO	79		
34	12/20/2006	MAIL NOTICE OF ALLOWANCE			
33	12/15/2006	ISSUE REVISION COMPLETED			
32	12/15/2006	DOCUMENT VERIFICATION			
31	12/15/2006	NOTICE OF ALLOWANCE DATA VERIFICATION COMPLETED			
30	12/15/2006	CASE DOCKETED TO EXAMINER IN GAU			
29	12/11/2006	NOTICE OF ALLOWABILITY			
28	11/27/2006	EXAMINER INTERVIEW SUMMARY RECORD (PTOL - 413)			
27	12/11/2006	DATE FORWARDED TO EXAMINER			
26	12/07/2006	SUPPLEMENTAL RESPONSE		79	22
24	10/12/2006	CASE DOCKETED TO EXAMINER IN GAU			
23	09/28/2006	DATE FORWARDED TO EXAMINER			
22	09/19/2006	RESPONSE AFTER NON-FINAL ACTION			
21	06/27/2006	MAIL NON-FINAL REJECTION			
20	06/22/2006	NON-FINAL REJECTION			
19	04/26/2004	INFORMATION DISCLOSURE STATEMENT CONSIDERED			
18	05/24/2006	DATE FORWARDED TO EXAMINER			
17	05/18/2006	RESPONSE TO ELECTION / RESTRICTION FILED			
16	04/21/2006	MAIL RESTRICTION REQUIREMENT	427		-1
15	04/17/2006	REQUIREMENT FOR RESTRICTION / ELECTION			
14	03/25/2006	CASE DOCKETED TO EXAMINER IN GAU			
13	04/26/2004	INFORMATION DISCLOSURE STATEMENT (IDS) FILED			
12	05/04/2004	IFW TSS PROCESSING BY TECH CENTER			

		COMPLETE			
11	12/18/2003	PRELIMINARY AMENDMENT			
10	04/30/2004	CASE DOCKETED TO EXAMINER IN GAU			
9	03/30/2004	APPLICATION RETURN FROM OIPE			
8	03/30/2004	APPLICATION RETURN TO OIPE			
7	03/29/2004	APPLICATION DISPATCHED FROM OIPE			
6	03/30/2004	APPLICATION IS NOW COMPLETE			
5	03/04/2004	CLEARED BY L&R (LARS)			
4	02/19/2004	REFERRED TO LEVEL 2 (LARS) BY OIPE CSR			
3	02/19/2004	CASE CLASSIFIED BY OIPE			
2	01/08/2004	IFW SCAN & PACR AUTO SECURITY REVIEW			
1	12/18/2003	INITIAL EXAM TEAM NN			

Search Another: Application# [ ] Search

EXPLANATION OF PTA CALCULATION

EXPLANATION OF PTE CALCULATION

To go back use Back button on your browser toolbar.

Back to PALM | ASSIGNMENT | OASIS | Home page

UNITED STATES PATENT AND TRADEMARK OFFICE

UNITED STATES DEPARTMENT OF COMMERCE
United States Patent and Trademark Office
Address: COMMISSIONER FOR PATENTS
P.O. Box 1450
Alexandria, Virginia 22313-1450
www.uspto.gov

VMWARE, INC.
DARRYL SMITH
3401 Hillview Ave.
PALO ALTO, CA 94304

Mail Date: 04/20/2010

Applicant	: Derek L. Bruening	: DECISION ON REQUEST FOR
Patent Number	: 7603704	: RECALCULATION of PATENT
Issue Date	: 10/13/2009	: TERM ADJUSTMENT IN VIEW
Appliction No	: 10/739,499	: OF WYETH AND NOTICE OF INTENT TO
Filed	: 12/18/2003	: ISSUE CERTIFICATE OF CORRECTION
		:

The Request for Recalculation is **GRANTED** to the extent indicated.

The patent term adjustment has been determined to be **625** days. The USPTO will *sua sponte* issue a certificate of correction reflecting the amount of PTA days determined by the recalculation.

Prior to the issuance of the certificate of correction, the USPTO will afford patentee an opportunity to be heard and request reconsideration. Accordingly, patentee has **one month or thirty (30) days**, whichever is longer, to file a request for reconsideration of this patent term adjustment calculation. See 35 U.S.C. 154(b)(3)(B)(ii) and 37 CFR 1.322(a)(4). No extensions of time will be granted under 37 CFR 1.136.

Patentee should use document code PET.OP if electronically filing a request for reconsideration of this patent term adjustment calculation. The patentee must also include the information required by 37 CFR 1.705(b)(2) and the fee required by 37 CFR 1.18(e). If patentee does not file a timely request for reconsideration of this patent term adjustment calculation including the information required by 37 CFR 1.705(b)(2) and the fee required by 37 CFR 1.18(e), the USPTO will issue a certificate of correction reflecting the PTA determination noted above.

Patentee should be aware that in order to preserve the right to review in the United States District Court for the District of Columbia of the USPTO patent term adjustment determination, patentee must ensure that he or she also take the steps required under 35 U.S.C. 154(b)(4)(A) in a timely manner. Nothing in the request for recalculation should be construed as providing an alternative time frame for commencing a civil action under 35 U.S.C. 154(b)(4)(A).

Any questions concerning this decision should be directed to the Office of Patent Legal Administration at 571-272-7702.

UNITED STATES PATENT AND TRADEMARK OFFICE

Commissioner for Patents
United States Patent and Trademark Office
P.O. Box 1450
Alexandria, VA 22313-1450
www.uspto.gov

INTEL/BLAKELY
1279 OAKMEAD PARKWAY
SUNNYVALE CA 94085-4040

COPY MAILED

MAR 2 4 2008

OFFICE OF PETITIONS

In re Application of :
Connor, et al. :
Application No. 10/739,503 : DECISION ON PETITION
Filed: December 16, 2003 :
Attorney Docket No. 042390.P18278 :

This is a decision on the petition under the unintentional provisions of 37 CFR 1.137(b), filed March 3, 2008, to revive the above-identified application.

The petition is **GRANTED**.

The application became abandoned June 23, 2007 for failure to timely submit a proper reply to the non-final Office action mailed March 22, 2007. The non-final Office action set a three month shortened statutory period of time for reply. No petition for extension of time was timely submitted. Notice of Abandonment was mailed October 18, 2007.

The petition satisfies the requirements of 37 CFR 1.137(b) in that petitioners have supplied (1) the reply in the form of an amendment, (2) the required petition fee, and (3) a proper statement of unintentional delay.

Telephone inquiries concerning this decision should be directed to the undersigned at (571) 272-3205.

This application is being referred to Technology Center AU 2600 for appropriate action by the Examiner in the normal course of business on the reply received March 3, 2008.

Alesia M. Brown
Petitions Attorney
Office of Petitions

UNITED STATES PATENT AND TRADEMARK OFFICE

UNITED STATES DEPARTMENT OF COMMERCE
United States Patent and Trademark Office
Address: COMMISSIONER FOR PATENTS
P.O. Box 1450
Alexandria, Virginia 22313-1450
www.uspto.gov

MORRISON & FOERSTER LLP
755 PAGE MILL RD
PALO ALTO, CA 94304-1018

Mail Date: 04/21/2010

Applicant	: Karen L. Fearon	: DECISION ON REQUEST FOR
Patent Number	: 7625872	: RECALCULATION of PATENT
Issue Date	: 12/01/2009	: TERM ADJUSTMENT IN VIEW
Appliction No	: 10/739,518	: OF WYETH AND NOTICE OF INTENT TO
Filed	: 12/17/2003	: ISSUE CERTIFICATE OF CORRECTION
		:

The Request for Recalculation is **GRANTED** to the extent indicated.

The patent term adjustment has been determined to be **675** days. The USPTO will *sua sponte* issue a certificate of correction reflecting the amount of PTA days determined by the recalculation.

Prior to the issuance of the certificate of correction, the USPTO will afford patentee an opportunity to be heard and request reconsideration. Accordingly, patentee has **one month or thirty (30) days**, whichever is longer, to file a request for reconsideration of this patent term adjustment calculation. See 35 U.S.C. 154(b)(3)(B)(ii) and 37 CFR 1.322(a)(4). No extensions of time will be granted under 37 CFR 1.136.

Patentee should use document code PET.OP if electronically filing a request for reconsideration of this patent term adjustment calculation. The patentee must also include the information required by 37 CFR 1.705(b)(2) and the fee required by 37 CFR 1.18(e). If patentee does not file a timely request for reconsideration of this patent term adjustment calculation including the information required by 37 CFR 1.705(b)(2) and the fee required by 37 CFR 1.18(e), the USPTO will issue a certificate of correction reflecting the PTA determination noted above.

Patentee should be aware that in order to preserve the right to review in the United States District Court for the District of Columbia of the USPTO patent term adjustment determination, patentee must ensure that he or she also take the steps required under 35 U.S.C. 154(b)(4)(A) in a timely manner. Nothing in the request for recalculation should be construed as providing an alternative time frame for commencing a civil action under 35 U.S.C. 154(b)(4)(A).

Any questions concerning this decision should be directed to the Office of Patent Legal Administration at 571-272-7702.

UNITED STATES PATENT AND TRADEMARK OFFICE

UNITED STATES DEPARTMENT OF COMMERCE
United States Patent and Trademark Office
Address: COMMISSIONER FOR PATENTS
P.O. Box 1450
Alexandria, Virginia 22313-1450
www.uspto.gov

DORITY & MANNING, P.A.
POST OFFICE BOX 1449
GREENVILLE, SC 29602-1449

Mail Date: 04/21/2010

Applicant	: Fung-Jou Chen	: DECISION ON REQUEST FOR
Patent Number	: 7591040	: RECALCULATION of PATENT
Issue Date	: 09/22/2009	: TERM ADJUSTMENT IN VIEW
Appliction No	: 10/739,530	: OF WYETH AND NOTICE OF INTENT TO
Filed	: 12/18/2003	: ISSUE CERTIFICATE OF CORRECTION
		:

The Request for Recalculation is **GRANTED** to the extent indicated.

The patent term adjustment has been determined to be **461** days. The USPTO will *sua sponte* issue a certificate of correction reflecting the amount of PTA days determined by the recalculation.

Prior to the issuance of the certificate of correction, the USPTO will afford patentee an opportunity to be heard and request reconsideration. Accordingly, patentee has **one month or thirty (30) days**, whichever is longer, to file a request for reconsideration of this patent term adjustment calculation. See 35 U.S.C. 154(b)(3)(B)(ii) and 37 CFR 1.322(a)(4). No extensions of time will be granted under 37 CFR 1.136.

Patentee should use document code PET.OP if electronically filing a request for reconsideration of this patent term adjustment calculation. The patentee must also include the information required by 37 CFR 1.705(b)(2) and the fee required by 37 CFR 1.18(e). If patentee does not file a timely request for reconsideration of this patent term adjustment calculation including the information required by 37 CFR 1.705(b)(2) and the fee required by 37 CFR 1.18(e), the USPTO will issue a certificate of correction reflecting the PTA determination noted above.

Patentee should be aware that in order to preserve the right to review in the United States District Court for the District of Columbia of the USPTO patent term adjustment determination, patentee must ensure that he or she also take the steps required under 35 U.S.C. 154(b)(4)(A) in a timely manner. Nothing in the request for recalculation should be construed as providing an alternative time frame for commencing a civil action under 35 U.S.C. 154(b)(4)(A).

Any questions concerning this decision should be directed to the Office of Patent Legal Administration at 571-272-7702.

UNITED STATES PATENT AND TRADEMARK OFFICE

Commissioner for Patents
United States Patent and Trademark Office
P.O. Box 1450
Alexandria, VA 22313-1450
www.uspto.gov

BACON & THOMAS, PLLC
625 SLATERS LANE
FOURTH FLOOR
ALEXANDRIA VA 22314

COPY MAILED

MAR 3 0 2007

OFFICE OF PETITIONS

In re Patent No. 7,148,282 :
Application No. 10/739,534 :
Filed: December 19, 2003 : ON PETITION
Issued: December 12, 2006 :
Attorney Docket No. CRF D-3275 :

This is a decision on the petition filed December 14, 2006, which is being treated as a request under 37 CFR 3.81(b)[1] to include an omitted assignee on the front page of the above-identified patent by way of a Certificate of Correction.

The request is **GRANTED**.

The patent file is being forwarded to the Certificates of Correction Branch for issuance of the requested Certificate of Correction.

Telephone inquiries concerning this decision may be directed to Petitions Examiner Liana Walsh at (571) 272-3206. Inquiries regarding the issuance of a certificate of correction should be directed to the Certificate of Correction Branch at (571) 272-4200.

Frances Hicks
Petitions Examiner
Office of Petitions

[1] *See* MPEP 1309, subsection II; and Official Gazette of June 22, 2004.

UNITED STATES PATENT AND TRADEMARK OFFICE

Commissioner for Patents
United States Patent and Trademark Office
P.O. Box 1450
Alexandria, VA 22313-1450
www.uspto.gov

HEWLETT PACKARD COMPANY
PO BOX 272400
3404 E. HARMONY ROAD
INTELLECTUAL PROPERTY ADMINISTRATION
FORT COLLINS CO 80527-2400

COPY MAILED

APR 29 2008

OFFICE OF PETITIONS

In re Application of :
Darren J. Cepulis :
Application No. 10/739,540 : DECISION GRANTING PETITION
Filed: December 18, 2003 : UNDER 37 CFR 1.137(b)
Attorney Docket No. 200313475-1 :

This is a decision on the petition under 37 CFR 1.137(b), filed August 31, 2007, to revive the above-identified application.

The petition is **GRANTED**.

The petition satisfies the conditions for revival pursuant to the provisions of 37 CFR 1.137(b) in that (1) the reply in the form of the issue and publication fees; (2) the petition fee; and (3) the required statement of unintentional delay have been received. Accordingly, the reply to the Notice of Allowance mailed May 15, 2007, is accepted as having been unintentionally delayed.

There is no indication that the person signing the petition was ever given a power of attorney to prosecute the application. If the person signing the petition desires to receive future correspondence regarding this application, the appropriate power of attorney documents must be submitted.

Telephone inquiries concerning this decision should be directed to the undersigned at (571) 272-3208.

This application is being referred to the Office of Patent Publication to be processed into a patent.

Karen Creasy

Karen Creasy
Petitions Examiner
Office of Petitions

UNITED STATES PATENT AND TRADEMARK OFFICE

UNITED STATES DEPARTMENT OF COMMERCE
United States Patent and Trademark Office
Address: COMMISSIONER FOR PATENTS
P.O. Box 1450
Alexandria, Virginia 22313-1450
www.uspto.gov

APPLICATION NO.	FILING DATE	FIRST NAMED INVENTOR	ATTORNEY DOCKET NO.	CONFIRMATION NO.
10/739,544	12/18/2003	James E. Masino	1391-30103	1301

23505 7590 10/28/2005

CONLEY ROSE, P.C.
P. O. BOX 3267
HOUSTON, TX 77253-3267

EXAMINER	
LEYKIN, RITA	
ART UNIT	**PAPER NUMBER**
2837	

DATE MAILED: 10/28/2005

Please find below and/or attached an Office communication concerning this application or proceeding.

UNITED STATES PATENT AND TRADEMARK OFFICE

Commissioner for Patents
United States Patent and Trademark Office
P.O. Box 1450
Alexandria, VA 22313-1450
www.uspto.gov

CONLEY ROSE, P.C.
P. O. Box 3267
Houston, TX 77253-3267

OCT 2 1 2005

In re Application of:
James E. Masino
Serial No.: 10/739,544
Filed: December 18, 2003
Attorney Docket No.: **1391-30103**

DECISION ON PETITION TO WITHDRAW HOLDING OF ABANDONMENT

This is a decision on the petition filed March 31, 2005, to withdraw the holding of abandonment in the above-identified application under 37 C.F.R. § 1.181. No fee is required.

The petition is **GRANTED.**

The application was held abandoned for failure to timely file a response to the Office letter mailed on October 08, 2004. A Notice of Abandonment was mailed on April 04, 2005.

Petitioner asserts that on October 26, 2004, a response was timely filed in the above-identified application. To support this assertion, petitioner has submitted a copy of a 12 page response bearing a certificate under 37 CFR 1.8(a) showing a date of transmission of October 26, 2004, a copy of an "Auto-Reply Facsimile Transmission" report from the USPTO which acknowledges satisfactory facsimile transmission of 12 pages on October 26, 2004, and a statement from Daniel J. Krueger, to the previous timely transmission of the response to the USPTO.

A review of the application file record reveals that the above-identified response is not of record in the application file and cannot be located. However, 37 CFR § 1.8(b) provides for accepting a correspondence as being timely filed if it was mailed or transmitted in accordance with 37 CFR § 1.8(a), and is reproduced below:

> *In the event that correspondence is considered timely filed by being mailed or transmitted in accordance with paragraph (a) of this section, but not received in the Patent and Trademark Office, and the application is held to be abandoned or the proceeding is dismissed, terminated, or decided with prejudice, the correspondence will be considered timely if the party who forwarded such correspondence: (1) informs the Office of the previous mailing or transmission of the correspondence promptly after becoming aware that the Office has no evidence of receipt of the correspondence; (2) supplies an additional copy of the previously mailed or transmitted correspondence and certificate; and (3) includes a statement which attests on a personal knowledge basis or to the*

> *satisfaction of the Commissioner to the previous timely mailing or transmission. If the correspondence was sent by facsimile transmission, a copy of the sending unit's report confirming transmission may be used to support this statement.*

The petition, meets the conditions of 37 CFR 1.8(b) to establish the previous timely filing of the response. Accordingly, the petition is **granted.**

For the above stated reason, the Notice of Abandonment is hereby vacated and the holding of abandonment withdrawn. The application is restored to pending status.

The copy of the response submitted on March 31, 2005, is accepted since the response originally submitted was apparently lost.

The application file is being forwarded to the Technology Center 2800 support staff for entry of the response. From there, the application will be forwarded to the examiner for further examination.

Inquiries regarding this decision should be directed to Clayton E. LaBalle at (571) 272-1594.

Richard K. Seidel, Director
Technology Center 2800
Semiconductors, Electrical and Optical
Systems and Components

UNITED STATES PATENT AND TRADEMARK OFFICE

UNITED STATES DEPARTMENT OF COMMERCE
United States Patent and Trademark Office
Address: COMMISSIONER FOR PATENTS
P.O. Box 1450
Alexandria, Virginia 22313-1450
www.uspto.gov

IBM Corporation
IP Law Dept IQ0A, Bldg 40-3
1701 North Street
Endicott, NY 13760

Mail Date: 04/21/2010

Applicant	: Geraldine Blackwood	: DECISION ON REQUEST FOR
Patent Number	: 7616756	: RECALCULATION of PATENT
Issue Date	: 11/10/2009	: TERM ADJUSTMENT IN VIEW
Appliction No	: 10/739,563	: OF WYETH AND NOTICE OF INTENT TO
Filed	: 12/18/2003	: ISSUE CERTIFICATE OF CORRECTION
		:

The Request for Recalculation is **GRANTED** to the extent indicated.

The patent term adjustment has been determined to be **1726** days. The USPTO will *sua sponte* issue a certificate of correction reflecting the amount of PTA days determined by the recalculation.

Prior to the issuance of the certificate of correction, the USPTO will afford patentee an opportunity to be heard and request reconsideration. Accordingly, patentee has **one month or thirty (30) days**, whichever is longer, to file a request for reconsideration of this patent term adjustment calculation. See 35 U.S.C. 154(b)(3)(B)(ii) and 37 CFR 1.322(a)(4). No extensions of time will be granted under 37 CFR 1.136.

Patentee should use document code PET.OP if electronically filing a request for reconsideration of this patent term adjustment calculation. The patentee must also include the information required by 37 CFR 1.705(b)(2) and the fee required by 37 CFR 1.18(e). If patentee does not file a timely request for reconsideration of this patent term adjustment calculation including the information required by 37 CFR 1.705(b)(2) and the fee required by 37 CFR 1.18(e), the USPTO will issue a certificate of correction reflecting the PTA determination noted above.

Patentee should be aware that in order to preserve the right to review in the United States District Court for the District of Columbia of the USPTO patent term adjustment determination, patentee must ensure that he or she also take the steps required under 35 U.S.C. 154(b)(4)(A) in a timely manner. Nothing in the request for recalculation should be construed as providing an alternative time frame for commencing a civil action under 35 U.S.C. 154(b)(4)(A).

Any questions concerning this decision should be directed to the Office of Patent Legal Administration at 571-272-7702.

UNITED STATES PATENT AND TRADEMARK OFFICE

Commissioner for Patents
United States Patent and Trademark Office
P.O. Box 1450
Alexandria, VA 22313-1450
www.uspto.gov

STEVENS LAW GROUP
P.O. BOX 1667
SAN JOSE, CA 95109

COPY MAILED

AUG 31 2006

OFFICE OF PETITIONS

In re Application of :
Sarah A. Vogel :
Application No. 10/739,574 : DECISION ON PETITION
Filed: December 17, 2003 : UNDER 37 CFR 1.78(a)(3)
Attorney Docket No. VOGL-00201 :

This is a decision on the petition under 37 CFR 1.78(a)(3), filed May 5, 2006, to accept an unintentionally delayed claim under 35 U.S.C. §120 for the benefit of priority to the prior-filed nonprovisional application set forth in the concurrently filed amendment.

The petition is **DISMISSED.**

A petition for acceptance of a claim for late priority under 37 CFR 1.78(a)(3) is only applicable to those applications filed on or after November 29, 2000. Further, the petition is appropriate only after the expiration of the period specified in 37 CFR 1.78(a)(2)(ii). In addition, the petition under 37 CFR 1.78(a)(3) must be accompanied by:

(1) the reference required by 35 U.S.C. § 120 and 37 CFR 1.78(a)(2)(i) of the prior-filed application, unless previously submitted;
(2) the surcharge set forth in § 1.17(t); and
(3) a statement that the entire delay between the date the claim was due under 37 CFR 1.78(a)(2)(ii) and the date the claim was filed was unintentional. The Director may require additional information where there is a question whether the delay was unintentional.

The petition does not comply with items (1) and (3) above.

As to item (1), 37 CFR 1.78(a)(2)(i) requires that any nonprovisional application claiming the benefit of one or more prior-filed copending nonprovisional applications must contain or be amended to contain a reference to each such prior-filed application, identifying it by application

number (consisting of the series code and serial number) and indicating the relationship of the applications. The relationship between the applications is whether the subject application is a continuation, divisional, or continuation-in-part of a prior-filed nonprovisional application. An example of a proper benefit claim is: "This application is a continuation of Application No. 10/---, filed---." A benefit claim that merely states: "This application claims the benefit of Application No. 10/---, filed---," does not comply with 37 CFR 1.72(a)(2)(i) since the proper relationship, which includes the type of continuing application, is not stated. Also, the status of each nonprovisional parent application (if it is patented or abandoned) should also be indicated, following the filing date of the parent nonprovisional application. *See* MPEP Section 201.11, Reference to Prior Nonprovisional Applications. The amendment fails to comply with the provisions of 37 CFR 1.78(a)(2)(i) and is therefore unacceptable.

Before the petition under 37 CFR § 1.78(a)(3) can be granted, a renewed petition under 37 CFR § 1.78(a)(3) an Application Data Sheet or a substitute amendment (complying with 37 CFR 1.121 and 37 CFR 1.76(b)(5)), referencing the prior-filed nonprovisional application and stating the relationship of the prior-filed application to this application, are required.

It is also noted that the reference required by 35 U.S.C. § 120 and 37 CFR § 1.78(a)(2)(i) to the prior filed non-provisional application is set forth in an amendment that is embedded in a document titled "Petition to Claim Priority Under 37 CFR § 1.16(d)." Because the amendment is not contained on a paper separate from the petition, the amendment does not comply with 37 CFR §§ 1.4 and 1.121 that provide, in pertinent part,

> ***§ 1.4 Nature of correspondence and signature requirements***
>
> (c) Since different matters may be considered by different branches or sections of the United States Patent and Trademark Office, each distinct subject, inquiry, or order must be contained in a separate paper to avoid confusion and delay in answering papers dealing with different subjects.
>
> ***§ 1.121 Manner of making amendments in applications***
>
> (a) *Amendments in applications, other than reissue applications.* Amendments in applications, other than reissue applications, are made by filing a paper, in compliance with § 1.52, directing that specified amendments be made.

Based on the aforementioned, the amendment containing the required reference to the prior filed application is not acceptable and, therefore, neither the amendment nor the reference to the prior-filed application contained therein can be entered. The petition under 37 CFR 1.78(a)(3) must be dismissed because petitioner has failed to include the reference required by 35 U.S.C. § 120 and 37 CFR § 1.78(a)(2)(i) to the prior filed non-provisional application.

Petitioner may file a renewed petition under 37 CFR 1.78(a)(3) along with an amendment, contained on a paper separate from the petition, requesting amendment of the priority claim to include the reference to the prior-filed non-provisional application.

As to item (3) above, the required statement of unintentional delay was not found in the instant petition. In order to be considered grantable, the renewed petition must include a statement that the entire delay between the date the claim was due under 37 CFR 1.78(a)(2)(ii) and the date the claim was filed was unintentional.

Further correspondence with respect to this matter should be addressed as follows:

By mail: Mail Stop PETITIONS
Commissioner for Patents
Post Office Box 1450
Alexandria, VA 22313-1450

By hand: Customer Service Window
Mail Stop Petitions
Randolph Building
401 Dulany Street
Alexandria, VA 22314

By fax: (571) 273-8300
ATTN: Office of Petitions

Any questions concerning this matter may be directed to Kenya A. McLaughlin, Petitions Attorney, at (571) 272-3222.

Frances Hicks
Lead Petitions Examiner
Office of Petitions

UNITED STATES PATENT AND TRADEMARK OFFICE

Commissioner for Patents
United States Patent and Trademark Office
P.O. Box 1450
Alexandria, VA 22313-1450
www.uspto.gov

STEVENS LAW GROUP
P.O. BOX 1667
SAN JOSE, CA 95109

COPY MAILED

SEP 0 2 2008

OFFICE OF PETITIONS

In re Application of	:	DECISION ON PETITION
Sarah A. Vogel	:	UNDER 37 CFR 1.78(a)(3)
Application No. 10/739,574	:	AND
Filed: December 17, 2003	:	NOTICE OF ABANDONMENT
Attorney Docket No. VOGL-00201	:	

This is a decision on the renewed petition under 37 CFR 1.78(a)(3), filed October 3, 2006, to accept an unintentionally delayed claim under 35 U.S.C. §120 for the benefit of priority to the prior-filed nonprovisional application set forth in the concurrently filed amendment.

The petition is **DISMISSED.**

It is also noted that the application is abandoned as of December 14, 2006.

A review of the application file history reveals that a final Office action was mailed September 13, 2006, allowing a shortened statutory period for reply of three month from its mailing date. Extensions of the time set for reply were available pursuant to 37 CFR 1.136. An amendment was filed on October 2, 2006. By an Advisory Action mailed October 17, 2006, applicant was advised that the amendment of October 3, 2006, would not be entered. No further responses were filed within the allowable period, and the application became abandoned on December 14, 2006.

A petition for acceptance of a claim for late priority under 37 CFR 1.78(a)(3) is only applicable to those applications filed on or after November 29, 2000. Further, the petition is appropriate only after the expiration of the period specified in 37 CFR 1.78(a)(2)(ii). In addition, the petition under 37 CFR 1.78(a)(3) must be accompanied by:

(1) the reference required by 35 U.S.C. § 120 and 37 CFR 1.78(a)(2)(i) of the prior-filed application, unless previously submitted;
(2) the surcharge set forth in § 1.17(t); and

(3) a statement that the entire delay between the date the claim was due under 37 CFR 1.78(a)(2)(ii) and the date the claim was filed was unintentional. The Director may require additional information where there is a question whether the delay was unintentional.

The petition does not comply with item (1) above.

It is noted that Examiner Robyn Doan determined that the amendment filed October 3, 2006, which also contains the reference required by 35 U.S.C. § 120 and 37 CFR 1.78(a)(2)(i) of the prior-filed application would not be entered. An amendment to the specification or an Application Data Sheet (ADS) filed after a final rejection will be treated pursuant to 37 CFR 1.116. Petitioner is advised that an amendment after final rejection is not entered as matter of right. See MPEP §714.12. As Examiner Doan has determined that the amendment filed October 3, 2006, cannot be entered, any renewed petition under 37 CFR 1.78 must be accompanied by a Request for Continued Examination under 37 CFR 1.114 and the required fee.

It is again noted that the petition under 37 CFR 1.78 is embedded in a document titled "Substitute Amendment." Because the amendment is not contained on a paper separate from the petition, the amendment does not comply with 37 CFR §§ 1.4 and 1.121 that provide, in pertinent part,

> ***§ 1.4 Nature of correspondence and signature requirements***
>
> (c) Since different matters may be considered by different branches or sections of the United States Patent and Trademark Office, each distinct subject, inquiry, or order must be contained in a separate paper to avoid confusion and delay in answering papers dealing with different subjects.
>
> ***§ 1.121 Manner of making amendments in applications***
>
> (a) *Amendments in applications, other than reissue applications.* Amendments in applications, other than reissue applications, are made by filing a paper, in compliance with § 1.52, directing that specified amendments be made.

Based on the aforementioned, the amendment containing the required reference to the prior filed application is not acceptable. The renewed petition and the reference required by 35 U.S.C. § 120 and 37 CFR § 1.78(a)(2)(i) to the prior filed non-provisional application must be contained in separate documents.

Further correspondence with respect to this matter should be addressed as follows:

By mail:	Mail Stop PETITIONS Commissioner for Patents Post Office Box 1450 Alexandria, VA 22313-1450
By hand:	Customer Service Window Mail Stop Petitions Randolph Building 401 Dulany Street Alexandria, VA 22314
By fax:	(571) 273-8300 ATTN: Office of Petitions

Any questions concerning this matter may be directed to Kenya A. McLaughlin, Petitions Attorney, at (571) 272-3222.

Anthony Knight
Supervisor
Office of Petitions

UNITED STATES PATENT AND TRADEMARK OFFICE

Commissioner for Patents
United States Patent and Trademark Office
P.O. Box 1450
Alexandria, VA 22313-1450
www.uspto.gov

STEVENS LAW GROUP
P.O. BOX 1667
SAN JOSE, CA 95109

COPY MAILED
DEC 22 2008
OFFICE OF PETITIONS

In re Application of	:	DECISION ON PETITIONS
Sarah A. Vogel	:	UNDER 37 CFR 1.78(a)(3)
Application No. 10/739,574	:	AND
Filed: December 17, 2003	:	UNDER 37 CFR 1.137(b)
Attorney Docket No. VOGL-00201	:	

This is a decision on the "Renewed Petition to Claim Priority under 37 CFR 1.78(a)(3), filed September 10, 2008, to accept an unintentionally delayed claim under 35 U.S.C. §120 for the benefit of priority to the prior-filed applications set forth in the concurrently filed amendment. The petition will also be treated as a petition under 37 CFR 1.137(b) to revive the subject application.

The renewed petition under 37 CFR 1.78 is **DISMISSED.**

The petition under 37 CFR 1.137(b) is also **DISMISSED.**

A review of the application file history reveals that a final Office action was mailed September 13, 2006, allowing a shortened statutory period for reply of three month from its mailing date. Extensions of the time set for reply were available pursuant to 37 CFR 1.136. An amendment was filed on October 2, 2006. By an Advisory Action mailed October 17, 2006, applicant was advised that the amendment of October 3, 2006, would not be entered. No further responses were filed within the allowable period, and the application became abandoned on December 14, 2006. A petition under 37 CFR 1.78(a)(3) was first filed on May 5, 2006, and dismissed by a decision mailed August 31, 2006. A renewed petition under 37 CFR 1.78(a)(3) was filed on October 3, 2006, and dismissed by a decision mailed September 2, 2008.

TREATMENT UNDER 37 CFR 1.78(a)(3)

A petition for acceptance of a claim for late priority under 37 CFR 1.78(a)(3) is only applicable to those applications filed on or after November 29, 2000. Further, the petition is appropriate only after the expiration of the period specified in 37 CFR 1.78(a)(2)(ii). In addition, the petition under 37 CFR 1.78(a)(3) must be accompanied by:

(1) the reference required by 35 U.S.C. § 120 and 37 CFR 1.78(a)(2)(i) of the prior-filed application, unless previously submitted;

(2) the surcharge set forth in § 1.17(t); and

(3) a statement that the entire delay between the date the claim was due under 37 CFR 1.78(a)(2)(ii) and the date the claim was filed was unintentional. The Director may require additional information where there is a question whether the delay was unintentional.

The petition does not comply with item (1) above.

It is noted that Examiner Robyn Doan previously determined that the amendment filed October 3, 2006, which also contained the reference required by 35 U.S.C. § 120 and 37 CFR 1.78(a)(2)(i) of the prior-filed application, would not be entered. An amendment to the specification or an Application Data Sheet (ADS) filed after a final rejection will be treated pursuant to 37 CFR 1.116. Petitioner is advised that an amendment after final rejection is not entered as matter of right. See MPEP §714.12. As Examiner Doan has determined that the amendment cannot be entered, any renewed petition filed under 37 CFR 1.78 must be accompanied by a Request for Continued Examination under 37 CFR 1.114 and the required fee. A Request for Continued Examination under 37 CFR 1.114 did not accompany the instant renewed petition. Any renewed petition under 37 CFR 1.78(a)(3) filed must be accompanied by a Request for Continued Examination under 37 CFR 1.114.

TREATMENT UNDER 37 CFR 1.137(b)

Effective December 1, 1997, the provisions of 37 CFR 1.137(b) now provide that where the delay in reply was unintentional, a petition may be filed to revive an abandoned application or a lapsed patent pursuant to 37 CFR 1.137(b). A grantable petition pursuant to 37 CFR 1.137(b) must be accompanied by:

(1) the required reply, unless previously filed. In a non-provisional application abandoned for failure to prosecute, the required reply may be met by the filing of a continuing application. In an application or patent, abandoned or lapsed for failure to pay the issue fee, or any portion thereof, the required reply must be the payment of the issue fee or any outstanding balance thereof.

(2) the petition fee as set forth in 37 CFR 1.17(m);

(3) a statement that the entire delay in filing the required reply from the due date for the reply until the filing of a grantable petition pursuant to 37 CFR 1.137(b) was unintentional. The Commissioner may require additional information where there is a question whether the delay was unintentional; and

(4) any terminal disclaimer (and fee set forth in 37 CFR 1.20(d)) required pursuant to 37 CFR 1.137(c).

The petition does not comply with item (1) above.

To revive the subject application, a proper response to the final Office action mailed September 13, 2006, must be filed. In this case, the most appropriate response to the final Office action would be a Request for Continued Examination under 37 CFR 1.114. In order to be considered grantable, the renewed petition under 37 CFR 1.137(b) must be accompanied by a proper response to the final Office action mailed September 13, 2006.

Further correspondence with respect to this matter should be addressed as follows:

By mail:	Mail Stop PETITIONS Commissioner for Patents Post Office Box 1450 Alexandria, VA 22313-1450
By hand:	Customer Service Window Mail Stop Petitions Randolph Building 401 Dulany Street Alexandria, VA 22314
By fax:	(571) 273-8300 ATTN: Office of Petitions

Any questions concerning this matter may be directed to Kenya A. McLaughlin, Petitions Attorney, at (571) 272-3222.

Anthony Knight
Supervisor
Office of Petitions

UNITED STATES PATENT AND TRADEMARK OFFICE

COMMISSIONER FOR PATENTS
UNITED STATES PATENT AND TRADEMARK OFFICE
P.O. BOX 1450
ALEXANDRIA, VA 22313-1450
www.uspto.gov

Kristina Bieker-Brady, Ph.D.
Clark & Elbing, LLP
101 Federal St
Boston MA 02110

COPY MAILED

SEP 14 2007

OFFICE OF PETITIONS

In re Patent No. 7,189,503 :
Issued: March 13, 2007 : LETTER REGARDING PTA AND
Application No. 10/739,585 : CERTIFICATE OF CORRECTION
Filed: December 18, 2003 :
Atty. Dkt. No.: 50334/003005 :

This letter is in response to the "LETTER REGARDING PATENT TERM ADJUSTMENT," filed January 26, 2007. The Office thanks patentees for their good faith and candor in bringing this to our attention.

The above-identified application matured into U.S. Patent No. 7,189,503 on March 13, 2007. The patent issued with a patent term adjustment (PTA) of 75 days. Prior to issuance of the patent, applicants indicated that the pre-allowance adjustment of 122 days indicated in the Determination of Patent Term Adjustment mailed December 13, 2006 appeared to be longer than appropriate.

A review of the application history reveals that an adjustment of 293 days can be attributed to the Office in accordance with 37 CFR 1.702(a)(1) and 1.703(a)(1).

The adjustment is properly reduced 100 days in accordance with 37 CFR 1.704(b) in connection with the reply submitted November 3, 2004 to the Notice to File Missing Parts mailed April 26, 2004.

The adjustment is further reduced 77 days in accordance with 37 CFR 1.704(b) in connection with the reply filed May 24, 2006 in response to the non-final Office action mailed December 8, 2005.

The adjustment is further reduced two days in accordance with 37 CFR 1.704(b) in connection with the reply filed October 27, 2006 in response to the final Office action mailed July 25, 2006.

After the mailing of the Notice of Allowance, the PTA was reduced 47 days due to the submission of a paper filed on

January 26, 2007. Accordingly, at the time of issuance, the patent was entitled to an adjustment of 67 days.

As applicants are advising us of a potential error in providing too much patent term adjustment in this application, no fee is due in connection to this matter.

This application file will be forwarded to the Certificate of Corrections branch for issuance of a certificate of correction to indicate that the term of this patent is extended or adjusted under 35 U.S.C. 154(b) by 67 days.

Telephone inquiries specific to this matter should be directed to Petitions Attorney Alesia M. Brown at (571) 272-3205.

Kery A. Fries

Kery Fries
Senior Legal Advisor
Office of Patent Legal Administration
Office of Deputy Commissioner
for Patent Examination Policy

CC: Draft Certificate of Correction

UNITED STATES PATENT AND TRADEMARK OFFICE

CERTIFICATE OF CORRECTION

PATENT	:	7,189,503 B2
DATED	:	March 13, 2007
INVENTOR(S)	:	Akeson, et al.

It is certified that error appears in the above-identified patent and that said Letters Patent is hereby corrected as shown below:

On the cover page,

[*] Notice: Subject to any disclaimer, the term of this patent is extended or adjusted under 35 USC 154(b) by 75 days

Delete the phrase "by 75 days" and insert – by 67 days--

UNITED STATES PATENT AND TRADEMARK OFFICE

Commissioner for Patents
United States Patent and Trademark Office
P.O. Box 1450
Alexandria, VA 22313-1450
www.uspto.gov

JOHN T. WINBURN
100 BOSCH BOULEVARD
NEW BERN NC 28562

COPY MAILED
JUN 21 2006
OFFICE OF PETITIONS

In re Application of	:	
Helmut JERG et al.	:	DECISION ON PETITIONS
Application No. 10/739,625	:	UNDER 37 CFR 1.183 AND
Filed: December 18, 2003	:	UNDER 37 CFR 1.78(a)(3)
Attorney Docket No. 2001P13010WOUS	:	

This is a decision on the petition under 37 CFR 1.183, filed March 20, 2006, requesting waiver of 37 CFR 1.78(a)(3) as that rule operates in conjunction with 37 CFR 1.17(t), and a decision on the petition under 37 CFR 1.78(a)(3), filed April 28, 2006, to accept an unintentionally delayed claim under 35 U.S.C. § 120 and 365(c) for the benefit of priority to prior-filed PCT Application No. PCT/EP02/06517, filed June 13, 2002, set forth in the accompanying Application Data Sheet.

The petition under 37 CFR 1.183 is **DISMISSED** as moot in view of the request filed April 28, 2006, withdrawing the petition to waive the surcharge fee requirement of 37 CFR 1.78(a)(3). No fee has been assessed to petitioner's deposit account for the petition under 37 CFR 1.183.

The petition under 37 CFR 1.78(a)(3) is **GRANTED.**

A petition for acceptance of a claim for late priority under 37 CFR 1.78(a)(3) is only applicable to those applications filed on or after November 29, 2000. Further, the petition is appropriate only after the expiration of the period specified in 37 CFR 1.78(a)(2)(ii). In addition, the petition under 37 CFR 1.78(a)(3) must be accompanied by:

(1) the reference required by 35 U.S.C. § 120 and 37 CFR 1.78(a)(2)(i) of the prior-filed application, unless previously submitted;
(2) the surcharge set forth in § 1.17(t); and
(3) a statement that the entire delay between the date the claim was due under 37 CFR 1.78(a)(2)(ii) and the date the claim was filed was unintentional. The Commissioner may require additional information where there is a question whether the delay was unintentional.

All the above requirements having been satisfied, the late claim for priority under 35 U.S.C. § 120 and 365(c) is accepted as being unintentionally delayed.

The granting of the petition to accept the delayed benefit claim to the prior-filed application under 37 CFR 1.78(a)(3) should not be construed as meaning that the application is entitled to the benefit of the prior-filed application. In order for the application to be entitled to the benefit of the prior-filed application, all other requirements under 35 U.S.C. §§ 120 and 365(c) and 37 CFR 1.78(a)(1) and (a)(2) must be met. Similarly, the fact that the corrected Filing Receipt accompanying this decision on petition includes the prior-filed application should not be construed as meaning that applicant is entitled to the claim for benefit of priority to the prior-filed application noted thereon. Accordingly, the examiner will, in due course, consider this benefit claim and determine whether the application is entitled to the benefit of the earlier filing date.

A corrected Filing Receipt, which includes the priority claim to the prior-filed application, accompanies this decision on petition.

Any inquiries concerning this decision may be directed to David Bucci at (571) 272-7099. All other inquiries concerning either the examination procedures or status of the application should be directed to the Technology Center.

This application is being forwarded to the examiner of Technology Center Art Unit 3752 for appropriate action on the amendment filed April 28, 2006, including consideration of applicant's entitlement to claim benefit of priority under 35 U.S.C. § 120 and 365(c) to the above-noted, prior-filed PCT application.

Brian Hearn
Petitions Examiner
Office of Petitions

ATTACHMENT: Corrected Filing Receipt

UNITED STATES PATENT AND TRADEMARK OFFICE

UNITED STATES DEPARTMENT OF COMMERCE
United States Patent and Trademark Office
Address: COMMISSIONER FOR PATENTS
P.O. Box 1450
Alexandria, Virginia 22313-1450
www.uspto.gov

APPL NO.	FILING OR 371 (c) DATE	ART UNIT	FIL FEE REC'D	ATTY.DOCKET NO	DRAWINGS	TOT CLMS	IND CLMS
10/739,625	12/18/2003	3752	900	2001P13010WOUS	2	11	1

CONFIRMATION NO. 6552

46726
JOHN T. WINBURN
100 BOSCH BOULEVARD
NEW BERN, NC 28562

REPLACEMENT FILING RECEIPT

OC000000019347617

Date Mailed: 06/20/2006

Receipt is acknowledged of this regular Patent Application. It will be considered in its order and you will be notified as to the results of the examination. Be sure to provide the U.S. APPLICATION NUMBER, FILING DATE, NAME OF APPLICANT, and TITLE OF INVENTION when inquiring about this application. Fees transmitted by check or draft are subject to collection. Please verify the accuracy of the data presented on this receipt. **If an error is noted on this Filing Receipt, please mail to the Commissioner for Patents P.O. Box 1450 Alexandria Va 22313-1450. Please provide a copy of this Filing Receipt with the changes noted thereon. If you received a "Notice to File Missing Parts" for this application, please submit any corrections to this Filing Receipt with your reply to the Notice. When the USPTO processes the reply to the Notice, the USPTO will generate another Filing Receipt incorporating the requested corrections (if appropriate).**

Applicant(s)

Helmut Jerg, Giengen, GERMANY;
Stefan A. Staedel, Ingolstadt, GERMANY;

Assignment For Published Patent Application

BSH Bosch und Siemens Hausgerate GmbH, Munich, GERMANY

Power of Attorney: The patent practitioners associated with Customer Number **000046726**.

Domestic Priority data as claimed by applicant

This application is a CON of PCT/EP02/06517 06/13/2002

Foreign Applications

GERMANY 10130607.5 06/26/2001

If Required, Foreign Filing License Granted: 03/30/2004

The country code and number of your priority application, to be used for filing abroad under the Paris Convention, is US10/739,625

Projected Publication Date: Not Applicable

Non-Publication Request: No

Early Publication Request: No

Title

Fire protection device for domestic appliances

Preliminary Class

169

PROTECTING YOUR INVENTION OUTSIDE THE UNITED STATES

Since the rights granted by a U.S. patent extend only throughout the territory of the United States and have no effect in a foreign country, an inventor who wishes patent protection in another country must apply for a patent in a specific country or in regional patent offices. Applicants may wish to consider the filing of an international application under the Patent Cooperation Treaty (PCT). An international (PCT) application generally has the same effect as a regular national patent application in each PCT-member country. The PCT process **simplifies** the filing of patent applications on the same invention in member countries, but **does not result** in a grant of "an international patent" and does not eliminate the need of applicants to file additional documents and fees in countries where patent protection is desired.

Almost every country has its own patent law, and a person desiring a patent in a particular country must make an application for patent in that country in accordance with its particular laws. Since the laws of many countries differ in various respects from the patent law of the United States, applicants are advised to seek guidance from specific foreign countries to ensure that patent rights are not lost prematurely.

Applicants also are advised that in the case of inventions made in the United States, the Director of the USPTO must issue a license before applicants can apply for a patent in a foreign country. The filing of a U.S. patent application serves as a request for a foreign filing license. The application's filing receipt contains further information and guidance as to the status of applicant's license for foreign filing.

Applicants may wish to consult the USPTO booklet, "General Information Concerning Patents" (specifically, the section entitled "Treaties and Foreign Patents") for more information on timeframes and deadlines for filing foreign patent applications. The guide is available either by contacting the USPTO Contact Center at 800-786-9199, or it can be viewed on the USPTO website at http://www.uspto.gov/web/offices/pac/doc/general/index.html.

For information on preventing theft of your intellectual property (patents, trademarks and copyrights), you may wish to consult the U.S. Government website, http://www.stopfakes.gov. Part of a Department of Commerce initiative, this website includes self-help "toolkits" giving innovators guidance on how to protect intellectual property in specific countries such as China, Korea and Mexico. For questions regarding patent enforcement issues, applicants may call the U.S. Government hotline at 1-866-999-HALT (1-866-999-4158).

LICENSE FOR FOREIGN FILING UNDER
Title 35, United States Code, Section 184
Title 37, Code of Federal Regulations, 5.11 & 5.15

GRANTED

The applicant has been granted a license under 35 U.S.C. 184, if the phrase "IF REQUIRED, FOREIGN FILING LICENSE GRANTED" followed by a date appears on this form. Such licenses are issued in all applications where the conditions for issuance of a license have been met, regardless of whether or not a license may be required as set forth in 37 CFR 5.15. The scope and limitations of this license are set forth in 37 CFR 5.15(a) unless an earlier license has been issued under 37 CFR 5.15(b). The license is subject to revocation upon written notification. The date indicated is the effective date of the license, unless an earlier license of similar scope has been granted under 37 CFR 5.13 or 5.14.

This license is to be retained by the licensee and may be used at any time on or after the effective date thereof unless it is revoked. This license is automatically transferred to any related applications(s) filed under 37 CFR 1.53(d). This license is not retroactive.

The grant of a license does not in any way lessen the responsibility of a licensee for the security of the subject matter as imposed by any Government contract or the provisions of existing laws relating to espionage and the national security or the export of technical data. Licensees should apprise themselves of current regulations especially with respect to certain countries, of other agencies, particularly the Office of Defense Trade Controls, Department of State (with respect to Arms, Munitions and Implements of War (22 CFR 121-128)); the Bureau of Industry and Security, Department of Commerce (15 CFR parts 730-774); the Office of Foreign Assets Control, Department of Treasury (31 CFR Parts 500+) and the Department of Energy.

NOT GRANTED

No license under 35 U.S.C. 184 has been granted at this time, if the phrase "IF REQUIRED, FOREIGN FILING LICENSE GRANTED" DOES NOT appear on this form. Applicant may still petition for a license under 37 CFR 5.12, if a license is desired before the expiration of 6 months from the filing date of the application. If 6 months has lapsed from the filing date of this application and the licensee has not received any indication of a secrecy order under 35 U.S.C. 181, the licensee may foreign file the application pursuant to 37 CFR 5.15(b).

UNITED STATES PATENT and TRADEMARK OFFICE
UNDER SECRETARY OF COMMERCE FOR INTELLECTUAL PROPERTY AND
DIRECTOR OF THE UNITED STATES PATENT AND TRADEMARK OFFICE
WASHINGTON, D.C. 20231
WWW.USPTO.GOV

Mailed:

RPG
Paper No. 4/9/07

In re Application of Kung-Chung Hsu et al.
Serial No.: 10/739,636
Filed: December 17, 2003

DECISION ON PETITION
UNDER *37 CFR 1.48(a)*

For: METHOD FOR PORCESSING CERAMIC POWDER SUSPENSION

This is a decision on the PETITION TO CORRECT INVENTORSHIP IN A NON-PROVISIONAL PATENT APPLICATION filed November 22, 2006 to correct inventorship under 37 CFR 1.48(a) by adding the name of Dao-Shinn Hwung to the list of inventors of the instant application.

It is noted that the applicant has met the requirements of 37 C.F.R. § 1.48(a) by (1) submitting a request to correct the inventorship that sets forth the desired inventorship change; (2) providing a statement from each person being added as an inventor that the error in inventorship occurred without deceptive intention on his or her part; (3) providing a declaration of the actual inventors as required by 37 C.F.R. § 1.63; (4) providing the processing fee set forth in 1.17(i); and, (5) providing the written consent of the assignee.

The request is **GRANTED**.

The application file is being forwarded to the appropriate section of the Patent and Trademark Office for correction of the record.

Randy Gulakowski
Supervisory Patent Examiner
Art Unit 1712
Technology Center 1700

Law Offices of John Chupa & Associates, P.C.
28535 Orchard Lake Road
Suite 50
Farmington Hills, MI 48334

UNITED STATES PATENT AND TRADEMARK OFFICE

Commissioner for Patents
United States Patent and Trademark Office
P.O. Box 1450
Alexandria, VA 22313-1450
www.uspto.gov

The Weintraub Group, P.L.C.
28580 Orchard Lake Road, Suite 140
Farmington Hills MI 48334

COPY MAILED

JUL 0 2 2009

OFFICE OF PETITIONS

In re Application of :
Kung-Chung Hsu et al. :
Application No. 10/739,636 : DECISION ON PETITION
Filed: December 17, 2003 :
Attorney Docket No. XIN-141-A-1 :

This is a decision on the petition under the unintentional provisions of 37 CFR 1.137(b), filed March 20, 2009, to revive the above-identified application.

The petition is **GRANTED**.

The application became abandoned for failure to reply in a timely manner to the Notice of Non-Compliant Amendment, mailed October 29, 2007. The Notice set a period for reply of one (1) months or thirty (30) days whichever is longer. No extensions of time under the provisions of 37 CFR 1.136(a) were obtained. Accordingly, the application became abandoned on November 30, 2007.

The petition satisfies the requirements of 37 CFR 1.137(b) in that petitioner has supplied (1) the reply in the form of an amendment, (2) the petition fee of $810, and (3) a proper statement of unintentional delay.

It is not apparent whether the person signing the statement of unintentional delay was in a position to have firsthand or direct knowledge of the facts and circumstances of the delay at issue. Nevertheless, such statement is being treated as having been made as the result of a reasonable inquiry into the facts and circumstances of such delay. See 37 CFR 10.18(b) and Changes to Patent Practice and Procedure; Final Rule Notice, 62 Fed. Reg. 53131, 53178 (October 10, 1997), 1203 Off. Gaz. Pat. Office 63, 103 (October 21, 1997). In the event that such an inquiry has not been made, petitioner must make such an inquiry. If such inquiry results in the discovery that it is not correct that the entire delay in filing the required reply from the due date for the reply until the filing of a grantable petition pursuant to 37 CFR 1.137(b) was unintentional, petitioner must notify the Office.

Telephone inquiries concerning this decision should be directed to JoAnne Burke at (571)272-4584.

This application is being referred to Technology Center AU 1796 for appropriate action by the Examiner in the normal course of business on the reply received

Ramesh Krishnamurthy
Petitions Examiner
Office of Petitions

UNITED STATES PATENT AND TRADEMARK OFFICE

COMMISSIONER FOR PATENTS
UNITED STATES PATENT AND TRADEMARK OFFICE
P.O. BOX 1450
ALEXANDRIA, VA 22313-1450
WWW.USPTO.GOV

Paper No. None

COPY MAILED

APR 18 2005

OFFICE OF PETITIONS

MICHAEL BEST & FRIEDRICH LLC
401 NORTH MICHIGAN AVENUE
SUITE 1900
CHICAGO IL 60611-4212

In re Application of :
Robert Truthan et al. :
Application No. 10/739,662 : DECISION ON PETITION
Filed: December 18, 2003 :
Attorney Docket No.: :
066754-9146 :
Title: GLASS-MOUNTED COUPLER AND :
PASSIVE GLASS-MOUNTED ANTENNA FOR :
SATELLITE RADIO APPLICATIONS :

This is a decision on the petition filed December 16, 2004, requesting that the above-identified application, including page 22 of the specification, be accorded a filing date of December 18, 2003 as part of the original disclosure.

The application was deposited on December 18, 2003. However, on October 26, 2004, the Office of Initial Patent Examination (OIPE) mailed a "Notice of Omitted Item(s) in a Nonprovisional Application" (notice), stating that the application had been accorded a filing date, and advising applicants that page 22 of the specification appeared to have been omitted. The notice set a two-month period of reply.

In response, on December 16, 2004, applicants filed the present petition. The petition is further accompanied by a copy of page 22 of the specification, along with a copy of applicants' postcard receipt acknowledging receipt of "Spec 22 Pages" in the United States Patent and Trademark Office (Office) on December 18, 2003. Applicants request that page 22 of the specification be accorded a filing date of December 18, 2003.

It is noted that 22 pages of specification have been located in the electronic file, including page 22.

The above-mentioned page has been located among the application papers. Therefore, the application, including page 22 of the

specification, was complete on filing and entitled to a filing date of December 18, 2003 as part of the original disclosure.

Accordingly, the petition is **GRANTED**.

The notice mailed October 26, 2004 was sent in error, and is hereby **VACATED**. Therefore, no petition fee is necessary, and the petition fee has not been charged to Petitioner's Deposit Account.

The application file is being returned to OIPE for further processing with a filing date of December 18, 2003, using the original application papers filed on that date, as well as page 22 of the specification submitted on filing, and for noting in Office records that this sheet was present on filing.

It is noted that the address listed on the petition differs from the address of record. The application file does not indicate a change of correspondence address has been filed in this case, although the address given on the petition differs from the address of record. If petitioner desires to receive future correspondence regarding this application, the change of correspondence address must be submitted. A courtesy copy of this decision will be mailed to petitioner. However, all future correspondence will be directed to the address of record until such time as appropriate instructions are received to the contrary. Petitioner will not receive future correspondence unless a Change of Correspondence Address Form (PTO/SB/122) is submitted for the above-identified application. A blank Change of Correspondence Address Form (PTO/SB/122) may be found at http://www.uspto.gov/web/forms/sb0122.pdf.

The general phone number for the Office of Petitions which should be used for status requests is (571) 272-3282. Telephone inquiries regarding this decision should be directed to the undersigned at (571) 272-3225.

Paul Shanoski
Senior Attorney
Office of Petitions
United States Patent and Trademark Office

cc: Gardner Carton and Douglas LLP
191 N. Wacker Drive, Suite 3700
Chicago, IL 60606-1698

UNITED STATES PATENT AND TRADEMARK OFFICE

Commissioner for Patents
United States Patent and Trademark Office
P.O. Box 1450
Alexandria, VA 22313-1450
www.uspto.gov

JACK LO
617 VIEWRIDGE DRIVE
PACIFICA, CA 94044

COPY MAILED

DEC 14 2006

OFFICE OF PETITIONS

In re Application of :
Michael Hall et al :
Application No. 10/739,663 : DECISION GRANTING PETITION
Filed: December 18, 2003 : UNDER 37 CFR 1.137(b)
For: ULTRASONIC TOY FOR ANIMALS :

This is a decision on the petition under 37 CFR 1.137(b), filed June 13, 2006, to revive the above-identified application.

The petition is **GRANTED**.

The above-identified application became abandoned for failure to reply in a timely manner to the non-final Office action mailed September 1, 2005, which set a shortened statutory period for reply of three (3) months. No extensions of time under the provisions of 37 CFR 1.136(a) were obtained. Accordingly, the above-identified application became abandoned on December 2, 2005. A Notice of Abandonment was mailed on March 27, 2006.

The petition satisfies the conditions for revival pursuant to the provisions of 37 CFR 1.137(b) in that (1) a reply, (2) the $750 small entity petition fee, and (3) the required statement of unintentional delay have been received. Accordingly, the reply to the non-final Office action of September 1, 2005 is accepted as having been unintentionally delayed.

It is not apparent whether the person signing the statement of unintentional delay was in a position to have firsthand or direct knowledge of the facts and circumstances of the delay at issue. Nevertheless, such statement is being treated as having been made as the result of a reasonable inquiry into the facts and circumstances of such delay. See 37 CFR 10.18(b) and Changes to Patent Practice and Procedure; Final Rule Notice, 62 Fed. Reg. 53131, 53178 (October 10, 1997), 1203 Off. Gaz. Pat. Office 63, 103 (October 21, 1997). In the event that such an inquiry has not been made, petitioner must make such an inquiry. If such inquiry results in the discovery that the delay was intentional, petitioner must notify the Office.

The power of attorney submitted with the petition is unacceptable and will not be entered since it was not signed by all the applicants. If petitioner herein desires to receive future correspondence regarding this application, an appropriate power of attorney must be submitted. A courtesy copy of this decision is being mailed to petitioner herein. However, until such time as an acceptable power of attorney is received, all future correspondence will be mailed to the above-noted address of record.

Telephone inquiries concerning this decision should be directed to the undersigned at (571) 272-3218.

This matter is being referred to Technology Center AU 3711 for appropriate action in the normal course of business on the reply received June 13, 2006.

Frances Hicks
Petitions Examiner
Office of Petitions

cc:

Charles L. Thoeming
1390 Willow Pass Road, Suite 1020
Concord, CA 94520

UNITED STATES PATENT AND TRADEMARK OFFICE

Commissioner for Patents
United States Patent and Trademark Office
P.O. Box 1450
Alexandria, VA 22313-1450
www.uspto.gov

FEB
MAR 2 3 2006

022006

M. Robert Kestenbaum
11011 Bermuda Dunes NE
Albuquerque, NM 87111

In re Application of:
Helmut Fischer et al.
Application No.: 10/739,673
Filed: December 17, 2003
For: APPARATUS FOR MEASUREMENT OF THE THICKNESS OF THIN LAYERS

DECISION ACCEPTING PAPERS

This is a decision on the petition under 37 CFR § 1.181, filed December 7, 2005, requesting withdrawal of the holding of abandonment and accept the papers attached thereto. The petition is being treated as a petition to accept the reply filed therewith as having been timely filed.

The petition is GRANTED.

A non-final Office action was mailed on April 14, 2005, setting a three-month shortened statutory period for reply. In the absence of a reply, the examiner contacted petitioner to ascertain whether a reply was in fact not filed.

Petitioner asserts that a reply was in fact timely filed on July 11, 2005, via facsimile transmission. To support this assertion, petitioner has submitted a copy of the originals submission, a copy of the report from the sending unit, and a copy of the Auto-Reply Facsimile Transmission from the USPTO acknowledging receipt of a 7-page transmission on July 11, 2005. The of the reply to the Office action of April 14, 2005 includes a certificate of transmission under 37 CFR 1.8(a) bearing a transmission date of July 11, 2005.

The reply filed July 11, 2005 could not be located. However, under the provisions of 37 CFR 1.8(b), it is hereby accepted that a reply was timely filed on July 11, 2005, and the copy of the reply filed with the petition is accepted since the USPTO has apparently misplaced the reply originally submitted.

The reply filed with the petition on December 7, 2005 will be entered in the file record and an Office action will be issued in due course.

Any inquiry regarding this decision should be directed to the undersigned at (571) 272-1606.

Any inquiry regarding the examination of the instant application should be directed to the examiner of record and/or her supervisor.

Hien H. Phan, Special Programs Examiner
Technology Center 2800
Semiconductors, Electrical and Optical
Systems and Components

UNITED STATES PATENT AND TRADEMARK OFFICE

COMMISSIONER FOR PATENTS
UNITED STATES PATENT AND TRADEMARK OFFICE
P.O. BOX 1450
ALEXANDRIA, VA 22313-1450
www.uspto.gov

FSI
C/O LALLY & LALLY, L.L.P.
P.O. BOX 684749
AUSTIN, TX 78768-4749

COPY MAILED

JAN 31 2006

OFFICE OF PETITIONS

In re Application of	:	
William J. Taylor Jr. et. al.	:	
Application No. 10/739,684	:	ON PETITION
Filed: December 18, 2003	:	
Attorney Docket No. SC12565TP	:	

This is a decision on the petition under 37 CFR 1.137(b), filed by facsimile transmission on December 21 2005, to revive the above-identified application.

This application became abandoned for failure to timely respond to the final Office action mailed April 6, 2005.

The petition satisfies the requirements of 37 CFR 1.137(b) in that petitioner has supplied (1) the reply in the form of a Request for Continued Examination (RCE) under 37 CFR 1.114, with the $790 filing fee; (2) the petition fee of $1,500; and (3) an adequate statement of unintentional delay. Therefore, the petition is **GRANTED**.

This application is being revived for consideration of the RCE.

The application file is being referred to Technology Center Art Unit 2823.

Telephone inquiries concerning this decision should be directed to the undersigned at (571) 272-3226.

Andrea Smith
Petitions Examiner
Office of Petitions

United States
Patent And
Trademark Office

P.O. Box 1450, Alexandria, Virginia 22313-1450 – www.uspto.gov

PETITION DECISION

09/08/04

Blakely, Sokoloff, Taylor & Zafman LLP
12400 Wilshire Blvd.
Seventh Floor
Los Angeles, CA 90025-1030

Dear Applicant:

The Box PG Pub replacement drawings for application number 10/739686 received on 05/25/04 by the U. S. Patent and Trademark Office will be included for patent publication.

Telephone inquiries should be directed to Kaletus King, Office of Pre-Grant Publication 703 605-4283.

Kaletus King

Signature of Reviewer, Office of Pre-Grant Publication

United States
Patent And
Trademark Office

P.O. Box 1450, Alexandria, Virginia 22313-1450 – www.uspto.gov

PETITION DECISION

06/18/04

Blakely, Sokoloff, Taylor & Zafman LLP
12400 Wilshire Blvd
Seventh Floor
Los Angeles, CA 90025-1030

Dear Applicant:

The Box PG Pub replacement drawings for application number 10/739689 received on 05/27/04 by the U. S. Patent and Trademark Office will be included for patent publication.

Telephone inquiries should be directed to Kaletus King, Office of Pre-Grant Publication 703 605-4283.

Kaletus King

Signature of Reviewer, Office of Pre-Grant Publication

UNITED STATES PATENT AND TRADEMARK OFFICE

Commissioner for Patents
United States Patent and Trademark Office
P.O. Box 1450
Alexandria, VA 22313-1450
www.uspto.gov

COPY MAILED

OCT 09 2007

OFFICE OF PETITIONS

LAW OFFICE OF JOHN LIGON
213 E. HIGHLAND AVENUE
P.O. BOX 281
ATLANTIC HIGHLANDS, NJ 07716

In re Application of McPartland :
Application No. 10/739,701 : Decision on Petition
Filing Date: December 18, 2001 :
Attorney Docket No. McPartland 29 :

This is a decision on the petition under 37 CFR 1.137(b), filed May 24, 2007, to revive the above-identified application.

The petition is **granted**.

The above-identified application became abandoned for failure to submit the issue fee and publication fee in a timely manner in reply to the Notice of Allowance mailed October 17, 2006, which set a statutory period for reply of three (3) months. Accordingly, the above-identified application became abandoned on January 18, 2007. A Notice of Abandonment was mailed February 21, 2007.

Petitioner has met the requirements to revive the above-identified application pursuant to 37 CFR 1.137(b). Petitioner has submitted the required petition fee of $1,500. Petitioner has submitted the issue fee, the publication fee, and a copy of the issue fee transmittal form. Petitioner has stated the entire delay in filing the required reply from the due date for the reply until the filing of a grantable petition pursuant to 37 CFR 1.137(b) was unintentional.

For the reasons above, the petition is granted and the application is revived.

The Office of Publications will be informed of the instant decision and the application will be issued as a patent in due course.

Telephone inquiries regarding this communication should be directed to Petitions Attorney Steven Brantley at (571) 272-3203.

Charles Steven Brantley
Senior Petitions Attorney
Office of Petitions

UNITED STATES PATENT AND TRADEMARK OFFICE

Commissioner for Patents
United States Patent and Trademark Office
P.O. Box 1450
Alexandria, VA 22313-1450
www.uspto.gov

DONALD F. HAAS
SHELL OIL COMPANY
LEGAL - INTELLECTUAL PROPERTY
P.O. BOX 2463
HOUSTON TX 77252-2463

COPY MAILED
MAY 10 2005
OFFICE OF PETITIONS

In re Application of :
Eric Johannes Maria De Boer et al. :
Application No. 10/739,715 : DECISION ON PETITION
Filed: December 18, 2003 : UNDER 37 CFR 1.78(a)(3)
Attorney Docket No. TS101102(US) :

This is a decision on the petition under 37 CFR 1.78(a)(3), filed October 22, 2004, to accept an unintentionally delayed claim under 35 U.S.C. § 120 for the benefit of priority to the prior-filed nonprovisional applications set forth in the amendment filed concurrently with the instant petition.

The petition is **DISMISSED AS MOOT**.

A petition for acceptance of a claim for late priority under 37 CFR 1.78(a)(3) is only applicable to those applications filed on or after November 29, 2000.

Along with the instant petition under 37 CFR §§ 1.78(a)(3), petitioner has submitted an amendment to the first sentence of the specification following the title to include a reference to the prior-filed nonprovisional application.

The instant pending nonprovisional application was filed on December 18, 2003, and was pending at the time of the filing of the instant petition. While a reference to the prior-filed nonprovisional application was not included in an ADS or in the first sentence of the specification following the title, reference nevertheless was made in the transmittal letter and the declaration filed with the above identified application.

The current procedure where a claim for priority under 37 CFR §§ 1.78(a)(3) is not included in the first sentence of the specification or in an ADS but does appear either in the oath or declaration or a transmittal letter filed with the application and the Office notes the claim for priority, no petition will be required to accept a late claim for priority. This is because the application would have been scheduled for publication on the basis of the information concerning the claim submitted elsewhere in the application with the time period set forth in 37 CFR §§ 1.78(a)(2)(ii). However, on the other hand, if the USPTO does not note the claim for priority to the prior-filed application(s) set forth in

the oath or declaration or transmittal letter submitted with the application, a petition will be required to accept a late claim for priority under 37 CFR §§ 1.78(a)(3).[1] In the instant case, the Office noted the claim for priority of the prior-filed nonprovisional application in the transmittal letter filed with the application, as shown by its inclusion on the filing receipt.

In vew of the above, the $130.00 petition fee submitted is unnecessary and will be refunded to petitioner's deposit account in due course.

Any questions concerning this decision on petition may be directed to Senior Petitions Attorney Patricia Faison-Ball at (571) 272-3212. All other inquiries concerning either the examination procedures or status of the application should be directed the Technology Center.

This matter is being referred to Technology Center Art Unit 1713 for appropriate processing of the amendment filed October 22, 2004.

Frances Hicks
Petitions Examiner
Office of Petitions
Office of the Deputy Commissioner
for Patent Examination Policy

[1] *Note* MPEP 201.11 (V), page 200-75 (Rev. 1. Feb. 2004 and 66 Federal Register 67087 at 67089 (Dec. 28, 2001), effective December 28, 2001.

SPE RESPONSE FOR CERTIFICATE OF CORRECTION

Paper No.:20080314

DATE : March 14, 2008

TO SPE OF : ART UNIT 1626

SUBJECT : Request for Certificate of Correction on Patent No.: 6,849,636

A response is requested with respect to the accompanying request for a certificate of correction.

Please complete this form and return with file, within **7** days to:
Certificates of Correction Branch - ST (South Tower) 9A22
Palm location **7590** - Tel. No. (703) 305-8309

With respect to the change(s) requested, correcting Office and/or Applicant's errors, should the patent read as shown in the certificate of correction? No new matter should be introduced, nor should the scope or meaning of the claims be changed.

Thank You For Your Assistance **Certificates of Correction Branch**

The request for issuing the above-identified correction(s) is hereby:

Note your decision on the appropriated box.

☐ **Approved** All changes apply.

☐ **Approved in Part** Specify below which changes **do not** apply.

☒ **Denied** State the reasons for denial below.

Comments:

The Certificate of Correction does not properly identify the lines of the patent from which the subject matter is to be deleted. For example, in claim 35, "(16) neurodegenerative disease" appears in column 138, line 2. The Certificate of Correction improperly refers to the sections of the amendment rather than the sections of the issued patent.

SPE: /Joseph McKane/ Art Unit 1626

SPE RESPONSE FOR CERTIFICATE OF CORRECTION

DATE : 6/9/08

Paper No.: —

TO SPE OF : ART UNIT 1626

SUBJECT : Request for Certificate of Correction for Appl. No.: 10/239716 Patent No: 6849636 B2

A response is requested with respect to a request for a certificate of correction.

With respect to the change(s) requested to correct Office and/or Applicant's errors, should the patent read as shown in the certificate of correction attached herewith or the COCIN document(s), in IFW images for the above-identified patented application? No new matter should be introduced, nor should the scope or meaning of the claims be changed.

If the response is for an IFW, within 7 days, please complete and forward the response, to the employee (named below) via scanning into application images, using document code **COCX**.

If the response is for a paper file wrapper, please complete the response and forward the response with the paper file wrapper, to the employee (named below), within 7 days, to:

Certificates of Correction Branch (CofC)
South Tower - 9A22
Palm Location 7580

VIRGINIA TOLBERT
Certificates of Correction Branch
703-308-9390 ext. 113

Thank You For Your Assistance

The request for issuing the above-identified correction(s) is hereby:
Note your decision on the appropriate box.

- ☑ **Approved** — All changes apply.
- ☐ **Approved In Part** — Specify below which changes **do not** apply.
- ☐ **Denied** — State the reasons for denial below.

Comments: _____

JOSEPH K. McKANE
SUPERVISORY PATENT EXAMINER
TECHNOLOGY CENTER 1600

SPE

1626
Art Unit

UNITED STATES PATENT AND TRADEMARK OFFICE

Commissioner for Patents
United States Patent and Trademark Office
P.O. Box 1450
Alexandria, VA 22313-1450
www.uspto.gov

ACLARA BIOSCIENCES, INC.
1288 PEAR AVENUE
MOUNTAIN VIEW, CA 94043

COPY MAILED

MAY 19 2004

OFFICE OF PETITIONS

In re Application of
Torleif O. Bjornson et al
Application No. 10/739,720
Filed: December 18, 2003
Attorney Docket No. 108.00US

: DECISION ON PETITION
: UNDER 37 CFR 1.78(a)(3) AND
: UNDER 37 CFR 1.78(a)(6)

This is a decision on the petition under 37 CFR 1.78(a)(3), filed May 12, 2004, to accept an unintentionally delayed claim under 35 U.S.C. §§120 and 365(c) for the benefit of the prior-filed PCT application, and on the petition under 37 CFR 1.78(a)(6) for the claim under 35 U.S.C. §119(e) for the benefit of priority to the prior-filed provisional application set forth in the amendment submitted with the instant petition.

The petition is **Granted**.

A petition for acceptance of a claim for late priority under 37 CFR 1.78(a)(3) is only applicable to those applications filed on or after November 29, 2000. Further, the petition is appropriate only after the expiration of the period specified in 37 CFR 1.78(a)(2)(ii). In addition, the petition under 37 CFR 1.78(a)(3) must be accompanied by:

> **(1)** the reference required by 35 U.S.C. § 120 and 37 CFR 1.78(a)(2)(i) of the prior-filed application, unless previously submitted;[1]
> **(2)** the surcharge set forth in § 1.17(t); and
>
> **(3)** a statement that the entire delay between the date the claim was due under 37 CFR 1.78(a)(2)(ii) and the date the claim was filed was unintentional. The Commissioner may require additional information where there is a question whether the delay was unintentional.

[1] Any nonprovisional application or international application designating the United States of America claiming the benefit of one or more prior-filed copending applications or international applications designating the United States of America must contain or be amended to contain a reference (amendment to the first line of the specification following the title or in an application data sheet (ADS)) to each such prior-filed application, identifying it by application number (consisting of the series code and serial number) or international application number and international filing date filing date and indicating the relationship of the applications. Cross references to other related applications may be made when appropriate (*see* § 1.14).

The instant application was filed on December 18, 2003 and was pending at the time of filing of the instant petition. A reference to the prior-filed application has been included in an amendment to the first sentence of the specification following the title, as required by 37 CFR 1.78(a)(3).

As to the benefit claim under 37 CFR 1.78(a)(6):

A petition under 37 CFR 1.78(a)(6) is only applicable to those applications filed on or after November 29, 2000. Further, the petition is appropriate only after expiration of the period specified in 37 CFR 1.78(a)(5)(ii) and must be filed during the pendency of the nonprovisional application. In addition, the petition must be accompanied by:

(1) the surcharge set forth in 37 CFR 1.17(t);

(2) a statement that the entire delay between the date the claim was due under 37 CFR 1.78(a)(5)(ii) and the date the claim was filed was unintentional; and

(3) the reference to the prior filed provisional application supplied in an application data sheet (ADS)37 CFR 1.76) or as an amendment in the first sentence of the specification following the title. See 35 U.S.C. §119(e) and 37 CFR 1.78(a)(5)(i). The Commissioner may require additional information where there is a question whether the delay was unintentional.

The instant pending nonprovisional application was filed on December 18, 2003, within twelve months of provisional Application No. 60/60/305,122, which was filed on July 12, 2001, for which priority is claimed. A reference to the prior- filed application has been included in an amendment to the first sentence of the specification following the title.

The instant nonprovisional application was filed after November 29, 2000, and the claim for priority herein is submitted after expiration of the period specified in 37 CFR 1.78(a)(2)(ii) and 1.78(a)(5)(ii). Also, the reference to the prior-filed applications was submitted during the pendency of the nonprovisional application for which the benefit is sought. See 35 U.S.C. §§ 120 and 365(c) and § 119(e). Accordingly, having found that the instant petition satisfies the conditions of 37 CFR 1.78(a)(3) and 37 CFR 1.78(a)(6) for acceptance of an unintentionally delayed claim for priority under 35 U.S.C. §§ 120 and 365(c) and § 119(e), the petition to accept an unintentionally delayed claim of benefit to the prior-filed applications is granted.

The granting of the petition to accept the delayed benefit claim to the prior-filed applications under 37 CFR 1.78(a)(3) and 37 CFR 1.78(a)(6) should <u>not</u> be construed as meaning that the instant application is entitled to the benefit of the filing date of the prior-filed applications. In order for the instant application to be entitled to the benefit of the prior-filed applications, all other requirements under 35 U.S.C. §120 and 1.78(a)(1) and (a)(2) and under 35 U.S.C. §119(e) and 37 CFR 1.78(a)(4) and (a)(5) must be met. Similarly, the fact that the corrected Filing Receipt accompanying this decision on petition includes the prior-filed aplications should <u>not</u> be construed as meaning that applicant is entitled to the claim for benefit of priority to the prior-filed applications noted thereon. Accordingly, the examiner will, in due course, consider this benefit claim and determine whether th instant application is entitl d to the ben fit of th arli r filing date.

A corrected Filing Receipt, which includes the priority claim to the prior-filed applications accompanies this decision on petition.

Any questions concerning this matter may be directed to Karen Creasy at (703) 305-8859.

The examienr of Technology Center Art Unit 2877 will consider the claim under 35 U.S.C. § §120 and 365(c) and 37 CFR 1.78(a)(2) for the benefit of prior-filed PCT application, Application No. PCT/US02/19494, filed June 19, 2002, and consider the claim under 35 U.S.C. §119(e) and 37 CFR 1.78(a)(5) for the benefit of prior-filed provisional Application No. 60/305,122, filed July 12, 2001.

Karen Creasy

Karen Creasy
Petitions Examiner
Office of Petitions
Office of the Deputy Commissioner
for Patent Examination Policy

ATTACHMENT : Corrected Filing Receipt

UNITED STATES PATENT AND TRADEMARK OFFICE

Commissioner for Patents
United States Patent and Trademark Office
P.O. Box 1450
Alexandria, VA 22313-1450
www.uspto.gov

ACLARA BIOSCIENCES, INC.
1288 PEAR AVENUE
MOUNTAIN VIEW, CA 94043

COPY MAILED

SEP 0 9 2004

OFFICE OF PETITIONS

In re Application of
Polosky, Quentin F.
Application No. 10/739,721
Filed: December 18, 2003
Attorney Docket No. 107.00US

: DECISION GRANTING PETITION
: UNDER 37 CFR 1.78(a)(3) AND
: UNDER 37 CFR 1.78(a)(6)

This is a decision on the petitions under 37 CFR §§ 1.78(a)(3) and 1.78(a)(6), filed May 7, 2004, to accept an unintentionally delayed claim under 35 U.S.C. §§120 and 119(e) for the benefit of the prior-filed applications set forth in the concurrently filed amendment.

The petitions are **GRANTED**.

A petition for acceptance of a claim for late priority under 37 CFR §§ 1.78(a)(3) and 1.78(a)(6) is only applicable to those applications filed on or after November 29, 2000. Further, the petition is appropriate only after the expiration of the period specified in 37 CFR §§ 1.78(a)(2)(ii) and 1.78(a)(5)(ii). In addition, the petition under 37 CFR §§ 1.78(a)(3) and 1.78(a)(6) must be accompanied by:

(1) the reference required by 35 U.S.C. §§ 120 and 119(e) and 37 CFR §§ 1.78(a)(2)(i) and 1.78(a)(5)(i) of the prior-filed application, unless previously submitted;
(2) the surcharge set forth in § 1.17(t); and
(3) a statement that the entire delay between the date the claim was due under 37 CFR §§ 1.78(a)(2)(ii) and 1.78(a)(5)(ii) and the date the claim was filed was unintentional. The Commissioner may require additional where there is a question whether the delay was unintentional.

The instant application was filed on December 18, 2003 and was pending at the time of filing of the instant petition. A reference to the prior-filed applications has been included in an amendment to the first sentence of the specification following the title, as required by 37 CFR §§ 1.78(a)(2)(iii) and 1.78(a)(5)(iii).

Additionally, the intermediate PCT application was filed within twelve months of provisional Application No. 60/304,464, which was filed on July 10, 2001, for which priority is claimed. A reference to the prior-filed applications has been included in an amendment to the first sentence of the specification following the title.

The instant nonprovisional application was filed after November 29, 2000, and the claim for priority herein is submitted after expiration of the period specified in 37 CFR §§ 1.78(a)(2)(ii) and

1.78(a)(5)(ii). *See* 35 U.S.C. §§ 120 and 365(c) and § 119(e). Accordingly, having found that the instant petition satisfies the conditions of 37 CFR §§ 1.78(a)(3) and 1.78(a)(6) for acceptance of an unintentionally delayed claim for priority under 35 U.S.C. §§ 120 and 365(c) and § 119(e), the petition to accept an unintentionally delayed claim of benefit to the prior-filed applications is granted.

The granting of the petition to accept the delayed benefit claim to the prior-filed applications under 37 CFR §§ 1.78(a)(3) and 1.78(a)(6) should not be construed as meaning that the instant application is entitled to the benefit of the filing date of the prior-filed applications. In order for the instant application to be entitled to the benefit of the prior-filed applications, all other requirements under 35 U.S.C. §120 and 1.78(a)(1) and (a)(2) and under 35 U.S.C. §119(e) and 37 CFR 1.78(a)(4) and (a)(5) must be met. Similarly, the fact that the corrected Filing Receipt accompanying this decision on petition includes the prior-filed applications should not be construed as meaning that applicant is entitled to the claim for benefit of priority to the prior-filed applications noted thereon. Accordingly, the examiner will, in due course, consider this benefit claim and determine whether the instant application is entitled to the benefit of the earlier filing date.

A corrected Filing Receipt, which includes the priority claim to the prior-filed applications, accompanies this decision on petition.

Any questions concerning this matter may be directed to Paralegal Liana Chase at (703) 306-0482 or at (571) 272-3206 after September 28, 2004.

This application is being forwarded to Technology Center Art Unit 1732 for appropriate action on the amendment submitted May 7, 2004, including consideration by the examiner of the claim under 35 U.S.C. § §120 and 37 CFR 1.78(a)(2) for the benefit of the prior-filed PCT application, and for consideration of the claim under 35 U.S.C. §119(e) and 37 CFR 1.78(a)(5) for the benefit of the prior-filed provisional application.

Frances Hicks
Petitions Office
Office of Petitions
Office of the Deputy Commissioner
for Patent Examination Policy

ATTACHMENT : Corrected Filing Receipt

UNITED STATES PATENT AND TRADEMARK OFFICE

Commissioner for Patents
United States Patent and Trademark Office
P.O. Box 1450
Alexandria, VA 22313-1450
www.uspto.gov

Siemens Corporation
Intellectual Property Department
170 Wood Avenue South
Iselin NJ 08830

COPY MAILED

AUG 0 8 2006

OFFICE OF PETITIONS

In re Application of :
Fang et al. :
Application No. 10/739,732 : DECISION ON PETITION
Filed: December 18, 2003 :
Attorney Docket No. 2002P20639US01 :

This is a decision on the petition under 37 CFR 1.181, filed June 15, 2006, to withdraw the holding of abandonment.

On September 26, 2005, the Office mailed a Requirement for Restriction/Election, which set a one-month extendable period to respond. In the apparent absence of a timely filed response, the application became abandoned on October 27, 2005. A Notice of Abandonment was mailed on April 18, 2006.

In the present petition, petitioners asserted that they filed a timely response to the Restriction Requirement via facsimile transmission on October 21, 2005. In support of their assertion, petitioners submitted a copy of the response, containing a certificate of facsimile transmission dated October 21, 2005, and signed by Donald B. Paschburg. Additionally, petitioners submitted a copy of the Transmission Report, showing a completed transmission of the response on October 21, 2005, at 9:05 AM.

Pursuant to 37 CFR 1.8:

> (b) In the event that correspondence is considered timely filed by being mailed or transmitted in accordance with paragraph (a) of this section, but not received in the U.S. Patent and Trademark Office after a reasonable amount of time has elapsed from the time of mailing or transmitting of the correspondence, or after the application is held to be abandoned or after the proceeding is dismissed, terminated, or decided with prejudice, the correspondence will be considered timely if the party who forwarded such correspondence:

(1) Informs the Office of the previous mailing or transmission of the correspondence promptly after becoming aware that the Office has no evidence of receipt of the correspondence;

(2) Supplies an additional copy of the previously mailed or transmitted correspondence and certificate; and,

(3) Includes a statement, which attests on a personal knowledge basis or to the satisfaction of the Director to the previous timely mailing or transmission. If the correspondence was sent by facsimile transmission, a copy of the sending unit's report confirming transmission may be used to support this statement.

(c) The Office may require additional evidence to determine if the correspondence was timely filed.

After reviewing the record and the papers submitted on petition, the response is considered timely filed on October 21, 2005. Accordingly, the petition is **granted**. The holding of abandonment is hereby withdrawn. The application will be restored to pending status in view of the fact that a response was timely submitted on October 21, 2005.

This matter is being referred to Technology Center Art Unit 2615.

Telephone inquiries concerning this matter may be directed to the undersigned at (571) 272-3211.

Christina Tartera Donnell

Christina Tartera Donnell
Senior Petitions Attorney
Office of Petitions

UNITED STATES PATENT AND TRADEMARK OFFICE

UNITED STATES DEPARTMENT OF COMMERCE
United States Patent and Trademark Office
Address: COMMISSIONER FOR PATENTS
P.O. Box 1450
Alexandria, Virginia 22313-1450
www.uspto.gov

IBM CORPORATION
ROCHESTER IP LAW DEPT. 917
3605 HIGHWAY 52 NORTH
ROCHESTER, MN 55901-7829

Mail Date: 04/20/2010

Applicant	: Jeffrey Powers Bradford	: DECISION ON REQUEST FOR
Patent Number	: 7617499	: RECALCULATION of PATENT
Issue Date	: 11/10/2009	: TERM ADJUSTMENT IN VIEW
Appliction No	: 10/739,739	: OF WYETH AND NOTICE OF INTENT TO
Filed	: 12/18/2003	: ISSUE CERTIFICATE OF CORRECTION
		:

The Request for Recalculation is **GRANTED** to the extent indicated.

The patent term adjustment has been determined to be **1726** days. The USPTO will *sua sponte* issue a certificate of correction reflecting the amount of PTA days determined by the recalculation.

Prior to the issuance of the certificate of correction, the USPTO will afford patentee an opportunity to be heard and request reconsideration. Accordingly, patentee has **one month or thirty (30) days**, whichever is longer, to file a request for reconsideration of this patent term adjustment calculation. See 35 U.S.C. 154(b)(3)(B)(ii) and 37 CFR 1.322(a)(4). No extensions of time will be granted under 37 CFR 1.136.

Patentee should use document code PET.OP if electronically filing a request for reconsideration of this patent term adjustment calculation. The patentee must also include the information required by 37 CFR 1.705(b)(2) and the fee required by 37 CFR 1.18(e). If patentee does not file a timely request for reconsideration of this patent term adjustment calculation including the information required by 37 CFR 1.705(b)(2) and the fee required by 37 CFR 1.18(e), the USPTO will issue a certificate of correction reflecting the PTA determination noted above.

Patentee should be aware that in order to preserve the right to review in the United States District Court for the District of Columbia of the USPTO patent term adjustment determination, patentee must ensure that he or she also take the steps required under 35 U.S.C. 154(b)(4)(A) in a timely manner. Nothing in the request for recalculation should be construed as providing an alternative time frame for commencing a civil action under 35 U.S.C. 154(b)(4)(A).

Any questions concerning this decision should be directed to the Office of Patent Legal Administration at 571-272-7702.

UNITED STATES PATENT AND TRADEMARK OFFICE

Commissioner for Patents
United States Patent and Trademark Office
P.O. Box 1450
Alexandria, VA 22313-1450
www.uspto.gov

MOORE & VAN ALLEN PLLC
P.O. BOX 13706
Research Triangle Park NC 27709

COPY MAILED

NOV 12 2004

OFFICE OF PETITIONS

In re Application of :
Alan Lesesky and Bobby Ray Weant :
Application No.10/739,744 : DECISION ACCORDING STATUS
Filed: December 18, 2003 : UNDER 37 C.F.R. §1.47(b)
Attorney Docket Number: 029538-00014 :
Title of Invention: METHOD FOR DATA :
COMMUNICATION BETWEEN A VEHICLE AND A
REMOTE TERMINAL

This is in response to the renewed petition for status under 37 C.F.R. §1.47(b), filed October 6, 2004 (certificate of mailing October 4, 2004).

The petition is **GRANTED**.

Applicant has satisfied the requirements of §1.47(b)[1]. Applicant, by declaration of persons with first hand knowledge and documentary evidence, demonstrated that the non-signing inventors have refused to sign the declaration. This declaration has been reviewed and is found in compliance with 1.63 and 1.64. Applicant paid the petition fee and included a statement of the non-signing inventors' last known addresses in the petition. Proprietary interest in the application has been established.

This application is hereby accorded Rule 1.47(b) status.

As provided in Rule 1.47(c), this Office will forward notice of this application's filing to the non-signing inventor at the address given in the petition. Notice of the filing of this application will also be published in the Official Gazette.

The application file is being forwarded to the Office of Initial Patent Examination for processing.

Telephone inquiries regarding this decision should be directed to the undersigned at (571) 272-3215.

Charlema R. Grant
Petitions Attorney
Office of Petitions

[1] A grantable petition under 37 C.F.R. §1.47(b) requires: (1) proof that the non-signing inventor cannot be reached or refuses to sign the oath or declaration; (2) an acceptable oath or declaration; (3) the petition fee; (4) a statement of last known address of the non-signing inventor; (5) proof of proprietary interest; and (6) proof of irreparable damage.

UNITED STATES PATENT AND TRADEMARK OFFICE

Commissioner for Patents
United States Patent and Trademark Office
P.O. Box 1450
Alexandria, VA 22313-1450
www.uspto.gov

Alan C. Lesesky
5518 McCallum Court
Charlotte, North Carolina 28226

COPY MAILED

NOV 12 2004

OFFICE OF PETITIONS

In re Application of
Alan Lesesky and Bobby Ray Weant
Application No.10/739,744
Filed: December 18, 2003
Attorney Docket Number: 029538-00014
Title of Invention: METHOD FOR DATA COMMUNICATION BETWEEN A VEHICLE AND A REMOTE TERMINAL

LETTER

Dear Mr. Lesesky:

You are named as the sole inventor in the above-identified United States patent application filed under the provisions of 35 U.S.C. 118 (United States Code) and 37 CFR 1.47(b). Should a patent be granted on the application you will be designated therein as a co-inventor.

As the named inventor you are entitled to inspect any paper in the file wrapper of the application, order copies of all or any part thereof (at a prepaid cost per 37 CFR 1.19) or make your position of record in the application. Alternatively, you may arrange to do any of the preceding through a registered patent attorney or agent presenting written authorization from you. If you care to join the application, counsel of record (see below) would presumably assist you. Joining in the application would entail the filing of an appropriate oath or declaration by you pursuant to 37 CFR 1.63.

Telephone inquiries regarding this communication should be directed to Petitions Attorney Charlema R. Grant at (571) 272-3215. Requests for information regarding your application should be directed to the File Information Unit at (703) 308-2733. Information regarding how to pay for and order a copy of the application, or a specific paper in the application, should be directed to Certification Division at (703) 308-9726 or 1-800-972-6382 (outside the Washington D.C. area).

Charlema R. Grant
Petitions Attorney
Office of Petitions

MICHAEL G. JOHNSTON

MOORE & VAN ALLEN PLLC
P.O. BOX 13706
Research Triangle Park NC 27709

UNITED STATES PATENT AND TRADEMARK OFFICE

Commissioner for Patents
United States Patent and Trademark Office
P.O. Box 1450
Alexandria, VA 22313-1450
www.uspto.gov

Bobby Ray Weant
2506-J Celanese Road
Rock Hill, South Carolina 29732

COPY MAILED

NOV 12 2004

OFFICE OF PETITIONS

In re Application of
Alan Lesesky and Bobby Ray Weant
Application No.10/739,744
Filed: December 18, 2003
Attorney Docket Number: 029538-00014
Title of Invention: METHOD FOR DATA COMMUNICATION BETWEEN A VEHICLE AND A REMOTE TERMINAL

LETTER

Dear Mr. Weant:

You are named as the sole inventor in the above-identified United States patent application filed under the provisions of 35 U.S.C. 118 (United States Code) and 37 CFR 1.47(b). Should a patent be granted on the application you will be designated therein as a co-inventor.

As the named inventor you are entitled to inspect any paper in the file wrapper of the application, order copies of all or any part thereof (at a prepaid cost per 37 CFR 1.19) or make your position of record in the application. Alternatively, you may arrange to do any of the preceding through a registered patent attorney or agent presenting written authorization from you. If you care to join the application, counsel of record (see below) would presumably assist you. Joining in the application would entail the filing of an appropriate oath or declaration by you pursuant to 37 CFR 1.63.

Telephone inquiries regarding this communication should be directed to Petitions Attorney Charlema R. Grant at (571) 272-3215. Requests for information regarding your application should be directed to the File Information Unit at (703) 308-2733. Information regarding how to pay for and order a copy of the application, or a specific paper in the application, should be directed to Certification Division at (703) 308-9726 or 1-800-972-6382 (outside the Washington D.C. area).

Charlema R. Grant
Petitions Attorney
Office of Petitions

MICHAEL G. JOHNSTON

MOORE & VAN ALLEN PLLC
P.O. BOX 13706
Research Triangle Park NC 27709

UNITED STATES PATENT AND TRADEMARK OFFICE

Commissioner for Patents
United States Patent and Trademark Office
P.O. Box 1450
Alexandria, VA 22313-1450
www.uspto.gov

ROBERT D. FISH
RUTAN & TUCKER LLP
611 ANTON BLVD 14TH FLOOR
COSTA MESA, CA 92626-1931

COPY MAILED
NOV 17 2006
OFFICE OF PETITIONS

In re Patent of :
Bedekar et al. :
Patent No. 6,956,142 :
Issue Date: October 18, 2005 : Decision on Petition
Application No. 10/739,756 :
Filing Date: December 17, 2003 :
Attorney Docket No. 101090.0003US :

This is a decision on the petition under 37 C.F.R. § 1.183, filed January 30, 2006, to waive the rules and accept the correction of the assignee data on the front page of the above-identified patent. The petition is also being treated as a request under 37 CFR 3.81 to accept the correction of the assignee data.

The petition under 37 CFR 1.183 is **dismissed as moot**.

The request under 37 CFR 3.81 is **dismissed**.

Effective June 25, 2004, the practice relating to issuance of a patent to an assignee was modified by requiring that, after payment of an issue fee, a request for a certificate of correction must be filed in order to obtain issuance of the patent to an assignee. Thus, where the assignment data is submitted after payment of the issue fee, the patent document will not include the assignment information. Therefore, as 37 CFR 3.81(b) was modified to provide for issuance of the patent to the assignee, the practice of waiving the rule (37 CFR 3.81(a)) under 37 CFR 1.183 is longer necessary and has been eliminated.

37 CFR 3.81(b), as modified, reads:

> Any request for issuance of an application in the name of the assignee submitted after the date of payment of the issue fee, and any request for a patent to be corrected to state the name of the assignee, must state that the assignment was submitted for recordation as set forth in § 3.11 before issuance of the patent, and must include a request for a certificate of correction under § 1.323 of this chapter (accompanied by the fee set forth in § 1.20(a)) and the processing fee set forth in § 1.17(i) of this chapter.

In other words, the request under 37 CFR 3.81(b) will be granted when:

(1) a request under 37 CFR 3.81 and the fee set forth in 37 CFR 1.17(i) are filed,
(2) the assignment was submitted for recordation prior to issuance of the patent, and
(3) a request for a certificate of correction and the fee set forth in 37 CFR 1.20(a) are submitted.

Petitioner has failed to meet requirement (2) above. Petitioner seeks to add the following assignee to the face of the patent: Council of Scientific and Industrial Research. However, an

assignment to the Council of Scientific and Industrial Research was not recorded until January 24, 2006. The patent issued October 18, 2005. Therefore, an assignment to the assignee was not recorded prior to the issuance of the patent.

The fee for a petition under 37 CFR 1.183 is $400. Petitioner submitted $400 for the petition. However, the petition under 37 CFR 1.183 is dismissed as moot and the petition is being granted under 37 CFR 3.81(b). The fee for a petition under 37 CFR 3.81(b) is $130. Therefore, $270 has been credited to petitioner's deposit account.

Any request for reconsideration must be submitted within TWO (2) MONTHS from the mail date of this decision. No further petition fee is required for the request. Extensions of time under 37 CFR 1.136(a) are NOT permitted. The reconsideration request should include a cover letter entitled "Renewed Petition under 37 CFR 3.81(b)."

Further correspondence with respect to this matter should be addressed as follows:

By mail: Mail Stop Petition
Commissioner for Patents
P.O. Box 1450
Alexandria, VA 22313-1450

By facsimile: (571) 273-8300
Attn: Office of Petitions

By hand: U.S. Patent and Trademark Office
Customer Service Window
Randolph Building
401 Dulany Street
Alexandria, VA 22314

Telephone inquiries regarding this communication should be directed to Petitions Attorney Steven Brantley at (571) 272-3203.

Charles Steven Brantley
Senior Petitions Attorney
Office of Petitions

UNITED STATES PATENT AND TRADEMARK OFFICE

Commissioner for Patents
United States Patent and Trademark Office
P.O. Box 1450
Alexandria, VA 22313-1450
www.uspto.gov
DIW Feb-07

CHAPMAN AND CUTLER
111 WEST MONROE STREET
CHICAGO IL 60603

COPY MAILED

FEB 2 2 2007

OFFICE OF PETITIONS

In re Patent No. 7,048,340 :
Issued: 23 May, 2006 :
Application No. 10/739,774 : ON PETITION
Filed: 18 December, 2003 :
Atty Dckt No. 1715408 :

This is a decision on the paper filed on 28 August, 2006, which is being treated as a request under 37 CFR 3.81(b)[1] to correct the assignee on the front page of the above-identified patent by way of a Certificate of Correction.

The petition is **granted**.

The required processing fee of $130.00 will be charged to counsel's deposit account as authorized in the request.

Telephone inquires concerning this matter may be directed to the undersigned at 571.272.3231. Any questions concerning the issuance of the Certificate of Correction should be directed to the Certificates of Correction Branch at 703.305.8309.

The file is being referred to the Certificates of Correction Branch for issuance of the requested Certificate of Correction.

D Wood

Douglas I. Wood
Senior Petitions Attorney
Office of Petitions

[1] See Official Gazette of 22 June, 2004.

UNITED STATES PATENT AND TRADEMARK OFFICE

Commissioner for Patents
United States Patent and Trademark Office
P.O. Box 1450
Alexandria, VA 22313-1450
www.uspto.gov
DIW Feb-07

CHAPMAN AND CUTLER
111 WEST MONROE STREET
CHICAGO IL 60603

COPY MAILED

FEB 23 2007

OFFICE OF PETITIONS

In re Patent No. 7,048,340	:	
Issued: 23 May, 2006	:	
Application No. 10/739,774	:	ON PETITION
Filed: 18 December, 2003	:	
Atty Dckt No. 1715408	:	

This is a decision on the paper filed on 28 August, 2006, which is being treated as a request under 37 CFR 3.81(b)[1] to correct the assignee on the front page of the above-identified patent by way of a Certificate of Correction.

The petition is **granted**.

Telephone inquires concerning this matter may be directed to the undersigned at 571.272.3231. Any questions concerning the issuance of the Certificate of Correction should be directed to the Certificates of Correction Branch at 703.305.8309.

The file is being referred to the Certificates of Correction Branch for issuance of the requested Certificate of Correction.

Douglas I. Wood
Senior Petitions Attorney
Office of Petitions

[1] See Official Gazette of 22 June, 2004.

OIPE
APR 05 2004
PATENT & TRADEMARK OFFICE
JC12

UNITED STATES PATENT AND TRADEMARK OFFICE

Applicant:	Shah
Serial No.:	10/739,790
Filed:	12/18/2004
Title:	Detection of Clogged Filter in an HVAC System

Commissioner for Patents
P.O. Box 1450
Alexandria, VA 22313-1450

REQUEST FOR CORRECTED FILING RECEIPT

Dear Sir:

With respect to the above-identified patent application, applicant respectfully requests a corrected filing receipt.

In the section entitled FILING OR 371(C) DATE, please correct the filing date to read December 18, 2003.

Favorable consideration is respectfully requested.

Respectfully submitted,

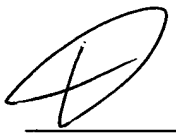

Theodore W. Olds, Reg. No. 33,080
Carlson, Gaskey & Olds
400 W. Maple Road, Ste. 350
Birmingham, MI 48009
(248) 988-8360

Dated: April 2, 2004

CERTIFICATE OF MAIL

I hereby certify that the enclosed Request is being deposited with the United States Postal Service as First Class Mail, postage prepaid, in an envelope addressed to Commissioner for Patents, P.O. Box 1450, Alexandria, VA 22313-1450, on this 2nd day of April, 2004.

Laura Combs

OIPE
APR 0 5 2004
PATENT & TRADEMARK OFFICE
JC#73

UNITED STATES PATENT AND TRADEMARK OFFICE

UNITED STATES DEPARTMENT OF COMMERCE
United States Patent and Trademark Office
Address: COMMISSIONER FOR PATENTS
P.O. Box 1450
Alexandria, Virginia 22313-1450
www.uspto.gov

APPL NO.	FILING OR 371 (c) DATE	ART UNIT	FIL FEE REC'D	ATTY.DOCKET NO	DRAWINGS	TOT CLMS	IND CLMS
10/739,690	12/17/2003 12/18/2003	2125	770	60,246-304; 10,838	1	20	3

CARLSON, GASKEY & OLDS
APR 0 1 2004
RECEIVED

CONFIRMATION NO. 9811

FILING RECEIPT

OC000000012225277

026096
CARLSON, GASKEY & OLDS, P.C.
400 WEST MAPLE ROAD
SUITE 350
BIRMINGHAM, MI 48009

Date Mailed: 03/30/2004

Receipt is acknowledged of this regular Patent Application. It will be considered in its order and you will be notified as to the results of the examination. Be sure to provide the U.S. APPLICATION NUMBER, FILING DATE, NAME OF APPLICANT, and TITLE OF INVENTION when inquiring about this application. Fees transmitted by check or draft are subject to collection. Please verify the accuracy of the data presented on this receipt. **If an error is noted on this Filing Receipt, please write to the Office of Initial Patent Examination's Filing Receipt Corrections, facsimile number 703-746-9195. Please provide a copy of this Filing Receipt with the changes noted thereon. If you received a "Notice to File Missing Parts" for this application, please submit any corrections to this Filing Receipt with your reply to the Notice. When the USPTO processes the reply to the Notice, the USPTO will generate another Filing Receipt incorporating the requested corrections (if appropriate).**

Applicant(s)

Rajendra K. Shah, Indianapolis, IN;

Domestic Priority data as claimed by applicant

Foreign Applications

If Required, Foreign Filing License Granted: 03/30/2004

Projected Publication Date: 06/23/2005

Non-Publication Request: No

Early Publication Request: No

Title

Detection of clogged filter in an HVAC system

Preliminary Class

700

LICENSE FOR FOREIGN FILING UNDER
Title 35, United States Code, Section 184
Title 37, Code of Federal Regulations, 5.11 & 5.15

GRANTED

The applicant has been granted a license under 35 U.S.C. 184, if the phrase "IF REQUIRED, FOREIGN FILING LICENSE GRANTED" followed by a date appears on this form. Such licenses are issued in all applications where the conditions for issuance of a license have been met, regardless of whether or not a license may be required as set forth in 37 CFR 5.15. The scope and limitations of this license are set forth in 37 CFR 5.15(a) unless an earlier license has been issued under 37 CFR 5.15(b). The license is subject to revocation upon written notification. The date indicated is the effective date of the license, unless an earlier license of similar scope has been granted under 37 CFR 5.13 or 5.14.

This license is to be retained by the licensee and may be used at any time on or after the effective date thereof unless it is revoked. This license is automatically transferred to any related applications(s) filed under 37 CFR 1.53(d). This license is not retroactive.

The grant of a license does not in any way lessen the responsibility of a licensee for the security of the subject matter as imposed by any Government contract or the provisions of existing laws relating to espionage and the national security or the export of technical data. Licensees should apprise themselves of current regulations especially with respect to certain countries, of other agencies, particularly the Office of Defense Trade Controls, Department of State (with respect to Arms, Munitions and Implements of War (22 CFR 121-128)); the Office of Export Administration, Department of Commerce (15 CFR 370.10 (j)); the Office of Foreign Assets Control, Department of Treasury (31 CFR Parts 500+) and the Department of Energy.

NOT GRANTED

No license under 35 U.S.C. 184 has been granted at this time, if the phrase "IF REQUIRED, FOREIGN FILING LICENSE GRANTED" DOES NOT appear on this form. Applicant may still petition for a license under 37 CFR 5.12, if a license is desired before the expiration of 6 months from the filing date of the application. If 6 months has lapsed from the filing date of this application and the licensee has not received any indication of a secrecy order under 35 U.S.C. 181, the licensee may foreign file the application pursuant to 37 CFR 5.15(b).

UNITED STATES PATENT AND TRADEMARK OFFICE

COMMISSIONER FOR PATENTS
UNITED STATES PATENT AND TRADEMARK OFFICE
P.O. BOX 1450
ALEXANDRIA, VA 22313-1450
www.uspto.gov

COPY MAILED

SEP 19 2005

OFFICE OF PETITIONS

HARNESS, DICKEY & PIERCE, P.L.C.
P.O. BOX 828
BLOOMFIELD HILLS, MI 48303

In re Application of :
Boyd, et al. : PETITION DECISION
Application No. 10/739,803 : UNDER 37 CFR 1.78(a)(6)
Filed: December 18, 2003 :
Dkt. No.: 2664-000001/US :

This is a decision on the petition under 37 CFR 1.78(a)(6), filed March 18, 2005, to accept an unintentionally delayed claim under 35 U.S.C. §119(e) for the benefit of the prior-filed provisional application set forth in the concurrently filed amendment.

The petition is **GRANTED**.

A petition under 37 CFR 1.78(a)(6) is only applicable to those applications filed on or after November 29, 2000. Further, the petition is appropriate only after expiration of the period specified in 37 CFR 1.78(a)(5)(ii) and must be filed during the pendency of the nonprovisional application. In addition, the petition must be accompanied by:

> **(1)** the reference required by 35 U.S.C. § 119(e) and 37 CFR 1.78(a)(5)(i) to the prior-filed application, unless previously submitted;
> **(2)** the surcharge set forth in § 1.17(t); and
> **(3)** a statement that the entire delay between the date the claim was due under 37 CFR 1.78(a)(5)(ii) and the date the claim was filed was unintentional. The Commissioner may require additional information where there is a question whether the delay was unintentional.

The instant nonprovisional application was filed after November 29, 2000, and the claim herein for the benefit of priority to the prior-filed provisional application is submitted after expiration of the period specified in 37 CFR 1.78(a)(5)(ii). Therefore, this is a proper petition under 37 CFR 1.78(a)(6).

The instant nonprovisional application was pending at the time of filing of the reference to the prior-filed provisional application as required by 37 CFR 1.78(a)(5)(iii). Additionally, the instant nonprovisional application was filed within twelve months of the filing date of the prior-filed provisional application, Application No. 60/530,077, which was filed on December 16, 2003, for which priority is claimed.

The petition complies with the requirements for a grantable petition under 37 CFR 1.78(a)(6) in that (1) a reference to the above-noted, prior-filed provisional application has been included in an amendment to the first sentence of the specification following the title, as provided by 37 CFR 1.78(a)(5)(iii); (2) the surcharge fee required by 37 CFR 1.17(t) has been submitted; and (3) the petition contains a proper statement of unintentional delay. Accordingly, having found that the instant petition for acceptance of an unintentionally delayed claim for the benefit of priority under 35 U.S.C. § 119(e) to the above-noted, prior-filed provisional application satisfies the conditions of 37 CFR 1.78(a)(6), the petition is granted.

The granting of the petition to accept the delayed benefit claim to the prior-filed application under 37 CFR 1.78(a)(6) should not be construed as meaning that the instant application is entitled to the benefit of the filing date of the prior-filed application. In order for the instant application to be entitled to the benefit of the prior-filed application, all other requirements under 35 U.S.C. §119(e) and 37 CFR 1.78(a)(4) and (a)(5) must be met. Similarly, the fact that the corrected Filing Receipt accompanying this decision on petition includes the prior-filed application should not be construed as meaning that applicant is entitled to the claim for benefit of priority to the prior-filed application noted thereon. Accordingly, the examiner will, in due course, consider this benefit claim and determine whether the instant application is entitled to the benefit of the earlier filing date.

A corrected Filing Receipt, which includes the priority claim to the prior-filed provisional application, accompanies this decision on petition.

Application No. 10/739,803

Any inquiries concerning this decision may be directed to Alesia M. Brown at (571) 272-3205. All other inquiries concerning either the examination procedures or status of the application should be directed to the Technology Center.

The application is being forwarded to Technology Center AU 1614 for appropriate action on the amendment submitted March 18, 2005, including consideration by the examiner of the claim under 35 U.S.C. §119(e) for the benefit of priority to prior-filed provisional Application No. 60/530,077.

/Frances Hicks/

Frances Hicks
Lead Petitions Examiner
Office of Petitions
Office of the Deputy Commissioner
for Patent Examination Policy

ATTACHMENT: Corrected Filing Receipt

UNITED STATES PATENT AND TRADEMARK OFFICE

Commissioner for Patents
United States Patent and Trademark Office
P.O. Box 1450
Alexandria, VA 22313-1450
www.uspto.gov

PROPAT, L.L.C.
425-C SOUTH SHARON AMITY ROAD
CHARLOTTE, NC 28211-2841

COPY MAILED

MAR 2 1 2005

OFFICE OF PETITIONS

In re Application of
Peiffer et al.
Application No. 10/739,808
Filed: December 18, 2003
Attorney Docket No. 01/026 MFE C1

Decision on Petition

This is a decision on the petition filed November 26, 2004, to accord the above-identified application a filing date of December 18, 2003.

The petition is **granted**.

On October 12, 2004, the Office of Initial Patent Examination mailed a Notice stating that drawings were not present and that a filing date had not been accorded and the filing date would be the date of receipt of the drawings.

In response, the present petition alleges the drawings are not "necessary for the understanding of the subject matter sought to be patented" within the meaning of 35 USC 113. In the alternative, petitioner alleges the drawings were incorporated by reference.

The necessity for drawings under 35 USC 113

MPEP 601.01(f) states that:

> It has been USPTO practice to treat an application that contains at least one process or method claim as an application for which a drawing is not necessary for an understanding of the invention under 35 U.S.C. 113 (first sentence).

This application contains disclosure directed to a process or method. Therefore, the application should have been treated as an application filed without all of the drawing figures referred to in the specification as discussed in MPEP 601.01(g).

MPEP 601.01(g) states that if an application is filed without all of the drawing figure(s) referred to in the specification, a "Notice of Omitted Item(s)," and not a "Notice of Incomplete Application," is mailed indicating that the application has been accorded a filing date, but is lacking some of the figures of drawings described in the specification.

During examination, if the examiner determines drawings are necessary under 35 USC 113, he may reconsider the filing date issue and have the Office of Initial Patent Examination (OIPE) mail a Notice of Incomplete Application. See MPEP 601.01(f).

In view of the above, the "Notice" mailed October 12, 2004, was mailed in error and is hereby withdrawn.

As of November 1, 2004, the fee for a petition under 37 CFR 1.53 is $400. The $400 fee charged to petitioner's deposit account on November 29, 2004, will be credited back to the deposit account.

The incorporation by reference

Upon receipt of a Notice of Omitted Items, one file an amendment to add the missing material in certain circumstances. A a petition (and fee) are unnecessary.

The Office allows an applicant to rely upon an incorporation by reference of a parent application when a portion of the child application has been inadvertently omitted.

MPEP 201.06(c) states that:

> . . . an applicant may incorporate by reference the prior application . . . . The inclusion of this incorporation by reference of the prior application(s) will permit an applicant to amend the continuing application to include any subject matter in such prior application(s), without the need for a petition provided the continuation or divisional application is entitled to a filing date notwithstanding the incorporation by reference. . . .
>
> If a continuation or divisional application as originally filed is entitled to a filing date despite the omission of a portion of the prior application(s), applicant will be permitted to add the omitted material by way of an amendment provided a statement was included in the application as originally filed that incorporates by reference the prior application(s). If the application as originally filed includes a proper incorporation by reference of the prior application(s), an omitted specification page(s) and/or drawing figure(s) identified in a "Notice of Omitted Item(s)" may be added by amendment provided the omitted item(s) contains only subject matter in common with such prior application(s). In such case, applicant need not respond to the "Notice of Omitted Item(s)."

If an amendment is filed adding missing material, the amendment is considered in due course by the the examiner for entry of new matter not described in the application as filed.

The first sentence of the specification states, "This application is a continuation of US App. No. 10/077,122 filed February 15, 2002, which is hereby incorporated by reference herein."

Petitioner has filed a copy of drawings which appear to be identical to drawings filed in application no. 10/077,122.

The drawings will be treated as a preliminary amendment and will be considered by the examiner in due course.

Steps to be taken by the Office

The Office of Initial Patent Examination will further process the application with a filing date of December 18, 2003, using the application papers filed on December 18, 2003. The drawings submitted on November 26, 2004, will be entered and treated as a preliminary amendment to the application.

Telephone inquiries should be directed to Petitions Attorney Steven Brantley at (571) 272-3203.

Charles Steven Brantley
Senior Petitions Attorney
Office of Petitions

UNITED STATES PATENT AND TRADEMARK OFFICE

Commissioner for Patents
United States Patent and Trademark Office
P.O. Box 1450
Alexandria, VA 22313-1450
www.uspto.gov

SAWYER LAW GROUP LLP
P O BOX 51418
PALO ALTO CA 94303

COPY MAILED

MAR 2 2 2005

OFFICE OF PETITIONS

In re Application of :
Tien, et al. :
Application No. 10/739,815 : ON PETITION
Deposited: December 17, 2003 :
Attorney Docket No. 3027P/22439 :
For: ENDOSCOPIC DEVICE

This is a decision on the petition, filed January 28, 2005 (certificate of mailing date January 24, 2005), requesting, in effect, partial withdrawal of the Notice of Incomplete Nonprovisional Application (Notice), mailed July 28, 2004, insofar as it alleges that the application was deposited without drawings. The petition will be treated under 37 CFR 1.53(e). In addition, this decision will address the petition under 37 CFR 1.47(a), filed January 28, 2005 (certificate of mailing date January 24, 2005).

The petition under 37 CFR 1.53(e) is **DISMISSED**.

The petition under 37 CFR 1.47(a) is **DISMISSED**.

Any further reconsideration must be submitted within TWO (2) MONTHS from the mail date of this decision. Extensions of time under 37 CFR 1.136(a) are permitted.

PETITION UNDER 37 CFR 1.53(e)

The application was deposited on December 17, 2003. On July 28, 2004, the Office of Initial Patent Examination mailed a Notice informing applicants that no filing date had been accorded to the application papers submitted on December 17, 2003 because drawings of applicants' invention were not filed.

In response to the Notice, petitioner filed the present petition. Petitioner requests that the

application be accorded a filing date of December 17, 2003 on the basis that 13 sheets of drawing figures were received in the Patent and Trademark Office (PTO) on December 17, 2003.

Unfortunately, the copy of the postcard receipt is copied very dark and the barcode part is illegible. Petitioner is requested to submit another copy of the postcard receipt.

A $400.00 petition fee will be charged to deposit account no. 02-2120 for filing a petition under 37 CFR 1.53(e). Once a legible postcard receipt is filed and a reconsideration petition is granted, the fee will be refunded to the same deposit account.

PETITION UNDER 37 CFR 1.47(a)

A grantable petition under 37 CFR 1.47(a) requires

(1) a petition including proof of the pertinent facts establishing that the joint inventor(s) refuses to join, or cannot be found or reached after diligent effort,
(2) a proper oath or Declaration executed by the available joint inventor(s),
(3) the fee of $200 as specified in 37 CFR § 1.17(g), and
(4) the last known address of the omitted inventor(s).

This petition lacks item (1), (2), and (4) above.

As to item (1), Applicant has failed to establish that the non-signing inventors, Chih-Ming Dai, Yi-Si Chang, and Hou-Ru Huang, cannot be located. The petition contains a declaration by joint inventor Der-Yang Tien, who states that the three non-signing inventors were his students who have since left the university and that attempts to discover their addresses from the University Students Records Office were not successful.

A showing of **diligence** is critical in obtaining Rule 47 status when an inventor cannot be located or reached.

Petitioner should engage in further efforts to locate the non-signing inventors. Perhaps the university has the non-signing inventors' parents' addresses and following up with the parents would lead to the non-inventors. The following is a list of evidentiary sources that are commonly relied upon to prove inability to locate an inventor: searches of Internet databases; inquiries of local telephone directories; inquiries of any extant national or regional registries; telegrams; and documented inquiries of last known employers. Every listed type of search need not be done. However, a diligent effort to find the inventor must be made.

Documentary evidence that supports a finding that the non-signing inventor could not be found or reached should be made part of any affidavits or declarations that fully describe the exact facts

which are relied on to establish that a diligent effort was made to locate the non-signing inventor. Printed computer records would suffice.

The affidavit or declaration of facts must be signed, where at all possible, by a person having *firsthand knowledge* of the facts recited therein. Statements based on hearsay will not normally be accepted. It is important that the affidavit or declaration contain statements of fact as opposed to conclusions.

As to item (2), an oath or declaration for the patent application in compliance with 37 CFR 1.63 and 1.64 still has not been presented. It is noted that each joint inventor's residence and post office address is identical to the others. Given the fact that the non-signing inventors are no longer university students, it is assumed that they do not receive mail at the same address as the signing joint inventor.

MPEP 605.03 states that, "Applicant's mailing address means that address at which he or she customarily receives his or her mail. Either applicant's home or business address is acceptable as the mailing address.... In situations where an inventor does not execute the oath or declaration and the inventor is not deceased, such as in an application filed under 37 CFR 1.47, the inventor's most recent home address must be given...."

The available inventor must execute a new declaration that lists the residence and most recent home address or mailing address for the non-signing inventors. MPEP 605.03 Hopefully a more diligent search for them will yield accurate contact information to include on the declaration.

As to item (4), the last known addresses of the omitted inventors are missing and required.

Regarding finances, the current petition fee for filing a Rule 47 petition is $200.00. Petitioner submitted only $130.00. Therefore, petitioner's deposit account was charged the balance due, or $70.00 on February 1, 2005.

Further correspondence with respect to this matter should be addressed as follows:

By mail:
Mail Stop PETITION
Commissioner for Patents
Post Office Box 1450
Alexandria, VA 22313-1450

By hand:
U.S. Patent and Trademark Office
Customer Service Window, Mail Stop Petition
Randolph Building
401 Dulany Street
Alexandria, VA 22314

By FAX: (703) 872-9306 – ATTN: Office of Petitions

Telephone inquiries may be directed to the undersigned at (571) 272-3230.

E. Shirene Willis
Senior Petitions Attorney
Office of Petitions

UNITED STATES PATENT AND TRADEMARK OFFICE

Commissioner for Patents
United States Patent and Trademark Office
P.O. Box 1450
Alexandria, VA 22313-1450
www.uspto.gov

SAWYER LAW GROUP LLP
P O BOX 51418
PALO ALTO CA 94303

COPY MAILED

AUG 2 2 2005

OFFICE OF PETITIONS

In re Application of
Tien, et al.
Application No. 10/739,815
Deposited: December 17, 2003
Attorney Docket No. 3027P/22439
For: ENDOSCOPIC DEVICE

ON PETITION

This is a decision on the reconsideration petition under 37 CFR 1.53(e), filed August 8, 2005 (certificate of mailing date August 2, 2005) requesting, in effect, partial withdrawal of the Notice of Incomplete Nonprovisional Application (Notice), mailed July 28, 2004, insofar as it alleges that the application was deposited without drawings. In addition, this decision will address the reconsideration petition under 37 CFR 1.47(a) filed in the same paper.

The petition under 37 CFR 1.53(e) is **GRANTED**.

The petition under 37 CFR 1.47(a) is **DISMISSED**.

Any further reconsideration petition must be submitted within **TWO (2) MONTHS** from the mail date of this decision. Please caption the reconsideration petition "Reconsideration Petition under 37 CFR 1.47(a)." Extensions of time under 37 CFR 1.136(a) are permitted.

Regarding finances, petitioner was given two months to respond to the March 22, 2005 petition decision. Petitioner filed the instant reconsideration petition on August 8, 2005 (certificate of mailing date August 2, 2005). Pursuant to petitioner's authorization, deposit account no. 02-2120 will be charged a three month extension of time, so that the instant reconsideration petition is timely filed.

PETITION UNDER 37 CFR 1.53(e)

The application was deposited on December 17, 2003. On July 28, 2004, the Office of Initial Patent Examination mailed a Notice informing applicants that no filing date had been accorded to the application papers submitted on December 17, 2003 because drawings of applicants' invention were not filed.

Petitioner requests that the application be accorded a filing date of December 17, 2003 on the basis that 13 sheets of drawing figures were received in the Patent and Trademark Office (PTO) on December 17, 2003.

In support, the instant reconsideration petition is accompanied by a legible copy of applicants' itemized postcard receipt showing an Office of Initial Patent Examination generated barcode citing December 17, 2003 as the date of receipt. The postcard lists, *inter alia*, that the filing included 13 sheets of drawings.

The return postcard constitutes *prima facie* evidence that 13 sheets of drawing figures were filed on December 17, 2003. MPEP 503. The petition is **granted**. Pursuant to petitioner's authorization, deposit account no. 02-2120 will be credited the $400.00 petition fee submitted with the initial petition.

PETITION UNDER 37 CFR 1.47(a)

A grantable petition under 37 CFR 1.47(a) requires

(1) a petition including proof of the pertinent facts establishing that the joint inventor(s) refuses to join, or cannot be found or reached after diligent effort,
(2) a proper oath or Declaration executed by the available joint inventor(s),
(3) the fee of $200 as specified in 37 CFR § 1.17(g), and
(4) the last known address of the omitted inventor(s).

This reconsideration petition still lacks item (1), (2), and (4) above.

As to item (1), Applicant has failed to establish that the non-signing inventors, Chih-Ming Dai, Yi-Si Chang, and Hou-Ru Huang, cannot be located. Mr. Tien has not explained the initial efforts made to locate the non-signing inventors. Petitioner has not submitted evidence of additional, subsequent searches made for the non-signing inventors. Petitioner has not shown diligence in attempting to locate the non-signing inventors.

As to item (2), an oath or declaration for the patent application in compliance with 37 CFR 1.63 and 1.64 still has not been presented. The most recent declaration only lists one inventor. However, there are four joint inventors. The inventive entity was set by the filing of the partially executed declaration. It is not possible to change the inventive entity without a petition under 37 CFR 1.48.

If the inventive entity is the original 4 named joint inventors, then petitioner must submit a new declaration for patent application executed by the available joint inventor that lists complete identifying information for all the joint inventors. The available inventor should execute the declaration and the leave the signature blocks of the nonsigning inventors blank.

As to item (4), the last known addresses of the omitted inventors are missing and required.

Further correspondence with respect to this matter should be addressed as follows:

By mail:
Mail Stop PETITION
Commissioner for Patents
Post Office Box 1450
Alexandria, VA 22313-1450

By hand:
U.S. Patent and Trademark Office
Customer Service Window, Mail Stop Petition
Randolph Building
401 Dulany Street
Alexandria, VA 22314

By FAX: (571) 273-8300 - ATTN: Office of Petitions

Telephone inquiries may be directed to the undersigned at (571) 272-3230.

After the mailing of this decision, the application will be returned to the Office of Initial Patent Examination with a filing date of **December 17, 2003**, using the copy of the 13 sheets of drawings submitted on January 28, 2005 (certificate of mailing date January 24, 2005). However, the application is not ready for examination due to unresolved inventorship issues.

E. Shirene Willis
Senior Petitions Attorney
Office of Petitions

UNITED STATES PATENT AND TRADEMARK OFFICE

UNITED STATES DEPARTMENT OF COMMERCE
United States Patent and Trademark Office
Address: COMMISSIONER FOR PATENTS
P.O. Box 1450
Alexandria, Virginia 22313-1450
www.uspto.gov

SCULLY, SCOTT, MURPHY & PRESSER, P.C.
400 GARDEN CITY PLAZA
SUITE 300
GARDEN CITY, NY 11530

Mail Date: 04/20/2010

Applicant	: Hiroshi Maruyama	: DECISION ON REQUEST FOR
Patent Number	: 7610489	: RECALCULATION of PATENT
Issue Date	: 10/27/2009	: TERM ADJUSTMENT IN VIEW
Appliction No	: 10/739,817	: OF WYETH AND NOTICE OF INTENT TO
Filed	: 12/18/2003	: ISSUE CERTIFICATE OF CORRECTION
		:

The Request for Recalculation is **GRANTED** to the extent indicated.

The patent term adjustment has been determined to be **1297** days. The USPTO will *sua sponte* issue a certificate of correction reflecting the amount of PTA days determined by the recalculation.

Prior to the issuance of the certificate of correction, the USPTO will afford patentee an opportunity to be heard and request reconsideration. Accordingly, patentee has **one month or thirty (30) days**, whichever is longer, to file a request for reconsideration of this patent term adjustment calculation. See 35 U.S.C. 154(b)(3)(B)(ii) and 37 CFR 1.322(a)(4). No extensions of time will be granted under 37 CFR 1.136.

Patentee should use document code PET.OP if electronically filing a request for reconsideration of this patent term adjustment calculation. The patentee must also include the information required by 37 CFR 1.705(b)(2) and the fee required by 37 CFR 1.18(e). If patentee does not file a timely request for reconsideration of this patent term adjustment calculation including the information required by 37 CFR 1.705(b)(2) and the fee required by 37 CFR 1.18(e), the USPTO will issue a certificate of correction reflecting the PTA determination noted above.

Patentee should be aware that in order to preserve the right to review in the United States District Court for the District of Columbia of the USPTO patent term adjustment determination, patentee must ensure that he or she also take the steps required under 35 U.S.C. 154(b)(4)(A) in a timely manner. Nothing in the request for recalculation should be construed as providing an alternative time frame for commencing a civil action under 35 U.S.C. 154(b)(4)(A).

Any questions concerning this decision should be directed to the Office of Patent Legal Administration at 571-272-7702.

UNITED STATES PATENT AND TRADEMARK OFFICE

Commissioner for Patents
United States Patent and Trademark Office
P.O. Box 1450
Alexandria, VA 22313-1450
www.uspto.gov

TEXAS INSTRUMENTS INCORPORATED
P O BOX 655474, M/S 3999
DALLAS TX 75265

COPY MAILED

MAR 0 2 2005

OFFICE OF PETITIONS

In re Application of :
Duane Scott Dewald et al. : DECISION DISMISSING
Application No. 10/739,820 : PETITION
Filed: December 18, 2003 :
Attorney Docket No. TI-35268 :

This is a decision on the petition filed January 3, 2005 by facsimile transmission, requesting that the middle initial of the second inventor be included in the official record.[1] The request is treated under 37 CFR 1.182.

A review of Office PALM records indicates that the correction has been made and that a corrected filing receipt was mailed February 14, 2005.

In view of the above, the petition is **GRANTED**.

The second inventor's name has been changed as follows:

Steven M. Penn

This matter is being referred to the Office of Publications.

Telephone inquiries regarding this decision should be directed to the undersigned Petitions Attorney at (571) 272-3212.

Patricia Faison-Ball
Senior Petitions Attorney
Office of Petitions

[1] A second copy of the petition was received in the USPTO by mail on January 18, 2005.

SEP 17 2007
PATENT & TRADEMARK OFFICE

UNITED STATES DEPARTMENT OF COMMERCE
United States Patent and Trademark Office
Address: COMMISSIONER FOR PATENTS
P.O. Box 1450
Alexandria, Virginia 22313-1450
www.uspto.gov

APPLICATION NO.	FILING DATE	FIRST NAMED INVENTOR	ATTORNEY DOCKET NO.	CONFIRMATION NO.
10/739,823	12/17/2003	Andrew Ho	RA316.P.US	1925

38489 7590 06/27/2007

SILICON EDGE LAW GROUP, LLP
6601 KOLL CENTER PARKWAY
SUITE 245
PLEASANTON, CA 94566

EXAMINER	
WILLIAMS, LAWRENCE B	
ART UNIT	PAPER NUMBER
2611	

DATE MAILED: 06/27/2007

Determination of Patent Term Adjustment under 35 U.S.C. 154 (b)
(application filed on or after May 29, 2000)

The Patent Term Adjustment to date is 722 day(s). If the issue fee is paid on the date that is three months after the mailing date of this notice and the patent issues on the Tuesday before the date that is 28 weeks (six and a half months) after the mailing date of this notice, the Patent Term Adjustment will be 722 day(s).

If a Continued Prosecution Application (CPA) was filed in the above-identified application, the filing date that determines Patent Term Adjustment is the filing date of the most recent CPA.

Applicant will be able to obtain more detailed information by accessing the Patent Application Information Retrieval (PAIR) WEB site (http://pair.uspto.gov).

Any questions regarding the Patent Term Extension or Adjustment determination should be directed to the Office of Patent Legal Administration at (571)-272-7702. Questions relating to issue and publication fee payments should be directed to the Customer Service Center of the Office of Patent Publication at 1-(888)-786-0101 or (571)-272-4200.

UNITED STATES PATENT AND TRADEMARK OFFICE

Commissioner for Patents
United States Patent and Trademark Office
P.O. Box 1450
Alexandria, VA 22313-1450
www.uspto.gov

FISH & RICHARDSON PC
225 FRANKLIN STREET
BOSTON, MA 02110-2804

COPY MAILED

APR 0 6 2005

OFFICE OF PETITIONS
ON PETITION

In re Application of :
Richard M. Foley et al :
Application No. 10/739,838 :
Filed: December 18, 2003 :
Attorney Docket No. 00315-387002

This is a decision on the petition, filed April 4, 2005, under 37 CFR 1.313(c)(2) to withdraw the above-identified application from issue after payment of the issue fee.

The petition is **GRANTED**.

The above-identified application is withdrawn from issue for consideration of a submission under 37 CFR 1.114 (request for continued examination). See 37 CFR 1.313(c)(2).

Petitioner is advised that the issue fee paid on March 4, 2005 in the above-identified application cannot be refunded. If, however, the above-identified application is again allowed, petitioner may request that it be applied towards the issue fee required by the new Notice of Allowance.[1]

Telephone inquiries should be directed to Irvin Dingle at (571) 272-3210.

This matter will be forwarded to Technology Center AU 3765 for processing of the request for continued examination under 37 CFR 1.114 and for consideration of the concurrently filed Information Disclosure Statement.

Irvin Dingle
Petitions Examiner
Office of Petitions
Office of the Deputy Commissioner
for Patent Examination Policy

[1] The request to apply the issue fee to the new Notice may be satisfied by completing and returning the new Issue Fee Transmittal Form PTOL-85(b), which includes the following language thereon: Commissioner for Patents is requested to apply the Issue Fee and Publication Fee (if any) or re-apply any previously paid issue fee to the application identified above. Petitioner is advised that, whether a fee is indicated as being due or not, the Issue Fee Transmittal Form **must** be completed and timely submitted to avoid abandonment. Note the language in bold text on the first page of the Notice of Allowance and Fee(s) Due (PTOL-85).

UNITED STATES PATENT AND TRADEMARK OFFICE

Commissioner for Patents
United States Patent and Trademark Office
P.O. Box 1450
Alexandria, VA 22313-1450
www.uspto.gov

ROBERTS MLOTKOWSKI SAFRAN & COLE PC
INTELLECTUAL PROPERTY DEPARTMENT
PO BOX 10064
MCLEAN VA 22102-8064

MAILED

OCT 02 2009

OFFICE OF PETITIONS

In re Patent No. 6,879,276
Issue Date: April 12, 2005
Application No. 10/739,860
Filed: December 18, 2003
Attorney Docket No. 14485.10

DECISION ON PETITION

This is a decision on the petition to reinstate an expired patent under 37 CFR 1.378(c), filed July 21, 2009.

The petition under 37 CFR 1.378(c) is **GRANTED**.

The above-identified patent issued April 12, 2005. Accordingly, the first maintenance fee could have been paid during the period from April 12, 2008 through October 12, 2008 without surcharge, or with a late payment surcharge during the period from October 13, 2008 through April 12, 2009. No maintenance fee having been received, the patent expired on April 13, 2009.

Since the instant petition was filed within twenty-four months after the six-month grace period provided in 37 CFR 1.362(e), the petition was timely filed under the provisions of 37 CFR

1.378(c). The maintenance fee in this case is accepted and the above-identified patent is hereby reinstated as of the mail date of this decision.

Receipt of the $1,640 petition surcharge and the $980 maintenance fee is acknowledged.

The patented file is being returned to Files Repository.

Telephone inquiries specific to this decision may be directed to the undersigned at (571)272-3207.

Cliff Congo
Petitions Attorney
Office of Petitions

UNITED STATES PATENT AND TRADEMARK OFFICE

COMMISSIONER FOR PATENTS
UNITED STATES PATENT AND TRADEMARK OFFICE
P.O. BOX 1450
ALEXANDRIA, VA 22313-1450
www.uspto.gov

LINIAK BERENATO & WHITE
6550 ROCK SPRING DRIVE, SUITE 240
BETHESDA, MD 20817

COPY MAILED

MAY 22 2006

OFFICE OF PETITIONS

In re Application of :
Michael Powers, et al :
Application No. 10/739,862 : DECISION ON REQUEST
Filed: December 18, 2003 : TO WITHDRAW
Attorney Docket No. RUS0133 : FROM RECORD

This is a decision on the Request to Withdraw as attorney or agent of record under 37 C.F.R. § 1.36(b), filed January 5, 2006.

The request is **APPROVED**.

A grantable request to withdraw as attorney/agent of record must be signed by every attorney/agent seeking to withdraw or contain a clear indication that one attorney is signing on behalf of another/others. A request to withdraw will not be approved unless at least 30 (thirty) days would remain between the date of approval and the later of the expiration date of a time to file a response or the expiration date of the maximum time period which can be extended under 37 C.F.R. § 1.136(a).

Thomas P. Liniak has been withdrawn as attorney or agent of record; all other attorneys remain of record.

Telephone inquiries concerning this decision should be directed to Sherry D. Brinkley at (571) 272-3204.

Sherry D. Brinkley
Petitions Examiner
Office of Petitions

Conferee: David Bucci

UNITED STATES PATENT AND TRADEMARK OFFICE

COMMISSIONER FOR PATENTS
UNITED STATES PATENT AND TRADEMARK OFFICE
P.O. BOX 1450
ALEXANDRIA, VA 22313-1450
www.uspto.gov

SEED INTELLECTUAL PROPERTY LAW GROUP PLLC
701 FIFTH AVE
SUITE 5400
SEATTLE WA 98104

MAIL

JUL 26 2007

DIRECTOR'S OFFICE
TECHNOLOGY CENTER 2600

In re Application of :
PETERSON, BRUCE A. :
Serial No.: **10/739,897** :
Filed: December 17, 2003 :
For: **METHOD AND SYSTEM FOR DYNAMIC VISUALIZATION OF MULTI-DIMENSIONAL DATA** :

DECISION ON PETITION
ACCEPTANCE OF COLOR DRAWINGS

This is a decision on the petition under 37 C.F.R. § 1.84(a)(2), filed, January 9, 2007, requesting acceptance of color drawings.

The petition requests that the color drawings identified in figures 1, 4A, 4B, 4C, 4D, 4E, 4F, 4G, 4H, 4I, 4J, 5, and 6, be accepted in lieu of black and white drawings.

A grantable petition under 37 C.F.R. §1.84(a)(2) must be accompanied by a fee set forth under 37 C.F.R. § 1.17(h), 3 (three) set of the color drawings in question, and the specification must contain, or be amended to contain, the following language as the first paragraph in that portion of the specification relating to the brief description of the drawings:

"The file of this patent contains at least one drawing executed in color. Copies of this patent with color drawing(s) will be provided by the Patent and Trademark Office upon request and payment of the necessary fee."

The petition is **GRANTED**.

Krista Zele
Special Program Examiner
Technology Center 2600
Communications

UNITED STATES PATENT AND TRADEMARK OFFICE

COMMISSIONER FOR PATENTS
UNITED STATES PATENT AND TRADEMARK OFFICE
P.O. BOX 1450
ALEXANDRIA, VA 22313-1450
www.uspto.gov

Paul, Hastings, Janofsky & Walker, LLP
875 15th Street, NW
Washington, DC 20005

COPY MAILED

JUL 15 2008

OFFICE OF PETITIONS

In re Application of :
Ran Ezerzer et al. :
Application No. 10/739,916 : DECISION ON PETITION
Filed: December 17, 2003 : TO WITHDRAW
Attorney Docket No. 45175.00002.CON1 : FROM RECORD
:

This is a decision on the Request to Withdraw as attorney or agent under 37 C.F.R. § 1.36(b) or 37 C.F.R. § 10.40 filed June 20, 2008.

The request is **APPROVED**.

A review of the file record indicates that Trevor Q. Coddington and all attorneys/agents associated with customer number 36183: (1) does not have power of attorney in this patent application[1]; and (2) has been employed or otherwise engaged in the proceedings in this patent application. In view of the present decision, all the attorneys associated with customer number 20350 have been withdrawn from the present application and may not prepare or submit papers under 37 C.F.R. § 1.34, or correspond in any manner in this application unless appointed in an acceptable power of attorney under 37 C.F.R. § 1.32(b).

The request to change the correspondence of record is not acceptable as the requested correspondence address is not that of (1) the first named signing inventor; or (2) an intervening assignee of the entire interest under 37 C.F.R. 3.71. Accordingly, all correspondence will be mailed to the first named inventor. A courtesy copy of this decision will be mailed to the address noted on the request to withdraw. If this firm desires to receive future correspondence regarding this application, the proper power of attorney documents must be submitted.

Applicant is reminded that there is no attorney of record at this time.

[1] The power of attorney filed on July 6, 2007 was improperly accepted by the Office. Compliance with 37 CFR 3.73(b) has not been satisfied in that a statement under 37 CFR 3.73(b) was not submitted setting forth a reel and frame number where the recorded assignment appears in the assignment records of the Office or a copy of the assignment document.

Telephone inquires concerning this decision should be directed to Kimberly Inabinet at 571-272-4618.

Kimberly Inabinet
Petitions Examiner
Office of Petitions

cc: Ran Ezerzer
531 Front Street
San Diego, CA 92101

cc: Townsend and Townsend & Crew, LLP
Attn: William Shaffer, Esq.
379 Lytton Avenue
Palo Alto, CA 94301-1431

UNITED STATES PATENT AND TRADEMARK OFFICE

UNITED STATES DEPARTMENT OF COMMERCE
United States Patent and Trademark Office
Address: COMMISSIONER FOR PATENTS
P.O. Box 1450
Alexandria, Virginia 22313-1450
www.uspto.gov

APPLICATION NUMBER	FILING OR 371(C) DATE	FIRST NAMED APPLICANT	ATTY. DOCKET NO./TITLE
10/739,916	12/17/2003	Ran Ezerzer	45175.00002.CON1

CONFIRMATION NO. 8690

POWER OF ATTORNEY NOTICE

36183
PAUL, HASTINGS, JANOFSKY & WALKER LLP
875 15th Street, NW
Washington, DC 20005

Date Mailed: 07/14/2008

NOTICE REGARDING CHANGE OF POWER OF ATTORNEY

This is in response to the Power of Attorney filed 06/20/2008.

- The withdrawal as attorney in this application has been accepted. Future correspondence will be mailed to the new address of record. 37 CFR 1.33.

/kainabinet/

Office of Data Management, Application Assistance Unit (571) 272-4000, or (571) 272-4200, or 1-888-786-0101

UNITED STATES PATENT AND TRADEMARK OFFICE

Commissioner for Patents
United States Patent and Trademark Office
P.O. Box 1450
Alexandria, VA 22313-1450
www.uspto.gov

MAYER & WILLIAMS PC
251 NORTH AVENUE WEST
2ND FLOOR
WESTFIELD NJ 07090

COPY MAILED

AUG 0 1 2007

OFFICE OF PETITIONS

In re Application of :
EVANGELIDES, Stephen et al. :
Application No. 10/739,929 : DECISION ON PETITION
Filed: January 18, 2003 : TO WITHDRAW
Attorney Docket No. **9005/47** : FROM RECORD
:

This is a decision on the Request to Withdraw as attorney or agent of record under 37 C.F.R. § 1.36(b), filed June 18, 2007.

The request is **NOT APPROVED**.

A grantable request to withdraw as attorney/agent of record must be signed by every attorney/agent seeking to withdraw or contain a clear indication that one attorney is signing on behalf of another/others. A request to withdraw will not be approved unless at least 30 (thirty) days would remain between the date of approval and the later of the expiration date of a time to file a response or the expiration date of the maximum time period which can be extended under 37 C.F.R. § 1.136(a).

The Office cannot approve the request at this time since the reasons provided do not meet any of the conditions under the mandatory or permissive categories enumerated in 37 CFR 10.40. Section 10.40 of Title 37 of the Code of Federal Regulation states, "[a] practitioner shall not withdraw from employment in a proceeding before the Office without permission from the Office[.]" More specifically, 37 CFR 10.40 states, "[i]f paragraph (b) of this section is not applicable, a practitioner may not request permission to withdraw in matter pending before the Office unless such request or such withdrawal is" for one the permissive reasons listed in 37 CFR 10.40(c). The reasons set forth in the request, (matter transferred, assignee's request), does not meet any the conditions set forth in 37 CFR 10.40.

In order to request or take action in a patent matter, the assignee must establish its ownership of the patent to the satisfaction of the Director. In this regard, a Statement under 37 CFR 3.73(b) must have either: (i) documentary evidence of a chain of title from the original owner to the assignee (*e.g.*, copy of an executed assignment), and a statement affirming that the documentary evidence of the chain of title from the original owner to the assignee was or concurrently is being

submitted for recordation pursuant to § 3.11; or (ii) a statement specifying where documentary evidence of a chain of title from the original owner to the assignee is recorded in the assignment records of the Office (*e.g.*, reel and frame number).

All future communications from the Office will continue to be directed to the above-listed address until otherwise notified by applicant.

Telephone inquiries concerning this decision should be directed to Michelle R. Eason at 571-272- 4231.

Michelle R. Eason
Petitions Examiner
Office of Petitions

cc: **CHOATES, HALL & STEWART LLP**
TWO INTERNATIONAL PLACE
BOSTON, MA 02110

UNITED STATES PATENT AND TRADEMARK OFFICE

COMMISSIONER FOR PATENTS
UNITED STATES PATENT AND TRADEMARK OFFICE
P.O. BOX 1450
ALEXANDRIA, VA 22313-1450
www.uspto.gov

AIR PRODUCTS AND CHEMICALS, INC.
PATENT DEPARTMENT
7201 HAMILTON BOULEVARD
ALLENTOWN, PA 18195-1501

COPY MAILED

JAN 13 2006

OFFICE OF PETITIONS

In re Application of :
Jianguo Xu, et al. :
Application No. 10/739,970 : ON PETITION
Filed: December 18, 2003 :
Attorney Docket No. 06448 USA :

This is a decision on the petition under 37 CFR 1.313, filed January 9, 2006, requesting that the above-identified application be withdrawn from issue. A Request for Continued Examination (RCE) and an Information Disclosure Statement (IDS) accompanied the present petition.

The petition is dismissed as moot.

Since the RCE was filed within the period set for paying the issue fee, as required by the Notice of Allowance and Issue Fee Due mailed October 11, 2005, prosecution is reopened in the present application and no petition under 37 CFR 1.313 is necessary.

Telephone inquiries relating to this decision should be directed to the undersigned at (571) 272-3204.

The application is being referred to Technology Center AU 1724 for processing of the RCE under 37 CFR 1.114.

Sherry D. Brinkley
Petitions Examiner
Office of Petitions
Office of the Deputy Commissioner
for Patent Examination Policy

Best Available Copy

OIPE IAP86 JUL 20 2009 PATENT & TRADEMARK OFFICE

IN THE UNITED STATES PATENT AND TRADEMARK OFFICE

In re **HAGEMEYER et al.**

Rule 1.53(b) Divisional Application of Application No.: 10/739,989

Examiner: LANGEL, Wayne A.

Filed Herewith: July 20, 2009

Attorney Docket No.: 054-0002DIV

Title: Platinum and Rhodium and/or Iron Containing Catalyst Formulations for Hydrogen Generation

Customer No.: 48481

Approved. WAL 12-7-09

PETITION UNDER 37 C.F.R. § 1.84(a)(2)

Commissioner for Patents
P. O. Box 1450
Alexandria, VA 22313-1450

Sir:

Pursuant to 37 C.F.R. § 1.84(a)(2), Applicants hereby request entry of color drawings in the present application.

Color drawings are necessary in the present application because they provide a greatly simplified illustration of complex data and test results that would otherwise require voluminous representations to depict in a non-color format. Furthermore, the color drawings greatly reduce the otherwise burdensome work and expense that would be involved if the information were to be somehow converted to a non-color format, and reduce the risk of eliminating data that might occur if the information were converted to a non-color format.

07/21/2009 SZEWDIE1 00000017 10739989
01 FC:1464 130.00 OP

Best Available Copy

Petition under 1.84(a)(2)
Rule 1.53(b) Divisional Application of
U.S. Application No. 10/739,989

Atty. Docket No. 054-0002DIV

Filed herewith are three (3) sets of color drawings, and a black and white photocopy set that accurately depicts, to the extent possible, the subject matter shown in the color drawings. The specification includes the paragraph required by 37 C.F.R. § 1.84(a)(2)(iv).

The requisite fee under 37 C.F.R. § 1. 17(h) ($130.00) is also enclosed herewith.

Respectfully submitted,

Date: **July 20, 2009**

Samuel P. Burkholder
Reg. No. 40,541

Customer Number: 48481

CAPITOL CITY TECHLAW, PLLC
113 S. Columbus St., Suite 311
Alexandria, VA 22314
Tel: 888.703.1110
Fax: 888.703.4446

UNITED STATES PATENT AND TRADEMARK OFFICE

Commissioner for Patents
United States Patent and Trademark Office
P.O. Box 1450
Alexandria, VA 22313-1450
www.uspto.gov

SHELL OIL COMPANY
PO BOX 2463
HOUSTON TX 77252-2463

COPY MAILED
AUG 24 2006
OFFICE OF PETITIONS

In re Application of :
Bos, et al. :
Application No. 10/740,048 : ON PETITION
Filed: December 18, 2003 :
Attorney Docket No. TS-1197 (US) :

This is a decision on the petition to revive an abandoned application under 37 CFR 1.137(b), filed February 2, 2006.

The petition under 37 CFR 1.137(b) is **GRANTED**.

The above-identified application became abandoned for failure to timely file a response to the non-final Office action mailed June 27, 2005, which set a shortened statutory period for reply of three (3) months. No extensions of time under 37 CFR 1.136(a) were purchased. Accordingly, no reply having received, the application became abandoned on September 28, 2005. The mailing of this decision precedes the mailing of a Notice of Abandonment.

With the instant petition, petitioner paid the petition fee, submitted the required reply in the form of an Amendment, and made the proper statement of unintentional delay.

The matter is being forwarded to Group Art Unit 1625 for consideration of the Amendment filed February 2, 2006.

Telephone inquiries related to this decision should be directed to the undersigned at (571)272-3207.

Cliff Congo
Petitions Attorney
Office of Petitions

UNITED STATES PATENT AND TRADEMARK OFFICE

Commissioner for Patents
United States Patent and Trademark Office
P.O. Box 1450
Alexandria, VA 22313-1450
www.uspto.gov

SHELL OIL COMPANY
P.O. BOX 2463
HOUSTON, TX 77252-2463

MAILED

JAN 23 2009

OFFICE OF PETITIONS

In re Application of :
Alouisius Nicolaas Rene Bos et al :
Application No. 10/740,048 : ON PETITION
Filed: December 18, 2003 :
Attorney Docket No. TS-1197 (US) JDA:KNL :

This is a decision on the petition under 37 CFR 1.137(b), filed December 29, 2008, to revive the above-identified application.

The petition is **GRANTED**.

The two-month period for filing an appeal brief in triplicate (accompanied by the fee required by 37 CFR 1.17(c)), runs from the date of this decision.

The above-identified application became abandoned for failure to reply in a timely manner to the final Office action mailed June 20, 2008, which set a shortened statutory period for reply of three (3) months. No extensions of time under the provisions of 37 CFR 1.136(a) were obtained. Accordingly, the above-identified application became abandoned on September 21, 2008.

Telephone inquiries concerning this decision should be directed to Irvin Dingle at (571) 272-3210.

This matter is being forwarded to Technology Center AU 1625 for further processing.

Irvin Dingle
Petitions Examiner
Office of Petitions

UNITED STATES PATENT AND TRADEMARK OFFICE

Commissioner for Patents
United States Patent and Trademark Office
P.O. Box 1450
Alexandria, VA 22313-1450
www.uspto.gov

COPY MAILED

NOV 1 3 2006

OFFICE OF PETITIONS

MELDEN & CARROLL, LLP
Suite 1700
380 Lexington Avenue
New York NY 10168

In re Application of :
Hadjiargyrou et al. :
Application No. 10/740,052 : DECISION GRANTING PETITION
Filed: December 18, 2003 :
Attorney Docket No. STONYB-08008 :

This is a decision on the "Petition under 37 CFR 1.53(e)" filed August 11, 2006 (certificate of mailing August 7, 2006) requesting to accept 14 sheets of drawings as part of the original disclosure.

The application was filed on December 18, 2003. However, on July 25, 2005, the Office of Initial Patent Examination (OIPE) mailed a Notice To File Missing Parts of a Nonprovisional application, "Notice" stating that the application had been accorded a filing date of December 18, 2003 but the oath or declaration was unsigned and the application failed to comply with 37 CFR 1.821-1.825. The Notice failed to mention no drawings were submitted with the application. An Office Action mailed on May 5, 2006 informed applicant that drawings were not present in the above-identified application.

In response, 14 sheets of drawings and the present petition were filed on August 11, 2006. The petition contends that the application as filed contained 14 sheets of drawings and was described in the original filed specification. In support, the petition is accompanied by a copy of applicants' postcard receipt which acknowledges "14 sheets of informal drawings"

Applicants' postcard receipt is prima facie[2] evidence that the drawings were received on December 18, 2003. A review of Office records shows the copy of the 14 sheets of drawings submitted on December 18, 2003 have not been located.

---

[2]A postcard receipt which itemizes and properly identifies the items which are being filed serves as prima facie evidence of receipt in the office of all items listed thereon. See MPEP 503.

Since the original drawings cannot be located in the Office, the copy of the drawings supplied on August 11, 2006, will be used for processing and examination purposes.

The petition is **Granted**. The $400.00 petition fee will be refunded.

The address provided on the petition differs from the correspondence address of record. A courtesy copy of this decision will be mailed to Petitioner. However, all future correspondence will be directed to the address of record until such time as appropriate instructions are received to the contrary

The application will be returned to the Office of Initial Patent Examination for further processing with a **filing date of December 18, 2003**, using the 14 sheets of drawings supplied on August 11, 2006. Thereafter the application will be returned to Art Unit 1653.

Telephone inquiries specific to this matter should be directed to the undersigned at (571) 272 -3215.

Charlema R. Grant

Petitions Attorney

Office of Petitions

cc: Lisa G De Berg
Medlen & Carroll, LLP
101 Howard Street, Suite 350
San Francisco, California 94105

UNITED STATES PATENT AND TRADEMARK OFFICE

Commissioner for Patents
United States Patent and Trademark Office
P.O. Box 1450
Alexandria, VA 22313-1450
www.uspto.gov

Roche Diagnostics Corporation
9115 Hague Road
PO Box 50457
Indianapolis IN 46250-0457

COPY MAILED

NOV 0 5 2004

OFFICE OF PETITIONS

In re Application of

Haar, et al.

Application No. 10/740,056

Filed: December 18, 2003

Attorney Docket No.: RDID 03058US

DECISION ON PETITION

This is a decision on the petition under 37 CFR 1.10 filed, September 30, 2004.

The petition is **dismissed.**

Any request for reconsideration of this decision must be submitted within TWO (2) MONTHS from the mail date of this decision. Extensions of time under 37 CFR 1.136(a) are permitted. The reconsideration request should include a cover letter entitled "Renewed Petition" under 37 CFR 1.10."

The instant petition was filed to correct what petitioner believed was an incorrect filing date accorded the above-cited application. Petitioner maintains that the correct filing date for the application should be December 17, 2003, not the currently accorded date of December 18, 2003. In support thereof, petitioner filed a copy of copy of the Office date-stamped postcard, the application transmittal sheet, and the Express Mail certificate indicating that the application was deposited with the Express Mail service on December 17, 2003..

Section 1.10(a) of the Title 37 of the Code of Federal Regulations indicates that correspondence received by the Patent and Trademark Office that was delivered by Express Mail will be considered filed in the Office on the date of deposit with the United States Postal Service. Where there is a discrepancy between the date of deposit as shown on the Express Mail label and the filing date accorded the correspondence by the Office, 37 CFR 1.10(c) provides that an applicant may petition to have the Commissioner accord the correspondence a filing date as of the "date in" on Express Mail label. In accordance with 37 CFR 1.10(c), a successful petition must:

(1) . . . be filed promptly after the person becomes aware that the Office has accorded

or will accord a filing date other than the USPS deposit date;

2) [provide] the number on the Express Mail mailing label was placed on a paper(s) or fee(s) that constituted the correspondence prior to the original mailing by Express Mail; and

(3) . . . include a true copy of the Express Mail mailing label showing the date-in and of any other official notation by the USPS relied upon to show the date of deposit.

The instant petition does not satisfy the requirements of item (3) above.

A true copy of Express Mail label EV288800940US showing a date-in of December 17, 2004, was not found with the petition papers. In order for a petition under 37 CFR 1.10(c) to be considered grantable, petitioner must provide a true copy of the subject Express Mail label with any renewed petition filed.

Further correspondence with respect to this matter should be addressed as follows:

By mail: Mail Stop Petitions
Commissioner for Patents
Box 1450
Alexandria, VA 22313-1450

By facsimile: (571) 273-0025
Attn: Office of Petitions

Telephone inquiries concerning this decision should be directed to the undersigned at (571) 272-3222.

Kenya A. McLaughlin
Petitions Attorney
Office of Petitions

UNITED STATES PATENT AND TRADEMARK OFFICE

COMMISSIONER FOR PATENTS
UNITED STATES PATENT AND TRADEMARK OFFICE
P.O. BOX 1450
ALEXANDRIA, VA 22313-1450
www.uspto.gov

DOCKET ADMINISTRATOR
LOWENSTEIN SANDLER PC
65 LIVINGSTON AVENUE
ROSELAND NJ 07068

MAILED

MAY 12 2005

Technology Center 2100

In re Application of: Rao
Application No. 10/740,058
Filed: December 18, 2003
For: SYSTEM AND METHOD FOR PROCESSING PARTIALLY UNSTRUCTURED DATA

DECISION ON PETITION TO MAKE SPECIAL (ACCELERATED EXAMINATION) UNDER M.P.E.P. §708.02 (VIII)

This is a response to the petition filed 10 May 2004, under 37 C.F.R. §1.102(d) and M.P.E.P. §708.02 (VIII): Accelerated Examination, to make the above-identified application special.

The Petition is **GRANTED**.

M.P.E.P. §708.02, Section VIII which sets out the prerequisites for a grantable petition for Accelerated Examination under 37 C.F.R. §1.102(d) states in relevant part:

A new application (one which has not received any examination by the examiner) may be granted special status provided that applicant (and this term includes applicant's attorney or agent) complies with each of the following items:

(a) Submits a petition to make special accompanied by the fee set forth in **37 CFR 1.17(h)**;

(b) Presents all claims directed to a single invention, or if the Office determines that all the claims presented are not obviously directed to a single invention, will make an election without traverse as a prerequisite to the grant of special status;

(c) Submits a statement(s) that a pre-examination search was made, listing the field of search by class and subclass, publication, Chemical Abstracts, foreign patents, etc. The pre-examination search must be directed to the invention as claimed in the application for which special status is requested. A search made by a foreign patent office satisfies this requirement;

(d) Submits one copy each of the references deemed most closely related to the subject matter encompassed by the claims if said references are not already of record; and

(e) Submits a detailed discussion of the references, which discussion points out, with the particularity required by 37 CFR 1.111 (b) and (c), how the claimed subject matter is patentable over the references.

In those instances where the request for this special status does not meet all the prerequisites set forth above, **applicant will be notified and the defects in the request will be stated**. The application will remain in the status of a new application awaiting action in its regular turn. In those instances where a request is defective in one or more respects, applicant will be given one opportunity to perfect the request in a renewed petition to make special. If perfected, the request will then be granted. If not perfected in the first renewed petition, any additional renewed petitions to make special may or may not be considered at the discretion of the Technology Center (TC) Special Program Examiner.

Applicants' submission meets all the criteria set out above. Accordingly, the petition is **GRANTED**. Nevertheless, it is noted that applicants may wish to be more precise and/or thorough in the pre-examination search. For example, the discussion indicates that none of the five references deemed "most closely related" are related to the financial context. However, the field of search suggests that no field related to a financial context was searched.

The application file is being forwarded to the Examiner of Record for accelerated examination according to the procedures set forth in MPEP § 708.02, Section VIII.

Pinchus M. Laufer
Special Program Examiner
Technology Center 2100
Computer Architecture, Software and Information Security
571-272-3599

ds

UNITED STATES PATENT AND TRADEMARK OFFICE

UNITED STATES DEPARTMENT OF COMMERCE
United States Patent and Trademark Office
Address: COMMISSIONER FOR PATENTS
P.O. Box 1450
Alexandria, Virginia 22313-1450
www.uspto.gov

PATENT DOCKET ADMINISTRATOR
LOWENSTEIN SANDLER PC
65 LIVINGSTON AVENUE
ROSELAND, NJ 07068

Mail Date: 04/21/2010

Applicant	: Srinivasan N. Rao	: DECISION ON REQUEST FOR
Patent Number	: 7593876	: RECALCULATION of PATENT
Issue Date	: 09/22/2009	: TERM ADJUSTMENT IN VIEW
Appliction No	: 10/740,058	: OF WYETH AND NOTICE OF INTENT TO
Filed	: 12/18/2003	: ISSUE CERTIFICATE OF CORRECTION
		:

The Request for Recalculation is **GRANTED** to the extent indicated.

The patent term adjustment has been determined to be **1224** days. The USPTO will *sua sponte* issue a certificate of correction reflecting the amount of PTA days determined by the recalculation.

Prior to the issuance of the certificate of correction, the USPTO will afford patentee an opportunity to be heard and request reconsideration. Accordingly, patentee has **one month or thirty (30) days**, whichever is longer, to file a request for reconsideration of this patent term adjustment calculation. See 35 U.S.C. 154(b)(3)(B)(ii) and 37 CFR 1.322(a)(4). No extensions of time will be granted under 37 CFR 1.136.

Patentee should use document code PET.OP if electronically filing a request for reconsideration of this patent term adjustment calculation. The patentee must also include the information required by 37 CFR 1.705(b)(2) and the fee required by 37 CFR 1.18(e). If patentee does not file a timely request for reconsideration of this patent term adjustment calculation including the information required by 37 CFR 1.705(b)(2) and the fee required by 37 CFR 1.18(e), the USPTO will issue a certificate of correction reflecting the PTA determination noted above.

Patentee should be aware that in order to preserve the right to review in the United States District Court for the District of Columbia of the USPTO patent term adjustment determination, patentee must ensure that he or she also take the steps required under 35 U.S.C. 154(b)(4)(A) in a timely manner. Nothing in the request for recalculation should be construed as providing an alternative time frame for commencing a civil action under 35 U.S.C. 154(b)(4)(A).

Any questions concerning this decision should be directed to the Office of Patent Legal Administration at 571-272-7702.

UNITED STATES PATENT AND TRADEMARK OFFICE

UNITED STATES DEPARTMENT OF COMMERCE
United States Patent and Trademark Office
Address: COMMISSIONER FOR PATENTS
P.O. Box 1450
Alexandria, Virginia 22313-1450
www.uspto.gov

VMWARE, INC.
DARRYL SMITH
3401 Hillview Ave.
PALO ALTO, CA 94304

Mail Date: 04/20/2010

Applicant	: Vladimir L. Kiriansky	: DECISION ON REQUEST FOR
Patent Number	: 7594111	: RECALCULATION of PATENT
Issue Date	: 09/22/2009	: TERM ADJUSTMENT IN VIEW
Appliction No	: 10/740,063	: OF WYETH AND NOTICE OF INTENT TO
Filed	: 12/18/2003	: ISSUE CERTIFICATE OF CORRECTION
		:

The Request for Recalculation is **GRANTED** to the extent indicated.

The patent term adjustment has been determined to be **1063** days. The USPTO will *sua sponte* issue a certificate of correction reflecting the amount of PTA days determined by the recalculation.

Prior to the issuance of the certificate of correction, the USPTO will afford patentee an opportunity to be heard and request reconsideration. Accordingly, patentee has **one month or thirty (30) days**, whichever is longer, to file a request for reconsideration of this patent term adjustment calculation. See 35 U.S.C. 154(b)(3)(B)(ii) and 37 CFR 1.322(a)(4). No extensions of time will be granted under 37 CFR 1.136.

Patentee should use document code PET.OP if electronically filing a request for reconsideration of this patent term adjustment calculation. The patentee must also include the information required by 37 CFR 1.705(b)(2) and the fee required by 37 CFR 1.18(e). If patentee does not file a timely request for reconsideration of this patent term adjustment calculation including the information required by 37 CFR 1.705(b)(2) and the fee required by 37 CFR 1.18(e), the USPTO will issue a certificate of correction reflecting the PTA determination noted above.

Patentee should be aware that in order to preserve the right to review in the United States District Court for the District of Columbia of the USPTO patent term adjustment determination, patentee must ensure that he or she also take the steps required under 35 U.S.C. 154(b)(4)(A) in a timely manner. Nothing in the request for recalculation should be construed as providing an alternative time frame for commencing a civil action under 35 U.S.C. 154(b)(4)(A).

Any questions concerning this decision should be directed to the Office of Patent Legal Administration at 571-272-7702.

UNITED STATES PATENT AND TRADEMARK OFFICE

UNITED STATES DEPARTMENT OF COMMERCE
United States Patent and Trademark Office
Address: COMMISSIONER FOR PATENTS
P.O. Box 1450
Alexandria, Virginia 22313-1450
www.uspto.gov

FROMMER LAWRENCE & HAUG LLP
745 Fifth Avenue
New York, NY 10151

Mail Date: 04/21/2010

Applicant	: George Burkhart	: DECISION ON REQUEST FOR
Patent Number	: 7612159	: RECALCULATION of PATENT
Issue Date	: 11/03/2009	: TERM ADJUSTMENT IN VIEW
Appliction No	: 10/740,064	: OF WYETH AND NOTICE OF INTENT TO
Filed	: 12/18/2003	: ISSUE CERTIFICATE OF CORRECTION
		:

The Request for Recalculation is **GRANTED** to the extent indicated.

The patent term adjustment has been determined to be **917** days. The USPTO will *sua sponte* issue a certificate of correction reflecting the amount of PTA days determined by the recalculation.

Prior to the issuance of the certificate of correction, the USPTO will afford patentee an opportunity to be heard and request reconsideration. Accordingly, patentee has **one month or thirty (30) days**, whichever is longer, to file a request for reconsideration of this patent term adjustment calculation. See 35 U.S.C. 154(b)(3)(B)(ii) and 37 CFR 1.322(a)(4). No extensions of time will be granted under 37 CFR 1.136.

Patentee should use document code PET.OP if electronically filing a request for reconsideration of this patent term adjustment calculation. The patentee must also include the information required by 37 CFR 1.705(b)(2) and the fee required by 37 CFR 1.18(e). If patentee does not file a timely request for reconsideration of this patent term adjustment calculation including the information required by 37 CFR 1.705(b)(2) and the fee required by 37 CFR 1.18(e), the USPTO will issue a certificate of correction reflecting the PTA determination noted above.

Patentee should be aware that in order to preserve the right to review in the United States District Court for the District of Columbia of the USPTO patent term adjustment determination, patentee must ensure that he or she also take the steps required under 35 U.S.C. 154(b)(4)(A) in a timely manner. Nothing in the request for recalculation should be construed as providing an alternative time frame for commencing a civil action under 35 U.S.C. 154(b)(4)(A).

Any questions concerning this decision should be directed to the Office of Patent Legal Administration at 571-272-7702.

UNITED STATES PATENT AND TRADEMARK OFFICE

Commissioner for Patents
United States Patent and Trademark Office
P.O. Box 1450
Alexandria, VA 22313-1450
www.uspto.gov

CANTOR COLBURN
55 GRIFFIN ROAD SOUTH
BLOOMFIELD, CT 06002

COPY MAILED

NOV 0 1 2005

OFFICE OF PETITIONS

In re Application of :
Eric Thomas Gohr et al :
Application No. 10/740,074 : ON PETITION
Filed: December 17, 2003 :
Attorney Docket No. 08CL5989-7 :

This is a decision on the petition under 37 CFR 1.137(b), filed September 1, 2005, and resubmitted on October 18, 2005, to revive the above-identified application.

The petition is **GRANTED**.

The above-identified application became abandoned for failure to reply within the meaning of 37 CFR 1.113 in a timely manner to the final Office action mailed December 22, 2004, which set a shortened statutory period for reply of three (3) months. No extensions of time under the provisions of 37 CFR 1.136(a) were obtained. Accordingly, the above-identified application became abandoned on March 23, 2005.

The petition satisfies the conditions for revival pursuant to the provisions of 37 CFR 1.137(b) in that (1) the reply in the form of a Request for Continued Examination (RCE); (2) the petition fee; and (3) the required statement of unintentional delay have been received. Accordingly, the reply to the final Office action of December 22, 2004 is accepted as having been unintentionally delay.

The second RCE fee of $790 is unnecessary and will be credited to Deposit Account No. 07-0893 as authorized.

Telephone inquiries concerning this decision should be directed to Wan Laymon at (571) 272-3220.

This matter is being referred to Technology Center AU 1714.

Wan Laymon
Petitions Examiner
Office of Petitions

UNITED STATES PATENT AND TRADEMARK OFFICE

Commissioner for Patents
United States Patent and Trademark Office
P.O. Box 1450
Alexandria, VA 22313-1450
www.uspto.gov

COPY MAILED

JUL 15 2004

OFFICE OF PETITIONS

ACLARA BIOSCIENCES, INC.
1288 PEAR AVENUE
MOUNTAIN VIEW CA 94043

In re Application of
Sharat Singh et al
Application No. 10/740,079
Filed: December 18, 2003
Attorney Docket No. 089.00US

: DECISION ON PETITIONS
: UNDER 37 CFR 1.78(a)(3) AND
: UNDER 37 CFR 1.78(a)(6)

This is a decision on the petition filed June 7, 2004, which is being treated under 37 CFR §§ 1.78(a)(3) and 1.78(a)(6), to accept an unintentionally delayed claim under 35 U.S.C. §§ 120 and 365(c) and §119(e) for the benefit of the prior-filed nonprovisional and provisional applications set forth in the concurrently filed amendment.

The petition is **DISMISSED**.

A petition for acceptance of a claim for late priority under 37 CFR §§ 1.78(a)(3) and 1.78(a)(6) is only applicable to those applications filed on or after November 29, 2000. Further, the petition is appropriate only after the expiration of the period specified in 37 CFR §§ 1.78(a)(2)(ii) and 1.78(a)(5)(ii). In addition, the petition under 37 CFR §§ 1.78(a)(3) and 1.78(a)(6) must be accompanied by:

(1) the reference required by 35 U.S.C. §§ 120 and 119(e) and 37 CFR §§ 1.78(a)(2)(i) and 1.78(a)(5)(i) of the prior-filed application, unless previously submitted;

(2) the surcharge set forth in § 1.17(t); and

(3) a statement that the entire delay between the date the claim was due under 37 CFR §§ 1.78(a)(2)(ii) and 1.78(a)(5)(ii) and the date the claim was filed was unintentional. The Commissioner may require additional where there is a question whether the delay was unintentional.

The petition fails to comply with item (1) above.

The amendment filed with the instant petition reads that the instant application claims benefit to Provisional Application Nos. 60/304,296 and 60/325,292. However, the provisional applications were filed in the year of 2001, whereas the instant application was filed December 18, 2003. Therefore, the instant application was filed more than twelve months from the filing of the provisional applications.

Accordingly, before the petition under 37 CFR §§ 1.78(a)(3) and 1.78(a)(6) can be granted, a renewed petition under 37 CFR §§ 1.78(a)(3) and 1.78(a)(6) and a substitute amendment correcting the above matter is required.

Further correspondence with respect to this matter should be addressed as follows:

By mail: Mail Stop Petition
Commissioner for Patents
Post Office Box 1450
Alexandria, Va 22313-1450

By FAX: (703) 872-9306
Attn: Office of Petitions

By hand: 2011 South Clark Place
Crystal Plaza Two Lobby
Room 1B03
Arlington, VA 22202

Any questions concerning this matter may be directed to the undersigned at (703) 305-8859.

Karen Creasy

Karen Creasy
Petitions Examiner
Office of Petitions
Office of the Deputy Commissioner
for Patent Examination Policy

UNITED STATES PATENT AND TRADEMARK OFFICE

Commissioner for Patents
United States Patent and Trademark Office
P.O. Box 1450
Alexandria, VA 22313-1450
www.uspto.gov

COPY MAILED

OCT 12 2005

OFFICE OF PETITIONS

MACEVICZ, STEPHEN C.
345 OYSTER POINT BLVD.
SOUTH SAN FRANCISCO, CA 94080

In re Application of
Sharat Singh et al
Application No. 10/740,079
Filed: December 18, 2003
Attorney Docket No. 089.00US

: DECISION ON PETITIONS
: UNDER 37 CFR 1.78(a)(3) AND
: UNDER 37 CFR 1.78(a)(6)

This is a decision on the renewed petitions under 37 CFR §§ 1.78(a)(3) and 1.78(a)(6), filed July 11, 2005, to accept an unintentionally delayed claim under 35 U.S.C. §§120, 365(c) and 119(e) for the benefit of the prior-filed applications set forth in the concurrently filed amendment.

The petitions are **Granted**.

A petition for acceptance of a claim for late priority under 37 CFR §§ 1.78(a)(3) and 1.78(a)(6) is only applicable to those applications filed on or after November 29, 2000. Further, the petition is appropriate only after the expiration of the period specified in 37 CFR §§ 1.78(a)(2)(ii) and 1.78(a)(5)(ii). In addition, the petition under 37 CFR §§ 1.78(a)(3) and 1.78(a)(6) must be accompanied by:

(1) the reference required by 35 U.S.C. §§ 120 and 119(e) and 37 CFR §§ 1.78(a)(2)(i) and 1.78(a)(5)(i) of the prior-filed application, unless previously submitted;
(2) the surcharge set forth in § 1.17(t); and
(3) a statement that the entire delay between the date the claim was due under 37 CFR §§ 1.78(a)(2)(ii) and 1.78(a)(5)(ii) and the date the claim was filed was unintentional. The Commissioner may require additional where there is a question whether the delay was unintentional.

The instant nonprovisional application was filed after November 29, 2000, and the claim herein for the benefit of priority to the prior-filed applications is submitted after expiration of the period specified in 37 CFR §§ 1.78(a)(2)(ii) and 1.78(a)(5)(ii). Therefore, this is a proper petition under 37 CFR §§ 1.78(a)(3) and 1.78(a)(6).

The instant nonprovisional application was pending at the time of filing of the reference to the prior-filed provisional application as required by 37 CFR 1.78(a)(5)(ii). Additionally,

intermediate Application No. PCT/US02/21339, was filed within twelve months of the filing date of the prior-filed provisional applications, for which priority is claimed.

The petition complies with the requirements for a grantable petition under 37 CFR §§1.78(a)(3) and 1.78(a)(6) in that (1) a reference to the above-noted, prior-filed nonprovisional applications has been included in an amendment to the first sentence of the specification following the title and in an Application Data Sheet, as provided by 37 CFR §§ 1.78(a)(2)(iii) and 1.78(a)(5)(iii); (2) the surcharge fee required by 37 CFR 1.17(t) has been submitted; and (3) the petition contains a proper statement of unintentional delay. Accordingly, having found that the instant petition for acceptance of an unintentionally delayed claim for the benefit of priority under 35 U.S.C. §§ 120 and 119(e) to the above-noted, prior-filed nonprovisional applications satisfies the conditions of 37 CFR §§ 1.78(a)(3) and 1.78(a)(6), the petition is granted.

The granting of the petition to accept the delayed benefit claim to the prior-filed applications under 37 CFR §§ 1.78(a)(3) and 1.78(a)(6) should not be construed as meaning that the instant application is entitled to the benefit of the filing date of the prior-filed applications. In order for the instant application to be entitled to the benefit of the prior-filed applications, all other requirements under 35 U.S.C. §§120 and 365(c) and 1.78(a)(1) and (a)(2) and under 35 U.S.C. §119(e) and 37 CFR 1.78(a)(4) and (a)(5) must be met. Similarly, the fact that the corrected Filing Receipt accompanying this decision on petition includes the prior-filed applications should not be construed as meaning that applicant is entitled to the claim for benefit of priority to the prior-filed applications noted thereon. Accordingly, the examiner will, in due course, consider this benefit claim and determine whether the instant application is entitled to the benefit of the earlier filing date.

A corrected Filing Receipt, which includes the priority claim to the prior-filed applications, accompanies this decision on petition.

There is no indication that the person signing the instant petition was ever given a power of attorney or authorization of agent to prosecute the above-identified application. If the person signing the instant petition desires to receive future correspondence regarding this application, the appropriate power of attorney or authorization of agent must be submitted. While a courtesy copy of this decision is being mailed to the person signing the instant petition, all future correspondence will be directed to the address currently of record until such time as appropriate instructions are received to the contrary.

Any questions concerning this matter may be directed to the undersigned at (571) 272-3208. All other inquiries concerning either the examination procedures or status of the application should be directed to the Technology Center.

This application is being forwarded to Technology Center Art Unit 1637 for appropriate action on the amendment submitted July 11, 2005, including consideration by the examiner of the claim under 35 U.S.C. § §120 and 365(c) and 37 CFR 1.78(a)(2) for the benefit of the prior-filed application, and for consideration of the claim under 35 U.S.C. §119(e) and 37 CFR 1.78(a)(5) for the benefit of the prior-filed provisional applications.

Karen Creasy

Karen Creasy
Petitions Examiner
Office of Petitions

ATTACHMENT : Corrected Filing Receipt

cc:
TAMERA M. PERTMER
JONES DAY
12750 HIGH BLUFF DRIVE, SUITE 300
SAN DIEGO, CA 92130

UNITED STATES PATENT AND TRADEMARK OFFICE

Commissioner for Patents
United States Patent and Trademark Office
P.O. Box 1450
Alexandria, VA 22313-1450
www.uspto.gov

PHARMACIA & UPJOHN
301 HENRIETTA ST
0228-32-LAW
KALAMAZOO, MI 49007

COPY MAILED

JAN 0 9 2006

OFFICE OF PETITIONS

In re Application of: :
Groppi et al. :
Application No. 10/740,083 : DECISION ON
Filed: December 18, 2003 : PETITION
For: METHODS AND COMPOSITIONS FOR :
MEASURING ION CHANNEL CONDUCTANCE :

This is a decision in response to the Petition under 37 CFR 1.137(b), filed September 19, 2005, to revive the above-identified application.

This Petition is hereby **granted**.

The above-identified application became abandoned for failure to timely and properly reply to the Office Communication mailed January 3, 2005. The Office Communication required Application to respond make a restriction/election. The Restriction/Election requirement set a one (1) month period for reply, and also provided for extensions of time under 37 CFR 1.136(a). No reply having been received, the application became abandoned April 4, 2005. A Notice of Abandonment was mailed August 11, 2005.

With the instant petition, Petitioner has satisfied the requirements of a grantable petition under 37 CFR 1.137(b). A Response to the Restriction/Election requirement was filed with the instant petition. Accordingly, the petition is granted.

This application is being forwarded to Technology Center Art Unit 1646 for processing of the Response to the Restriction/Election requirement.

The address on the petition is different from the address of record. If Petitioner desires to receive further correspondence with respect to this application, a change of correspondence address must be filed. A courtesy copy of this Decision is

being forwarded to Petitioner at the address appearing on the petition; however, all future correspondence will be sent to address of record until instructions to the contrary are received.

Telephone inquiries concerning this decision should be directed to the undersigned at (571) 272-3232.

Derek L. Woods
Petitions Attorney
Office of Petitions

Cc: Pfizer, Inc.
Patent Department, 5th Floor
150 E. 42nd Street
New York, NY 10017-5755

UNITED STATES PATENT AND TRADEMARK OFFICE

Commissioner for Patents
United States Patent and Trademark Office
P.O. Box 1450
Alexandria, VA 22313-1450
www.uspto.gov

JOHN T. WINBURN
100 BOSCH BOULEVARD
NEW BERN NC 28562

COPY MAILED
AUG 0 7 2006
OFFICE OF PETITIONS

In re Application of	:	
Erich BOTT et al.	:	DECISION ON PETITIONS
Application No. 10/740,090	:	UNDER 37 CFR 1.183 AND
Filed: December 18, 2003	:	UNDER 37 CFR 1.78(a)(3)
Attorney Docket No. 2001P15111WOUS	:	

This is a decision on the petition under 37 CFR 1.183, filed March 20, 2006, requesting waiver of 37 CFR 1.78(a)(3) as that rule operates in conjunction with 37 CFR 1.17(t), and a decision on the petition under 37 CFR 1.78(a)(3), filed April 28, 2006, to accept an unintentionally delayed claim under 35 U.S.C. § 120 and 365(c) for the benefit of priority to prior-filed PCT Application No. PCT/EP02/06516, filed June 13, 2002, set forth in the accompanying Application Data Sheet.

The petition under 37 CFR 1.183 is **DISMISSED** as moot in view of the request filed April 28, 2006, withdrawing the petition to waive the surcharge fee requirement of 37 CFR 1.78(a)(3). No fee has been assessed to petitioner's deposit account for the petition under 37 CFR 1.183.

The petition under 37 CFR 1.78(a)(3) is **GRANTED.**

A petition for acceptance of a claim for late priority under 37 CFR 1.78(a)(3) is only applicable to those applications filed on or after November 29, 2000. Further, the petition is appropriate only after the expiration of the period specified in 37 CFR 1.78(a)(2)(ii). In addition, the petition under 37 CFR 1.78(a)(3) must be accompanied by:

(1) the reference required by 35 U.S.C. § 120 and 37 CFR 1.78(a)(2)(i) of the prior-filed application, unless previously submitted;

(2) the surcharge set forth in § 1.17(t); and

(3) a statement that the entire delay between the date the claim was due under 37 CFR 1.78(a)(2)(ii) and the date the claim was filed was unintentional. The Commissioner may require additional information where there is a question whether the delay was unintentional.

All the above requirements having been satisfied, the late claim for priority under 35 U.S.C. § 120 and 365(c) is accepted as being unintentionally delayed.

The granting of the petition to accept the delayed benefit claim to the prior-filed application under 37 CFR 1.78(a)(3) should not be construed as meaning that the application is entitled to the benefit of the prior-filed application. In order for the application to be entitled to the benefit of the prior-filed application, all other requirements under 35 U.S.C. §§ 120 and 365(c) and 37 CFR 1.78(a)(1) and (a)(2) must be met. Similarly, the fact that the corrected Filing Receipt accompanying this decision on petition includes the prior-filed application should not be construed as meaning that applicant is entitled to the claim for benefit of priority to the prior-filed application noted thereon. Accordingly, the examiner will, in due course, consider this benefit claim and determine whether the application is entitled to the benefit of the earlier filing date.

A corrected Filing Receipt, which includes the priority claim to the prior-filed application, accompanies this decision on petition.

Any inquiries concerning this decision may be directed to David Bucci at (571) 272-7099. All other inquiries concerning either the examination procedures or status of the application should be directed to the Technology Center.

This application is being forwarded to the examiner of Technology Center Art Unit 3679 for appropriate action on the amendment filed April 28, 2006, including consideration of applicant's entitlement to claim benefit of priority under 35 U.S.C. § 120 and 365(c) to the above-noted, prior-filed PCT application.

David Bucci
Petitions Examiner
Office of Petitions

ATTACHMENT: Corrected Filing Receipt

UNITED STATES PATENT AND TRADEMARK OFFICE

UNITED STATES DEPARTMENT OF COMMERCE
United States Patent and Trademark Office
Address: COMMISSIONER FOR PATENTS
P.O. Box 1450
Alexandria, Virginia 22313-1450
www.uspto.gov

APPL NO.	FILING OR 371 (c) DATE	ART UNIT	FIL FEE REC'D	ATTY.DOCKET NO	DRAWINGS	TOT CLMS	IND CLMS
10/740,090	12/18/2003	3679	900	2001P15111WOUS	2	8	1

CONFIRMATION NO. 1348

000046726
JOHN T. WINBURN
100 BOSCH BOULEVARD
NEW BERN, NC 28562

CORRECTED FILING RECEIPT

OC000000019906377

Date Mailed: 08/04/2006

Receipt is acknowledged of this regular Patent Application. It will be considered in its order and you will be notified as to the results of the examination. Be sure to provide the U.S. APPLICATION NUMBER, FILING DATE, NAME OF APPLICANT, and TITLE OF INVENTION when inquiring about this application. Fees transmitted by check or draft are subject to collection. Please verify the accuracy of the data presented on this receipt. **If an error is noted on this Filing Receipt, please mail to the Commissioner for Patents P.O. Box 1450 Alexandria Va 22313-1450. Please provide a copy of this Filing Receipt with the changes noted thereon. If you received a "Notice to File Missing Parts" for this application, please submit any corrections to this Filing Receipt with your reply to the Notice. When the USPTO processes the reply to the Notice, the USPTO will generate another Filing Receipt incorporating the requested corrections (if appropriate).**

Applicant(s)

Erich Bott, Hollstadt, GERMANY;
Wolfgang Kemmerzell, Gersfeld, GERMANY;

Assignment For Published Patent Application

BSH Bosch und Siemens Hausgerate GmbH, Munich, GERMANY

Power of Attorney: The patent practitioners associated with Customer Number **000046726**.

Domestic Priority data as claimed by applicant

This application is a CON of PCT/EP02/06516 06/13/2002

Foreign Applications

GERMANY 101 31 175.3 06/29/2001
If Required, Foreign Filing License Granted: 03/30/2004

The country code and number of your priority application, to be used for filing abroad under the Paris Convention, is US10/740,090

Projected Publication Date: Not Applicable

Non-Publication Request: No

Early Publication Request: No

Title

Vacuum cleaner

Preliminary Class

285

PROTECTING YOUR INVENTION OUTSIDE THE UNITED STATES

Since the rights granted by a U.S. patent extend only throughout the territory of the United States and have no effect in a foreign country, an inventor who wishes patent protection in another country must apply for a patent in a specific country or in regional patent offices. Applicants may wish to consider the filing of an international application under the Patent Cooperation Treaty (PCT). An international (PCT) application generally has the same effect as a regular national patent application in each PCT-member country. The PCT process **simplifies** the filing of patent applications on the same invention in member countries, but **does not result** in a grant of "an international patent" and does not eliminate the need of applicants to file additional documents and fees in countries where patent protection is desired.

Almost every country has its own patent law, and a person desiring a patent in a particular country must make an application for patent in that country in accordance with its particular laws. Since the laws of many countries differ in various respects from the patent law of the United States, applicants are advised to seek guidance from specific foreign countries to ensure that patent rights are not lost prematurely.

Applicants also are advised that in the case of inventions made in the United States, the Director of the USPTO must issue a license before applicants can apply for a patent in a foreign country. The filing of a U.S. patent application serves as a request for a foreign filing license. The application's filing receipt contains further information and guidance as to the status of applicant's license for foreign filing.

Applicants may wish to consult the USPTO booklet, "General Information Concerning Patents" (specifically, the section entitled "Treaties and Foreign Patents") for more information on timeframes and deadlines for filing foreign patent applications. The guide is available either by contacting the USPTO Contact Center at 800-786-9199, or it can be viewed on the USPTO website at http://www.uspto.gov/web/offices/pac/doc/general/index.html.

For information on preventing theft of your intellectual property (patents, trademarks and copyrights), you may wish to consult the U.S. Government website, http://www.stopfakes.gov. Part of a Department of Commerce initiative, this website includes self-help "toolkits" giving innovators guidance on how to protect intellectual property in specific countries such as China, Korea and Mexico. For questions regarding patent enforcement issues, applicants may call the U.S. Government hotline at 1-866-999-HALT (1-866-999-4158).

LICENSE FOR FOREIGN FILING UNDER
Title 35, United States Code, Section 184
Title 37, Code of Federal Regulations, 5.11 & 5.15

GRANTED

The applicant has been granted a license under 35 U.S.C. 184, if the phrase "IF REQUIRED, FOREIGN FILING LICENSE GRANTED" followed by a date appears on this form. Such licenses are issued in all applications where the conditions for issuance of a license have been met, regardless of whether or not a license may be required as set forth in 37 CFR 5.15. The scope and limitations of this license are set forth in 37 CFR 5.15(a) unless an earlier license has been issued under 37 CFR 5.15(b). The license is subject to revocation upon written notification. The date indicated is the effective date of the license, unless an earlier license of similar scope has been granted under 37 CFR 5.13 or 5.14.

This license is to be retained by the licensee and may be used at any time on or after the effective date thereof unless it is revoked. This license is automatically transferred to any related applications(s) filed under 37 CFR 1.53(d). This license is not retroactive.

The grant of a license does not in any way lessen the responsibility of a licensee for the security of the subject matter as imposed by any Government contract or the provisions of existing laws relating to espionage and the national security or the export of technical data. Licensees should apprise themselves of current regulations especially with respect to certain countries, of other agencies, particularly the Office of Defense Trade Controls, Department of State (with respect to Arms, Munitions and Implements of War (22 CFR 121-128)); the Bureau of Industry and Security, Department of Commerce (15 CFR parts 730-774); the Office of Foreign Assets Control, Department of Treasury (31 CFR Parts 500+) and the Department of Energy.

NOT GRANTED

No license under 35 U.S.C. 184 has been granted at this time, if the phrase "IF REQUIRED, FOREIGN FILING LICENSE GRANTED" DOES NOT appear on this form. Applicant may still petition for a license under 37 CFR 5.12, if a license is desired before the expiration of 6 months from the filing date of the application. If 6 months has lapsed from the filing date of this application and the licensee has not received any indication of a secrecy order under 35 U.S.C. 181, the licensee may foreign file the application pursuant to 37 CFR 5.15(b).

UNITED STATES PATENT AND TRADEMARK OFFICE

Commissioner for Patents
United States Patent and Trademark Office
P.O. Box 1450
Alexandria, VA 22313-1450
www.uspto.gov

COPY MAILED

JAN 19 2007

OFFICE OF PETITIONS

BSH HOME APPLIANCES CORPORATION
INTELLECTUAL PROPERTY DEPARTMENT
100 BOSCH BOULEVARD
NEW BERN NC 28562

In re Application of :
Helmut JERG : DECISION ON PETITIONS
Application No. 10/740,104 : UNDER 37 CFR 1.183 AND
Filed: December 18, 2003 : UNDER 37 CFR 1.78(a)(3)
Attorney Docket No. 2001P13011WOUS :

This is a decision on the petition under 37 CFR 1.183, filed March 20, 2006, requesting waiver of 37 CFR 1.78(a)(3) as that rule operates in conjunction with 37 CFR 1.17(t), and a decision on the petition under 37 CFR 1.78(a)(3), filed April 28, 2006, to accept an unintentionally delayed claim under 35 U.S.C. § 120 and 365(c) for the benefit of priority to prior-filed PCT Application No. PCT/EP02/06471, filed June 12, 2002, set forth in the accompanying Application Data Sheet.

The petition under 37 CFR 1.183 is **DISMISSED** as moot in view of the request filed April 28, 2006, withdrawing the petition to waive the surcharge fee requirement of 37 CFR 1.78(a)(3). No fee has been assessed to petitioner's deposit account for the petition under 37 CFR 1.183.

The petition under 37 CFR 1.78(a)(3) is **GRANTED.**

A petition for acceptance of a claim for late priority under 37 CFR 1.78(a)(3) is only applicable to those applications filed on or after November 29, 2000. Further, the petition is appropriate only after the expiration of the period specified in 37 CFR 1.78(a)(2)(ii). In addition, the petition under 37 CFR 1.78(a)(3) must be accompanied by:

(1) the reference required by 35 U.S.C. § 120 and 37 CFR 1.78(a)(2)(i) of the prior-filed application, unless previously submitted;
(2) the surcharge set forth in § 1.17(t); and
(3) a statement that the entire delay between the date the claim was due under 37 CFR 1.78(a)(2)(ii) and the date the claim was filed was unintentional. The Commissioner may require additional information where there is a question whether the delay was unintentional.

All the above requirements having been satisfied, the late claim for priority under 35 U.S.C. § 120 and 365(c) is accepted as being unintentionally delayed.

The granting of the petition to accept the delayed benefit claim to the prior-filed application under 37 CFR 1.78(a)(3) should not be construed as meaning that the application is entitled to the benefit of the prior-filed application. In order for the application to be entitled to the benefit of the prior-filed application, all other requirements under 35 U.S.C. §§ 120 and 365(c) and 37 CFR 1.78(a)(1) and (a)(2) must be met. Similarly, the fact that the corrected Filing Receipt accompanying this decision on petition includes the prior-filed application should not be construed as meaning that applicant is entitled to the claim for benefit of priority to the prior-filed application noted thereon. Accordingly, the examiner will, in due course, consider this benefit claim and determine whether the application is entitled to the benefit of the earlier filing date.

A corrected Filing Receipt, which includes the priority claim to the prior-filed application, accompanies this decision on petition.

Any inquiries concerning this decision may be directed to David Bucci at (571) 272-7099. All other inquiries concerning either the examination procedures or status of the application should be directed to the Technology Center.

This application is being forwarded to the examiner of Technology Center Art Unit 3752 for appropriate action on the amendment filed April 28, 2006, including consideration of applicant's entitlement to claim benefit of priority under 35 U.S.C. § 120 and 365(c) to the above-noted, prior-filed PCT application.

David Bucci
Petitions Examiner
Office of Petitions

ATTACHMENT: Corrected Filing Receipt

UNITED STATES PATENT AND TRADEMARK OFFICE

UNITED STATES DEPARTMENT OF COMMERCE
United States Patent and Trademark Office
Address: COMMISSIONER FOR PATENTS
P.O. Box 1450
Alexandria, Virginia 22313-1450
www.uspto.gov

APPL NO.	FILING OR 371 (c) DATE	ART UNIT	FIL FEE REC'D	ATTY.DOCKET NO	DRAWINGS	TOT CLMS	IND CLMS
10/740,104	12/18/2003	3752	900	2001P13011WOUS	1	5	1

CONFIRMATION NO. 2397

CORRECTED FILING RECEIPT

OC000000022057819

46726
BSH HOME APPLIANCES CORPORATION
INTELLECTUAL PROPERTY DEPARTMENT
100 BOSCH BOULEVARD
NEW BERN, NC 28562

Date Mailed: 01/19/2007

Receipt is acknowledged of this regular Patent Application. It will be considered in its order and you will be notified as to the results of the examination. Be sure to provide the U.S. APPLICATION NUMBER, FILING DATE, NAME OF APPLICANT, and TITLE OF INVENTION when inquiring about this application. Fees transmitted by check or draft are subject to collection. Please verify the accuracy of the data presented on this receipt. **If an error is noted on this Filing Receipt, please mail to the Commissioner for Patents P.O. Box 1450 Alexandria Va 22313-1450. Please provide a copy of this Filing Receipt with the changes noted thereon. If you received a "Notice to File Missing Parts" for this application, please submit any corrections to this Filing Receipt with your reply to the Notice. When the USPTO processes the reply to the Notice, the USPTO will generate another Filing Receipt incorporating the requested corrections (if appropriate).**

Applicant(s)

Helmut Jerg, Giengen, GERMANY;

Assignment For Published Patent Application

BSH Bosch und Siemens Hausgerate GmbH, Munich, GERMANY

Power of Attorney: The patent practitioners associated with Customer Number **000046726**.

Domestic Priority data as claimed by applicant

This application is a CON of PCT/EP02/06471 06/12/2002

Foreign Applications

GERMANY 10130605.9 06/26/2001

If Required, Foreign Filing License Granted: 03/31/2004

The country code and number of your priority application, to be used for filing abroad under the Paris Convention, is US10/740,104

Projected Publication Date: Not Applicable

Non-Publication Request: No

Early Publication Request: No

Title

Fire protection and fire extinguishing device for domestic appliances

Preliminary Class

169

PROTECTING YOUR INVENTION OUTSIDE THE UNITED STATES

Since the rights granted by a U.S. patent extend only throughout the territory of the United States and have no effect in a foreign country, an inventor who wishes patent protection in another country must apply for a patent in a specific country or in regional patent offices. Applicants may wish to consider the filing of an international application under the Patent Cooperation Treaty (PCT). An international (PCT) application generally has the same effect as a regular national patent application in each PCT-member country. The PCT process **simplifies** the filing of patent applications on the same invention in member countries, but **does not result** in a grant of "an international patent" and does not eliminate the need of applicants to file additional documents and fees in countries where patent protection is desired.

Almost every country has its own patent law, and a person desiring a patent in a particular country must make an application for patent in that country in accordance with its particular laws. Since the laws of many countries differ in various respects from the patent law of the United States, applicants are advised to seek guidance from specific foreign countries to ensure that patent rights are not lost prematurely.

Applicants also are advised that in the case of inventions made in the United States, the Director of the USPTO must issue a license before applicants can apply for a patent in a foreign country. The filing of a U.S. patent application serves as a request for a foreign filing license. The application's filing receipt contains further information and guidance as to the status of applicant's license for foreign filing.

Applicants may wish to consult the USPTO booklet, "General Information Concerning Patents" (specifically, the section entitled "Treaties and Foreign Patents") for more information on timeframes and deadlines for filing foreign patent applications. The guide is available either by contacting the USPTO Contact Center at 800-786-9199, or it can be viewed on the USPTO website at http://www.uspto.gov/web/offices/pac/doc/general/index.html.

For information on preventing theft of your intellectual property (patents, trademarks and copyrights), you may wish to consult the U.S. Government website, http://www.stopfakes.gov. Part of a Department of Commerce initiative, this website includes self-help "toolkits" giving innovators guidance on how to protect intellectual property in specific countries such as China, Korea and Mexico. For questions regarding patent enforcement issues, applicants may call the U.S. Government hotline at 1-866-999-HALT (1-866-999-4158).

LICENSE FOR FOREIGN FILING UNDER
Title 35, United States Code, Section 184
Title 37, Code of Federal Regulations, 5.11 & 5.15

GRANTED

The applicant has been granted a license under 35 U.S.C. 184, if the phrase "IF REQUIRED, FOREIGN FILING LICENSE GRANTED" followed by a date appears on this form. Such licenses are issued in all applications where the conditions for issuance of a license have been met, regardless of whether or not a license may be required as set forth in 37 CFR 5.15. The scope and limitations of this license are set forth in 37 CFR 5.15(a) unless an earlier license has been issued under 37 CFR 5.15(b). The license is subject to revocation upon written notification. The date indicated is the effective date of the license, unless an earlier license of similar scope has been granted

under 37 CFR 5.13 or 5.14.

This license is to be retained by the licensee and may be used at any time on or after the effective date thereof unless it is revoked. This license is automatically transferred to any related applications(s) filed under 37 CFR 1.53(d). This license is not retroactive.

The grant of a license does not in any way lessen the responsibility of a licensee for the security of the subject matter as imposed by any Government contract or the provisions of existing laws relating to espionage and the national security or the export of technical data. Licensees should apprise themselves of current regulations especially with respect to certain countries, of other agencies, particularly the Office of Defense Trade Controls, Department of State (with respect to Arms, Munitions and Implements of War (22 CFR 121-128)); the Bureau of Industry and Security, Department of Commerce (15 CFR parts 730-774); the Office of Foreign Assets Control, Department of Treasury (31 CFR Parts 500+) and the Department of Energy.

NOT GRANTED

No license under 35 U.S.C. 184 has been granted at this time, if the phrase "IF REQUIRED, FOREIGN FILING LICENSE GRANTED" DOES NOT appear on this form. Applicant may still petition for a license under 37 CFR 5.12, if a license is desired before the expiration of 6 months from the filing date of the application. If 6 months has lapsed from the filing date of this application and the licensee has not received any indication of a secrecy order under 35 U.S.C. 181, the licensee may foreign file the application pursuant to 37 CFR 5.15(b).

UNITED STATES PATENT AND TRADEMARK OFFICE

Commissioner for Patents
United States Patent and Trademark Office
P.O. Box 1450
Alexandria, VA 22313-1450
www.uspto.gov

BAKER BOTTS L.L.P.
2001 ROSS AVENUE
SUITE 600
DALLAS TX 75201-2980

COPY MAILED

JUL 08 2008

OFFICE OF PETITIONS

In re Application of Dittmar :
Application No. 10/740,108 : Decision on Petition
Filing Date: December 17, 2003 :
Attorney Docket No. 064731.0410 :

This is a decision on the petition filed March 18, 2008, under 37 CFR 1.181 to withdraw the holding of abandonment of the above-identified application.

The petition is **dismissed.**

Any request for reconsideration must be submitted within TWO (2) MONTHS from the mail date of this decision. No further petition fee is required for the request. Extensions of time under 37 CFR 1.136(a) are NOT permitted. The reconsideration request should include a cover letter entitled "Renewed Petition under 37 CFR 1.181."

Facts:

The Office issued a non-final Office action on July 2, 2007. Email notification of the non-final Office action was sent on July 7, 2007. The email notification stated,

> Dear PAIR Customer:
>
> The following USPTO patent application(s) ... have new outgoing correspondence. This correspondence is now available for viewing in Private PAIR....

Application	Attorney Docket No.
[1][1]	062891.0616
[2]	063170.7002
[3]	063170.6875

[1] Nine of the ten application numbers in the email are not listed in order to limit the disclosure of information pertaining to other specific applications within the instant decision. The attorney docket numbers should allow petitioner to readily identify the other applications.

[4]	063170.6750
[5]	067543.0179
[6]	017575.0749
10740108	064731.0410
[8]	074470.0114
[9]	063170.3986 (20050032)
[10]	062891.1812

Office records indicate 9 of the 10 application numbers listed in the email were reviewed via Private PAIR on July 10, 2007. The only application in the email that was not reviewed in Private PAIR on July 10, 2007, is the instant application.

On July 15, 2007, the Office mailed a courtesy reminder postcard to remind petitioner correspondence in the form of an email had been sent to petitioner's email address for the instant application.

Petitioner did not file a reply to the July 2, 2007. As a result, a Notice of Abandonment was issued February 6, 2007. Email notification of the Notice of Abandonment was sent February 7, 2007.

Petitioner requests withdrawal of the holding of abandonment based on non-receipt of notification of the non-final Office action.

Discussion:

The evidence provided by petitioner is insufficient to prove non-receipt of the July 7, 2007 email notification. The fact petitioner reviewed 9 of the 10 applications in PAIR on July 10, 2007, indicates a high likelihood petitioner received the email notification listing the 10 applications.

Petitioner may wish to consider filing a petition to revive based on unintentional abandonment under 37 CFR 1.137(b). A grantable petition pursuant to 37 CFR 1.137(b) must be accompanied by the required reply to the outstanding non-final Office action, the required petition fee ($1,540 for a large entity), and a statement that the **entire** delay in filing the required reply from the due date for the reply until the filing of a grantable petition pursuant to 37 CFR 1.137(b) was unintentional.

A copy of a blank PDF "fillable" version of a petition under 37 CFR 1.137(b) form can be found at: "http://www.uspto.gov/web/forms/sb0064_fill.pdf".

Unless filed by EFS Web, any further correspondence with respect to this matter should be addressed as follows:

By mail: Mail Stop Petition
Commissioner for Patents
P.O. Box 1450
Alexandria, VA 22313-1450

By facsimile: (571) 273-8300
Attn: Office of Petitions

By hand: U.S. Patent and Trademark Office
Customer Service Window
Randolph Building
401 Dulany Street
Alexandria, VA 22314

Telephone inquiries regarding this communication should be directed to Petitions Attorney Steven Brantley at (571) 272-3203.

Charles Steven Brantley
Senior Petitions Attorney
Office of Petitions

UNITED STATES PATENT AND TRADEMARK OFFICE

Commissioner for Patents
United States Patent and Trademark Office
P.O. Box 1450
Alexandria, VA 22313-1450
www.uspto.gov

BAKER BOTTS L.L.P.
2001 ROSS AVENUE
SUITE 600
DALLAS TX 75201-2980

COPY MAILED

JAN 16 2009

OFFICE OF PETITIONS

In re Application of Dittmar :
Application No. 10/740,108 : Decision on Petition
Filing Date: December 17, 2003 :
Attorney Docket No. 064731.0410 :

This is a decision on the petition under 37 CFR 1.137(a), filed September 8, 2008, to revive the above-identified application.

The petition is **granted**.

The Office issued a non-final Office action on July 2, 2007. Email notification of the non-final Office action was sent on July 7, 2007. Petitioner did not file a reply to the July 2, 2007. As a result, a Notice of Abandonment was issued February 6, 2007. Email notification of the Notice of Abandonment was sent February 7, 2007.

The instant petition seeks revival of the application.

A delay resulting from an error, such as a typographical error or docketing error, on the part of an employee in the performance of a clerical function may provide the basis for a showing of "unavoidable" delay. In the instant case, petitioner has provided a showing sufficient to demonstrate unavoidable delay resulting from a clerical error.

Petitioner has met the requirements to revive the above-identified application pursuant to 37 CFR 1.137(a). Therefore, the petition is granted.

Technology Center Art Unit 2617 will be informed of the instant decision and the application, including the amendment and terminal disclaimer filed September 8, 2008, will be further examined in due course.

Telephone inquiries regarding this communication should be directed to Petitions Attorney Steven Brantley at (571) 272-3203.

Charles Steven Brantley
Senior Petitions Attorney
Office of Petitions

UNITED STATES PATENT AND TRADEMARK OFFICE

Commissioner for Patents
United States Patent and Trademark Office
P.O. Box 1450
Alexandria, VA 22313-1450
www.uspto.gov

MICHAEL J. LABRIE
MCAFEE & TAFT
TWO LEADERSHIP SQUARE, TENTH FLOOR
211 NORTH ROBINSON
OKLAHOMA CITY, OK 73102

COPY MAILED

JUL 19 2006

OFFICE OF PETITIONS

In re Application of	:	
Dyer et al.	:	DECISION ON PETITION
Application No. 10/740,110	:	TO MAKE SPECIAL
Filed: December 17, 2003	:	37 CFR1.102(D)
Attorney Docket No. 39120.2	:	

This is a decision on the petition under 37 CFR 1.102(c)(1), filed May 30, 2006, to make the above-identified application special based on applicant's age as set forth in M.P.E.P. § 708.02, Section IV.

The petition is **DISMISSED**.

A grantable petition to make an application special under 37 CFR 1.102(c)(1) and MPEP § 708.02, Section IV: Applicant's Age, must be accompanied by evidence showing that at least one of the applicants is 65 years of age, or more, such as a birth certificate or a statement by applicant. No fee is required.

The Declaration from Jack V.C. Hough provided with the instant petition contains conflicting information. The statement, "The applicant ... hereby states that he is 85 years of age, having been born on *September 12, 1990*." It seems that the date of birth may be incorrect. Petitioner may wish to submit a new Declaration from the applicant, or a driver's license or birth certificate, with a proper date of birth.

Further correspondence with respect to this matter should be addressed as follows:

By Mail:	Mail Stop PETITION Commissioner for Patents P. O. Box 1450 Alexandria, VA 22313-1450
By hand:	U. S. Patent and Trademark Office Customer Service Window, Mail Stop Petitions Randolph Building 401 Dulany Street Alexandria, VA 22314
By FAX:	(571) 273-8300

Telephone inquiries concerning this decision should be directed to the undersigned at 571-272-3206. All other inquiries concerning either the examination or status of the application should be directed to the Technology Center.

This matter is being referred to the Technology Center Art Unit 1618 for action in its regular turn.

Liana Chase
Petitions Examiner
Office of Petitions

UNITED STATES PATENT AND TRADEMARK OFFICE

Commissioner for Patents
United States Patent and Trademark Office
P.O. Box 1450
Alexandria, VA 22313-1450
www.uspto.gov

MICHAEL J. LABRIE
MCAFEE & TAFT
TWO LEADERSHIP SQUARE, TENTH FLOOR
211 NORTH ROBINSON
OKLAHOMA CITY, OK 73102

COPY MAILED

FEB 0 2 2007

OFFICE OF PETITIONS

In re Application of :
Dyer et al. :
Application No. 10/740,110 : ON PETITION
Filed: December 17, 2003 :
Attorney Docket No. 39120.2 :

This is a decision on the renewed petition under 37 CFR 1.102(c)(1), filed February 1, 2007, to make the above-identified application special based on applicant's age as set forth in M.P.E.P. § 708.02, Section IV.

The petition is **GRANTED**.

A grantable petition to make an application special under 37 CFR 1.102(c)(1) and MPEP § 708.02, Section IV: Applicant's Age must be accompanied by evidence showing that at least one of the applicants is 65 years of age, or more, such as a birth certificate or a statement by applicant. No fee is required.

The instant petition includes a Declaration from the applicant, Jack V.D. Hough, stating, "that he is 85 years of age, having been born on September 12, 1920." Accordingly, the above-identified application has been accorded "special" status.

Telephone inquiries concerning this decision should be directed to the undersigned at 571-272-3206. All other inquiries concerning either the examination or status of the application should be directed to the Technology Center.

This matter is being referred to the Technology Center Art Unit 1618 for action on the merits commensurate with this decision.

Liana Walsh
Petitions Examiner
Office of Petitions

UNITED STATES PATENT AND TRADEMARK OFFICE

Commissioner for Patents
United States Patent and Trademark Office
PO BOX 1450
ALEXANDRIA, VA 22313-1450
www.uspto.gov

DUANE MORRIS LLP
PO BOX 5203
PRINCETON NJ 08543-5203

COPY MAILED

OCT 0 7 2004

OFFICE OF PETITIONS

In re Application of :
Neil Evan Goodzeit : DECISION DISMISSING
Application No. 10/740,129 : PETITION
Filed: December 18, 2003 :
Attorney Docket No. 80PC3657 DIV :

This is a decision on the petition under 37 CFR 1.182, filed May 7, 2004, requesting that the application be accorded a filing date of December 18, 2003, with Figures 5a and 5b as part of the original disclosure.

On December 18, 2003, the above-identified application was filed. However, on March 31, 2004, the Office of Initial Patent Examination mailed a Notice of Omitted Item(s) in a Nonprovisional Application, stating that the application had been accorded a filing date of December 18, 2003, and indicating that Figures 5a and 5b described in the specification appeared to have been omitted.

In response, on May 7, 2004, applicant filed the present petition, the petition fee, and seven sheets of drawings including Figures 5a and 5b.

It is obvious from the petition that Figure 5a was not actually missing on December 18, 2003. Rather, the drawing of Figure 5a was simply mislabeled Figure 5 as a result of applicant's filing error.

However, Figure 5b cannot be granted the filing date of December 18, 2003, as part of the original disclosure because it was not present on filing. Nonetheless, in view of the incorporation by reference of the prior application, applicant may file an amendment to the examiner to include Figure 5b without a petition. See MPEP 201.06(c)

Accordingly, the Notice of Omitted Item(s) mailed March 31, 2004, was correct in stating that Figures 5a and 5b described in the specification appeared to have been omitted. Therefore, the

requirement to submit the omitted figures set forth in the Notice of Omitted Item(s) will not be withdrawn.

Accordingly, the petition is dismissed.

A preliminary amendment adding the label "FIG. 5a" to the mislabeled drawing figure and requesting entry of Figure 5b should be filed prior to the first action on the merits.

The Office will not refund the $130.00 petition fee because the present petition was not necessitated by any error on the part of the United States Patent and Trademark Office.

The Office of Initial Patent Examination is directed to process the application with a filing date of December 18, 2003, using only the drawings filed on that date.

Any inquiries related to this decision should be directed to the undersigned at (703) 306-5589.

Christina Tartera Donnell

Christina Tartera Donnell
Petitions Attorney
Office of Petitions

UNITED STATES PATENT AND TRADEMARK OFFICE

Commissioner for Patents
United States Patent and Trademark Office
PO BOX 1450
ALEXANDRIA, VA 22313-1450
www.uspto.gov

OCT 28 2004
U.S. PATENT & TRADEMARK OFFICE

DUANE MORRIS LLP
PO BOX 5203
PRINCETON NJ 08543-5203

COPY MAILED

OCT 07 2004

OFFICE OF PETITIONS

In re Application of	:	
Neil Evan Goodzeit	:	DECISION DISMISSING
Application No. 10/740,129	:	PETITION
Filed: December 18, 2003	:	
Attorney Docket No. 80PC3657 DIV	:	

This is a decision on the petition under 37 CFR 1.182, filed May 7, 2004, requesting that the application be accorded a filing date of December 18, 2003, with Figures 5a and 5b as part of the original disclosure.

On December 18, 2003, the above-identified application was filed. However, on March 31, 2004, the Office of Initial Patent Examination mailed a Notice of Omitted Item(s) in a Nonprovisional Application, stating that the application had been accorded a filing date of December 18, 2003, and indicating that Figures 5a and 5b described in the specification appeared to have been omitted.

In response, on May 7, 2004, applicant filed the present petition, the petition fee, and seven sheets of drawings including Figures 5a and 5b.

It is obvious from the petition that Figure 5a was not actually missing on December 18, 2003. Rather, the drawing of Figure 5a was simply mislabeled Figure 5 as a result of applicant's filing error.

However, Figure 5b cannot be granted the filing date of December 18, 2003, as part of the original disclosure because it was not present on filing. Nonetheless, in view of the incorporation by reference of the prior application, applicant may file an amendment to the examiner to include Figure 5b without a petition. See MPEP 201.06(c)

Accordingly, the Notice of Omitted Item(s) mailed March 31, 2004, was correct in stating that Figures 5a and 5b described in the specification appeared to have been omitted. Therefore, the

requirement to submit the omitted figures set forth in the Notice of Omitted Item(s) will not be withdrawn.

Accordingly, the petition is dismissed.

A preliminary amendment adding the label "FIG. 5a" to the mislabeled drawing figure and requesting entry of Figure 5b should be filed prior to the first action on the merits.

The Office will not refund the $130.00 petition fee because the present petition was not necessitated by any error on the part of the United States Patent and Trademark Office.

The Office of Initial Patent Examination is directed to process the application with a filing date of December 18, 2003, using only the drawings filed on that date.

Any inquiries related to this decision should be directed to the undersigned at (703) 306-5589.

Christina Tartera Donnell

Christina Tartera Donnell
Petitions Attorney
Office of Petitions

UNITED STATES PATENT AND TRADEMARK OFFICE

Commissioner for Patents
United States Patent and Trademark Office
P.O. Box 1450
Alexandria, VA 22313-1450
www.uspto.gov

FISH & RICHARDSON, PC
12390 EL CAMINO REAL
SAN DIEGO CA 92130-2081

COPY MAILED

SEP 15 2005

OFFICE OF PETITIONS

In re Application of :
Woolston . :
Application No. 10/740,151 : DECISION ON PETITION
Filed: December 17, 2003 :
Docket No.:13466-002015 :

This is a decision on the petition under 37 CFR 1.59 filed June 22, 2005, which is being treated as a petition requesting closure of the document filed by a third party on April 22, 2005.

The petition is granted.

Petitioner requests that the above-mentioned communication filed by eBay be expunged and its contents be disregarded in this Image file Wrapper (IFW) case.

Inspection of USPTO records for this application reveals that it was published as pre-grant publication no. US20040133512A1 on July 8, 2004. Accordingly, for the contested third party communication filed April 22, 2005, to be entered, much less remain in this application record, the controlling regulations, 37 CFR §§ 1.99 or 1.291, must be satisfied.

While self-styled as a petition under 37 CFR 1.182, a cursory review of the eBay communication reveals that it requests that the USPTO take notice of its prior findings alleged to have been arrived at during the course of prosecution of 18 related (common inventorship) patent applications, and that the USPTO apply these findings consistently in the examination of the instant non provisional application. These findings are discussed in conjunction with, *inter alia*, at least 2 specifically mentioned U.S. Patents (the latest of which issued September 2, 1997) , several prior art articles (the latest of which dates from 1995), and assertions as to what the USPTO has held to be well known in the art during the examination of the prior applications. As such, the contested communication may be considered to be either a citation of prior art within the meaning of 37 CFR 1.99, or a protest within the meaning of 37 CFR 1.291, to the issuance of a patent to the instant application.

§ 1.99(d) states that any submission under this section shall not include any explanation of the patents, publications, or other information, and if such is included the USPTO will not enter the submission. While petitioner contends the submission occupies some 53 pages, the document actually subtends some 101 pages herein. Furthermore, the explanation pertaining to the two U.S. patents alone occupies, according to the table of contents, pages 14 through 29; the prior art publications occupies, according to the table of contents, pages 30 through 35, and, of course, the remaining pages of the submission constitute the other information. Facially,

therefore, the eBay submission contains an extensive explanation of the patents, prior art, and other information, that simply does not comply with § 1.99(d), which prohibits any explanation. Further, the submission facially is untimely within the meaning of § 1.99(e), and given the publication dates of the aforementioned patents and prior art, could clearly have been submitted to the USPTO earlier. Thus, retention of the eBAy protest in this published application file is inconsistent with 37 CFR 1.99.

While 37 CFR 1.291 is more liberal that §1.99(d) in permitting a "concise" explanation of the information relied on, as opposed to precluding any explanation, the protest was untimely filed i.e., filed after publication. Nevertheless it lacks the permission of applicant required by § 1.291(b)(1) for consideration of a protest filed after publication containing even a "concise" explanation. As the eBay protest is facially not concise, and as it lacks, given the instant petition, any semblance of the applicant's written approval, its retention is likewise prohibited under § 1.291. This is particularly so as Congress expressly wrote a statutory prohibition of protests in published applications in 35 U.S.C. § 122(b) in the absence of the express written permission of the applicant.

Accordingly, for the reasons given above, it has been established to the satisfaction of the Director that expungement of the eBay protest is appropriate. The file entry for this document has been closed and as such the document is no longer available to the public for inspection, which is the IFW equivalent to removal of a paper document from a paper file wrapper.

The $70 balance owed (for a total of $200) for the petition has been charged to counsel's deposit account.

This application is being referred to the TC for examination in due course

Any inquiries concerning this communication may be directed to the undersigned at (571) 272-3217.

Brian Hearn

Brian Hearn
Petitions Examiner
Office of Petitions

UNITED STATES PATENT AND TRADEMARK OFFICE

Commissioner for Patents
United States Patent and Trademark Office
P.O. Box 1450
Alexandria, VA 22313-1450
www.uspto.gov

OCT 0 1 2009

Fish & Richardson P.C.
P.O. Box 1022
Minneapolis, MN 55440-1022

In re Application of	:	DECISION ON PETITION
John McDonough et al.	:	TO WITHDRAW FINALITY
Application No. 10/740,159	:	OF AN OFFICE ACTION
Filed: December 17, 2003	:	UNDER 37 CFR 1.181
For: ASSET PLANNING AND TRACKING	:	

This is in response to appellant's Petition for Supervisory Review received February 2, 2009 requesting a withdrawal of finality of the Final Office action mailed January 22, 2009.

The petition is **DISMISSED AS MOOT.**

A review of the record indicates that the examiner prepared an office action which finally rejected claims 1-42; the office action was mailed on January 22, 2009. Appellant responded on February 2, 2009 with a Rule 1.181 Petition requesting withdrawal of finality of the office action.

Appellant contends that these claims were rejected as obvious by a combination of references, but that the examiner did not point to locations in the prior art cited where specific limitations could be found. Appellant cites Rule 1.104(b) as authority for a requirement that limitations be particularly cited in prior art relied upon in a rejection and asserts that the rejection is not complete as required by Rule 1.104. For this reason, Appellant requests withdrawal of finality of the January 22, 2009 office action and issuance of a new office action that clearly identifies where in the references the limitations are to be found.

After reviewing Appellant's comments, the examiner prepared a non-final office action withdrawing finality which was mailed on June 10, 2009. As the examiner has complied with Appellant's request for withdrawal of finality of the January 22, 2009 office action, the Petition is **DISMISSED AS MOOT.**

Wynn Coggins, Director
Patent Technology Center 3600
(571) 272-5350

SNM/crk: 09/29/2009

SM

SPE RESPONSE FOR CERTIFICATE OF CORRECTION

Paper No.: _____

DATE : 07/05/06

TO SPE OF : ART UNIT 3673

SUBJECT : Request for Certificate of Correction for Appl. No.: **10/740169** Patent No.: **6978500**

Please respond to this request for a certificate of correction within 7 days.

Please review the requested changes/corrections as shown in the **COCIN** document(s) in the IFW application image. No new matter should be introduced, nor should the scope or meaning of the claims be changed.

Please complete the response (see below) and forward the completed response to scanning using document code **COCX**.

Angela Green
Certificates of Correction Branch
703.308.9380 ext. 103

Thank You For Your Assistance

The request for issuing the above-identified correction(s) is hereby:

Note your decision on the appropriate box.

- ☒ **Approved** — **All** changes apply.
- ☐ **Approved in Part** — Specify below which changes **do not** apply.
- ☐ **Denied** — State the reasons for denial below.

Comments: _____

_____

_____

_____

_____

SPE 3673 Art Unit

UNITED STATES PATENT AND TRADEMARK OFFICE

UNITED STATES DEPARTMENT OF COMMERCE
United States Patent and Trademark Office
Address: COMMISSIONER FOR PATENTS
P.O. Box 1450
Alexandria, Virginia 22313-1450
www.uspto.gov

SCHWEGMAN, LUNDBERG & WOESSNER, P.A.
P.O. BOX 2938
MINNEAPOLIS, MN 55402

Mail Date: 04/20/2010

Applicant	: Alexander A. Maltsev	: DECISION ON REQUEST FOR
Patent Number	: 7570695	: RECALCULATION of PATENT
Issue Date	: 08/04/2009	: TERM ADJUSTMENT IN VIEW
Appliction No	: 10/740,170	: OF WYETH AND NOTICE OF INTENT TO
Filed	: 12/18/2003	: ISSUE CERTIFICATE OF CORRECTION
		:

The Request for Recalculation is **GRANTED** to the extent indicated.

The patent term adjustment has been determined to be **1562** days. The USPTO will *sua sponte* issue a certificate of correction reflecting the amount of PTA days determined by the recalculation.

Prior to the issuance of the certificate of correction, the USPTO will afford patentee an opportunity to be heard and request reconsideration. Accordingly, patentee has **one month or thirty (30) days**, whichever is longer, to file a request for reconsideration of this patent term adjustment calculation. See 35 U.S.C. 154(b)(3)(B)(ii) and 37 CFR 1.322(a)(4). No extensions of time will be granted under 37 CFR 1.136.

Patentee should use document code PET.OP if electronically filing a request for reconsideration of this patent term adjustment calculation. The patentee must also include the information required by 37 CFR 1.705(b)(2) and the fee required by 37 CFR 1.18(e). If patentee does not file a timely request for reconsideration of this patent term adjustment calculation including the information required by 37 CFR 1.705(b)(2) and the fee required by 37 CFR 1.18(e), the USPTO will issue a certificate of correction reflecting the PTA determination noted above.

Patentee should be aware that in order to preserve the right to review in the United States District Court for the District of Columbia of the USPTO patent term adjustment determination, patentee must ensure that he or she also take the steps required under 35 U.S.C. 154(b)(4)(A) in a timely manner. Nothing in the request for recalculation should be construed as providing an alternative time frame for commencing a civil action under 35 U.S.C. 154(b)(4)(A).

Any questions concerning this decision should be directed to the Office of Patent Legal Administration at 571-272-7702.

UNITED STATES PATENT AND TRADEMARK OFFICE

Commissioner for Patents
United States Patent and Trademark Office
P.O. Box 1450
Alexandria, VA 22313-1450
www.uspto.gov

CRAIG W. RODDY
HALLIBURTON ENERGY SERVICES
P.O. BOX 1431
DUNCAN OK 73536-0440

COPY MAILED
APR 10 2006
OFFICE OF PETITIONS

In re Application of	:	
Chatterji et al.	:	
Application No. 10/740,189	:	ON PETITION
Filed: December 18, 2003	:	
Attorney Docket No. HES 2003-IP-009903U1P1	:	

This is a decision on the petition under 37 CFR 1.102(c)(1), filed December 18, 2003, to make the above-identified application special based on applicant's age as set forth in M.P.E.P. § 708.02, Section IV.

The petition is **GRANTED**.

A grantable petition to make an application special under 37 CFR 1.102(c)(1) and MPEP § 708.02, Section IV: Applicant's Age must be accompanied by evidence showing that at least one of the applicants is 65 years of age, or more, such as a birth certificate or a statement by applicant. No fee is required.

The instant petition includes a statement signed by the applicant. Accordingly, the above-identified application has been accorded "special" status.

Telephone inquiries concerning this decision should be directed to the undersigned at 571-272-3206.

All other inquiries concerning either the examination or status of the application should be directed to the Technology Center.

This matter is being referred to the Technology Center Art Unit 3676 for action on the merits commensurate with this decision.

Liana Chase
Petitions Examiner
Office of Petitions

UNITED STATES PATENT AND TRADEMARK OFFICE

Commissioner for Patents
United States Patent and Trademark Office
P.O. Box 1450
Alexandria, VA 22313-1450
www.uspto.gov
DIW Dec-06

SCHLUMBERGER-DOLL RESEARCH
ATTN: INTELLECTUAL PROPERTY LAW DEPARTMENT
P.O. BOX 425045
CAMBRIDGE MA 02142

COPY MAILED
DEC 13 2006
OFFICE OF PETITIONS

In re Application of	:	
Salamitou et al.	:	
Application No. 10/740211	:	DECISION ON PETITION
Filed: 12/18/2003	:	
Attorney Docket No.	:	
60.1510/1546-CIP	:	

This is a decision on the petition filed on 5 October, 2006, under 37 CFR 1.137(b),[1] to revive the above-identified application.

The petition is **GRANTED**.

The application became abandoned on 6 August, 2006, for failure to timely submit the issue and publication fees as required by

---

[1] Effective December 1, 1997, the provisions of 37 CFR 1.137(b) now provide that where the delay in reply was unintentional, a petition may be filed to revive an abandoned application or a lapsed patent pursuant to 37 CFR 1.137(b). A grantable petition filed under the provisions of 37 CFR 1.137(b) must be accompanied by:

(1) the required reply, unless previously filed. In a nonprovisional application abandoned for failure to prosecute, the required reply may be met by the filing of a continuing application. In a nonprovisional utility or plant application filed on or after June 8, 1995, and abandoned for failure to prosecute, the required reply may also be met by the filing of a request for continuing examination in compliance with § 1.114. In an application or patent, abandoned or lapsed for failure to pay the issue fee or any portion thereof, the required reply must be the payment of the issue fee or any outstanding balance thereof. In an application, abandoned for failure to pay the publication fee, the required reply must include payment of the publication fee.

(2) the petition fee as set forth in 37 CFR 1.17(m);

(3) a statement that the entire delay in filing the required reply from the due date for the reply until the filing of a grantable petition pursuant to 37 CFR 1.137(b) was unintentional. The Commissioner may required additional information where there is a question whether the delay was unintentional; and

(4) any terminal disclaimer (and fee as set forth in 37 CFR 1.20(d)) required pursuant to 37 CFR 1.137(c)).

the Notice of Allowance and Fee(s) Due mailed on 5 May, 2006, which set a three (3) month statutory period for reply. Notice of Abandonment was mailed on 7 September, 2006.

The issue and publication fees will be charged to counsel's deposit account, as authorized in the fee transmittal sheet filed with the petition.

The application is being referred to the Publishing Division for processing into a patent.

Telephone inquiries concerning this matter may be directed to the undersigned at (571)272-3231.

Douglas I. Wood
Senior Petitions Attorney
Office of Petitions

United States
Patent And
Trademark Office

P.O. Box 1450, Alexandria, Virginia 22313-1450 – www.uspto.gov

PETITION DECISION

04/02/04

Weingarten, Schurgin, Gagnebin & Lebovici LLP
Ten Post Office Square
Boston, MA 02109

Dear Applicant:

The Box PG Pub replacement drawings for application number 10/740237 received on 01/09/04 by the U. S. Patent and Trademark Office will be included for patent publication.

Telephone inquiries should be directed to Kaletus King, Office of Pre-Grant Publication 703 605-4283.

Kaletus King

Signature of Reviewer, Office of Pre-Grant Publication

SPE RESPONSE FOR CERTIFICATE OF CORRECTION

Paper No.: _____

DATE : 02/08/10

TO SPE OF : ART UNIT 2823

SUBJECT : Request for Certificate of Correction for Appl. No 10/740241.: 7257466 B2

Please respond to this request for a certificate of correction within 7 days.

FOR IFW FILES:

Please review the requested changes/corrections as shown in the **COCIN** document(s) in the IFW application image. No new matter should be introduced, nor should the scope or meaning of the claims be changed.

Please complete the response (see below) and forward the completed response to scanning using document code **COCX**.

FOR PAPER FILES:

Please review the requested changes/corrections as shown in the attached certificate of correction. Please complete this form (see below) and forward it with the file to:

Certificates of Correction Branch (CofC)

Should the change(s) Be made?

RoChaun Johnson
Certificates of Correction Branch
571 272-0470

Thank You For Your Assistance

The request for issuing the above-identified correction(s) is hereby:
Note your decision on the appropriate box.

- ➢ **Approved** — **All** changes apply.
- ☐ **Approved in Part** — Specify below which changes **do not** apply.
- ☐ **Denied** — State the reasons for denial below.

Comments: The changes as requested by the applicant are approved. No new matter has been inserted and the changes merely correct typographical errors._____

_____

_____

_____

/Matthew S. Smith/
SPE

2823
Art Unit

UNITED STATES PATENT AND TRADEMARK OFFICE

UNITED STATES DEPARTMENT OF COMMERCE
United States Patent and Trademark Office
Address: COMMISSIONER FOR PATENTS
P.O. Box 1450
Alexandria, Virginia 22313-1450
www.uspto.gov

VOLPE AND KOENIG, P.C.
DEPT. ICC
UNITED PLAZA, SUITE 1600
30 SOUTH 17TH STREET
PHILADELPHIA, PA 19103

Mail Date: 04/26/2010

Applicant	: Marian Rudolf	: DECISION ON REQUEST FOR
Patent Number	: 7586874	: RECALCULATION of PATENT
Issue Date	: 09/08/2009	: TERM ADJUSTMENT IN VIEW
Application No	: 10/740,259	: OF WYETH AND NOTICE OF INTENT TO
Filed	: 12/18/2003	: ISSUE CERTIFICATE OF CORRECTION
		:

The Request for Recalculation is **GRANTED** to the extent indicated.

The patent term adjustment has been determined to be **1073** days. The USPTO will *sua sponte* issue a certificate of correction reflecting the amount of PTA days determined by the recalculation.

Prior to the issuance of the certificate of correction, the USPTO will afford patentee an opportunity to be heard and request reconsideration. Accordingly, patentee has **one month or thirty (30) days**, whichever is longer, to file a request for reconsideration of this patent term adjustment calculation. See 35 U.S.C. 154(b)(3)(B)(ii) and 37 CFR 1.322(a)(4). No extensions of time will be granted under 37 CFR 1.136.

Patentee should use document code PET.OP if electronically filing a request for reconsideration of this patent term adjustment calculation. The patentee must also include the information required by 37 CFR 1.705(b)(2) and the fee required by 37 CFR 1.18(e). If patentee does not file a timely request for reconsideration of this patent term adjustment calculation including the information required by 37 CFR 1.705(b)(2) and the fee required by 37 CFR 1.18(e), the USPTO will issue a certificate of correction reflecting the PTA determination noted above.

Patentee should be aware that in order to preserve the right to review in the United States District Court for the District of Columbia of the USPTO patent term adjustment determination, patentee must ensure that he or she also take the steps required under 35 U.S.C. 154(b)(4)(A) in a timely manner. Nothing in the request for recalculation should be construed as providing an alternative time frame for commencing a civil action under 35 U.S.C. 154(b)(4)(A).

Any questions concerning this decision should be directed to the Office of Patent Legal Administration at 571-272-7702.

UNITED STATES PATENT AND TRADEMARK OFFICE

COMMISSIONER FOR PATENTS
UNITED STATES PATENT AND TRADEMARK OFFICE
P.O. BOX 1450
ALEXANDRIA, VA 22313-1450
WWW.USPTO.GOV

Paper No. None

Thomas Hoxie (Hoxie & Tso LLP)
374 Millburn Avenue
Suite 300 E
Millburn NJ 07041

COPY MAILED

MAR 13 2006

OFFICE OF PETITIONS

In re Application of :
Maria Dolors Fernandez Forner :
et al. :
Application No. 10/740,264 :
Filed: December 17, 2003 : DECISION ON PETITION
Attorney Docket No. : UNDER 37 C.F.R. §1.181(A)
251502007410 :
Title: QUINUCLIDINE DERIVATIVES :
AND MEDICINAL COMPOSITIONS :
CONTAINING THE SAME :

This is a decision on the petition under 37 C.F.R. §1.181(a) to withdraw the holding of abandonment, filed on December 5, 2005.

The above-identified application became abandoned for failure to submit the issue fee in a timely manner in reply to the Notice of Allowability, mailed March 30, 2005, which set a shortened statutory period for reply of three (3) months. No extensions of time are permitted for transmitting issue fees[1]. Accordingly, the above-identified application became abandoned on July 1, 2005. A notice of abandonment was mailed on November 21, 2005.

With the present petition, Petitioner has alleged that the notice of allowability and issue fee due was not received.

Considering the facts and circumstances of the delay at issue, as set forth on petition, it is concluded that Petitioner has met his burden of establishing that the correspondence in question was not received.

1 See MPEP §710.02(e).

Accordingly, the petition under 37 C.F.R. §1.181(a) is **GRANTED**. The holding of abandonment is **WITHDRAWN**.

Technology Center 1600 will be notified of this decision, so that the notice of allowability and issue fee due can be mailed and the period for reply can be restarted.

Telephone inquiries regarding *this decision* should be directed to the undersigned at (571) 272-3225. All other inquiries concerning examination procedures or status of the application should be directed to the Technology Center.

Paul Shanoski
Senior Attorney
Office of Petitions
United States Patent and Trademark Office

UNITED STATES PATENT AND TRADEMARK OFFICE

Commissioner for Patents
United States Patent and Trademark Office
P.O. Box 1450
Alexandria, VA 22313-1450
www.uspto.gov

BP AMERICA INC.
DOCKET CLERK
BP LEGAL, M.C. 5-EAST
4101 WINFIELD ROAD
WARRENVILLE, IL 60555

COPY MAILED

DEC 14 2007

OFFICE OF PETITIONS

In re Application of :
Rian REYNEKE, et al :
Application No. 10/740,273 : DECISION ON PETITION
Filed: December 18, 2003 :
Attorney Docket No. 37405 :

This is a decision on the petition under the unintentional provisions of 37 CFR 1.137(b), filed September 21, 2007, to revive the above-identified application.

The petition is **GRANTED**.

The application became abandoned for failure to reply in a timely manner to the non-final Office action mailed, December 13, 2006, which set a shortened statutory period for reply of three (3) months. No extensions of time under the provisions of 37 CFR 1.136(a) were obtained. Accordingly, the application became abandoned on March 14, 2007.

The petition satisfies the requirements of 37 CFR 1.137(b) in that petitioner has supplied (1) the reply in the form of an amendment, (2) the petition fee of $1500; and (3) an adequate statement of unintentional delay.

It is not apparent whether the person signing the statement of unintentional delay was in a position to have firsthand or direct knowledge of the facts and circumstances of the delay at issue. Nevertheless, such statement is being treated as having been made as the result of a reasonable inquiry into the facts and circumstances of such delay. See 37 CFR 10.18(b) and Changes to Patent Practice and Procedure; Final Rule Notice, 62 Fed. Reg. 53131, 53178 (October 10, 1997), 1203 Off. Gaz. Pat. Office 63, 103 (October 21, 1997). In the event that such an inquiry has not been made, petitioner must make such an inquiry. If such inquiry results in the discovery that it is not correct that the entire delay in filing the required reply from the due date for the reply until the filing of a grantable petition pursuant to 37 CFR 1.137(b) was unintentional, petitioner must notify the Office.

The person signing the petition requests a change of correspondence address to the address given in the petition. There is, however, no indication that the person signing the petition was ever given a power of attorney to prosecute the application. If the person signing the petition desires to receive future correspondence regarding this application, the appropriate power of attorney documents must be submitted. While a courtesy copy of this decision is being mailed to the person signing the petition, all future correspondence will be directed to the address currently of record until appropriate instructions are received.

Telephone inquiries concerning this decision should be directed to Diane Goodwyn at (571) 272-6735.

This application is being referred to Technology Center AU 1764 for appropriate action by the Examiner in the normal course of business on the reply received September 21, 2007.

April Wise
Petitions Examiner
Office of Petitions

cc: DAVID P. YUSKO
INEOS USA LLC
3030 WARRENVILLE RD., S/650
LISLE, IL 60532

UNITED STATES PATENT AND TRADEMARK OFFICE

COMMISSIONER FOR PATENTS
UNITED STATES PATENT AND TRADEMARK OFFICE
P.O. BOX 1450
ALEXANDRIA, VA 22313-1450
www.uspto.gov

MAY 11 2004

In re Application of :
Thomas V. Ward, Jr., et al. :
Serial No. 10/740,281 : DECISION ON PETITION
Filed: December 18, 2003 : TO MAKE SPECIAL
For: PAPER BINDING STRUCTURE AND:
METHOD OF FORMING SAME :

Applicant's petition, filed December 18, 2003, requests that this application be rendered special for examination in that applicant is over sixty-five (65) years of age.

The petition has been reviewed and is found to be in compliance with the requirements for special status as set forth in Section 708.02(IV) of the Manual of Patent Examining Procedure (MPEP).

PETITION GRANTED.

E. Rollins-Cross, Director
Technology Center 3700

Meroni and Meroni
P.O. Box 309
Barrington, IL 60011

UNITED STATES PATENT AND TRADEMARK OFFICE

COMMISSIONER FOR PATENTS
UNITED STATES PATENT AND TRADEMARK OFFICE
P.O. BOX 1450
ALEXANDRIA, VA 22313-1450
www.uspto.gov

POSZ & BETHARDS, PLC
11250 ROGER BACON DRIVE
SUITE 10
RESTON VA 20190

COPY MAILED

JUL 2 8 2004

OFFICE OF PETITIONS

In re Application of :
Brian Kelly and Sekchin Chang :
Application No. 10/740,291 : DECISION ACCORDING STATUS
Filed: December 18, 2003 : UNDER 37 CFR 1.47(a)
For: OFDM REQUESNCY OFFSET :
ESTIMATION APPARATUS AND
METHOD

This is a decision in response to the "Petition Under 37 CFR 1.47(a)," filed July 6, 2004.

The petition is GRANTED.

The above-identified application was filed on December 18, 2003, without an executed oath or declaration. Brian Todd Kelley and Sekchin Chang were named as joint inventors. In response to a "Notice to File Missing Parts of Nonprovisional Application," mailed March 31, 2004, the present petition was filed, as well as *inter alia* (1) the requisite petition fee, (2) a declaration executed by inventor Kelley on behalf of non-signing inventor Chang, (3) the late surcharge under 37 CFR 1.16(e) and (4) an appropriate extension of time.

Petitioner has shown that the non-signing inventor has refused to join in the filing of the above-identified application.

The above-identified application and papers have been reviewed and found in compliance with 37 CFR 1.47(a). This application is hereby accorded Rule 1.47(a) status.
As provided in Rule 1.47(a), this Office will forward notice of this application's filing to the non-signing inventor at the address given in the Declaration. Notice of the filing of this application will also be published in the Official Gazette.

The application file is being forwarded to Technology Center 2681 for examination in due course.

Telephone inquiries regarding this decision should be directed to the undersigned at (703) 305-9220.

Sherry D. Brinkley
Petitions Examiner
Office of Petitions
Office of the Deputy Commissioner
for Patent Examination Policy

Best Available Copy

UNITED STATES PATENT AND TRADEMARK OFFICE

COMMISSIONER FOR PATENTS
UNITED STATES PATENT AND TRADEMARK OFFICE
P.O. BOX 1450
ALEXANDRIA, VA 22313-1450
www.uspto.gov

Sekchin Chang
11300 West Parmer Lane #821
Cedar Park, TX 78613

COPY MAILED

JUL 2 8 2004

OFFICE OF PETITIONS

In re Application of
Brian Todd Kelley and Sekchin Chang
Application No. 10/740,291
Filed: December 18, 2003
Title: OFDM FREQUENCY OFFSET ESTIMATION APPARATUS AND METHOD

LETTER

Dear Mr. Chang:

You are named as a joint inventor in the above-identified United States patent application filed under the provisions of 35 U.S.C. 116 (United States Code) and 37 CFR 1.47(a), Rules of Practice in Patent Cases. Should a patent be granted on the application you will be designated therein as a joint inventor.

As a named inventor you are entitled to inspect any paper in the file wrapper of the application, order copies of all or any part thereof (at a prepaid cost per 37 CFR 1.19) or make your position of record in the application. Alternatively, you may arrange to do any of the preceding through a registered patent attorney or agent presenting written authorization from you. If you care to join the application, counsel of record (see below) would presumably assist you. Joining in the application would entail the filing of an appropriate oath or declaration by you pursuant to 37 CFR 1.63.

Telephone inquiries regarding this communication should be directed to the undersigned at (703) 305-9220. Requests for information regarding your application should be directed to the File Information Unit at (703) 308-2733. Information regarding how to pay for and order a copy of the application, or a specific paper in the application should be directed to the Certification Division at (703) 308-9726 or 1-800-972-6382 (outside the Washington D.C. area).

Sherry D. Brinkley
Petitions Examiner
Office of Petitions
Office of the Deputy Commissioner
For Patent Examination Policy

cc: POSZ & BETHARDS, PLC
11250 ROGER BACON DRIVE
SUITE 10
RESTON VA 20190

Best Available Copy

UNITED STATES PATENT AND TRADEMARK OFFICE

Commissioner for Patents
United States Patent and Trademark Office
P.O. Box 1450
Alexandria, VA 22313-1450
www.uspto.gov

LAW OFFICES OF CHARLES W. BETHARDS, LLP
P.O. BOX 1622
COLLEYVILLE TX 76034

COPY MAILED

NOV 1 4 2008

In re Application of	:	
Kelley et al.	:	
Application No. 10/740,291	:	DECISION ON PETITION
Filed: December 18, 2003	:	
Attorney Docket No. CS20024UP/10-179	:	

This is a decision on the petition, filed July 15, 2008 and supplemented July 17, 2008, which is being treated as a petition under 37 CFR 1.181 (no fee), requesting withdrawal of the holding of abandonment in the above-identified application.

The petition is **GRANTED**.

This application was held abandoned for failure to timely respond to the Office action of January 3, 2008, which set a three (3) month shortened statutory period for reply. A reply was due on or before April 3, 2008 without an extension of time under 37 CFR 1.136, or July 3, 2008 with a three month extension of time.

Petitioner states that a reply was in fact timely filed. A search of the file reveals that the amendment and three month extension of time are of record in the application file and were received by the USPTO on July 3, 2008. Furthermore, petitioner has submitted a copy of a Certificate of Facsimile transmission which indicates transmission to the U.S. Patent and Trademark Office (USPTO) on July 3, 2008 of, *inter alia,* an amendment under 37 CFR 1.111, a petition for an extension of time, and PTO form 2038. A copy of the previously submitted reply accompanies the petition. Accordingly, the response to the Office action of January 3, 2008 is recognized as being timely received in the USPTO.

In view of the above, the holding of abandonment is hereby withdrawn and the application restored to pending status.

This application is being referred to Technology Center AU 2619 for appropriate action in the normal course of business on the reply received with petition.

Telephone inquiries concerning this decision should be directed to Christopher Bottorff at (571) 272-6692.

David Bucci
Petitions Examiner
Office of Petitions

UNITED STATES PATENT AND TRADEMARK OFFICE

COMMISSIONER FOR PATENTS
UNITED STATES PATENT AND TRADEMARK OFFICE
P.O. BOX 1450
ALEXANDRIA, VA 22313-1450
www.uspto.gov

Paper No.

Howard & Howard Attorneys, P.C.
The Pinehurst Office Center, Suite #101
39400 Woodward Avenue
Bloomfield Hills, MI 48304-5151

COPY MAILED

JUN 2 4 2004

OFFICE OF PETITIONS

In re Application of :
Dan Pellerin, et al. :
Application No. 10/740,296 : ON PETITION
Filed: December 18, 2003 :
Attorney Docket No. 60,568-023 :

This is in response to the petition filed April 20, 2004, under 37 CFR 1.47(b), which is being properly treated as a petition under 37 CFR 1.47(a).

The petition is granted.

A petition under 37 CFR 1.47(b) should be filed when there are no inventors present to sign the oath or declaration for a patent application. In view of the signatures of the remaining inventors, the instant petition is being processed under § 1.47(a) appropriately.

Petitioner has shown that the non-signing inventor has refused to join in the filing of the above-identified application.

The above-identified application and papers have been reviewed and found in compliance with 37 CFR 1.47(a). This application is hereby accorded Rule 1.47(a) status.

As provided in 37 CFR 1.47(a), this Office will forward notice of this application's filing to the non-signing inventor at the address given in the petition. Notice of the filing of this application will also be published in the Official Gazette.

The application file is being forwarded to the Office of Initial Patent Examination for further processing.

Telephone inquiries regarding this decision should be directed to the undersigned at (703) 306-3475.

Marianne E. Morgan
Petitions Examiner
Office of Petitions
Office of the Deputy Commissioner
for Patent Examination Policy

UNITED STATES PATENT AND TRADEMARK OFFICE

COMMISSIONER FOR PATENTS
UNITED STATES PATENT AND TRADEMARK OFFICE
P.O. BOX 1450
ALEXANDRIA, VA 22313-1450
www.uspto.gov

Chad A. Sinke
3890 Raye Lane
Harltand, MI 48353

COPY MAILED

JUN 2 4 2004

OFFICE OF PETITIONS

In re Application of
Dan Pellerin; Chad A. Sinke ; and Brian Hoy
Application No. 10/740,296
Filed: December 18, 2003
For: VALVE STEM INSTALLATION SYSTEM AND METHOD OF INSTALLING VALVE STEM

Dear Chad A. Sinke:

You are named as a joint inventor in the above-identified United States patent application, filed under the provisions of 35 U.S.C. 116 (United States Code), and 37 CFR 1.47(a), Rules of Practice in Patent Cases. Should a patent be granted on the application you will be designated therein as a joint inventor.

As a named inventor you are entitled to inspect any paper in the file wrapper of the application, order copies of all or any part thereof (at a prepaid cost per 37 CFR 1.19) or make your position of record in the application. Alternatively, you may arrange to do any of the preceding through a registered patent attorney or agent presenting written authorization from you. If you care to join the application, counsel of record (see below) would presumably assist you. Joining the application would entail the filing of an appropriate oath or declaration by you pursuant to 37 CFR 1.63.

Telephone inquiries regarding this communication should be directed to Marianne Morgan at (703) 306-3475. Requests for information regarding your application should be directed to the File Information Unit at (703) 308-2733. Information regarding how to pay for and order a copy of the application, or a specific paper in the application, should be directed to the Certification Division at (703) 308-9726 or 1 (800) 972-6382 (outside the Washington, DC area).

Marianne E. Morgan
Petitions Examiner
Office of Petitions
Office of the Deputy Commissioner
for Patent Examination Policy

cc: Howard & Howard Attorneys, P.C.
The Pinehurst Office Center, Suite #101
39400 Woodward Avenue
Bloomfield Hills, MI 48304-5151

UNITED STATES PATENT AND TRADEMARK OFFICE

Commissioner for Patents
United States Patent and Trademark Office
P.O. Box 1450
Alexandria, VA 22313-1450
www.uspto.gov

OFFICE OF PATENT COUNSEL
SPAWARSYCEN, CODE 20012
53510 SIVERGATE AVE. ROOM 103
SAN DIEGO, CA 92152-5765

COPY MAILED

FEB 27 2006

OFFICE OF PETITIONS

In re Application of :
Willard I. Henry, et al. :
Application No. 10/740,297 : ON PETITION
Filed: December 18, 2003 :
Attorney Docket No. 83753 :

This is a decision on the petition under 37 CFR 1.137(b), filed November 29, 2005, to revive the above-identified application.

The petition is **GRANTED.**

The above-identified application became abandoned for failure to reply in a timely manner to the non-final Office action mailed February 25, 2005, which set a shortened statutory period for reply of three (3) months. No extensions of time under the provisions of 37 CFR 1.136(a) were obtained. Accordingly, the application became abandoned on May 26, 2005. The Notice of Abandonment was mailed on October 6, 2005.

An extension of time under 37 CFR 1.136 must be filed prior to the expiration of the maximum extendable period for reply. See In re Application of S., 8 USPQ2d 1630, 1631 (Comm'r Pats. 1988). Accordingly, the $1020 extension of time submitted with the petition on November 29, 2005 was subsequent to the maximum extendable period for reply, this fee is unnecessary and will be credited to petitioner's deposit account.

The petition satisfies the requirement of 37 CFR 1.137 (b) in that petitioner has supplied (1) the reply in the form of an Amendment; (2) the petition fee of $1500; and (3) the required statement of unintentional delay have been received. Accordingly, the petition filed November 29, 2005 is accepted as having been unintentionally delayed.

Telephone inquiries concerning this decision should be directed to the undersigned at (571) 272-3229.

The application matter is being referred to Technology Center 2800, Art Unit 2821 for further processing.

Retta Williams

Retta Williams
Petitions Examiner
Office of Petitions

UNITED STATES PATENT AND TRADEMARK OFFICE

Commissioner for Patents
United States Patent and Trademark Office
P.O. Box 1450
Alexandria, VA 22313-1450
www.uspto.gov

FOLEY & LARDNER LLP
1530 PAGE MILL ROAD
PALO ALTO, CA 94304

COPY MAILED

NOV 09 2005

OFFICE OF PETITIONS

In re Application of :
Ving Lee et al :
Application No. 10/740,304 : DECISION ON PETITION
Filed: December 18, 2003 : TO WITHDRAW
Attorney Docket No. 21910-31 : FROM RECORD
:

This is a decision on the Request to Withdraw as attorney or agent of record under 37 C.F.R. § 1.36(b), filed September 27, 2005.

The request is **APPROVED**.

A grantable request to withdraw as attorney/agent of record must be signed by every attorney/agent seeking to withdraw or contain a clear indication that one attorney is signing on behalf of another/others. A request to withdraw will not be approved unless at least 30 (thirty) days would remain between the date of approval and the later of the expiration date of a time to file a response or the expiration date of the maximum time period which can be extended under 37 C.F.R. § 1.136(a).

The request was signed by Gerald F. Swiss on behalf of all attorneys of record who are associated with customer No. 38706.

The correspondence address of record has been changed and the new correspondence address is the address indicated below.

Telephone inquiries concerning this decision should be directed to Irvin Dingle at (571) 272-3210.

David Bucci
Petitions Examiner
Office of Petitions

cc: Jeffry S. Mann, Ph.D., J.D.
Morgan Lewis and Bockius
One Market, Spear Street Tower
San Francisco, CA 94105

UNITED STATES PATENT AND TRADEMARK OFFICE

Commissioner for Patents
United States Patent and Trademark Office
P.O. Box 1450
Alexandria, VA 22313-1450
www.uspto.gov

MORGAN, LEWIS & BOCKIUS LLP (SF)
2 PALO ALTO SQUARE
3000 EL CAMINO REAL, SUITE 700
PALO ALTO CA 94306

COPY MAILED

JUN 21 2007

OFFICE OF PETITIONS

In re Application of :
Ving Lee et al. :
Application No. 10/740,304 : ON PETITION
Filed: December 18, 2003 :
Attorney Docket No.: 64507–5003-US :

This is a decision on the petition filed October 24, 2006, under 37 CFR 1.181 to withdraw the holding of abandonment for the above-identified application, or in the alternative under 37 CFR 1.137(b) to revive the application.

The petition under 37 CFR 1.181 is **GRANTED**.
The petition under 37 CFR 1.137(b) is **DISMISSED** as involving moot issues.

In response to a non-Final Office Action mailed January 4, 2006, which set a three month period for reply, petitioners filed a Request for Continued Examination (RCE) with an amendment and a two month extension of time request on May 11, 2006 (May 8, 2006 certificate of mail date). Since the office action mailed was a non-Final Office Action and prosecution was not closed, a Notice of Improper RCE was mailed on August 2, 2006. Subsequently, a Notice of Abandonment was mailed on September 11, 2006.

Petitioner asserts that since the Notice of Improper RCE was not sent until after the maximum period for response had elapsed, they were unable to correct the deficiency in their May 8, 2006 response and thus the failure to timely and properly file a response was unintentional.

As the office action mailed was non-Final and as an amendment was filed with the RCE, the RCE was improper however the amendment was a proper response to the office action. In view thereof, the application should not have been held abandoned. The Notice of Abandonment was sent in error and is hereby withdrawn. No petition fee is due and none has been charged.

Since this application is being treated under 37 CFR 1.181 and is grantable, there is no need to treat the petition in the alternative under the unintentional standard.

This matter will be referred to Technology Center 1724 for appropriate action on the amendment filed May 11, 2006 (May 8, 2006 certificate of mail date) as a proper response to the non-Final Office Action mailed January 4, 2006.

Telephone inquiries concerning this matter may be directed to the undersigned Petitions Attorney at (571) 272-3212.

Patricia Faison-Ball

Patricia Faison-Ball
Senior Petitions Attorney
Office of Petitions

UNITED STATES PATENT AND TRADEMARK OFFICE

Commissioner for Patents
United States Patent and Trademark Office
P.O. Box 1450
Alexandria, VA 22313-1450
www.uspto.gov

FITZ ARTHUR HARRIS
8621 NW 53RD ST.
LAUDERHILL, FL 33351

COPY MAILED

SEP 1 2 2008

OFFICE OF PETITIONS

In re Application of Harris :
Application No. 10/740,307 : Decision on Petition
Filing Date: December 18, 2003 :
For: JPH Building :

This is a decision on the petition filed July 18, 2008, under 37 CFR 1.181 to withdraw the holding of abandonment of the above-identified application.

The petition is **dismissed**.

Facts:

The Office mailed a Notice of Allowance and a Notice of Allowability on December 28, 2007. Both notices set a time period for reply of three months.

The Notice of Allowance required the submission of $720 for the issue fee and $300 for the publication fee.

The Notice of Allowability stated,

> Applicant has THREE MONTHS FROM THE "MAILING DATE" of this communication to file a [satisfy] the requirements below. Failure to comply will result in ABANDONMENT of this application....
>
> CORRECTED DRAWINGS (as "replacement sheets") must be submitted.

The Notice of Allowability did not include reference a Notice of Draftsperson's Patent Drawing Review or specify exactly why the drawings already filed were unacceptable.

The Notice of Allowability included an Examiner's Amendment which added a single sentence to the specification and changed the word "addit vvvvvionally" in Claim 32 to the word "additionally." The Examiner's Amendment stated that, if any of the changes were unacceptable, petitioner could file a petition under 37 CFR 1.312.

Petitioner states he interpreted the requirement for corrected drawings to be a requirement for an amendment responding to the examiner's amendment. Petitioner filed an amendment with the apparent goal of incorporating the changes made in the Examiner's amendment.

Discussion:

Petitioner received the Notice of Allowability indicating corrected drawings must be submitted in order to avoid abandonment. However, petitioner did not file new drawings. Petitioner did not file any paper objecting to, or even referencing, the requirement for new drawings. The record fails to indicate petitioner sought clarification of the requirement, in writing or orally, from the examiner.

An applicant who, upon receiving a notice stating an application will become abandoned unless corrected drawings are filed, assumes the notice does not require corrected drawings also assumes the risk the application will become abandoned.

Some of the errors in the past drawings may not be apparent. However, when one receives a notice containing an error, such as the omission of a Notice of Draftsperson's Review, one must contact the Office within the time period set forth in the notice. Section 710.06 of the Manual of Patent Examination Procedure states,

> Where the citation of a reference is incorrect or an Office action contains some other error that affects applicant's ability to reply to the Office action and this error is called to the attention of the Office within 1 month of the mail date of the action, the Office will restart the previously set period for reply to run from the date the error is corrected, if requested to do so by applicant. If the error is brought to the attention of the Office within the period for reply set in the Office action but more than 1 month after the date of the Office action, the Office will set a new period for reply, if requested to do so by the applicant, to substantially equal the time remaining in the reply period. For example, if the error is brought to the attention of the Office 5 weeks after mailing the action, then the Office would set a new 2-month period for reply. The new period for reply must be at least 1 month and would run from the date the error is corrected. See MPEP § 707.05(g) for the manner of correcting the record where there has been an erroneous citation....
>
> If the error in citation or other defective Office action is called to the attention of the Office after the expiration of the period for reply, the period will not be restarted.

Since petitioner did not timely file new drawings, file any document discussing the requirement for corrected drawings, or timely contact the Office for clarification of the requirement, the application is abandoned and the petition cannot be granted.

Attached is a copy of a Notice of Draftsperson's Patent Drawing Review discussing the corrections that must be made to the drawings in order to have the Office accept the drawings.

Petitioner may wish to consider filing a petition to revive based on unintentional abandonment under 37 CFR 1.137(a). A grantable petition pursuant to 37 CFR 1.137(a) must be accompanied by the required reply (corrected drawings), the required petition fee ($255 if paid prior to October 2, 2008; $270 if paid on or after October 2, 2008), and a showing that the delay in filing the required reply from the due date for the reply until the filing of a grantable petition was unavoidable (this requirement has been met).

A copy of petition under 37 CFR 1.137(a) form is attached and a PDF "fillable" version of the form can be found at: "http://www.uspto.gov/web/forms/sb0061.pdf".

Further correspondence with respect to this matter should be addressed as follows:

By mail: Mail Stop Petition
Commissioner for Patents
P.O. Box 1450
Alexandria, VA 22313-1450

By facsimile: (571) 273-8300
Attn: Office of Petitions

By hand: U.S. Patent and Trademark Office
Customer Service Window
Randolph Building
401 Dulany Street
Alexandria, VA 22314

Telephone inquiries regarding this communication should be directed to Petitions Attorney Steven Brantley at (571) 272-3203.

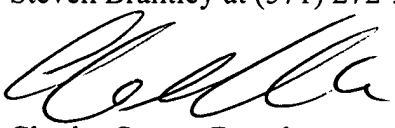

Charles Steven Brantley
Senior Petitions Attorney
Office of Petitions

Attached: Notice of Draftsperson's Patent Drawing Review
Petition under 37 CFR 1.137(a) form
Privacy Act Notice

Form PTO-948 (Rev. 06/03)
Application No. 10/740307

U.S. DEPARTMENT OF COMMERCE
U.S. Patent and Trademark Office

NOTICE OF DRAFTSPERSON'S PATENT DRAWING REVIEW

The drawing(s) filed (insert date) 12/18/2003 are:

A. ___ approved by the Draftsperson under 37 CFR 1.84 or 1.152.

B. ✓ objected to by the Draftsperson under 37 CFR 1.84 or 1.152 for the reasons indicated below. Corrected drawings are required.

1. DRAWINGS. 37 CFR 1.84(a): Acceptable categories of drawings: Black ink or Color (3 sets required).

___ Color drawings are not acceptable until petition is granted. Fig(s)___

___ Pencil and non black ink not permitted. Fig(s)___

2. PHOTOGRAPHS. 37 CFR 1.84(b)

___ One (1) full-tone set is required. Fig(s)___

___ Photographs may not be mounted. 37 CFR 1.84(e)

___ Photographs must meet paper size requirements of 37 CFR 1.84(f). Fig(s)___

___ Poor quality (half-tone). Fig(s)___

3. TYPE OF PAPER. 37 CFR 1.84(e)

___ Paper not flexible, strong, white, and durable. Fig(s)___

✓ Erasures, alterations, overwritings, interlineations, folds, copy machine marks not accepted. Fig(s) 1-17

4. SIZE OF PAPER. 37 CFR 1.84(f): Acceptable sizes:
21.0 cm by 29.7 cm (DIN size A4) or
21.6 cm by 27.9 cm (8 1/2x 11 inches)

___ All drawing sheets not the same size. Sheet(s)___

___ Drawings sheets not an acceptable size. Fig(s)___

5. MARGINS. 37 CFR 1.84(g): Acceptable margins: Top 2.5 cm Left 2.5 cm Right 1.5 cm Bottom 1.0 cm

___ Margins not acceptable. Fig(s)___

___ Top (T) ___ Left (L)

___ Right (R) ___ Bottom (B)

6. VIEWS. 37 CFR 1.84(h)

REMINDER: Specification may require revision to correspond to drawing changes, e.g., if Fig. 1 is changed to Fig. 1A, Fig 1B and Fig. 1C, etc., the specification, at the Brief Description of the Drawings, must likewise be changed.

___ Views not labeled separately or properly. Fig(s)___

7. SECTIONAL VIEWS. 37 CFR 1.84(h)(3)

✓ Sectional designation should be noted with Arabic or Roman numbers. Fig(s) 7-10 properly

- incomplete structured lines obj (Fig 1-3)
- Less shadings req'd for (Fig 1-3)
- sheet nos should be on top margin of Dwg Sht (Fig 1-17)

8. ARRANGEMENT OF VIEWS. 37 CFR 1.84(i)

___ Words do not appear on a horizontal, left-to-right fashion when page is either upright or turned so that the top becomes the right side, except for graphs. Fig(s)___

9. SCALE. 37 CFR 1.84(k)

___ Scale not large enough to show mechanism without crowding when drawing is reduced in size to two-thirds in reproduction. Fig(s)___

10. CHARACTER OF LINES, NUMBERS, & LETTERS. 37 CFR 1.84(l)

✓ Lines, numbers & letters not uniformly thick and well defined, clean, durable, and black (poor line quality). Fig(s) 1 and 2 (pale)

11. SHADING. 37 CFR 1.84(m)

___ Solid black areas pale. Fig(s)___

___ Solid black shading not permitted. Fig(s)___

12. NUMBERS, LETTERS, & REFERENCE CHARACTERS. 37 CFR 1.84(p)

___ Numbers and reference characters not plain and legible. Fig(s)___

___ Figure legends are poor. Fig(s)___

___ Numbers and reference characters not oriented in the same direction as the view. 37 CFR 1.84(p)(1) Fig(s)___

___ English alphabet not used. 37 CFR 1.84(p)(2) Fig(s)___

___ Numbers, letters and reference characters must be at least 32 cm (1/8 inch) in height. 37 CFR 1.84(p)(3). Fig(s)___

13. LEAD LINES. 37 CFR 1.84(q)

___ Lead lines missing. Fig(s)___

14. NUMBERING OF SHEETS OF DRAWINGS. 37 CFR 1.84(t)

___ Sheets not numbered consecutively, and in Arabic numbers beginning with number 1. Sheet(s)___

15. NUMBERING OF VIEWS. 37 CFR 1.84(u)

___ Views not numbered consecutively, and in Arabic numerals, beginning with number 1. Fig(s)___

16. DESIGN DRAWINGS. 37 CFR 1.152

___ Surface shading shown not appropriate. Fig(s)___

___ Solid black surface shading is not permitted except when used to represent the color black as well as color contrast. Fig(s)___

COMMENTS:

- Shadings of part #18 changed to stippling representing concrete (Fig 1-3)
- Admendments to be made properly for submission

Reviewer WJS

Date 9/5/08

If you have questions, call (703) 305-8404.

Attachment to Paper No. ___

☆ U.S. GOVERNMENT PRINTING OFFICE: 2003-300-153

PTO/SB/61 (08-08)
Approved for use through 09/30/2008. OMB 0651-0031
U.S. Patent and Trademark Office; U.S. DEPARTMENT OF COMMERCE
Under the Paperwork Reduction Act of 1995, no persons are required to respond to a collection of information unless it displays a valid OMB control number.

PETITION FOR REVIVAL OF AN APPLICATION FOR PATENT ABANDONED UNAVOIDABLY UNDER 37 CFR 1.137(a)	Docket Number (Optional)

First Named Inventor: _____ Art Unit: _____

Application Number: _____ Examiner: _____

Filed: _____

Title: _____

Attention: Office of Petitions
Mail Stop Petition
Commissioner for Patents
P.O. Box 1450
Alexandria, VA 22313-1450

NOTE: If information or assistance is needed in completing this form, please contact Petitions Information at (571) 272-3282.

The above-identified application became abandoned for failure to file a timely and proper reply to a notice or action by the United States Patent and Trademark Office. The date of abandonment is the day after the expiration date of the period set for reply in the Office notice or action plus any extensions of time actually obtained.

APPLICANT HEREBY PETITIONS FOR REVIVAL OF THIS APPLICATION.

NOTE: A grantable petition requires the following items:

(1) Petition fee.
(2) Reply and/or issue fee.
(3) Terminal disclaimer with disclaimer fee – required for all utility and plant applications filed before June 8, 1995, and for all design applications; and
(4) Adequate showing of the cause of unavoidable delay.

1. Petition fee

☐ Small entity – fee $_____ (37 CFR 1.17(l)). Applicant claims small entity status. See 37 CFR 1.27.

☐ Other than small entity – fee $_____ (37 CFR 1.17(l)).

2. Reply and/or fee

A The reply and/or fee to the above-noted Office action in the form of _____ (identify the type of reply):

☐ has been filed previously on _____.

☐ is enclosed herewith.

B The issue fee of $ _____

☐ has been filed previously on _____.

☐ is enclosed herewith.

This collection of information is required by 37 CFR 1.137(a). The information is required to obtain or retain a benefit by the public which is to file (and by the USPTO to process) an application. Confidentiality is governed by 35 U.S.C. 122 and 37 CFR 1.11 and 1.14. This collection is estimated to take 8 hours to complete, including gathering, preparing, and submitting the completed application form to the USPTO. Time will vary depending upon the individual case. Any comments on the amount of time you require to complete this form and/or suggestions for reducing this burden, should be sent to the Chief Information Officer, U.S. Patent and Trademark Office, U.S. Department of Commerce, P.O. Box 1450, Alexandria, VA 22313-1450. DO NOT SEND FEES OR COMPLETED FORMS TO THIS ADDRESS. **SEND TO: Mail Stop Petition, Commissioner for Patents, P.O. Box 1450, Alexandria, VA 22313-1450.**
If you need assistance in completing the form, call 1-800-PTO-9199 and select option 2.

PETITION FOR REVIVAL OF AN APPLICATION FOR PATENT ABANDONED UNAVOIDABLY UNDER 37 CFR 1.137(a)

3. Terminal disclaimer with disclaimer fee

☐ Since this utility/plant application was filed on or after June 8, 1995, no terminal disclaimer is required.

☐ A terminal disclaimer (and disclaimer fee (37 CFR 1.20(d)) of $ _____ for a small entity or $ _____ for other than a small entity) disclaiming the required period of time is enclosed herewith (see PTO/SB/63).

4. An adequate showing of the cause of the delay, and that the entire delay in filing the required reply from the due date for the reply until the filing of a grantable petition under 37 CFR 1.137(a) was unavoidable, is enclosed.

WARNING:

Petitioner/applicant is cautioned to avoid submitting personal information in documents filed in a patent application that may contribute to identity theft. Personal information such as social security numbers, bank account numbers, or credit card numbers (other than a check or credit card authorization form PTO-2038 submitted for payment purposes) is never required by the USPTO to support a petition or an application. If this type of personal information is included in documents submitted to the USPTO, petitioners/applicants should consider redacting such personal information from the documents before submitting them to the USPTO. Petitioner/applicant is advised that the record of a patent application is available to the public after publication of the application (unless a non-publication request in compliance with 37 CFR 1.213(a) is made in the application) or issuance of a patent. Furthermore, the record from an abandoned application may also be available to the public if the application is referenced in a published application or an issued patent (see 37 CFR 1.14). Checks and credit card authorization forms PTO-2038 submitted for payment purposes are not retained in the application file and therefore are not publicly available.

_____ _____
Signature Date

_____ _____
Typed or printed name Registration Number, if applicable

_____ _____
Address Telephone Number

_____
Address

Enclosure ☐ Fee Payment

☐ Reply

☐ Terminal Disclaimer Form

☐ Additional sheets containing statements establishing unavoidable delay

☐ _____

CERTIFICATE OF MAILING OR TRANSMISSION (37 CFR 1.8(a))

I hereby certify that this correspondence is being:

☐ deposited with the United States Postal Service on the date shown below with sufficient postage as first class mail in an envelope addressed to **Mail Stop Petition**, Commissioner for Patents, P.O. Box 1450, Alexandria, VA 22313-1450.

☐ transmitted by facsimile on the date shown below to the United States Patent and Trademark Office at (571) 273-8300.

_____ _____
Date Signature

_____
Typed or printed name of person signing certificate

PTO/SB/61 (08-08)
Approved for use through 09/30/2008. OMB 0651-0031
U.S. Patent and Trademark Office; U.S. DEPARTMENT OF COMMERCE
Under the Paperwork Reduction Act of 1995, no persons are required to respond to a collection of information unless it displays a valid OMB control number.

PETITION FOR REVIVAL OF AN APPLICATION FOR PATENT ABANDONED UNAVOIDABLY UNDER 37 CFR 1.137(a)

NOTE: The following showing of the cause of unavoidable delay must be signed by all applicants or by any other party who is presenting statements concerning the cause of delay.

Signature	Date
Typed or printed name	Registration Number, if applicable

(In the space provided below, please explain in detail the reasons for the delay in filing a proper reply.)

(Please attach additional sheets if additional space is needed.)

Privacy Act Statement

The **Privacy Act of 1974 (P.L. 93-579)** requires that you be given certain information in connection with your submission of the attached form related to a patent application or patent. Accordingly, pursuant to the requirements of the Act, please be advised that: (1) the general authority for the collection of this information is 35 U.S.C. 2(b)(2); (2) furnishing of the information solicited is voluntary; and (3) the principal purpose for which the information is used by the U.S. Patent and Trademark Office is to process and/or examine your submission related to a patent application or patent. If you do not furnish the requested information, the U.S. Patent and Trademark Office may not be able to process and/or examine your submission, which may result in termination of proceedings or abandonment of the application or expiration of the patent.

The information provided by you in this form will be subject to the following routine uses:

1. The information on this form will be treated confidentially to the extent allowed under the Freedom of Information Act (5 U.S.C. 552) and the Privacy Act (5 U.S.C 552a). Records from this system of records may be disclosed to the Department of Justice to determine whether disclosure of these records is required by the Freedom of Information Act.
2. A record from this system of records may be disclosed, as a routine use, in the course of presenting evidence to a court, magistrate, or administrative tribunal, including disclosures to opposing counsel in the course of settlement negotiations.
3. A record in this system of records may be disclosed, as a routine use, to a Member of Congress submitting a request involving an individual, to whom the record pertains, when the individual has requested assistance from the Member with respect to the subject matter of the record.
4. A record in this system of records may be disclosed, as a routine use, to a contractor of the Agency having need for the information in order to perform a contract. Recipients of information shall be required to comply with the requirements of the Privacy Act of 1974, as amended, pursuant to 5 U.S.C. 552a(m).
5. A record related to an International Application filed under the Patent Cooperation Treaty in this system of records may be disclosed, as a routine use, to the International Bureau of the World Intellectual Property Organization, pursuant to the Patent Cooperation Treaty.
6. A record in this system of records may be disclosed, as a routine use, to another federal agency for purposes of National Security review (35 U.S.C. 181) and for review pursuant to the Atomic Energy Act (42 U.S.C. 218(c)).
7. A record from this system of records may be disclosed, as a routine use, to the Administrator, General Services, or his/her designee, during an inspection of records conducted by GSA as part of that agency's responsibility to recommend improvements in records management practices and programs, under authority of 44 U.S.C. 2904 and 2906. Such disclosure shall be made in accordance with the GSA regulations governing inspection of records for this purpose, and any other relevant (*i.e.*, GSA or Commerce) directive. Such disclosure shall not be used to make determinations about individuals.
8. A record from this system of records may be disclosed, as a routine use, to the public after either publication of the application pursuant to 35 U.S.C. 122(b) or issuance of a patent pursuant to 35 U.S.C. 151. Further, a record may be disclosed, subject to the limitations of 37 CFR 1.14, as a routine use, to the public if the record was filed in an application which became abandoned or in which the proceedings were terminated and which application is referenced by either a published application, an application open to public inspection or an issued patent.
9. A record from this system of records may be disclosed, as a routine use, to a Federal, State, or local law enforcement agency, if the USPTO becomes aware of a violation or potential violation of law or regulation.

UNITED STATES PATENT AND TRADEMARK OFFICE

Commissioner for Patents
United States Patent and Trademark Office
P.O. Box 1450
Alexandria, VA 22313-1450
www.uspto.gov

FITZ ARTHUR HARRIS
8621 NW 53RD ST.
LAUDERHILL, FL 33351

COPY MAILED

JAN 1 4 2009

OFFICE OF PETITIONS

In re Application of Harris :
Application No. 10/740,307 : Decision on Petition
Filing Date: December 18, 2003 :
For: JPH Building :

This is a decision on the petition under 37 CFR 1.137(a), filed November 25, 2008, to revive the above-identified application.

The petition is **granted.**

The Office mailed a Notice of Allowance and a Notice of Allowability on December 28, 2007. Both notices set a time period for reply of three months.

The Notice of Allowance required the submission of $720 for the issue fee and $300 for the publication fee.

The Notice of Allowability stated,

> Applicant has THREE MONTHS FROM THE "MAILING DATE" of this communication to file a [satisfy] the requirements below. Failure to comply will result in ABANDONMENT of this application....
>
> CORRECTED DRAWINGS (as "replacement sheets") must be submitted.

The Notice of Allowability did not include reference a Notice of Draftsperson's Patent Drawing Review or specify exactly why the drawings already filed were unacceptable.

The Notice of Allowability included an Examiner's Amendment which added a single sentence to the specification and changed the word "addit vvvvvionally" in Claim 32 to the word "additionally." The Examiner's Amendment stated that, if any of the changes were unacceptable, petitioner could file a petition under 37 CFR 1.312.

Petitioner interpreted the requirement for corrected drawings to be a requirement for an amendment responding to the examiner's amendment. Petitioner filed an amendment with the apparent goal of incorporating the changes made in the Examiner's amendment.

Since petitioner neither objected to the drawing requirement nor filed corrected drawings, the application became abandoned on March 29, 2008.

A Notice of Abandonment was mailed on July 3, 2008.

Petitioner has filed a petition under 37 CFR 1.137(a), the required petition fee, and corrected drawings. Petitioner has also demonstrated petitioner's delay in submitting the drawings was unavoidable.

Petitioner has met the requirements to revive the above-identified application pursuant to 37 CFR 1.137(a). Therefore, the petition is granted.

The Patent Publication Branch of the Office of Data Management will be informed of this decision and the application will be issued as a patent in due course.

Telephone inquiries regarding this communication should be directed to Petitions Attorney Steven Brantley at (571) 272-3203.

Charles Steven Brantley
Senior Petitions Attorney
Office of Petitions

UNITED STATES PATENT AND TRADEMARK OFFICE

Commissioner for Patents
United States Patent and Trademark Office
P.O. Box 1450
Alexandria, VA 22313-1450
www.uspto.gov

MARK G. BOCCHETTI
PATENT LEGAL STAFF
EASTMAN KODAK COMPANY
343 STATE STREET
ROCHESTER NY 14650-2201

COPY MAILED

FEB 0 4 2009

OFFICE OF PETITIONS

In re Application of :
Robert D. Fiete :
Application No. 10/740,318 : DECISION ON PETITION
Filed: December 18, 2003 :
Attorney Docket No. 87207RLW :

This is a decision on the petition under the unintentional provisions of 37 CFR 1.137(b), filed February 26, 2008, to revive the above-identified application.

The petition is **GRANTED**.

The application became abandoned for failure to reply in a timely manner to the non-final Office action mailed May 16, 2007, which set a shortened statutory period for reply of three (3) months. No extensions of time under the provisions of 37 CFR 1.136(a) were obtained. Accordingly, the application became abandoned on August 17, 2007. A Notice of Abandonment was mailed January 8, 2008.

The petition satisfies the requirements of 37 CFR 1.137(b) in that petitioner has supplied (1) the reply in the form of an Amendment, (2) the petition fee of $1,540.00, and (3) an adequate statement of unintentional delay.

Telephone inquiries concerning this decision should be directed to Joan Olszewski at (571) 272-7751.

This application is being referred to Technology Center AU 2624 for appropriate action by the Examiner in the normal course of business on the reply received.

/Liana Walsh/
Liana Walsh
Petitions Examiner
Office of Petitions

BRINKS HOFER GILSON & LIONE
RECEIVED
AUG 12 2002
SATELLITE U.S. DOCKET

OIPE
APR 15 2004
PATENT & TRADEMARK OFFICE

UNITED STATES PATENT AND TRADEMARK OFFICE
COMMISSIONER FOR PATENTS
UNITED STATES PATENT AND TRADEMARK OFFICE
WASHINGTON, D.C. 20231
www.uspto.gov

Paper No. 7

BRINKS HOFER GILSON & LIONE
P.O. Box 10395
Chicago, IL 60610

COPY MAILED

AUG 0 2 2002

OFFICE OF PETITIONS

In re Application of
Christopher Meyers, Douglas Bradley, Edward Umin, Ronald Holcomb and Steven Lum
Application No. 09/965,316
Filed: September 27, 2001
Attorney Docket No.10541-057

DECISION GRANTING STATUS UNDER 37 CFR 1.47(a)

This is in response to the petition under 37 CFR 1.47(a), filed April 15, 2002, certificate of mailing date April 5, 2002.

The petition is GRANTED.

Petitioner has shown that non-signing inventor Steven Lum has refused to join in the filing of the above-identified application after having been presented with the application papers. Specifically, the petition asserts copies of the application were mailed via United Parcel Service as well as certified mail to the non-signing inventor Lum. The non-signing inventor's failure to respond to the application sufficiently establishes that he refuses to execute the application papers.

The above-identified application and papers have been reviewed and found in compliance with 37 CFR 1.47(a). This application is hereby accorded Rule 1.47(a) status.

As provided in Rule 1.47(c), this Office will forward notice of this application's filing to the non-signing inventor at the address given in the petition. Notice of the filing of this application will also be published in the Official Gazette.

This application is being forwarded to the Office of Initial Patent Examination for further processing.

Telephone inquiries related to this decision may be directed to Petitions Attorney Charlema R. Grant at (703) 306-0251.

Beverly M. Flanagan
Supervisory Petitions Examiner
Office of Petitions
Office of the Deputy Commissioner
for Patent Examination Policy

RECEIVED
AUG 14 2002
BRINKS HOFER-ANN ARBOR

BRINKS HOFER GILSON & LIONE
RECEIVED
AUG 06 2002
U. S. DOCKET

UNITED STATES PATENT AND TRADEMARK OFFICE

Commissioner for Patents
United States Patent and Trademark Office
P.O. Box 1450
Alexandria, VA 22313-1450
www.uspto.gov

HOWARD & HOWARD ATTORNEYS PC
THE PINEHURST OFFICE CENTER
SUITE 101
39400 WOODWARD AVE
BLOOMFIELD HILLS MI 48304-5151

COPY MAILED

DEC 28 2004

OFFICE OF PETITIONS

In re Application of :
Pellerin, et al. :
Application No. 10/740,328 :
Filed: December 18, 2003 :
Attorney Docket No. 60,568-019 :

DECISION ACCORDING STATUS
UNDER 37 CFR 1.47(a)

This is in response to the paper titled "DECLARATION OF GREGORY D. DEGRAZIA", filed April 16, 2004, which is being treated as a petition under 37 CFR 1.47(a).

The petition under 37 CFR 1.47(a) is **GRANTED**.

The above-identified application was filed on December 18, 2003, without an executed oath or declaration. Accordingly, on April 1, 2004, the Initial Patent Examination Division mailed a Notice to File Missing Parts, requiring an executed oath or declaration, together with a surcharge for its late filing.

In reply, applicant filed the instant petition on April 16, 2004. Accompanying the petition was a declaration executed by inventors Dan Pellerin and Brian Hoy, with the signature block for inventor Chad A. Sinke left blank.

A grantable petition under 37 CFR 1.47(a) requires: (1) proof that the non-signing inventor(s) cannot be reached or refuses to sign the oath or declaration after having been presented with the application papers (specification, claims and drawings); (2) an acceptable oath or declaration in compliance with 37 CFR 1.63; (3) the petition fee; and (4) a statement of the last known address of the non-signing inventor(s).

On petition, Rule 47 applicant has attested Sinke made an oral refusal to sign the declaration, after having been presented with the application papers, during a phone conversation on February 24, 2004.

On petition, Rule 47 applicant has satisfied the requirements of 37 CFR 1.47(a). The declaration submitted with the petition has been determined to be in compliance with 37 CFR 1.63. Accordingly, the above-identified application is hereby accorded Rule 1.47(a) status.

Pursuant to 37 CFR 1.47(c), this Office will forward notice of this application's filing to the last known address provided in the petition. Notice of the filing of this application will also be published in the Official Gazette.

The petition fee of $130 has been charged to Deposit Account No. 08-2789, as authorized.

The application file is being forwarded to Group Art Unit 3651 for docketing and examination in due course.

Telephone inquiries related to this decision may be directed to the undersigned at (571)272-3207.

Cliff Congo
Petitions Attorney
Office of Petitions

UNITED STATES PATENT AND TRADEMARK OFFICE

Commissioner for Patents
United States Patent and Trademark Office
P.O. Box 1450
Alexandria, VA 22313-1450
www.uspto.gov

NALCO COMPANY
1601 W. DIEHL ROAD
NAPERVILLE IL 60563-1198

COPY MAILED

FEB 15 2006

OFFICE OF PETITIONS

In re Application of	:	
Ho et al.	:	
Application No. 10/740,336	:	ON PETITION
Filed: December 18, 2003	:	
Attorney Docket No. 7593 P1	:	

This is a decision on the petition under 37 C.F.R. § 1.137(b), filed January 6, 2006, to revive the above-identified application.

The petition is **GRANTED.**

The petition satisfies the conditions for revival pursuant to the provisions of 37 CFR 1.137(b) in that (1) the reply in the form of a Response to Office Action; (2) the petition fee; and (3) the required statement of unintentional delay have been received. Accordingly, the response has been accepted as having been unintentionally delayed.

This matter is being referred to Technology Center 1600 for further examination on the merits.

Telephone inquiries regarding this decision should be directed to the undersigned at (571) 272-3282.

Liana Chase
Petitions Examiner
Office of Petitions

UNITED STATES PATENT AND TRADEMARK OFFICE

Commissioner for Patents
United States Patent and Trademark Office
P.O. Box 1450
Alexandria, VA 22313-1450
www.uspto.gov

NALCO COMPANY
1601 W. DIEHL ROAD
NAPERVILLE IL 60563-1198

COPY MAILED

MAR 2 6 2007

OFFICE OF PETITIONS

In re Application of	:	
Ho et al.	:	
Application No. 10/740,336	:	ON PETITION
Filed: December 18, 2003	:	
Attorney Docket No. 7593-P1	:	

This is a decision on the petition under 37 C.F.R. § 1.137(b), filed January 23, 2007, to revive the above-identified application.

The petition is **GRANTED.**

The petition satisfies the conditions for revival pursuant to the provisions of 37 CFR 1.137(b) in that (1) the reply in the form of a Request for Continued Examination (RCE); (2) the petition fee; and (3) the required statement of unintentional delay have been received. Accordingly, the response has been accepted as having been unintentionally delayed.

This matter is being referred to Technology Center 1600 for processing of the Request for Continued Examination under 37 CFR 1.114 filed with the instant petition.

Telephone inquiries regarding this decision should be directed to the undersigned at (571) 272-3206.

Liana Walsh
Petitions Examiner
Office of Petitions

UNITED STATES PATENT AND TRADEMARK OFFICE

Commissioner for Patents
United States Patent and Trademark Office
P.O. Box 1450
Alexandria, VA 22313-1450
www.uspto.gov

SCULLY SCOTT MURPHY & PRESSER, PC
400 GARDEN CITY PLAZA
SUITE 300
GARDEN CITY NY 11530

COPY MAILED

FEB 0 2 2006

OFFICE OF PETITIONS

In re Application of :
Noriyuki Fujimori :
Application No. 10/740,347 : ON PETITION
Filed: December 18, 2003 :
Attorney Docket No. 17325 :
Title of Invention: Solid-State Imaging Device and :
Manufacturing Method Thereof

This is a decision on the petition under 37 CFR §1.181 filed November 17, 2005 to withdraw the holding of abandonment.

The petition filed under 37 CFR 1.181 is **Granted**.

This above-identified application was held abandoned for failure to timely reply to the restriction requirement mailed March 28, 2005. The Restriction Requirement set a one (1) month shortened statutory period for reply. A reply was not received. No extensions of time were obtained under the provisions of 37 CFR 1.136(a). Accordingly, this application was held abandoned on April 29, 2005. A Notice of Abandonment was mailed on November 7, 2005.

Petitioner maintains that a response to the Restriction Requirement was mailed and received in the Office on April 18, 2005. Petitioner acknowledges a typographical error resulted in the incorrect application being provided on the response. The response contained application number 10/740,327 rather than 10/740,347. The amendment did contain the correct art unit, name of the examiner, attorney docket number, confirmation number filing date and title of invention. In support of petitioner's contention that a response was timely submitted to the Office Action, petitioner has submitted a copy of a stamped post card receipt and a copy of the response which contains a certificate of mailing pursuant to 37 CFR 1.8.

The response to the restriction requirement has been located in application 10/740,327. Based on the facts stated in the instant petition and the corroborative evidence provided, it is concluded that the holding of abandonment was improperly imposed.

The requirements for a grantable petition under 37 CFR §1.181 have been met. This petition is

hereby **Granted**.

This application is being forwarded to the Technology Center 2800 for further processing.

Telephone inquiries concerning this matter should be directed to the undersigned at (571) 272-3215.

Charlema R. Grant

Charlema R. Grant
Petition Attorney
Office of Petitions

UNITED STATES PATENT AND TRADEMARK OFFICE

COMMISSIONER FOR PATENTS
UNITED STATES PATENT AND TRADEMARK OFFICE
P.O. BOX 1450
ALEXANDRIA, VA 22313-1450
www.uspto.gov

HARNESS, DICKEY & PIERCE, P.L.C.
P.O. BOX 828
BLOOMFIELD HILLS MI 48303

COPY MAILED

MAY 18 2004

OFFICE OF PETITIONS

In re Application of :
Banker :
Filed: December 18, 2003 : ON PETITION
Application No. 10/740,350 :
Atty. Dkt. No.: 4392-000001/DVA :

This decision is in response to the "PETITION TO SUBMIT EVIDENCE OF DEPOSIT OF ALLEGED MISSING ITEMS" filed April 6, 2004 in response to the "Notice of Omitted Item(s) in a Nonprovisional Application ("Notice") mailed March 31, 2004 to accord the above-identified application a filing date of December 18, 2003.

The application was filed December 18, 2003. The Notice mailed March 31, 2004 by the Office of Initial Patent Examination notified applicant that the application had been accorded a filing date but that page 125 of the specification appeared to have been omitted from the application as filed.

In response, the present petition was filed wherein petitioner argues that the application as deposited included 147 pages, including page 125. Petitioner has included as proof of mailing and proof of receipt of page 125 a return postcard date stamped by the Office on December 18, 2003. A copy of page 125 purportedly filed with the application on December 18, 2003 was also supplied.

The original page 125 submitted with the application papers has not been located. However, in view of the evidence presented, the petition to accord the application a filing date of December 18, 2003 is GRANTED.

Since the page 125 cannot be located in the Office, the copy supplied with the instant petition will be used for examination purposes.

No petition fee is due in connection with this matter. A refund to deposit account No. 08-0750 has been requested from the Finance Office, Refund Section.

This application will be returned to the Office of Initial Patent Examination for further processing with a filing date of December 18, 2003.

Telephone inquiries related to this decision may be directed to the undersigned at (703) 305-0310.

Alesia M. Brown
Senior Petitions Attorney
Office of Petitions

UNITED STATES PATENT AND TRADEMARK OFFICE

Commissioner for Patents
United States Patent and Trademark Office
P.O. Box 1450
Alexandria, VA 22313-1450
www.uspto.gov

MILLS & ONELLO LLP
ELEVEN BEACON STREET
SUITE 605
BOSTON MA 02108

MAILED

MAY 06 2009

OFFICE OF PETITIONS

In re Application of :
BANKER, Shailen V. :
Application No. 10/740,350 : DECISION ON PETITION
Filed: December 18, 2003 : TO WITHDRAW
Attorney Docket No. **INT-0004** : FROM RECORD
:

This is a decision on the Request to Withdraw as attorney or agent of record under 37 C.F.R. § 1.36(b), filed March 31, 2009.

The request is **APPROVED**.

A grantable request to withdraw as attorney/agent of record must be signed by every attorney/agent seeking to withdraw or contain a clear indication that one attorney is signing on behalf of another/others. The Office requires the practitioner(s) requesting withdrawal to certify that he, she, or they have: (1) given reasonable notice to the client, prior to the expiration of the response period, that the practitioner(s) intends to withdraw from employment; (2) delivered to the client or a duly authorized representative of the client all papers and property (including funds) to which the client is entitled; and (3) notified the client of any responses that may be due and the time frame within which the client must respond, pursuant 37 CFR 10.40(c).

The request was signed by David M. Mello on behalf of all attorneys of record who are associated with customer No. 29344. All attorneys/agents associated have been withdrawn. Applicant is reminded that there is no attorney of record at this time.

All future correspondence will be directed to the first named inventor Shailen V. Banker at the address indicated below.

There are no outstanding office actions at this time.

Telephone inquiries concerning this decision should be directed to Michelle R. Eason at 571-272-4231.

Michelle R. Eason
Paralegal Specialist
Office of Petitions

cc: **SHAILEN V. BANKER**
3020 LINDENWOOD DRIVE
DEARBORN, MICHIGAN 48120

UNITED STATES PATENT AND TRADEMARK OFFICE

UNITED STATES DEPARTMENT OF COMMERCE
United States Patent and Trademark Office
Address: COMMISSIONER FOR PATENTS
P.O. Box 1450
Alexandria, Virginia 22313-1450
www.uspto.gov

TROP, PRUNER & HU, P.C.
1616 S. VOSS ROAD, SUITE 750
HOUSTON, TX 77057-2631

Mail Date: 07/29/2010

Applicant	: Boris E. Ginzburg	: DECISION ON REQUEST FOR
Patent Number	: 7653119	: RECALCULATION of PATENT
Issue Date	: 01/26/2010	: TERM ADJUSTMENT IN VIEW
Application No	: 10/740,353	: OF WYETH AND NOTICE OF INTENT TO
Filed	: 12/18/2003	: ISSUE CERTIFICATE OF CORRECTION
		:

The Request for Recalculation is **GRANTED** to the extent indicated.

The patent term adjustment has been determined to be **959** days. The USPTO will *sua sponte* issue a certificate of correction reflecting the amount of PTA days determined by the recalculation.

Prior to the issuance of the certificate of correction, the USPTO will afford patentee an opportunity to be heard and request reconsideration. Accordingly, patentee has **one month or thirty (30) days**, whichever is longer, to file a request for reconsideration of this patent term adjustment calculation. See 35 U.S.C. 154(b)(3)(B)(ii) and 37 CFR 1.322(a)(4). No extensions of time will be granted under 37 CFR 1.136.

Patentee should use document code PET.OP if electronically filing a request for reconsideration of this patent term adjustment calculation. The patentee must also include the information required by 37 CFR 1.705(b)(2) and the fee required by 37 CFR 1.18(e). If patentee does not file a timely request for reconsideration of this patent term adjustment calculation including the information required by 37 CFR 1.705(b)(2) and the fee required by 37 CFR 1.18(e), the USPTO will issue a certificate of correction reflecting the PTA determination noted above.

Patentee should be aware that in order to preserve the right to review in the United States District Court for the District of Columbia of the USPTO patent term adjustment determination, patentee must ensure that he or she also take the steps required under 35 U.S.C. 154(b)(4)(A) in a timely manner. Nothing in the request for recalculation should be construed as providing an alternative time frame for commencing a civil action under 35 U.S.C. 154(b)(4)(A).

Any questions concerning this decision should be directed to the Office of Patent Legal Administration at 571-272-7702.

UNITED STATES PATENT AND TRADEMARK OFFICE

Commissioner for Patents
United States Patent and Trademark Office
P.O. Box 1450
Alexandria, VA 22313-1450
www.uspto.gov

COPY MAILED

JUN 23 2006

OFFICE OF PETITIONS

TOWNSEND AND TOWNSEND AND CREW, LLP
TWO EMBARCADERO CENTER
EIGHTH FLOOR
SAN FRANCISCO, CA 94111-3834

In re Application of :
Rothbard, et. al. :
Application No. 10/740,365 :
Filed: December 17, 2003 :
Attorney Docket No. 019801-000231US :

DECISION ON REQUEST TO WITHDRAW FROM RECORD

This is a decision on the Request to Withdraw as attorney or agent of record under 37 CFR § 1.36(b), filed on December 29, 2005.

The request is **NOT APPROVED**.

A review of the file record indicates that William B. Kezer and the attorneys/agents associated with Customer No. 20350: (1) do not have power of attorney in this patent application; but (2) have been employed or otherwise engaged in the proceedings in this patent application.

Further, the Office cannot approve the request at this time since the reasons provided do not meet any of the conditions under the mandatory or permissive categories enumerated in 37 CFR 10.40. Section 10.40 of Title 37 of the Code of Federal Regulation states, "[a] practitioner shall not withdraw from employment in a proceeding before the Office without permission from the Office[.]" More specifically, 37 CFR 10.40 states, "[i]f paragraph (b) of this section is not applicable, a practitioner may not request permission to withdraw in matter pending before the Office unless such request or such withdrawal is" for one the permissive reasons listed in 37 CFR 10.40(c). The reasons set forth in the request, "discontinuation of attorney/client relationship", do not meet any the conditions set forth in 37 CFR 10.40.

There is an outstanding Office action mailed April 3, 2006 that requires a reply from the applicant.

Telephone inquires concerning this decision should be directed to Andrea Smith at 571-272-3226.

Andrea Smith
Petitions Examiner
Office of Petitions

Conferee:

cc: Robert Cerpa, Ph.D.
Morrison & Foerster
755 Page Mill Road
Palo Alto, CA 94304

UNITED STATES PATENT AND TRADEMARK OFFICE

Commissioner for Patents
United States Patent and Trademark Office
P.O. Box 1450
Alexandria, VA 22313-1450
www.uspto.gov

Cheng Law Group, PLLC
1100 17th Street, N.W.
Suite 503
Washington DC 20036

COPY MAILED

AUG 0 1 2008

In re Application of	:	
Shinichi Nagata et al.	:	
Application No. 10/740,393	:	DECISION ON PETITION
Filed: December 18, 2003	:	
Attorney Docket No. NOG-9002/REISSUE	:	

This is a decision on the petition under the CFR 1.181 to withdraw the holding of abandonment and in the alternative unintentional provisions of 37 CFR 1.137(b), filed November 28, 2006, to revive the above-identified application.

The petition under 1.181 to withdraw the holding of abandonment is **DISMISSED**.

A review of the written record indicates that the Supplemental Notice of Allowability mailed August 29, 2006 **did not** establish a new period for payment of the issue fee. In regard to MPEP 710.06, there was no incorrect citation of a reference or error in an office action affecting applicant's ability to reply that would justify resetting the period for payment. Therefore, the issue fee was still due on or before November 24, 2006.

The petition under unintentional provisions of 37 CFR 1.137(b) is **GRANTED**.

This application became abandoned for failure to timely pay the issue fee on or before November 24, 2006, as required by the Notice of Allowance and Fee(s) Due, mailed August 23, 2006. Accordingly, the date of abandonment of this application is November 25, 2006. The Notice of Abandonment was mailed March 26, 2007.

The petition satisfies the requirements of 37 CFR 1.137(b) in that petitioner has supplied (1) the reply in the form of payment of the issue fee of $1,400, (2) the petition fee of $1,500; and (3) a proper statement of unintentional delay.

The application file does not indicate a change of address has been filed in this case, although the address given on the petition differs from the address of record. A change of address should be filed in this case in accordance with MPEP 601.03. A courtesy copy of this decision is being mailed to the address noted on the petition. However, until otherwise instructed, all future correspondence regarding this application will be mailed solely to the address of record.

Telephone inquiries concerning this decision should be directed to Terri Williams at (571) 272-2991.

This application is being referred to the Office of Data Management for processing into a patent.

Chris Bottorff
Petitions Examiner
Office of Petitions

cc: **RADAR, FISHMAN, & GRAUER PLLC**
1233 20th Street, N.W.
Suite 501
Washington, DC 20036

UNITED STATES PATENT AND TRADEMARK OFFICE

Commissioner for Patents
United States Patent and Trademark Office
P.O. Box 1450
Alexandria, VA 22313-1450
www.uspto.gov

SUGHRUE MION, PLLC
2100 Pennsylvania Ave NW
SUITE 800
Washington DC 20037

MAR 28 2005

In re Application of: KAZAMA

Application No. 10/740,404
Filed: December 22, 2003
Attorney Docket No. Q79115

NOTICE OF WITHDRAWAL
FROM ISSUE
UNDER 37 CFR 1.313

The purpose of this communication is to inform you that the above identified application is being withdrawn from issue pursuant to 37 CFR 1.313.

The above-identified application is hereby withdrawn from issue. The Notice of Allowance and Issue Fee Due and the Notice of Allowability mailed February 11, 2005, are hereby vacated.

The application is being withdrawn to permit reopening of prosecution. The reasons therefor will be communicated to you by the examiner.

If the issue fee has been submitted, the applicant may request a refund, or may request that the fee be credited to a deposit account. However, applicant may wait until the application is either again found allowable or held abandoned. If the application is allowed, upon receipt of a new Notice of Allowance and Issue Fee Due, applicant may request that the previously submitted issue fee be applied toward payment of the issue fee in the amount identified on the new Notice of Allowance and Issue Fee Due. If the application is abandoned, applicant may request either a refund or a credit to a Deposit Account.

Telephone inquires should be directed to Dean Reichard at (571) 272-1984.

The above-identified application is being forwarded to the examiner for prompt appropriate action.

Richard Seidel, Director
Technology Center 2800
Semiconductors, Electrical and Optical
Systems and Components

UNITED STATES PATENT AND TRADEMARK OFFICE

COMMISSIONER FOR PATENTS
UNITED STATES PATENT AND TRADEMARK OFFICE
P.O. BOX 1450
ALEXANDRIA, VA 22313-1450
www.uspto.gov

SMART AND BIGGAR
438 UNIVERSITY AVENUE
SUITE 1500 BOX 111
TORONTO ON M5G2K-8 CA CANADA

COPY MAILED

DEC 07 2005

OFFICE OF PETITIONS

Applicant: Gauvreau et al.
Appl. No.: 10/740,416
Filing Date: December 22, 2003
Title: HITLESS MANUAL CRYTOGRAPHIC KEY REFRESH IN SECURE PACKET NETWORKS
Attorney Docket No.: 91436-387
Pub. No.: US 2005/0138352 A1
Pub. Date: June 23, 2005

This is a decision on the request for corrected of patent application publication under 37 CFR 1.221(b), filed on August 15, 2005, for the above-identified application.

The request is DISMISSED.

Applicant requests that the application be republished because the patent application publication contains material errors on the front page of the publication, as the second inventors residence "Nepean, (CA)" is misprinted as "Nepaan, (CA)" and claim 8, lines 3-4 "period and use said" is misprinted as "period and indicate use said" and claims 16, line 1 "storing instructions" is misprinted as "storing inspections."

37 CFR 1.221 (b) is applicable "only when the Office makes a material mistake which is apparent from Office records.... Any request for a corrected publication or revised patent application publication other than provided as provided in paragraph (a) of this section must be filed within two months from the date of the patent application publication. This period is not extendable." A material mistake must affect the public's ability to appreciate the technical disclosure of the patent application publication, to determine the scope of the patent application publication, or to determine the scope of the provisional rights that an applicant may seek to enforce upon issuance of a patent. [1]

The errors noted by requestor on the front page of the publication and in claims 8 and 16, wherein "Nepean, (CA)" is misprinted as "Nepaan, (CA);" "period and use said" is misprinted as "period and indicate use said" and "storing instructions" is misprinted as "storing inspections" are not material Office errors under 37 CFR 1.221. The errors noted by requestor in this published application are due to the poor quality of the text in the application. Some of the text

[1] Changes to Implement Eighteen-Month Publication of Patent Applications, 65 FR 57023, 57038 (Sept. 20, 2000), 1239, Off. Gaz. Pat. Office Notices 63, 75 (Oct. 10, 2000) (final rule).

in the application is small and blurry. The test with respect to the claims is faint and blurry and the text in the declaration is small and blurry. Applicant is advised that he or she may want to file application papers that are clearer, as the errors are due to the quality of the text. The text in the application, which is small and close together, which makes it blurry and not clear, also makes it difficult to read and to electronically reproduce by digital imaging and optical character recognition

Applicant should file applications having larger text, which is cleaner and with sufficient clarity and contrast to permit reproduction to avoid errors in the patent application publication process. See 37 CFR 1.52.

On April 1, 2004, a Filing Receipt was mailed, which did not properly list the priority information. To avoid this type of problem in the future, applicant's representative should make request for a corrected filing receipt at least 10 weeks before the projected publication date.

The applicant is advised that a "request for republication of an application previously published" may be filed under 37 CFR 1.221(a). Such a request for republication "must include a copy of the application compliance with the Office's electronic filing system requirements and be accompanied by the publication fee set forth in § 1.18(d) and the processing fee set forth in § 1.17(i)." If the request for republication does not comply with the electronic filing system requirements, the republication will not take place and the publication fee set forth in § 1.18(d) will be refunded. The processing fee will be retained.

Any request for republication under 37 CFR 1.221(a), must be submitted via the EFS system and questions or request for reconsideration of the decision, should be addressed as follows:

By mail to: Mail Stop PGPUB
Commissioner for Patents
P.O. Box 1450
Alexandria, Va. 22313-1450

By facsimile: 571-273-8300

Inquiries relating to this matter may be directed to Mark Polutta at (571) 272-7709 (voice).

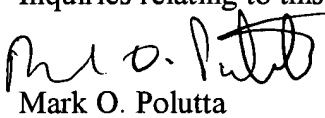

Mark O. Polutta
Senior Legal Advisor
Office of Patent Legal Administration
Office of the Deputy Commissioner
for Patent Examination Policy

UNITED STATES PATENT AND TRADEMARK OFFICE

Commissioner for Patents
United States Patent and Trademark Office
P.O. Box 1450
Alexandria, VA 22313-1450
www.uspto.gov

WESTERMAN, HATTORI, DANIELS & ADRIAN, LLP
1250 CONNECTICUT AVENUE, NW
SUITE 700
WASHINGTON, DC 20036

COPY MAILED

NOV 0 8 2004

OFFICE OF PETITIONS

In re Application of :
Manabu Kojima, et al. :
Application No. 10/740,430 : ON PETITION
Filed: December 22, 2003 :
Atty Docket No. 032200 :

This is a decision on the petition, filed November 2, 2004, under 37 CFR 1.313(c)(2) to withdraw the above-identified application from issue after payment of the issue fee.

The petition is **GRANTED**.

The above-identified application is withdrawn from issue for consideration of a submission under 37 CFR 1.114 (request for continued examination). See 37 CFR 1.313(c)(2).

Petitioner is advised that the issue fee paid on July 27, 2004 in the above-identified application cannot be refunded. If, however, the above-identified application is again allowed, petitioner may request that it be applied towards the issue fee required by the new Notice of Allowance. [1]

Telephone inquiries relating to this decision should be directed to the undersigned at (571) 272-3204.

The application is being referred to Technology Center AU 2825 for further processing of the request for continued examination under 37 CFR 1.114 filed November 2, 2004.

Sherry D. Brinkley
Petitions Examiner
Office of Petitions
Office of the Deputy Commissioner
for Patent Examination Policy

[1]The request to apply the issue fee to the new Notice may be satisfied by completing and returning the new Issue Fee Transmittal Form PTOL-85(b), which includes the following language thereon: "Commissioner for Patents is requested to apply the Issue Fee and Publication Fee (if any) or re-apply any previously paid issue fee to the application identified above." Petitioner is advised that, whether a fee is indicated as being due or not, the Issue Fee Transmittal Form **must** be completed and timely submitted to avoid abandonment. Note the language in bold text on the first page of the Notice of Allowance and Fee(s) Due (PTOL-85).

UNITED STATES PATENT AND TRADEMARK OFFICE

Commissioner for Patents
United States Patent and Trademark Office
P.O. Box 1450
Alexandria, VA 22313-1450
www.uspto.gov

CHOATE, HALL & STEWART LLP
TWO INTERNATIONAL PLACE
BOSTON MA 02110

COPY MAILED

MAR 29 2006

OFFICE OF PETITIONS

In re Application of	:	
Ying et al.	:	
Application No. 10/740,436	:	ON PETITION
Filed: December 17, 2003	:	
Attorney Docket No. 0492611-0509/MIT-10090	:	

This is a decision on the petition under 37 CFR 1.182, filed June 18, 2004, to change the order of the names of the inventors.

The petition is **GRANTED**.

The order of the names of the inventors will be changed as follows:

1. Jackie Y. Ying
2. Todd C. Zion
3. Andrey Zarur

This matter is now being referred to Technology Center 1600 for examination on the merits.

Telephone inquiries should be directed to Petitions Examiner Liana Chase at (571) 272-3282.

Frances Hicks
Petitions Examiner
Office of Petitions

Enclosure: Corrected Filing Receipt

UNITED STATES PATENT AND TRADEMARK OFFICE

COMMISSIONER FOR PATENTS
UNITED STATES PATENT AND TRADEMARK OFFICE
P.O. BOX 1450
ALEXANDRIA, VA 22313-1450
WWW.USPTO.GOV

Paper No. None

BANNER & WITCOFF
1001 G STREET N W
SUITE 1100
WASHINGTON DC 20001

COPY MAILED

AUG 0 9 2004

OFFICE OF PETITIONS

In re Application of
Richard Allen Hay and Brian Lawrence Smith
Application No. 10/740,460
Filed: December 22, 2003
Attorney Docket No.: 006393.00002
Title: FIELD DEPLOYABLE WIRELESS NETWORKING DEVICE

DECISION REFUSING STATUS
UNDER 37 C.F.R. §1.47(a)

This is in response to the petition under 37 C.F.R. §1.47(a)[1], filed June 1, 2004.

The above-identified application was filed on October 22, 2003, identifying Richard Allen Hay and Brian Lawrence Smith as joint inventors. The application was filed with a declaration which was executed only by joint inventor Hay. On March 9, 2004, applicant was mailed a "Notice to File Missing Parts of Nonprovisional Application - Filing Date Granted" (notice), requiring an executed oath or declaration in compliance with 37 C.F.R. §1.63 and the $65 surcharge for its late filing. This Notice set a two-month period for reply.

[1] A grantable petition under 37 C.F.R. §1.47(a) requires:
(1) the petition fee of $130;
(2) a surcharge of either $65 or $130 if the petition is not filed at the time of filing the application, as set forth in 37 CFR § 1.16(e);
(3) a statement of the last known address of the non-signing inventors;
(4) either
a) proof that a copy of the entire application (specification, claims, drawings, and the oath or declaration) was sent or given to the non-signing inventor for review and proof that the non-signing inventor refuses to join in the application or
b) proof that the non-signing inventor cannot be found or reached after diligent effort;
(5) a declaration which complies with 37 CFR §1.63.

In reply to the notice, applicant filed the instant petition, the petition fee, and the surcharge associated with the late filing of an oath or declaration.

Petitioner has also submitted a copy of the previously submitted declaration, a statement of facts, the last known address of the non-signing inventor, and copies of several letters.

Petitioner has met requirements (1) – (3) and (5) above.

Regarding the fourth requirement above, it is not clear whether a complete copy of the application was sent to the non-signing joint inventor. Paragraph 14 of the statement of facts sets forth that the Petitioner's secretary mailed only the declaration to the non-signing joint inventor on April 29, 2004. However, a copy of this letter has been provided with the instant petition, and the letter references an attached copy of the application. Hence, the statement of facts contradicts the text of the letter.

On renewed petition, Petitioner must indicate which of the above two scenarios is to be believed.

If the reference to the application in the letter of April 29, 2004 was a typographical error, Petitioner will need to either mail a complete copy of the application to the non-signing inventor and submit proof of the same, or submit a declaration which has been properly executed by each of the inventors. This action will be required as it follows that one cannot refuse to sign something which one has not been presented with, in that one may not refuse to join the application unless it is clear that the inventor understands exactly what he is being asked to sign and refuses to accept the application papers. It is reasonable to require that the inventor be presented with the application papers before a petition under 37 CFR §1.47 is granted since such a procedure ensures that the inventor is apprised of the application to which the oath or declaration is directed[2].

Alternatively, if the failure to make reference to a complete copy of the application in the statement of facts was an inadvertent omission, no further action need be taken in regards to providing the non-signing joint inventor with a copy of the application.

For these reasons, the petition under 37 C.F.R. §1.47(a) is **DISMISSED**.

Any response to this decision must be submitted within **TWO (2) MONTHS** from the mail date of this decision. Extensions of time under 37 CFR 1.136(a) are permitted. The renewed petition should include a cover letter entitled "Renewed Petition under 37 CFR 1.47(a)," and should display "Please deliver to Paul Shanoski, c/o Office of Petitions" in a prominent manner.

To help assure prompt and proper attention to your response, please see Request for Alert Concerning Submitted Petitions, 1282 Official Gazette (May 18, 2004) for further information on how to assist the Office in delivering your submission to the correct location. The Petitioner may wish to consider telephoning the undersigned one month after the submission is made to confirm that the documents were properly delivered.

---

2 In re Gray, 115 USPQ 80 (Comm'r Pat. 1956).

Any renewed petition may be submitted by mail[3], hand-delivery[4], or facsimile[5].

The application file will be retained in the Office of Petitions for two (2) months.

Telephone inquiries regarding *this decision* should be directed to the undersigned at (703) 305-0011. Please note that on approximately September 28, 2004, the Office of Petitions will relocate to the new PTO location in Alexandria. Although the mailing address will remain the same, the general phone number for the Office of Petitions which should be used for status requests will change to 571-272-3282, and the telephone number for the undersigned will change to 571-272-3225.

Paul Shanoski
Senior Attorney
Office of Petitions
United States Patent and Trademark Office

3 Mail Stop Petition, Commissioner for Patents, United States Patent and Trademark Office, P.O. Box 1450, Alexandria, VA, 22313-1450.

4 Customer Window, Mail Stop Petition, Crystal Plaza Two, Lobby, Room 1B03, Arlington, Virginia 22202.

5 (703) 872-9306 - please note this is a central facsimile number, and as such, there will be a delay in the delivery of the facsimile to the undersigned, which could be as much as one month.

UNITED STATES PATENT AND TRADEMARK OFFICE

COMMISSIONER FOR PATENTS
UNITED STATES PATENT AND TRADEMARK OFFICE
P.O. BOX 1450
ALEXANDRIA, VA 22313-1450
WWW.USPTO.GOV

Paper No. None

BANNER & WITCOFF
1001 G STREET N W
SUITE 1100
WASHINGTON DC 20001

COPY MAILED

SEP 0 7 2004

OFFICE OF PETITIONS

In re Application of
Richard Allen Hay and Brian Lawrence Smith
Application No. 10/740,460
Filed: December 22, 2003
Attorney Docket No.: 006393.00002
Title: FIELD DEPLOYABLE WIRELESS NETWORKING DEVICE

DECISION ON RENEWED PETITION UNDER 37 C.F.R. §1.47(a)

This is in response to the renewed petition under 37 C.F.R. §1.47(a)[1], filed August 26, 2004.

The above-identified application was filed on October 22, 2003, identifying Richard Allen Hay and Brian Lawrence Smith as joint inventors. The application was filed with a declaration which was executed only by joint inventor Hay. On March 9, 2004, applicant was mailed a "Notice to File Missing Parts of Nonprovisional Application - Filing Date Granted" (notice), requiring an executed oath or declaration in compliance with 37 C.F.R. §1.63 and the $65 surcharge for its late filing. This Notice set a two-month period for reply.

[1] A grantable petition under 37 C.F.R. §1.47(a) requires:
(1) the petition fee of $130;
(2) a surcharge of either $65 or $130 if the petition is not filed at the time of filing the application, as set forth in 37 CFR § 1.16(e);
(3) a statement of the last known address of the non-signing inventors;
(4) either
a) proof that a copy of the entire application (specification, claims, drawings, and the oath or declaration) was sent or given to the non-signing inventor for review and proof that the non-signing inventor refuses to join in the application or
b) proof that the non-signing inventor cannot be found or reached after diligent effort;
(5) a declaration which complies with 37 CFR §1.63.

In reply to the notice, applicant filed the original petition, the petition fee, and the surcharge associated with the late filing of an oath or declaration. This petition was dismissed via the mailing of a decision on August 9, 2004, for failure to establish that a complete copy of the application was sent to the non-signing inventor.

With the renewed petition, Petitioner has corrected this deficiency. As such, the petition is **GRANTED**.

The above-identified application and papers have been reviewed and found in compliance with 37 CFR 1.47(a). This application is hereby accorded Rule 1.47(a) status.

As provided in Rule 1.47(a), this Office will forward notice of this application's filing to the non-signing inventors at the addresses given in the petition. Notice of the filing of this application will also be published in the Official Gazette.

After this decision is mailed, the application will be forwarded to Technology Center 2100 for further processing.

Telephone inquiries regarding this decision should be directed to the undersigned at (703) 305-0011. Please note that on approximately September 28, 2004, the Office of Petitions will relocate to the new PTO location in Alexandria. Although the mailing address will remain the same, the general phone number for the Office of Petitions which should be used for status requests will change to 571-272-3282, and the telephone number for the undersigned will change to 571-272-3225.

Paul Shanoski
Senior Attorney
Office of Petitions
United States Patent and Trademark Office

UNITED STATES PATENT AND TRADEMARK OFFICE

COMMISSIONER FOR PATENTS
UNITED STATES PATENT AND TRADEMARK OFFICE
P.O. BOX 1450
ALEXANDRIA, VA 22313-1450
WWW.USPTO.GOV

Brian Lawrence Smith
11515 Leehigh Drive
Fairfax, VA 22030

COPY MAILED

SEP 0 7 2004

OFFICE OF PETITIONS

In re Application of :
Richard Allen Hay and Brian Lawrence Smith :
Application No. 10/740,460 :
Filed: December 22, 2003 :
Attorney Docket No.: 006393.00002 :
Title: FIELD DEPLOYABLE WIRELESS :
NETWORKING DEVICE :

LETTER

Dear Mr. Smith:

You are named as a joint inventor in the above-identified United States patent application filed under the provisions of 35 U.S.C. 116 (United States Code) and 37 CFR 1.47(a), Rules of Practice in Patent Cases. Should a patent be granted on the application you will be designated therein as a joint inventor.

As a named inventor you are entitled to inspect any paper in the file wrapper of the application, order copies of all or any part thereof (at a prepaid cost per 37 CFR 1.19) or make your position of record in the application. Alternatively, you may arrange to do any of the preceding through a registered patent attorney or agent presenting written authorization from you. If you care to join the application, agent of record (see below) would presumably assist you. Joining in the application would entail the filing of an appropriate oath or declaration by you pursuant to 37 CFR 1.63.

Telephone inquiries regarding this communication should be directed to Petitions Attorney Paul Shanoski at (703) 305-0011. Requests for information regarding your application should be directed to the File Information Unit at (703) 308-2733. Information regarding how to pay for and order a copy of the application, or a specific paper in the application, should be directed to the Certification Division at (703) 308-9726 or 1-800-972-6382 (outside the Washington D.C. area).

Paul Shanoski
Senior Attorney
Office of Petitions
United States Patent and Trademark Office

cc: BANNER & WITCOFF
1001 G STREET N W
SUITE 1100
WASHINGTON DC 20001

UNITED STATES PATENT AND TRADEMARK OFFICE

COMMISSIONER FOR PATENTS
UNITED STATES PATENT AND TRADEMARK OFFICE
P.O. BOX 1450
ALEXANDRIA, VA 22313-1450
www.uspto.gov

WEN-HAI TSAO
P.O. BOX 697
FENG-YUAN CITY 420
TAICHUNG HSIEN
TAIWAN R.O.C.

COPY MAILED

JAN 0 5 2006

OFFICE OF PETITIONS

In re Application of	:	
Wen-Hai Tsao	:	
Application No. 10/740,480	:	
Filed: December 22, 2003	:	
For: CUTTING MECHANISM MINUTE ADJUSTMENT DEVICE FOR A STONE CUTTER	:	ON PETITION

This is a decision on the Petition to request for supplement of a Notice of Allowance and the Issue Fee transmittal, filed December 8, 2004. The petition is properly treated under 37 CFR § 1.181. The delay in treating this petition is regretted.

The Petition under 37 CFR 1.137(a) is hereby **dismissed**.

Any further petition to revive the above-identified application must be submitted within TWO (2) MONTHS from the mail date of this decision. Extensions of time under 37 CFR 1.136(a) are permitted. The reconsideration request should include a cover letter entitled "Renewed Petition under 37 CFR 1.137." This is **not** final agency action within the meaning of 5 U.S.C. § 704.

The above-identified application became abandoned for failure to timely and properly reply to the Notice of Allowance and Issue Fee Due, mailed September 8, 2004. The Notice set a non-extendable three (3) month period for reply. No response having been received, the application became abandoned on December 9, 2005. The mailing of this Decision precedes the mailing of a Notice of Abandonment.

Applicant filed the instant petition wherein Applicant avers that he did not receive the Notice.

In response to Applicant's petition, the Office mailed a supplemental Notice of Allowability on October 18, 2005[1].

Applicant filed a Communication to Issue Fee on November 14, 2005, and stated that the October 18, 2005 Notice of Allowance was received; however, no Issue Fee Transmittal Form was attached, "which causes applicant unable to pay the Issue Fee due." Applicant requested an Issue Fee Transmittal "so as to enable the applicant to timely pay the Issue Fee due for the above identified application."

Applicant is advised that an allegation that an Office action was not received may form the basis for revival of an application based upon unavoidable abandonment. If the allegation is adequately supported, the petition may be granted and a new Office action mailed. The showing required to establish non-receipt of an Office communication must include:

1. A statement from the Applicant stating that the Office communication was not received by the Applicant and attesting to the fact that a search of the file jacket and docket records indicate that the Office communication was not received.

2. A copy of the file jacket or docket record where the non-received Office communication would have been entered had it been received and docketed must be attached to and referenced in Applicant's statement.

Accordingly, Applicant's assertion, that the Notice was not received, is insufficient to justify granting of the petition. Applicant must also provide a copy of the file jacket and/or docket record (or file jacket) where the non-received Notice would have been entered had it been received and docketed.

Accordingly, the petition is dismissed.

Applicant should file a Request for Reconsideration of Petition and include the necessary statements and copies of documents.

Further correspondence with respect to this matter should be addressed as follows:

---

[1] Office records do not indicate that a Supplemental Notice of Allowance was mailed.

By mail: Commissioner for Patents
PO Box 1450
Alexandria, VA 22313-1450

By FAX: (571) 273-8300
Attn: Office of Petitions

By hand: Customer Service Window
Randolph Building
401 Dulany Street
Alexandria, VA 22314

Telephone inquiries concerning this matter should be directed to the undersigned at (571) 272-3232.

Derek L. Woods
Attorney
Office of Petitions
Office of the Deputy Commissioner
for Patent Examination Policy

UNITED STATES PATENT AND TRADEMARK OFFICE

COMMISSIONER FOR PATENTS
UNITED STATES PATENT AND TRADEMARK OFFICE
P.O. BOX 1450
ALEXANDRIA, VA 22313-1450
www.uspto.gov

WEN-HAI TSAO
P.O. BOX 697
FENG-YUAN CITY 420
TAICHUNG HSIEN
TAIWAN R.O.C.

COPY MAILED

FEB 27 2006

OFFICE OF PETITIONS

In re Application of	:	
Wen-Hai Tsao	:	
Application No. 10/740,480	:	
Filed: December 22, 2003	:	
For: CUTTING MECHANISM MINUTE ADJUSTMENT DEVICE FOR A STONE CUTTER	:	ON PETITION

This is a decision on the Renewed Petition Under 37 CFR 1.137, filed January 27, 2005. The petition is properly treated under 37 CFR § 1.181.

The Petition is **granted**.

The above-identified application became abandoned for failure to timely and properly reply to the Notice of Allowance and Issue Fee Due, mailed September 8, 2004. The Notice set a non-extendable three (3) month period for reply. No response having been received, the application became abandoned on December 9, 2005. The mailing of this Decision precedes the mailing of a Notice of Abandonment.

Applicant filed a petition on December 8, 2004, to request a supplemental Notice of Allowance and the Issue Fee transmittal based upon non-receipt of the Notice. The petition was dismissed in a Decision mailed January 5, 2006, for failing to meet the requirements of a grantable petiiton under 37 CFR § 1.181.

With the instant petition Applicant has demonstrated non-receipt of the notice by a preponderance of the evidence. Applicant has also filed the issue fee with the instant petition.

The application file is being referred to Publishing Division for processing into a patent.

Telephone inquiries concerning this matter should be directed to the undersigned at (571) 272-3232.

Derek L. Woods
Attorney
Office of Petitions
Office of the Deputy Commissioner
for Patent Examination Policy

UNITED STATES PATENT AND TRADEMARK OFFICE

Commissioner for Patents
United States Patent and Trademark Office
P.O. Box 1450
Alexandria, VA 22313-1450
www.uspto.gov

STRATEGIC PATENTS P.C.
C/O PORTFOLIOIP
P.O. BOX 52050
MINNEAPOLIS MN 55402

NOV 13 2007

In re Application of: Rawls-Meehan.
Serial No.: 11/740,491
Filed: April 26, 2007
Title: METHODS AND SYSTEMS OF MOUNTING A VIBRATION MOTOR TO AN ADJUSTABLE BED

DECISION ON PETITION TO MAKE SPECIAL FOR NEW APPLICATION UNDER 37 C.F.R. § 1.102 & M.P.E.P. § 708.02

This is a decision on the request for reconsideration of petition filed on September 13, 2007 to make the above-identified application special for accelerated examination procedure under 37 C.F.R. § 1.102(d).

The petition to make the application special is GRANTED.

The application is eligible for accelerated examination and the petition complies with the conditions for granting the application special status pursuant to the "Change to Practice for Petitions in Patent Applications to Make Special and for Accelerated Examination" published June 26, 2006, in the Federal Register. (71 Fed. Reg. 36323).

The prosecution of the instant application will be conducted expeditiously according to the following guidelines.

1. The application will be docketed to an examiner and taken up for action within two weeks of the date of this decision.

2. Restriction Practice:
   If the examiner determines that the claims are not directed to a single invention, a telephone request to elect one single invention will be made pursuant to MPEP 812.01. As a prerequisite to the grant of this petition, the applicant has agreed to make an oral election, by telephone, without traverse. If the applicant refuses to make an election without traverse, or the examiner cannot reach the applicant after a reasonable effort, the examiner will treat the first claimed invention (invention defined by claim 1) as having being constructively elected without traverse for examination.

3. Office action:

If it is determined that, after appropriate consultation, there is a potential rejection or any other issue to be addressed, the examiner will telephone the applicant and arrange an interview to discuss and resolve the issue. An Office action, other than a Notice of Allowance and Fee(s) Due (Notice of Allowance), will not be issued unless either: 1) an interview was conducted but did not result in agreed to action that places the application in condition for allowance, or, 2) a determination is made that an interview would be unlikely to result in the application being placed in condition for allowance, and 3) an internal conference has been held to review any rejection of any claim.

4. Time for Reply:
An Office action other than a Notice of Allowance or a final Office action will set a shortened statutory period of one month or thirty days, whichever is longer, for reply with no extension of time available under 37 CFR 1.136(a). Failure to timely file a reply within this non-extendible period for reply will result in the abandonment of the application.

5. Reply by Applicant:
A timely reply to an Office action other than the Notice of Allowance must be submitted electronically via EFS or EFS-web and limited to addressing the rejections, objections and requirement made. Any amendment that attempts to: 1) add claims which would result in more than three pending independent claims or more than twenty pending total claims; 2) present claims not encompassed by the pre-examination search or an updated accelerated examination support document; or 3) present claims that are directed a non-elected invention or an invention other than that previously claimed and examined in the application, will be treated as not fully responsive and will not be entered.

For any amendment to the claims (including any new claim) that is not encompassed by the pre-examination search or the accelerated examination support document, applicant must provide an updated pre-examination search and accelerated examination support document that encompasses the amended or new claims at the time of filing of the amendment.

To proceed expeditiously with the examination, it is recommended that a reply with amendments made to any claim or with any new claim being added be accompanied by an updated accelerated examination support document or a statement explaining how the amended or new claim is supported by the original pre-examination search and accelerated examination support document.

6. Information Disclosure Statement (IDS):
Any IDS filed during prosecution must be submitted electronically via EFS or EFS-web, accompanied by an updated accelerated examination support document, and be in compliance with 37 CFR 1.97 and 1.98.

7. Post-Allowance Processing:
   To expedite processing of the allowed application into a patent, the applicant must: 1) pay the required fees within one month of the date of the Notice of Allowance, and 2) not file any post allowance papers not required by the Office. In no event may the issue fee be paid and accepted later than three months from the date of the Notice of Allowance.

8. After-Final and Appeal Procedures:
   To expedite prosecution, after receiving the final Office action, applicant must: 1) promptly file a notice of appeal, an appeal brief and appeal fees; and 2) not request a pre-appeal brief conference.

   Any amendment, affidavit or other evidence filed after final Office action must comply with applicable rules and the requirements outlined in numbered paragraphs 5 and 6 above.

   On appeal, the application will proceed according to normal appeal procedures. After appeal, the application will again be treated special.

9. Proceedings Outside the Normal Examination Process:
   If the application becomes involved in a proceeding that is outside the normal examination process (e.g., a secrecy order, national security review, interference proceeding, petitions under 37 CFR 1.181, 182 or 183), the application will be treated special before and after such proceeding.

10. Final Disposition:
    The twelve month goal of this accelerated examination procedure ends with a final disposition. The mailing of a final Office action, a Notice of Allowance, the filing of a Notice of Appeal, or the filing of a Request for Continued Examination (RCE) is the final disposition.

If, during prosecution, a paper is not filed electronically using EFS-web, a reply is filed but is not fully responsive, the application is involved in an appeal, or a proceeding outside normal examination process, the application will still be examined expeditiously; however, the final disposition may occur more than twelve months from the filing of the application.

Any inquiry regarding this decision should be directed to J. Harrison, Special Program Examiner, at (571) 272-4449.

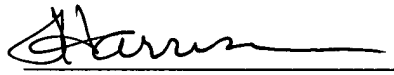

J. Harrison, Special Program Examiner
Technology Center 3700

UNITED STATES PATENT AND TRADEMARK OFFICE

COMMISSIONER FOR PATENTS
UNITED STATES PATENT AND TRADEMARK OFFICE
P.O. BOX 1450
ALEXANDRIA, VA 22313-1450
www.uspto.go

VENABLE, BAETJER, HOWARD AND CIVILETTI, LLP
P.O. BOX 34385
WASHINGTON DC 20043-9998

MAIL

SEP 15 2004

DIRECTOR OFFICE
TECHNOLOGY CENTER 2600

In re Application of:
Geoffrey ENGAL, et al.
Application No.: 10/740,511
Filed: December 22, 2003
For: MASTER-SLAVE AUTOMATED VIDEO-BASED SURVEILLANCE SYSTEM

DECISION ON PETITION
TO MAKE SPECIAL

This is a decision on the petition, filed December 22, 2003 under 37 C.F.R. §102(d) and M.P.E.P. §708.02(XI): Inventions For Countering Terrorism, to make the above-identified application special.

M.P.E.P. §708.02 (XI), which sets out the prerequisites for a grantable petition for Inventions For Countering Terrorism under 37 C.F.R. § 102(d), states in relevant part:

> International terrorism as defined in 18 U.S.C. 2331 includes "activities that - (A) involve violent acts or acts dangerous to human life that are a violation of the criminal laws of the United States or of any State, or that would be a criminal violation if committed within the jurisdiction of the United States or of any State; [and] (B) appear to be intended - (i) to intimidate or coerce a civilian population; (ii) to influence the policy of a government by intimidation or coercion; or (iii) to affect the conduct of a government by assassination or kidnapping..." The types of technology for countering terrorism could include, but are not limited to, systems for detecting/identifying explosives, aircraft sensors/security systems, and vehicular barricades/disabling systems.
>
> Applicants who desire that an application relating to inventions for countering terrorism be made special should file a petition with the petition fee under 37 CFR 1.17(h) requesting the Patent and Trademark Office to make the application special. The petition for special status should be accompanied by a statement explaining how the invention contributes to countering terrorism.

Petitioner's submission fails to meet the criteria set out with respect to countering terrorism in M.P.E.P. §708.02(XI). The specification and claims as originally filed provide no indication of an intention to counter terrorism by providing a video based surveillance system. The claimed invention fails to indicate countering terrorism. Further steps would be required to actually offset or nullify terrorism, yet no suggestion of "countering terrorism" is found in the disclosure. As a result, no advancement in the technology of countering terrorism has been persuasively shown.

Accordingly the Petition is **DENIED**.

Any request for reconsideration must be filed within two months of the mailing date of this decision.

It is suggested that applicant review M.P.E.P. §708.02 regarding other grounds available for filing a petition to make special. In particular, note M.P.E.P. §708.02(VIII): Accelerated Examination, which does not place limitations on the subject matter of the application.

Kenneth A. Wieder
Special Program Examiner
Technology Center 2600
Communications

UNITED STATES PATENT AND TRADEMARK OFFICE

COMMISSIONER FOR PATENTS
UNITED STATES PATENT AND TRADEMARK OFFICE
P.O. BOX 1450
ALEXANDRIA, VA 22313-1450
www.uspto.gov

JUN 26 2006

In re Application of HOFF ET AL.
Appl. No.: 10/740,519
Filed: December 22, 2003
For: POWER SYSTEM

WITHDRAWAL OF RESTRICTION REQUIREMENT
37 CFR 1.1444 & 1.181

This is in response to applicant's petition filed 4/10/06 requesting withdrawal of the restriction/election of species requirement.

Applicants' petition is GRANTED.

Petitioner states that the claims presented in the above named application are not identified with distinct species as set forth in the Requirement for Restriction mailed 12/15/05. A review of the record finds that there are, in fact, no species set forth and that the restriction based on such was improper.

Accordingly, the previous office action, mailed 3/17/06, which included an action on the merits of claims 1, 5-11, 15-18 and 21-23, elected with traverse, is withdrawn. A new action on the merits will follow.

The application is being forwarded to the examiner for action. Inquiries concerning this decision should be directed to Supervisory Patent Examiner Darren Schuberg at (571) 272-2044.

Richard Seidel, Director
Patent Examining Technology Center 2800

FINNEGAN, HENDERSON, FARABOW, GARRETT & DUNNER
LLP
901 NEW YORK AVENUE, NW
WASHINGTON, DC 20001-4413

UNITED STATES PATENT AND TRADEMARK OFFICE

Commissioner for Patents
United States Patent and Trademark Office
P.O. Box 1450
Alexandria, VA 22313-1450
www.uspto.gov

JJGJr: 03-06

Paper No: __

BURNS, DOANE,
SWECKER & MATHIS, L.L.P.
P.O. BOX 1404
Alexandria VA 22313-1404

COPY MAILED
MAR 3 0 2006
OFFICE OF PETITIONS

In re Patent No. 6,953,716 :
Issue Date:11 October, 2005 :
Application No. 10/740,537 : ON PETITION
Filed: 22 December, 2003 :
Attorney Docket No.: 016660-040 :

This is a decision on the petition filed on 10 February, 2006, requesting issuance of duplicate Letters Patent for the above-identified application under 37 C.F.R. §1.182.[1]

The petition is **GRANTED**.

The Publishing Division is directed to issue duplicate Letters Patent.

A copy of this decision is being forwarded to Publishing Division for issuance of duplicate Letters Patent.

The file is being released to the IFW Repository.

---

[1] The regulations at 37 C.F.R. §1.182 provide:
§ 1.182 Questions not specifically provided for.
All situations not specifically provided for in the regulations of this part will be decided in accordance with the merits of each situation by or under the authority of the Commissioner, subject to such other requirements as may be imposed, and such decision will be communicated to the interested parties in writing. Any petition seeking a decision under this section must be accompanied by the petition fee set forth in § 1.17(h). [47 Fed. Reg. 41278, Sept. 17, 1982, effective date Oct. 1, 1982; revised, 62 Fed. Reg. 53131, Oct. 10, 1997, effective Dec. 1, 1997]

Any questions regarding the issuance of the duplicate Letters Patent should be directed to Ms. Krystal Paige, OPPD, South Tower 8C32, Phone (703) 308-9250, ext 139; FAX (571) 273-9756.

Telephone inquiries concerning this decision may be directed to the undersigned at (571) 272-3214.

John J. Gillon, Jr.
Senior Attorney
Office of Petitions

cc: Ms. Krystal Paige, ST/8C32 FAX: (571) 273-9756

UNITED STATES PATENT AND TRADEMARK OFFICE

COMMISSIONER FOR PATENTS
UNITED STATES PATENT AND TRADEMARK OFFICE
P.O. BOX 1450
ALEXANDRIA, VA 22313-1450
www.uspto.gov

Paper No.

OBLON, SPIVAK, MCCLELLAND,
MAIER & NEUSTADT, P.C.
1940 DUKE STREET
ALEXANDRIA, VA 22314

COPY MAILED

MAY 2 0 2004

OFFICE OF PETITIONS

In re Application of :
Delledonne et al. :
Application No. 10/740,574 :
Filed: December 22, 2003 : ON PETITION
Attorney Docket No. :
244663US0 :

This is a decision on the Petition Under 37 CFR 1.53(e)(2), filed April 8, 2004, requesting the above-identified application be accorded a filing date of December 22, 2003.

The petition is granted.

The application was filed on December 22, 2003. On March 23, 2004, the Office of Initial Patent Examination mailed a Notice of Incomplete Provisional Application (hereinafter "Notice") stating, *inter alia*, that the application had not been accorded a filing date because the application had been deposited without drawings.

Applicant responds with the instant petition wherein Applicant avers that the drawings are not necessary for an understanding of the invention, and are not required under 35 U.S.C. § 113.

A review of the file reveals that Petitioner is correct - the specification contains process claims. As stated in MPEP § 601.01(f), it is the practice of the PTO to treat an application that contains at least one process or method claim as an application for which a drawing is not necessary for an understanding of the invention under 35 U.S.C. § 113 (first sentence). The same process has been followed in composition applications (claim three is a composition claim).

MPEP § 601.01(f) also states that:

> A nonprovisional application having at least one claim, or a provisional application having at least some disclosure, directed to the subject matter discussed above for which a drawing is usually not considered essential for a filing date, describing drawing figure(s) in the specification, but filed without drawings will be treated as an application filed without all of the drawing figures referred to in the specification as discussed in MPEP § 601.01(g), so long as the application contains something that can be construed as a written description.

This application contains process and composition claims; therefore, the application should have been treated as an application filed without all of the drawing figures referred to in the specification as discussed in MPEP § 601.01(g).

In view of the above, the Notice mailed March 23, 2004, was mailed in error and is hereby withdrawn.

This application is being forwarded to the Office of Initial Patent Examination, Customer Corrections, for further processing, with the filing date of December 22, 2003, and an indication that no drawings were required nor present on filing.

No petition fee has been charged and none is due.

Telephone inquiries concerning this matter should be directed to the undersigned at (703) 305-0014.

Derek L. Woods
Petitions Attorney
Office of Petitions