UNITED STATES PATENT AND TRADEMARK OFFICE

Commissioner for Patents
United States Patent and Trademark Office
P.O. Box 1450
Alexandria, VA 22313-1450
www.uspto.gov

RIDOUT & MAYBEE
SUITE 2400
ONE QUEEN STREET EAST
TORONTO ON M5C3B-1 CA CANADA

COPY MAILED

APR 0 3 2007

OFFICE OF PETITIONS

In re Application of :
Adams et al. :
Application No. 10/787,239 : ON PETITION
Filed: February 27, 2004 :
Attorney Docket No. 42783-0045 :

This is a decision on the petition under 37 C.F.R. § 1.137(b), filed February 2, 2007, to revive the above-identified application.

The petition is **GRANTED.**

The petition satisfies the conditions for revival pursuant to the provisions of 37 CFR 1.137(b) in that (1) the reply in the form of payment of the issue and publication fees; (2) the petition fee; and (3) the required statement of unintentional delay have been received. Accordingly, the response has been accepted as having been unintentionally delayed.

There is no indication that petitioner has submitted an Issue Fee Transmittal Form (PTOL-85b). Accordingly, if petitioner desires to have the information normally found thereon printed on the patent, the attached blank Issue Fee Transmittal Form should be completed and returned to the Publishing Division within **ONE MONTH** from the mail date of this decision.

This matter is being referred to the Publishing Division for processing into a patent.

Telephone inquiries regarding this decision should be directed to the undersigned at (571) 272-3206.

Liana Walsh
Petitions Examiner
Office of Petitions

Enclosure: PTOL-85b

PART B - FEE(S) TRANSMITTAL

Complete and send this form, together with applicable fee(s), to: Mail **Mail Stop ISSUE FEE**
Commissioner for Patents
P.O. Box 1450
Alexandria, Virginia 22313-1450
or Fax (571)-273-2885

INSTRUCTIONS: This form should be used for transmitting the ISSUE FEE and PUBLICATION FEE (if required). Blocks 1 through 5 should be completed where appropriate. All further correspondence including the Patent, advance orders and notification of maintenance fees will be mailed to the current correspondence address as indicated unless corrected below or directed otherwise in Block 1, by (a) specifying a new correspondence address; and/or (b) indicating a separate "FEE ADDRESS" for maintenance fee notifications.

CURRENT CORRESPONDENCE ADDRESS (Note: Use Block 1 for any change of address)

Note: A certificate of mailing can only be used for domestic mailings of the Fee(s) Transmittal. This certificate cannot be used for any other accompanying papers. Each additional paper, such as an assignment or formal drawing, must have its own certificate of mailing or transmission.

Certificate of Mailing or Transmission

I hereby certify that this Fee(s) Transmittal is being deposited with the United States Postal Service with sufficient postage for first class mail in an envelope addressed to the Mail Stop ISSUE FEE address above, or being facsimile transmitted to the USPTO (571) 273-2885, on the date indicated below.

(Depositor's name)
(Signature)
(Date)

APPLICATION NO.	FILING DATE	FIRST NAMED INVENTOR	ATTORNEY DOCKET NO.	CONFIRMATION NO.

TITLE OF INVENTION:

APPLN. TYPE	SMALL ENTITY	ISSUE FEE DUE	PUBLICATION FEE DUE	PREV. PAID ISSUE FEE	TOTAL FEE(S) DUE	DATE DUE

EXAMINER	ART UNIT	CLASS-SUBCLASS

1. Change of correspondence address or indication of "Fee Address" (37 CFR 1.363).

☐ Change of correspondence address (or Change of Correspondence Address form PTO/SB/122) attached.

☐ "Fee Address" indication (or "Fee Address" Indication form PTO/SB/47; Rev 03-02 or more recent) attached. **Use of a Customer Number is required.**

2. For printing on the patent front page, list

(1) the names of up to 3 registered patent attorneys or agents OR, alternatively,

(2) the name of a single firm (having as a member a registered attorney or agent) and the names of up to 2 registered patent attorneys or agents. If no name is listed, no name will be printed.

1 _____

2 _____

3 _____

3. ASSIGNEE NAME AND RESIDENCE DATA TO BE PRINTED ON THE PATENT (print or type)

PLEASE NOTE: Unless an assignee is identified below, no assignee data will appear on the patent. If an assignee is identified below, the document has been filed for recordation as set forth in 37 CFR 3.11. Completion of this form is NOT a substitute for filing an assignment.

(A) NAME OF ASSIGNEE (B) RESIDENCE: (CITY and STATE OR COUNTRY)

Please check the appropriate assignee category or categories (will not be printed on the patent) : ☐ Individual ☐ Corporation or other private group entity ☐ Government

4a. The following fee(s) are submitted:

☐ Issue Fee

☐ Publication Fee (No small entity discount permitted)

☐ Advance Order - # of Copies _____

4b. Payment of Fee(s): **(Please first reapply any previously paid issue fee shown above)**

☐ A check is enclosed.

☐ Payment by credit card. Form PTO-2038 is attached.

☐ The Director is hereby authorized to charge the required fee(s), any deficiency, or credit any overpayment, to Deposit Account Number _____ (enclose an extra copy of this form).

5. **Change in Entity Status** (from status indicated above)

☐ a. Applicant claims SMALL ENTITY status. See 37 CFR 1.27.

☐ b. Applicant is no longer claiming SMALL ENTITY status. See 37 CFR 1.27(g)(2).

NOTE: The Issue Fee and Publication Fee (if required) will not be accepted from anyone other than the applicant; a registered attorney or agent; or the assignee or other party in interest as shown by the records of the United States Patent and Trademark Office.

Authorized Signature _____ Date _____

Typed or printed name _____ Registration No. _____

This collection of information is required by 37 CFR 1.311. The information is required to obtain or retain a benefit by the public which is to file (and by the USPTO to process) an application. Confidentiality is governed by 35 U.S.C. 122 and 37 CFR 1.14. This collection is estimated to take 12 minutes to complete, including gathering, preparing, and submitting the completed application form to the USPTO. Time will vary depending upon the individual case. Any comments on the amount of time you require to complete this form and/or suggestions for reducing this burden, should be sent to the Chief Information Officer, U.S. Patent and Trademark Office, U.S. Department of Commerce, P.O. Box 1450, Alexandria, Virginia 22313-1450. DO NOT SEND FEES OR COMPLETED FORMS TO THIS ADDRESS. SEND TO: Commissioner for Patents, P.O. Box 1450, Alexandria, Virginia 22313-1450.

Under the Paperwork Reduction Act of 1995, no persons are required to respond to a collection of information unless it displays a valid OMB control number.

UNITED STATES PATENT AND TRADEMARK OFFICE

COMMISSIONER FOR PATENTS
UNITED STATES PATENT AND TRADEMARK OFFICE
P.O. BOX 1450
ALEXANDRIA, VA 22313-1450
www.uspto.gov

MAIL

SEP 2 9 2004

DIRECTOR OFFICE
TECHNOLOGY CENTER 2600

STEVENS DAVIS MILLER & MOSHER, LLP
1615 L STREET, NW
SUITE 850
WASHINGTON DC 20036

In re Application of :
Timothy G. Beard, et al. :
Application No. 10/787,243 : DECISION ON PETITION
Filed: February 27, 2004 : TO MAKE SPECIAL
For: EXTENDED DYNAMIC RESOURCE :
ALLOCATION IN PACKET DATA TRANSFER :

This is a decision on the petition filed June 4, 2004 under Manual of Patent Examination Procedure §708.02, VIII requesting accelerated examination. This decision is also responsive to the supplemental facsimile filed August 7, 2004 providing a copy of a missing prior art document.

The petition under Manual of Patent Examination Procedure §708.02, VIII, must:
(1) be filed prior to receiving any examination by the examiner,
(2) be accompanied by the required fee- $130,
(3) the claims should be directed to a single invention (if it is determined that the claims pertain to more than one invention, then applicant will have to make an election without traverse or forfeit accelerated examination status),
(4) state that a pre-examination search was made, and fully discuss the search method employed, such as classes and subclasses searched, publications, Chemical abstracts, patents, etc. A search made by a foreign patent office satisfies this requirement,
(5) be accompanied by a copy of each of the references most closely related to the subject matter encompassed by the claims if said references are not already of record,
(6) fully discuss the references, pointing out with the particularity required by 37 C.F.R. §1.111 (b) and (c), how the claimed subject matter is patentable over the references.

The petitioner meets all the above-listed requirements. Accordingly, the petition is **GRANTED**.

The application will retain its special status throughout its entire prosecution, including any appeal to the Board of Patent Appeals and Interferences, subject only to diligent prosecution by the applicant. The application file is being forwarded to the examiner for appropriate action in due course.

Krista Zele
Special Program Examiner
Technology Center 2600
Communications

UNITED STATES PATENT AND TRADEMARK OFFICE

Commissioner for Patents
United States Patent and Trademark Office
P. O. Box 1450
Alexandria, VA 22313-1450
www.uspto.gov

SMITH GAMBRELL & RUSSELL
1130 CONNECTICUT AVENUE, N.W., SUITE 1130
WASHINGTON, DC 20036

COPY MAILED

FEB 15 2008

OFFICE OF PETITIONS

In re Application of :
Ian McCregor Slothers et al :
Application No. 10/787,251 : ON PETITION
Filed: February 27, 2004 :
Attorney Docket No. :

This is a decision on the petition under 37 CFR 1.137(b), filed October 10, 2007, to revive the above-identified application.

The petition is **GRANTED**.

The above-identified application became abandoned for failure to reply in a timely manner to the non-final Office action mailed January 26, 2007, which set a shortened statutory period for reply of three (3) months. No extension of time under the provisions of 37 CFR 1.136(a) were obtained. Accordingly, the above-identified application became abandoned on April 27, 2007.

There is no indication that the person signing the instant petition was ever given a power of attorney or authorization of agent to prosecute the above-identified application. If the person signing the instant petition desires to receive future correspondence regarding this application, the appropriate power of attorney or authorization of agent must be submitted. While a courtesy copy of this decision is being mailed to the person signing the instant petition, all future correspondence will be directed to the address currently of record until such time as appropriate instructions are received to the contrary.

Telephone inquiries concerning this decision should be directed to Irvin Dingle at (571) 272-3210.

This matter is being referred to Technology Center AU 2863 for further processing.

Irvin Dingle
Petitions Examiner
Office of Petitions

cc: Cantor Colburn, LLP
1180 Peachtree Street N.E., Suite 2050
Atlanta, GA 30309

UNITED STATES PATENT AND TRADEMARK OFFICE

COMMISSIONER FOR PATENTS
UNITED STATES PATENT AND TRADEMARK OFFICE
P.O. BOX 1450
ALEXANDRIA, VA 22313-1450
www.uspto.gov

MAIL

SEP 2 9 2004

DIRECTOR OFFICE
TECHNOLOGY CENTER 2600

STEVENS DAVIS MILLER & MOSHER, LLP
1615 L STREET, NW
SUITE 850
WASHINGTON DC 20036

In re Application of :
David E. Cooper :
Application No. 10/787,258 :
Filed: February 27, 2004 :
For: DYNAMIC RESOURCE ALLOCATION IN PACKET DATA TRANSFER :

DECISION ON PETITION TO MAKE SPECIAL

This is a decision on the petition filed June 4, 2004 under Manual of Patent Examination Procedure §708.02, VIII requesting accelerated examination. This decision is also responsive to the supplemental facsimiles filed July 26, 2004 and August 23, 2004 providing copies of missing prior art documents.

The petition under Manual of Patent Examination Procedure §708.02, VIII, must:
(1) be filed prior to receiving any examination by the examiner,
(2) be accompanied by the required fee- $130,
(3) the claims should be directed to a single invention (if it is determined that the claims pertain to more than one invention, then applicant will have to make an election without traverse or forfeit accelerated examination status),
(4) state that a pre-examination search was made, and fully discuss the search method employed, such as classes and subclasses searched, publications, Chemical abstracts, patents, etc. A search made by a foreign patent office satisfies this requirement,
(5) be accompanied by a copy of each of the references most closely related to the subject matter encompassed by the claims if said references are not already of record,
(6) fully discuss the references, pointing out with the particularity required by 37 C.F.R. §1.111 (b) and (c), how the claimed subject matter is patentable over the references.

The petitioner meets all the above-listed requirements. Accordingly, the petition is **GRANTED**.

The application will retain its special status throughout its entire prosecution, including any appeal to the Board of Patent Appeals and Interferences, subject only to diligent prosecution by the applicant. The application file is being forwarded to the examiner for appropriate action in due course.

Krista Zele
Special Program Examiner
Technology Center 2600
Communications

UNITED STATES PATENT AND TRADEMARK OFFICE

Commissioner for Patents
United States Patent and Trademark Office
P.O. Box 1450
Alexandria, VA 22313-1450
www.uspto.gov

JOHN M. CARD
BRINKS HOFER GILSON & LIONE
P.O. BOX 10395
CHICAGO, IL 60610

COPY MAILED
MAY 10 2005
OFFICE OF PETITIONS

In re Application of :
Bonglea Kim :
Application No. 10/787,264 : ON PETITION
Filed: February 26, 2004 :
Attorney Docket No. 10544-202 :

This is a decision on the petition under 37 CFR 1.313(c), filed April 29, 2005, which is being treated under 37 CFR 1.313(c)(2), to withdraw the above-identified application from issue after payment of the issue fee.

The petition is **GRANTED**.

The above-identified application is withdrawn from issue for consideration of a submission under 37 CFR 1.114 (request for continued examination). See 37 CFR 1.313(c)(2).

Petitioner is advised that the issue fee paid on March 16, 2005 in the above-identified application cannot be refunded. If, however, the above-identified application is again allowed, petitioner may request that it be applied towards the issue fee required by the new Notice of Allowance.[1]

Telephone inquiries should be directed to Wan Laymon at (571) 272-3220.

This matter is being referred to Technology Center AU 2882 for processing of the request for continued examination under 37 CFR 1.114.

Wan Laymon
Petitions Examiner
Office of Petitions
Office of the Deputy Commissioner
for Patent Examination Policy

[1] The request to apply the issue fee to the new Notice may be satisfied by completing and returning the new Issue Fee Transmittal Form PTOL-85(b), which includes the following language thereon: "Commissioner for Patents is requested to apply the Issue Fee and Publication Fee (if any) or re-apply any previously paid issue fee to the application identified above." Petitioner is advised that, whether a fee is indicated as being due or not, the Issue Fee Transmittal Form **must** be completed and timely submitted to avoid abandonment. Note the language in bold text on the first page of the Notice of Allowance and Fee(s) Due (PTOL-85).

UNITED STATES PATENT AND TRADEMARK OFFICE

Commissioner for Patents
United States Patent and Trademark Office
P.O. Box 1450
Alexandria, VA 22313-1450
www.uspto.gov

July 2005

EDWARDS & ANGELL, LLP
INTELLECTUAL PROPERTY PRACTICE GROUP
P.O. BOX 55874
BOSTON, MA 02205

AUG 26 2005

In re Application of:
CHIEN-PING HUANG
Serial No.: 10/787,269
Filed: 25 February 2004
Docket: 58102-DIV (71987)
Title: SEMICONDUCTOR PACKAGE WITH HEAT DISSIPATING STRUCTURE

DECISION ON PETITION TO MAKE SPECIAL UNDER 37 C.F.R. § 1.102(d)

This is a decision on the petition filed on March 8, 2005, to make the above-identified application special under the accelerated examination procedure set forth in MPEP § 708.02(VIII) in accordance with 37 C.F.R. § 1.102(d).

The petition to make the application special is **DISMISSED**.

In support of the petition, petition provides: a) the applicable petition fee; b) a statement that all claims are directed to a single invention, and that any election later required will be made without traverse; c) a statement that a pre-examination search was made, including the search areas; and d) a discussion of the teaching of some of the references.

For accelerated examination under MPEP § 708.02(VIII) in accordance with 37 C.F.R. § 1.102(d), a showing of the following is required: a) a petition to make special accompanied by the applicable petition fee; b) all claims are directed to a single invention; c) a statement that a pre-examination search was made, including the search areas; d) a copy of each of the references deemed most closely related to the claimed subject matter; and e) a detailed discussion of the references pointing out with the particularity required by 37 CFR 1.111 (b) and (c), how the claimed subject matter is distinguishable over the references.

The requirements of MPEP § 708.02(VIII)(a), (c), and (d) are considered to have been met. However, petitioner fails to point out with the particularity required by 37 CFR § 1.111 (b) and (c), how the claimed subject matter is distinguishable over the *each* of the references. Therefore, petitioner fails to meet the requirement of MPEP § 708.02(VIII)(e).

37 CFR § 1.111 (b) states"[a] general allegation that the claims define a patentable invention without specifically pointing out how the language of the claims patentably distinguishes them from the references does not comply with the requirements of this section." 37 CFR § 1.111 (c) states in part "the applicant or patent owner must clearly point out the patentable novelty which he or she thinks the claims present in view of the state of the art disclosed by the references cited or the objections made."

Petitioner presents a summary of the invention. Petitioner presents a detailed discussion of the supplied references. However, a detailed discussion of how each of the references overcomes *each* of the independent claims is required for the petition to be granted. For example, in the discussion of the Lai reference, petitioner states that Lai does not teach or suggest "any gold wires...outside the area covered by the heat sink." While this is directed towards the limitations of claim 1, which require the conductive elements to extend outside the area covered by the heat sink, claim 29 does not require this limitation. Consequently, petitioner has not provided a detailed discussion how the language of claim 29 patentably distinguishes itself from the Lai reference.

While Technology Center Directors may have granted petitions that do not comply with the detailed discussion requirement of the Accelerated Examination procedure, Technology Center Director decisions on petitions are not binding precedent of the Patent Examining Corps, and the application of an improper standard in certain cases does not require the Office to continue to apply the improper standard in all cases. *See In re The Boulevard Entertainment, Inc.*, 334 F.3d 1336, 1343, 67 USPQ2d 1475, 1480 (Fed. Cir. 2003)).

For the above-mentioned reasons, the petition is dismissed. The application will therefore be taken up by the examiner for action in its regular turn.

Any request for reconsideration of this decision must be submitted within 2 (two) months of the date of this decision in order to be considered timely. Any resubmission of the petition must address each of the independent claims, and provide a detailed discussion of how each of the independent claims is not met by each of the references presented as relevant.

Any inquiry regarding this decision should be directed to Hien H. Phan, Special Program Examiner, at (571) 272-1606.

Hien H. Phan, Special Program Examiner
Technology Center 2800 - Semiconductors,
Electrical & Optical Systems & Components

UNITED STATES PATENT AND TRADEMARK OFFICE

Commissioner for Patents
United States Patent and Trademark Office
P.O. Box 1450
Alexandria, VA 22313-1450
www.uspto.gov

December 2005

FEB
~~MAR~~ 2 3 2006

EDWARDS & ANGELL, LLP
P.O.Box 55874
Boston, MA 02205

In re Application of: CHIEN-PING HUANG Serial No.: 10/787,269 Filed: 25 February 2004 Docket: 58102-DIV (71987) Title: SEMICONDUCTOR PACKAGE WITH HEAT DISSIPATING STRUCTURE	DECISION ON REQUEST FOR RECONSIDERATION TO MAKE SPECIAL UNDER 37 C.F.R. § 1.102 & M.P.E.P. § 708.02 (VIII)

This is a decision on the request for reconsideration filed on October 26th, 2005 of the decision dated August 26th, 2005 dismissing the petition to make the above-identified application special under the accelerated examination procedure set forth in MPEP § 708.02(VIII) and in accordance with 37 C.F.R. § 1.102(d).

The petition to make the application special is **GRANTED**.

In the request for reconsideration, petitioner provides a discussion of how each of the references distinguishes over each of the independent claims 16, 29 and 38, thus meeting the requirement of MPEP § 708.02(VIII)(e). The requirements of MPEP § 708.02(VIII)(a), (c) and (d) were considered to have been met in the preceding decision. The original petition filed on March 8th, 2005 also meets the requirement of MPEP § 708.02(VIII)(b).

Therefore, the requirements of MPEP § 708.02(VIII)(a)-(e) having been met, the application will be advanced out of turn for examination, and will continue to be treated as special throughout the entire prosecution in the Office according to the procedure set forth in MPEP § 708.02. Any restriction later required by the Office must be responded to with an election without traverse by applicant as a condition for the application retaining its special status.

The application file is being forwarded to the examiner for expedited prosecution.

If the examiner can make this application special without prejudice to any possible interfering applications, and he/she should make a rigid search for such, he/she is authorized to do so for the next action. Should the application be rejected, the application will not be considered special for

the subsequent action unless the applicant promptly makes a bona fide effort to place the application in condition for allowance, even if it is necessary to have an interview with the examiner to accomplish this purpose.

If the examiner finds any interfering application for the same subject matter, he/she should consider such application simultaneously with this application and should state in the official letter of such application that he/she is taking it out of its turn because of possible interference.

Should an appeal be taken in this application or should this application become involved in an interference, consideration of the appeal and the interference will be expedited by all Patent and Trademark Office officials concerned, contingent likewise upon diligent prosecution by the applicant.

Any inquiry regarding this decision should be directed to Hien H. Phan, Special Program Examiner, at (571) 272-1606.

Hien H. Phan, Special Program Examiner
Technology Center 2800 - Semiconductors,
Electrical & Optical Systems & Components

UNITED STATES PATENT AND TRADEMARK OFFICE

COMMISSIONER FOR PATENTS
UNITED STATES PATENT AND TRADEMARK OFFICE
P.O. BOX 1450
ALEXANDRIA, VA 22313-1450
www.uspto.gov

Paper No.

Toby H. Kusmer
McDermott, Will & Emery
28 State Street
Boston, MA 02109

COPY MAILED

SEP 16 2004

OFFICE OF PETITIONS

In re Application of :
John Dobbs :
Application No. 10/787,270 :
Filed: February 26, 2004 : ON PETITION
Attorney Docket Number: :
56230-594(ANA-246) :

This is in response to the correspondence entitled Response to Notice of Omitted Item(s) in a Nonprovisional Application, filed August 10, 2004. The correspondence is properly treated as a petition under 37 CFR 1.53[1].

Application papers in the above-identified application were filed on February 26, 2004. On July 30, 2004, the Office of Initial Patent Examination mailed a Notice of Omitted Item(s) in a Nonprovisional Application ("Notice"), indicating, *inter alia*, that Figures 5a and 5b described in the specification appeared to have been omitted from the application. The Notice set a two-month period for reply, with extensions of time available under 37 CFR § 1.136(a).

In response, Applicant files the instant correspondence wherein Applicant avers that Figures 5a and 5b were not omitted from the application, but merely referenced in error in the specification.

---

[1] The mailing of a 'Notice of Omitted Item(s)' will permit the applicant to either: (1) promptly establish prior receipt in the USPTO of the drawing(s) at issue (generally by way of date-stamped postcard receipt (MPEP 503)) (by filing a petition under 37 CFR 1.53); (2) promptly submit the omitted drawing(s) in a nonprovisional application and accept the date such submission as the application filing date (by filing a petition under 37 CFR 1.182); or (3) "accept the application as deposited in the USPTO [and not] respond to the 'Notice of Omitted Item(s)'", thereby constructively accepting the application as deposited with this Office. Amendment of the specification is required . . . to cancel all references to the omitted drawing[s]. . . ." See MPEP 601.01(g).

It is obvious from the petition that no drawing Figures were actually missing on February 26, 2004. Rather, the specification was simply mislabeled as a result of Applicant's filing error. However, the Notice mailed July 30, 2004, was correct in stating that Figures 5a and 5b described in the specification appeared to have been omitted from the application. Therefore, the requirement to submit the omitted Figures set forth in the Notice will not be withdrawn.

Accordingly, the petition is dismissed.

Applicants are advised that a petition is not necessary in this instance to add the drawing figures. New drawings may be entered by the primary examiner without a petition so long as the drawings contain no new matter. See, MPEP § 608.02(a). Applicants may add figure(s) described in the specification on the basis that the drawings are not new matter. The Preliminary Amendment filed on August 10, 2004, will be considered by the primary examiner in due course.

The petition fee will not be refunded, since the petition was not necessitated by any error on the part of the USPTO.

This application is being forwarded to the Office of Initial Patent Examination, Customer Corrections, for further processing, with the filing date of February 26, 2004, using the application papers and drawing Figures filed on that date.

Telephone inquiries related to this decision may be directed to the undersigned at (703) 305-0014.

Derek L. Woods
Petitions Attorney
Office of Petitions

UNITED STATES PATENT AND TRADEMARK OFFICE

Commissioner for Patents
United States Patent and Trademark Office
P.O. Box 1450
Alexandria, VA 22313-1450
www.uspto.gov

HOWARD J. GREENWALD P.C.
349 W. COMMERCIAL STREET SUITE 2490
EAST ROCHESTER NY 14445-2408

COPY MAILED
MAY 05 2006
OFFICE OF PETITIONS

In re Application of	:	
Connelly et al.	:	DECISION ON PETITION
Application No. 10/787,279	:	TO WITHDRAW
Filed: February 26, 2004	:	FROM RECORD
Attorney Docket No. PRC-644	:	

This is a decision on the Request to Withdraw as attorney or agent of record under 37 C.F.R. § 1.36(b), filed October 5, 2005.

The request is **NOT APPROVED** as moot.

A review of the file record indicates that a Revocation and New Power of Attorney was submitted on December 7, 2005 by the assignee of the entire interest. Accordingly, the request to withdraw under 37 C.F.R. § 1.36(b) is moot.

All future communications from the Office will continue to be directed to the first below-listed address until otherwise notified by applicant.

Telephone inquires concerning this decision should be directed to Petitions Examiner Liana Chase at 571-272- 3206.

David Bucci
Petitions Examiner
Office of Petitions

cc:

BUCHANAN INGERSOLL PC
(INCLUDING BURNS, DOANE, SWECKER & MATHIS)
POST OFFICE BOX 1404
ALEXANDRIA VA 22313-1404

MICHAEL L. WEINER
BIOMED SOLUTIONS, LLC
150 LUCIUS GORDON DRIVE, SUITE 215
WEST HENRIETTA, NY 14568

UNITED STATES PATENT AND TRADEMARK OFFICE

COMMISSIONER FOR PATENTS
UNITED STATES PATENT AND TRADEMARK OFFICE
P.O. BOX 1450
ALEXANDRIA, VA 22313-1450
www.uspto.gov

FISH & RICHARDSON, P.C.
P.O. BOX 1022
MINNEAPOLIS, MN 55440-1022

COPY MAILED

MAY 2 8 2008

OFFICE OF PETITIONS

In re Application of :
John Prudden, Jr. et. al. :
Application No. 10/787,289 : ON PETITION
Filed: February 26, 2004 :
Attorney Docket No. 00216-620001/Case 4272 :

This is a decision on the petition under 37 CFR 1.137(b), filed October 25, 2007, to revive the above-identified application.

The application became abandoned for failure to reply to the final Office action mailed April 18, 2007.

The petition satisfies the requirements of 37 CFR 1.137(b) in that petitioner has supplied (1) the reply in the form of a continuation application; (2) the petition fee of $1,540; and (3) a proper statement of unintentional delay. Therefore, the petition is **GRANTED**.

This application is being revived solely for purposes of continuity. As continuity has been established by this decision, the application is again abandoned in favor of continuing application No. 11/874,588.

The Office acknowledges receipt of $1,050 for a three months extension of time filed on October 25, 2007. However, an extension of time under 37 CFR 1.136 must be filed prior to the expiration of the maximum extendable period for reply. See In re Application of S., 8 USPQ2d 1630, 1631 (Comm'r. Pats. 1988). Accordingly, since the $1,050 extension of time was subsequent to the maximum extendable period for reply, this fee is unnecessary and will be credited to petitioner's deposit account.

Telephone inquiries concerning this decision should be directed to the undersigned at (571) 272-3226.

Andrea Smith
Petitions Examiner
Office of Petitions

UNITED STATES PATENT AND TRADEMARK OFFICE

Commissioner for Patents
United States Patent and Trademark Office
P.O. Box 1450
Alexandria, VA 22313-1450
www.uspto.gov

MAR 9 2005

In re Application of :
Chris Fenech : DECISION ON PETITION
Application No. 10/787,294 :
Filed: February 26, 2004 :
Attorney Docket No. 1225-3042.001 :

This is a decision on the petition to make special filed on February 26, 2004. The petition is based upon the practice described in MPEP § 708.02(VIII) "Accelerated Examination. The $130.00 petition fee has been paid.

The petition is granted.

The petition to make special based upon the practice in the above mentioned MPEP sections is deemed to satisfy all of the requirements thereof. Accordingly, the examiner will treat this application as special throughout its prosecution, in accordance with the examining practice set forth in items (A)-(E) on page 700-130 of the MPEP. Prior to the first action on the merits, the examiner will conduct a rigorous search for potentially interfering applications. The interference search will be brought up to date prior to each successive action.

The Supervisory Patent Examiner of Patent Examining Art Unit 3747 is being informed of this decision, and will advise the examiner to take future action consistent therewith.

PETITION GRANTED.

Stephen Marcus, Special Program Examiner,
Technology Center 3700

Reising, Ethington, Barnes, Kisselle, P.C.
P.O. Box 4390
Troy, MI 48099-4390

UNITED STATES PATENT AND TRADEMARK OFFICE

Commissioner for Patents
United States Patent and Trademark Office
P.O. Box 1450
Alexandria, VA 22313-1450
www.uspto.gov

SUN MICROSYSTEMS/FINNEGAN, HENDERSON LLP
901 NEW YORK AVENUE, NW
WASHINGTON DC 20001-4413

COPY MAILED

JUN 0 5 2008

OFFICE OF PETITIONS

In re Application of
Kevin Faulkner et al
Application No. 10/787,324
Filed: February 27, 2004
Attorney Docket No. 6502.0571

DECISION DISMISSING PETITION
UNDER 37 CFR 1.313(c)(2)

This is a decision on the petition under 37 CFR 1.313(c)(2), filed May 30, 2008, to withdraw the above-identified application from issue after payment of the issue fee.

The petition is **DISMISSED AS MOOT**.

Unfortunately, the petition was not referred to the appropriate deciding official for decision until after the issuance of this application into a patent. However, petitioner's attention is directed to 37 CFR 1.313(d), which states:

> A petition under this section will not be effective to withdraw the application from issue unless it is actually received and granted by the appropriate officials **before the date of issue**. (Emphasis added)

In this case, the petition was not received in the Office of Petitions for consideration until June 3, 2008. Therefore, as the case has now issued, the petition to withdraw from issue cannot be granted.

The request for continued examination (RCE) filed concurrently with the petition is improper in view of the issuance of this application into a patent and will not be processed. Accordingly, the $810 filing fee and the $130 petition fee submitted are unnecessary and will be refunded in due course.

The Information Disclosure Statement has been made of record in the file of the above-identified application without further consideration. *See* 37 CFR 1.97(i).

Petitioner is advised, that while petitions to withdraw from issue may be mailed to the Commissioner for Patents, as was done in this case, applicants were cautioned to hand carry or fax petitions to withdraw from issue directly to the Office of Petitions. *See* MPEP § 1308.

Telephone inquiries should be directed to the undersigned at (571) 272-3208.

Karen Creasy
Petitions Examiner
Office of Petitions

UNITED STATES PATENT AND TRADEMARK OFFICE

Commissioner for Patents
United States Patent and Trademark Office
P.O. Box 1450
Alexandria, VA 22313-1450
www.uspto.gov

POLSTER, LIEDER, WOODRUFF & LUCCHESI
12412 POWERSCOURT DRIVE SUITE 200
ST. LOUIS MO 63131-3615

COPY MAILED

APR 0 4 2006

OFFICE OF PETITIONS

In re Application of	:	
Goad et al.	:	
Application No. 10/787,339	:	ON PETITION
Filed: February 26, 2004	:	
Attorney Docket No. GOAC 8768US	:	

This is a decision on the petition under 37 C.F.R. § 1.137(b), filed March 13, 2006, to revive the above-identified application.

The petition is **GRANTED.**

The petition satisfies the conditions for revival pursuant to the provisions of 37 CFR 1.137(b) in that (1) the reply in the form of the Issue Fee Transmittal with payment of the issue and publication fees; (2) the petition fee; and (3) the required statement of unintentional delay have been received. Accordingly, the response has been accepted as having been unintentionally delayed.

This matter is being referred to the Publishing Division for processing into a patent.

Telephone inquiries regarding this decision should be directed to the undersigned at (571) 272-3282.

Liana Chase
Petitions Examiner
Office of Petitions

UNITED STATES PATENT AND TRADEMARK OFFICE

Commissioner for Patents
United States Patent and Trademark Office
P.O. Box 1450
Alexandria, VA 22313-1450
www.uspto.g

THE PROCTER & GAMBLE COMPANY
GLOBAL LEGAL DEPARTMENT – IP
SYCAMORE BUILDING – 4TH FLOOR
299 EAST SIXTH STREET
CINCINNATI, OH 45202

COPY MAILED

AUG 0 6 2008

OFFICE OF PETITIONS

In re Application of :
Hutton et al. :
Application No. 10/787,342 : DECISION ON PETITION
Filed: February 26, 2004 :
Attorney Docket No. AA-615M :

This is a decision on the petition under the unintentional provisions of 37 CFR 1.137(b), filed October 16, 2007, to revive the above-identified application.

The petition is **GRANTED**.

The application became abandoned for failure to timely file a reply within the meaning of 37 CFR 1.113 to the final Office action of February 6, 2007. The proposed reply required for consideration of a petition to revive must be a Notice of Appeal (and appeal fee required by 37 CFR 41.20(b)(2), an amendment that *prima facie* places the application in condition for allowance, a Request for Continued Examination and submission (37 CFR 1.114), or the filing of a continuing application under 37 CFR 1.53(b). See MPEP 711.03(c)(III)(A)(2). Extensions of time pursuant to the provisions of 37 CFR 1.136(a) were timely filed. Accordingly, the date of abandonment of this application is August 7, 2007. A Notice of Abandonment was mailed August 31, 2007.

The petition satisfies the requirements of 37 CFR 1.137(b) in that petitioner has supplied (1) the reply in the form of a previously filed Request for Continued Examination (RCE) and fee of $790.00, and the submission required by 37 CFR 1.114; (2) the petition fee of $1,540.00; and (3) a proper statement of unintentional delay.

Further, the duplicate Request for Continued Examination (RCE) fee of $810.00 submitted October 16, 2007 will be refunded to petitioner's deposit account in due course.

Telephone inquiries concerning this decision should be directed to Joan Olszewski at (571) 272-7751.

This application is being referred to Technology Center AU 1796 for processing of the RCE and for appropriate action by the Examiner in the normal course of business on the amendment submitted in accordance with 37 CFR.1.114.

Liana Walsh
Petitions Examiner
Office of Petitions

UNITED STATES PATENT AND TRADEMARK OFFICE

UNITED STATES DEPARTMENT OF COMMERCE
United States Patent and Trademark Office
Address: COMMISSIONER FOR PATENTS
P.O. Box 1450
Alexandria, Virginia 22313-1450
www.uspto.gov

THE PROCTER & GAMBLE COMPANY
Global Legal Department - IP
Sycamore Building - 4th Floor
299 East Sixth Street
CINCINNATI, OH 45202

Mail Date: 04/21/2010

Applicant	: Guy Hubert Stephane Sylvain Culeron	: DECISION ON REQUEST FOR RECALCULATION of PATENT TERM ADJUSTMENT IN VIEW OF WYETH AND NOTICE OF INTENT TO ISSUE CERTIFICATE OF CORRECTION
Patent Number	: 7651992	:
Issue Date	: 01/26/2010	:
Appliction No	: 10/787,343	:
Filed	: 02/26/2004	:

The Request for Recalculation is **GRANTED** to the extent indicated.

The patent term adjustment has been determined to be **362** days. The USPTO will *sua sponte* issue a certificate of correction reflecting the amount of PTA days determined by the recalculation.

Prior to the issuance of the certificate of correction, the USPTO will afford patentee an opportunity to be heard and request reconsideration. Accordingly, patentee has **one month or thirty (30) days**, whichever is longer, to file a request for reconsideration of this patent term adjustment calculation. See 35 U.S.C. 154(b)(3)(B)(ii) and 37 CFR 1.322(a)(4). No extensions of time will be granted under 37 CFR 1.136.

Patentee should use document code PET.OP if electronically filing a request for reconsideration of this patent term adjustment calculation. The patentee must also include the information required by 37 CFR 1.705(b)(2) and the fee required by 37 CFR 1.18(e). If patentee does not file a timely request for reconsideration of this patent term adjustment calculation including the information required by 37 CFR 1.705(b)(2) and the fee required by 37 CFR 1.18(e), the USPTO will issue a certificate of correction reflecting the PTA determination noted above.

Patentee should be aware that in order to preserve the right to review in the United States District Court for the District of Columbia of the USPTO patent term adjustment determination, patentee must ensure that he or she also take the steps required under 35 U.S.C. 154(b)(4)(A) in a timely manner. Nothing in the request for recalculation should be construed as providing an alternative time frame for commencing a civil action under 35 U.S.C. 154(b)(4)(A).

Any questions concerning this decision should be directed to the Office of Patent Legal Administration at 571-272-7702.

UNITED STATES PATENT AND TRADEMARK OFFICE

Commissioner for Patents
United States Patent and Trademark Office
P.O. Box 1450
Alexandria, VA 22313-1450
www.uspto.gov

IP DEPARTMENT
SONNENSCHEIN NATH
& ROSENTHAL LLP
P.O. BOX 061080
WACKER DRIVE STATION
CHICAGO IL 60606

COPY MAILED

DEC 15 2008

OFFICE OF PETITIONS

In re Application of :
Fries, et al. :
Application No. 10/787,345 : DECISION
Filed: 26 February, 2004 :
Attorney Docket No. 11000060-0040 :

This is a decision on the petition filed on 13 November, 2008, considered as a petition under 37 C.F.R. §1.181 (no fee) requesting withdrawal of the holding of abandonment in the above-identified application, alternatively seeking revival of the application under the provisions of 37 C.F.R. §1.137(a), and averring unavoidable delay.

The petition under 37 C.F.R. §1.181 is **DISMISSED**; and the petition under 37 C.F.R. §1.137(a) is **DISMISSED**.

Any request for reconsideration of this decision should be filed **within two (2) months** from the mail date of this decision. *Note* 37 C.F.R. §1.181(f). The request for reconsideration should include a cover letter and be entitled as a "Renewed Petition under 37 C.F.R. §1.181 to Withdraw the Holding of Abandonment."

This is **not** a final agency action within the meaning of 5 U.S.C. §704.

As to the Request to Withdraw
the Holding of Abandonment

Petitioner is directed to the Commentary at MPEP §711.03(c)(I) for guidance as to the proper showing and timeliness and showing requirements for relief under 37 C.F.R. §1.181.

Petitioner appears not to comply with the guidance in the Commentary at MPEP §711.03(c)(I)—as discussed below, Petitioner has failed to satisfy the showing requirements set forth there.

Petitioner may find it beneficial to review that material and move step-wise through that guidance in the effort to satisfy the showing requirements (statements and supporting documentation). Petitioner, as Counsel registered to practice before the Office, has not made the statements and not provided the documentary support (copy of the docket sheet (or file jacket cover) for the instant application and copy of the due-date docket for the reply due date) required. (*See*: MPEP §711.03(c)(I).)

As to Allegation of
Unavoidable Delay

The requirements of a grantable petition pursuant to 37 C.F.R. §1.137(a) are the petition and fee therefor, a reply, a proper showing of unavoidable delay under the regulation, and, where applicable, a terminal disclaimer and fee. (However, it does not appear that a terminal disclaimer and fee are due here.)

Petitioner does not appear to have satisfied the reply and showing requirements as to unavoidable delay.

BACKGROUND

The record reflects as follows:

Petitioner failed to reply to the non-final Office action mailed on 19 December, 2007, with reply due absent extension of time on or before 19 March, 2008.

The application went abandoned by operation of law after midnight 19 March, 2008.

On 12 May, 2008, Petitioner's office sought status in the matter after it appears that Counsel Michael W. Maddox (Reg. No. 47,764) moved from one law firm to another, and on 27 August, 2008, Petitioner's office attempted to revoke/submit a power of attorney, however, the Office Noticed the former office of Mr. Maddox that the required certificate pursuant to 37 C.F.R. §3.73(b) had not been received.

The Office mailed the Notice of Abandonment on 23 September, 2008.

On 30 October, 2008, Petitioner filed a revocation/power of attorney, which the Office acknowledged on 7 November, 2008.

On 13 November, 2008, Petitioner filed a petition averring, *inter alia*, non-receipt, and sought withdrawal of the holding of abandonment pursuant to 37 C.F.R. §1.181, but failed to comply with the express requirements for showing required herein as set forth at MPEP 711.03(c)(I)—including but not limited to the statement of search and non-discovery, the description as to the docketing and/or calendaring system and its reliability, and required documentary support of the

docket sheet (or file jacket cover) of the instant application and the due date calendar for the reply in question. Moreover, there is no statement from Mr. Maddox as the registered practitioner who oversaw the matter at the time of abandonment, nor from Petitioner. Thus, Petitioner failed to demonstrate that the Office action in question was not received (and so docketed, that the system provides sufficient and reasonable reliability and that it therefore does not appear either on the application docket sheet or on the due-date calendar for reply.

Petitioner averred that the delay was unavoidable and expressly invoked the provisions of the regulations under 37 C.F.R. §1.137(a), and, the fee was authorized and is now charged to Deposit Account 19-3140, however, Petitioner failed to satisfy the regulatory (showing and reply) requirements pursuant to the rule.

From the history of this matter, as set out above, it appears that Petitioner's office attempted to move the prosecution of the instant application from one law firm to another and in doing so did not keep track of the Office action in question. Such is not the basis for a petition to withdraw the holding of abandonment pursuant to 37 C.F.R. §1.181 or of a petition to revive pursuant to 37 C.F.R. §1.137(a).

The discussion at MPEP 711.03(c)(I) provides in pertinent part:

***

> The showing required to establish nonreceipt of an Office communication must include a statement from the practitioner describing the system used for recording an Office action received at the correspondence address of record with the USPTO. The statement should establish that the docketing system is sufficiently reliable. It is expected that the record would include, but not be limited to, the application number, attorney docket number, the mail date of the Office action and the due date for the response.
>
> Practitioner must state that the Office action was not received at the correspondence address of record, and that a search of the practitioner's record(s), including any file jacket or the equivalent, and the application contents, indicates that the Office action was not received. A copy of the record(s) used by the practitioner where the non-received Office action would have been entered had it been received is required.
>
> A copy of the practitioner's record(s) required to show non-receipt of the Office action should include the master docket for the firm. That is, if a three month period for reply was set in the nonreceived Office action, a copy of the master docket report showing all replies docketed for a date three months from the mail date of the nonreceived Office action must be submitted as documentary proof of nonreceipt of the Office action. If no such master docket exists, the practitioner should so state and provide other evidence such as, but not limited to, the following: the application file jacket; incoming mail log;

calendar; reminder system; or the individual docket record for the application in question.[1]

***

Out of an abundance of caution, Petitioners always are reminded that the filing of a petition under 37 C.F.R. §1.181 does not toll any periods that may be running any action by the Office and a petition seeking relief under the regulation must be filed within two (2) months of the act complained of (*see*: 37 C.F.R. §1.181(f)), and that those registered to practice and all others who make representations before the Office are reminded to inquire into the underlying facts of representations made to the Office and support averments with the appropriate documentation– since all owe to the Office the continuing duty to disclose.[2]

The availability of applications and application papers online to applicants/practitioners who diligently associate their Customer Number with the respective application(s) now provides an applicant/practitioner on-demand information as to events/transactions in an application.

STATUTES, REGULATIONS

Congress has authorized the Commissioner to "revive an application if the delay is shown to the satisfaction of the Commissioner to have been "unavoidable." 35 U.S.C. §133 (1994).

Allegations as to the Request to Withdraw the Holding of Abandonment

The guidance in the Commentary at MPEP §711.03(c)(I) specifies the showing required and how it is to be made and supported.

Petitioner failed to make the showing required.

As to Allegations of Unavoidable Delay

The requirements under 37 C.F.R. §1.137(a) have not been satisfied as of this writing in that Petitioner failed to make the showing of unavoidable delay and provide a reply to the Office action as required.

---

1 *See*: MPEP §711.03(c) (I)(A).

2 See supplement of 17 June, 1999. The Patent and Trademark Office is relying on Petitioner's duty of candor and good faith and accepting a statement made by Petitioner. See Changes to Patent Practice and Procedure, 62 Fed. Reg. at 53160 and 53178, 1203 Off. Gaz. Pat. Office at 88 and 103 (responses to comments 64 and 109)(applicant obligated under 37 C.F.R. §10.18 to inquire into the underlying facts and circumstances when providing statements to the Patent and Trademark Office).

CONCLUSION

Accordingly, The petition under 37 C.F.R. §1.181 is **dismissed**; and the petition under 37 C.F.R. §1.137(a) is **dismissed**.

ALTERNATIVE VENUE

Should Petitioner wish to revive the application, Petitioner may wish to properly file a petition to the Commissioner requesting revival of an application abandoned due to unintentional delay under 37 C.F.R. §1.137(b). (See: http://www.uspto.gov/web/offices/pac/mpep/documents/0700_711_03_c.htm#sect711.03c)

A petition to revive on the grounds of unintentional delay must be filed promptly and such petition must be accompanied by the reply, the petition fee, a terminal disclaimer and fee where appropriate and a statement that "the entire delay in filing the required reply from the due date for the reply until the filing of a grantable petition was unintentional." (The statement is in the form available online.)

Further correspondence with respect to this matter should be addressed as follows:

By Mail:
Mail Stop PETITION
Commissioner for Patents
P. O. Box 1450
Alexandria, VA 22313-1450

By hand:
U. S. Patent and Trademark Office
Customer Service Window, Mail Stop Petitions
Randolph Building
401 Dulany Street
Alexandria, VA 22314

By facsimile:
(571) 273-8300
Attn: Office of Petitions

Telephone inquiries regarding this decision may be directed to the undersigned at (571) 272-3214—it is noted, however, that all practice before the Office is in writing (see: 37 C.F.R. §1.2[3]) and the proper authority for action on any matter in this regard are the statutes (35 U.S.C.), regulations (37 C.F.R.) and the commentary on policy (MPEP). Therefore, no telephone discussion may be controlling or considered authority for Petitioner's action(s).

/John J. Gillon, Jr./
John J. Gillon, Jr.
Senior Attorney
Office of Petitions

[3] The regulations at 37 C.F.R. §1.2 provide:

§1.2 Business to be transacted in writing.

All business with the Patent and Trademark Office should be transacted in writing. The personal attendance of applicants or their attorneys or agents at the Patent and Trademark Office is unnecessary. The action of the Patent and Trademark Office will be based exclusively on the written record in the Office. No attention will be paid to any alleged oral promise, stipulation, or understanding in relation to which there is disagreement or doubt.

UNITED STATES PATENT AND TRADEMARK OFFICE

UNITED STATES DEPARTMENT OF COMMERCE
United States Patent and Trademark Office
Address: COMMISSIONER FOR PATENTS
P.O. Box 1450
Alexandria, Virginia 22313-1450
www.uspto.gov

APPLICATION NO.	FILING DATE	FIRST NAMED INVENTOR	ATTORNEY DOCKET NO.	CONFIRMATION NO.
10/787,345	02/26/2004	Jeffrey M. Fries	024777.0136PTUS	3974

7590 12/19/2007

IP Department
Patton Boggs, LLP
Suite 3000
2001 Ross Avenue
Dallas, TX 75201

EXAMINER	
TIEU, BINH KIEN	

ART UNIT	PAPER NUMBER
2614	

MAIL DATE	DELIVERY MODE
12/19/2007	PAPER

Please find below and/or attached an Office communication concerning this application or proceeding.

The time period for reply, if any, is set in the attached communication.

Office Action Summary	Application No.	Applicant(s)	
	10/787,345	FRIES ET AL.	
	Examiner	Art Unit	
	/BINH K. TIEU/	2614	

-- The MAILING DATE of this communication appears on the cover sheet with the correspondence address --

Period for Reply

A SHORTENED STATUTORY PERIOD FOR REPLY IS SET TO EXPIRE 3 MONTH(S) OR THIRTY (30) DAYS, WHICHEVER IS LONGER, FROM THE MAILING DATE OF THIS COMMUNICATION.

- Extensions of time may be available under the provisions of 37 CFR 1.136(a). In no event, however, may a reply be timely filed after SIX (6) MONTHS from the mailing date of this communication.
- If NO period for reply is specified above, the maximum statutory period will apply and will expire SIX (6) MONTHS from the mailing date of this communication.
- Failure to reply within the set or extended period for reply will, by statute, cause the application to become ABANDONED (35 U.S.C. § 133). Any reply received by the Office later than three months after the mailing date of this communication, even if timely filed, may reduce any earned patent term adjustment. See 37 CFR 1.704(b).

Status

1)☒ Responsive to communication(s) filed on *08 November 2007*.

2a)☐ This action is **FINAL**. 2b)☒ This action is non-final.

3)☐ Since this application is in condition for allowance except for formal matters, prosecution as to the merits is closed in accordance with the practice under *Ex parte Quayle*, 1935 C.D. 11, 453 O.G. 213.

Disposition of Claims

4)☒ Claim(s) *1-25* is/are pending in the application.

4a) Of the above claim(s) _____ is/are withdrawn from consideration.

5)☐ Claim(s) _____ is/are allowed.

6)☒ Claim(s) *1-25* is/are rejected.

7)☐ Claim(s) _____ is/are objected to.

8)☐ Claim(s) _____ are subject to restriction and/or election requirement.

Application Papers

9)☐ The specification is objected to by the Examiner.

10)☐ The drawing(s) filed on _____ is/are: a)☐ accepted or b)☐ objected to by the Examiner.

Applicant may not request that any objection to the drawing(s) be held in abeyance. See 37 CFR 1.85(a).

Replacement drawing sheet(s) including the correction is required if the drawing(s) is objected to. See 37 CFR 1.121(d).

11)☐ The oath or declaration is objected to by the Examiner. Note the attached Office Action or form PTO-152.

Priority under 35 U.S.C. § 119

12)☐ Acknowledgment is made of a claim for foreign priority under 35 U.S.C. § 119(a)-(d) or (f).

a)☐ All b)☐ Some * c)☐ None of:

1.☐ Certified copies of the priority documents have been received.

2.☐ Certified copies of the priority documents have been received in Application No. _____.

3.☐ Copies of the certified copies of the priority documents have been received in this National Stage application from the International Bureau (PCT Rule 17.2(a)).

* See the attached detailed Office action for a list of the certified copies not received.

Attachment(s)

1) ☒ Notice of References Cited (PTO-892)
2) ☐ Notice of Draftsperson's Patent Drawing Review (PTO-948)
3) ☐ Information Disclosure Statement(s) (PTO/SB/08) Paper No(s)/Mail Date _____.
4) ☐ Interview Summary (PTO-413) Paper No(s)/Mail Date. _____.
5) ☐ Notice of Informal Patent Application
6) ☐ Other: _____.

DETAILED ACTION

Claim Rejections - 35 USC § 102

1. The following is a quotation of the appropriate paragraphs of 35 U.S.C. 102 that form the basis for the rejections under this section made in this Office action:

> A person shall be entitled to a patent unless –
>
> (b) the invention was patented or described in a printed publication in this or a foreign country or in public use or on sale in this country, more than one year prior to the date of application for patent in the United States.

2. Claim 1 is rejected under 35 U.S.C. 102(e) as being anticipated by Rakotoarivelo et al. (Pub. No.: US. 2003/0212685).

Regarding claim 1, Rakotoarivelo et al. ("Rakotoarivelo") teaches a computerized system for automatically updating the layout of a telecommunications network, the system comprising:

a maintenance entry component (i.e., user interface 15 as shown in figure 1) for receiving maintenance information (see paragraph [0045]); and

a structural database component that updates the physical layout database of the network to reflect equipment has been added or removed from the physical layout of the telecommunications network (see paragraphs [0052]).

3. Claims 8-10 and 14-25 are rejected under 35 U.S.C. 102(e) as being anticipated by Galou et al. (US. Pat. #: 6,957,263).

Regarding claim 8, Galou et al. ("Galou") teaches a method in a computer system for automatically updating the layout of a telecommunications network, the method comprising:

receiving maintenance information that equipment has been added or removed from a physical layout of a telecommunications network (see col.8,line 36 through col.9, line 43); and

automatically updating a physical layout database of the network to reflect that equipment has been added or removed from the physical layout of the telecommunications network, such that information in the physical layout database may be utilized to generate line usage reports (col.13, lines 12-54 and col.14, lines 44-60).

Regarding claim 9, Galou further teaches limitations of the claim in col.14, lines 13-27.

Regarding claim 10, Galou further teaches limitations of the claim in col.5, lines 19-23; col.12, lines 25-33 and col.14, lines 3-8.

Regarding claim 14, Galou further teaches limitations of the claim in col.7, line 51 through col.8, line 48.

Regarding claim 15, Galou teaches a method in a computer system for displaying load balance activity, the method comprising:

receiving maintenance information that equipment has been added or removed from a physical layout of a telecommunications network (col.8, lines 20-24 and col14, lines 9-25);

storing the maintenance information for the associated equipment in the telecommunications network (col.13, lines 46-54; col.14, lines 47-60);

receiving request for line usage information for one or more items of equipment in telecommunications network (col.10, lines 3-16);

accessing maintenance information associated with the one or more items of equipment; and displaying the line usage information and associated maintenance information (col.13, lines 12-45).

Regarding claim 16, Galou further teaches limitations of the claim in col.14, lines 13-27.

Regarding claims 17-19, Galou further teaches limitations of the claim in col.13, lines 3-22 and lines 57-65.

Regarding claim 20, Galou further teaches limitations of the claim in col.7, line 51 through col.8, line 48.

Regarding claims 21-25 are rejected with the same reasons set forth in the rejections of claims 15-20 above.

Claim Rejections - 35 USC § 103

4. The following is a quotation of 35 U.S.C. 103(a) which forms the basis for all obviousness rejections set forth in this Office action:

> (a) A patent may not be obtained though the invention is not identically disclosed or described as set forth in section 102 of this title, if the differences between the subject matter sought to be patented and the prior art are such that the subject matter as a whole would have been obvious at the time the invention was made to a person having ordinary skill in the art to which said subject matter pertains. Patentability shall not be negatived by the manner in which the invention was made.

This application currently names joint inventors. In considering patentability of the claims under 35 U.S.C. 103(a), the examiner presumes that the subject matter of the various claims was commonly owned at the time any inventions covered therein were made absent any evidence to the contrary. Applicant is advised of the obligation under 37 CFR 1.56 to point out the inventor and invention dates of each claim that was not commonly owned at the time a later

invention was made in order for the examiner to consider the applicability of 35 U.S.C. 103(c) and potential 35 U.S.C. 102(e), (f) or (g) prior art under 35 U.S.C. 103(a).

5. Claims 2-5 are rejected under 35 U.S.C. 103(a) as being unpatentable over Rakotoarivelo et al. (Pub. No.: US. 2003/0212685) in view of Galou et al. (US. Pat. #: 6,957,263).

Regarding claim 2, Rakotoarivelo teaches all subject matters as claimed above, except for the features of the maintenance information including lines that have been added to a particular line unit. However, Galou teaches such feature in col.11, lines 43-57 for a purpose of establishing route connections.

Therefore, it would have been obvious to one of ordinary skill in the art the time the invention was made to incorporate the use of the features of the maintenance information including lines that have been added to a particular line unit, as taught by Galou, into view of Rakotoarivelo in order to improve maintenance services in wirelined telecommunication networks.

Regarding claim 3, Galou further teaches limitations of the claim in col.14, lines 9-25; col.16, lines 7-28.

Regarding claim 4, Galou further teaches limitations of the claim in col.18, line 45 through col.19, line 6.

Regarding claim 5, Galou further teaches limitations of the claim in col.5, lines 19-23; col.12, lines 25-33 and col.14, lines 3-8.

6. Claims 6-7 and 11-13 are rejected under 35 U.S.C. 103(a) as being unpatentable over Rakotoarivelo et al. (Pub. No.: US. 2003/0212685) in view of Galou et al. (US. Pat. #: 6,957,263) as applied to claims 1 and 5 above, and further in view of Mehra et al. (US. Pat. #: 7,089,583 as cited in the previous Office Action).

Regarding claims 6-7 and 11-13, Rakotoarivelo and Galou, in combination, teaches all subject matters, except for a maintenance and tracking information including time and date that the information was enter, and an identity of the user entering the maintenance information. However, Mehra et al. ("Mehra") teaches an automated system comprising a Business Development Kit ("BDK") providing the ability to track the history of all changes to an object, including the time and date of a change, the identity of the user, etc. for a purpose of providing security.

Therefore, it would have been obvious to one of ordinary skill in the art at the time the invention was made to incorporate the use of the features of a maintenance tracking component for storing and tracking information including time and date that the maintenance information was enter, and an identity of the user entering the maintenance information, as taught by Mehra, into view of Rakotoarivelo and Galou in order to provide security and to protect the computerized system.

Response to Arguments

7. Applicant's arguments with respect to claims 1-25 have been considered but are moot in view of the new ground(s) of rejection.

8. Any inquiry concerning this communication or earlier communications from the examiner should be directed to Binh K. Tieu whose telephone number is (571) 272-7510 and E-mail address: BINH.TIEU@USPTO.GOV.

If attempts to reach the examiner by telephone are unsuccessful, the examiner's supervisor, Mr. Curtis Kuntz, can be reached on (571) 272-7499 and **IF PAPER HAS BEEN MISSED FROM THIS OFFICIAL ACTION PACKAGE, PLEASE CALL CUSTOMER SERVICE FOR THE SUBSTITUTIONS OR COPIES.**

Any response to this action should be mailed to:
Commissioner of Patents and Trademarks
Washington, D.C. 20231
Or faxed to:
(571) 273-8300
Hand Carry Deliveries to:
Customer Service Window
(Randolph Building)
401 Dulany Street
Alexandria, VA 22314

In formation regarding the status of an application may be obtained from the Patent Application Information Retrieval (FAIR) system. Status information for published applications may be obtained from either Private PAIR or Public PAIR. Status information for unpublished applications is available through Private PAIR only. For more information about the FAIR system, see http://pair-direct.uspto.gov. Should you have questions on access to the Private PAIR system, contact the Electronic Business Center (EBC) at 866-217-9197 (toll-free).

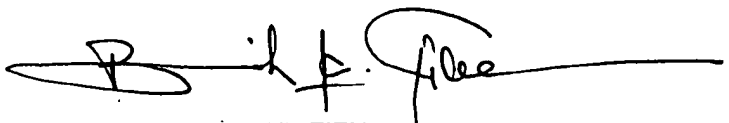

BINH TIEU
PRIMARY EXAMINER

Technology Division 2614

Date: December 17, 2007

PATENT
Atty. Docket No. 024777.0136PTUS

IN THE UNITED STATES PATENT AND TRADEMARK OFFICE

In re Application of:			
Fries, et al.		§	
		§	
Serial No.	10/787,345	§	Examiner: Binh Kien Tieu
		§	Confirmation No.: 3974
Filed:	February 26, 2004	§	Group No.: 2614

For: Computerized System and Method for Updating the Layout of a Telecommunications Network

Commissioner for Patents
Post Office Box 1450
Alexandria, VA 22313-1450

Dear Sir:

REQUEST FOR RECONSIDERATION OF HOLDING OF ABANDONMENT

Regarding the Notice of Abandonment mailed September 23, 2008, Applicant asserts that there is no abandonment in fact. Per MPEP 711.03, Applicant requests the Examiner to reconsider the holding of abandonment because the failure to reply was unavoidable as per 37 CFR 1.137(a).

REMARKS

A Notice of Abandonment has been received by the practitioner. The Examiner asserts that Applicant has failed to timely file a proper response to the Office Action mailed on December 19, 2007.

Applicants contend, however, that the abandonment should be rescinded as Applicants failure to reply was unavoidable. In particular, Applicants did not receive this Office Action.

Attached is a Declaration affidavits signed by the IP docket and file coordinator and Senior IP docket clerk for your review and a copy of the docket indicating that no Office Action was received for that date.

The below signed practitioner searched the file jacket for this application and the contents therein and found no indication that the non-received Office Action was ever received. A status request (copy attached) was filed with the Patent Office on May 7, 2008, but no response was ever received.

As the Applicants had not received the Office Action dated December 19, 2007, the abandonment is in error and rescission of the abandonment in accordance with 37 C.F.R. 1.181(a) and MPEP 711.03(c) is hereby requested. Acknowledgment of the active status of this application is respectfully requested.

Applicant contends the abandonment of the above-identified application is a result of the U.S. Patent Office, thus no fee is enclosed with this Petition. The Commissioner is hereby authorized to charge any additional fees required, as well as any patent application processing fees associated with this communication for which full payment has not been tendered, to Deposit Account No. 19-3140.

Acknowledgment of the active status of this application is respectfully requested.

Respectfully submitted,

Date: 11/11/08

By: _____

Brian D. Owens (Reg. No. 55,517)
Sonnenschein, Nath & Rosenthal LLP
2000 McKinney Ave., Suite 1900
Dallas, Texas 75202
(Ofs) 214/259-0900
(Fax) 214/259-0910

PATENT
Atty. Docket No. 024777.0136PTUS

IN THE UNITED STATES PATENT AND TRADEMARK OFFICE

In re Application of:
Fries, et al. §
§
Serial No. 10/787,345 § Examiner: Binh Kien Tieu
§ Confirmation No.: 3974
Filed: February 26, 2004 § Group No.: 2614

For: Computerized System and Method for Updating the Layout of a Telecommunications Network

Commissioner for Patents
Post Office Box 1450
Alexandria, VA 22313-1450

Dear Sir:

REQUEST FOR RECONSIDERATION OF HOLDING OF ABANDONMENT

Regarding the Notice of Abandonment mailed September 23, 2008, Applicant asserts that there is no abandonment in fact. Per MPEP 711.03, Applicant requests the Examiner to reconsider the holding of abandonment because the failure to reply was unavoidable as per 37 CFR 1.137(a).

REMARKS

A Notice of Abandonment has been received by the practitioner. The Examiner asserts that Applicant has failed to timely file a proper response to the Office Action mailed on December 19, 2007.

Applicants contend, however, that the abandonment should be rescinded as Applicants failure to reply was unavoidable. In particular, Applicants did not receive this Office Action.

Attached is a Declaration affidavits signed by the IP docket and file coordinator and Senior IP docket clerk for your review and a copy of the docket indicating that no Office Action was received for that date.

The below signed practitioner searched the file jacket for this application and the contents therein and found no indication that the non-received Office Action was ever received. A status request (copy attached) was filed with the Patent Office on May 7, 2008, but no response was ever received.

As the Applicants had not received the Office Action dated December 19, 2007, the abandonment is in error and rescission of the abandonment in accordance with 37 C.F.R. 1.181(a) and MPEP 711.03(c) is hereby requested. Acknowledgment of the active status of this application is respectfully requested.

Applicant contends the abandonment of the above-identified application is a result of the U.S. Patent Office, thus no fee is enclosed with this Petition. The Commissioner is hereby authorized to charge any additional fees required, as well as any patent application processing fees associated with this communication for which full payment has not been tendered, to Deposit Account No. 19-3140.

Acknowledgment of the active status of this application is respectfully requested.

Respectfully submitted,

Date: 11/11/08

By: _____

Brian D. Owens (Reg. No. 55,517)
Sonnenschein, Nath & Rosenthal LLP
2000 McKinney Ave., Suite 1900
Dallas, Texas 75202
(Ofs) 214/259-0900
(Fax) 214/259-0910

UNITED STATES PATENT AND TRADEMARK OFFICE

Commissioner for Patents
United States Patent and Trademark Office
P.O. Box 1450
Alexandria, VA 22313-1450
www.uspto.gov

IP DEPARTMENT
SONNENSCHEIN NATH
& ROSENTHAL LLP
P.O. BOX 061080
WACKER DRIVE STATION
CHICAGO IL 60606

COPY MAILED

MAR 16 2009

OFFICE OF PETITIONS

In re Application of :
Fries, et al. :
Application No. 10/787,345 : DECISION
Filed: 26 February, 2004 :
Attorney Docket No. 11000060-0040 :

This is a decision on the petition filed on 17 February, 2009, under the provisions of 37 C.F.R. §1.137(a) seeking revival of the application as having been abandoned due to unavoidable delay; alternatively, under the provisions of 37 C.F.R. §1.181 seeking withdrawal of the holding of abandonment; alternatively, under the provisions of 37 C.F.R. §1.137(b), seeking revival of the application as having been abandoned due to unintentional delay.

The petition under 37 C.F.R. §1.137(a) is **DISMISSED**; the petition under 37 C.F.R. §1.181 is **DISMISSED**; and the petition under 37 C.F.R. §1.137(b) is **DISMISSED**.

Any request for reconsideration of this decision should be filed **within two (2) months** from the mail date of this decision. *Note* 37 C.F.R. §1.181(f). The request for reconsideration should include a cover letter and be entitled as a Renewed Petition to Revive under 37 C.F.R. §1.137(a) (as to unavoidable delay) or Renewed Petition to Revive under 37 C.F.R. §1.137(b) (as to unintentional delay).

This is **not** a final agency action within the meaning of 5 U.S.C. §704.

Petitioner's pleading is a jumble of requests for relief pursuant to: 37 C.F.R. §1.137(a) (unavoidable delay); 37 C.F.R. §1.181 (request to withdraw the holding of abandonment); and 37 C.F.R. §1.137(b) (unintentional delay)—with the petition bearing a title that suggests one vehicle for relief, a second express plea for relief and a third mere suggestion of a vehicle for relief.

In the alternative, Petitioner may properly file a petition to the Commissioner under 37 C.F.R. §1.137(b) requesting revival of an application abandoned due to unintentional delay.

As to Allegation of
Unavoidable Delay

The requirements of a grantable petition pursuant to 37 C.F.R. §1.137(a) are the petition and fee therefor, a reply, a proper showing of unavoidable delay under the regulation, and, where applicable, a terminal disclaimer and fee. (However, it does not appear that a terminal disclaimer and fee are due here.)

Petitioner does not appear to have satisfied—or be able to satisfy—the showing requirements under the rule.

As to the Request to Withdraw
the Holding of Abandonment

Petitioner's attention is directed to the Commentary at MPEP §711.03(c)(I) for guidance as to the proper showing and timeliness requirements for relief under 37 C.F.R. §1.181.

Petitioner appears not to satisfy—or be able to satisfy—the showing requirements set forth in the guidance in the Commentary at MPEP §711.03(c)(I).

For reference: Petitioner's attentions are directed to the guidance set forth in the Commentary at MPEP §711.03(c)(I)—and with particularity to the requirements therein of statements of non-receipt at the address of record, search and non-discovery, with a description of docketing system and a statement of its reliability, and support for those the statements with copies of the docket record/file jacket cover and due date calendar/docket. (The requirements of the regulations at under 37 C.F.R. §1.181 also impose upon a Petitioner a duty to seek relief there under within two (2) months of the act complained of.)

As to Allegation of
Unintentional Delay

The requirements of a grantable petition pursuant to 37 C.F.R. §1.137(b) are the petition and fee therefor, a reply, a proper /statement showing of unintentional delay under the regulation, and, where applicable, a terminal disclaimer and fee. (However, it does not appear that a terminal disclaimer and fee are due here.)

Petitioner does not appear to have satisfied the statement requirements under the rule and should make his fee authorization express. Petitioner also should ensure that the proper party—i.e., the attorney under whose control the application went abandoned—makes the express statement of unintentional delay.

BACKGROUND

The record reflects as follows:

Petitioner failed to reply to the non-final Office action mailed on 19 December, 2007, with reply due absent extension of time on or before 19 March, 2008.

The application went abandoned by operation of law after midnight 19 March, 2008.

On 12 May, 2008, Petitioner's office sought status in the matter after it appears that Counsel Michael W. Maddox (Reg. No. 47,764) moved from one law firm to another, and on 27 August, 2008, Petitioner's office attempted to revoke/submit a power of attorney, however, the Office Noticed the former office of Mr. Maddox that the required certificate pursuant to 37 C.F.R. §3.73(b) had not been received.

The Office mailed the Notice of Abandonment on 23 September, 2008.

On 30 October, 2008, Petitioner filed a revocation/power of attorney, which the Office acknowledged on 7 November, 2008.

On 13 November, 2008, Petitioner filed a petition averring, *inter alia*, non-receipt, and sought withdrawal of the holding of abandonment pursuant to 37 C.F.R. §1.181, but failed to comply with the express requirements for showing required herein as set forth at MPEP 711.03(c)(I)—including but not limited to the statement of search and non-discovery, the description as to the docketing and/or calendaring system and its reliability, and required documentary support of the docket sheet (or file jacket cover) of the instant application and the due date calendar for the reply in question. Moreover, there is no statement from Mr. Maddox as the registered practitioner who oversaw the matter at the time of abandonment, nor from Petitioner. Thus, Petitioner failed to demonstrate that the Office action in question was not received (and so docketed, that the system provides sufficient and reasonable reliability and that it therefore does not appear either on the application docket sheet or on the due-date calendar for reply.

Petitioner averred that the delay was unavoidable and expressly invoked the provisions of the regulations under 37 C.F.R. §1.137(a), and, the fee was authorized and was charged to Deposit Account 19-3140, however, Petitioner failed to satisfy the regulatory (showing) requirements pursuant to the rule. The petition was dismissed on 15 December, 2008

From the history of this matter, as set out above, it appears that Petitioner's office attempted to move the prosecution of the instant application from one law firm to another and in doing so did not keep track of the Office action in question. Such is not the basis for a petition to revive pursuant to 37 C.F.R. §1.137(a) or a request to withdraw the holding of abandonment pursuant to 37 C.F.R. §1.181.

Nonetheless, on 17 February, 2009, Petitioner reasserted his petitions pursuant to 37 C.F.R. §1.137(a) and pursuant to 37 C.F.R. §1.181—and threw in a suggestion of a request for relief pursuant to 37 C.F.R. §1.137(b).

As to the Holding of Abandonment

Petitioner places into the record statements that do not satisfy the \showing requirements set forth in the guidance in the Commentary at MPEP §711.03(c)(I)—as summarized above, and set forth *in extenso* in the decision of 15 December, 2008, and again hereinbelow.

The discussion at MPEP 711.03(c)(I) provides in pertinent part:

***

> The showing required to establish nonreceipt of an Office communication must include a statement from the practitioner describing the system used for recording an Office action received at the correspondence address of record with the USPTO. The statement should establish that the docketing system is sufficiently reliable. It is expected that the record would include, but not be limited to, the application number, attorney docket number, the mail date of the Office action and the due date for the response.
>
> Practitioner must state that the Office action was not received at the correspondence address of record, and that a search of the practitioner's record(s), including any file jacket or the equivalent, and the application contents, indicates that the Office action was not received. A copy of the record(s) used by the practitioner where the non-received Office action would have been entered had it been received is required.
>
> A copy of the practitioner's record(s) required to show non-receipt of the Office action should include the master docket for the firm. That is, if a three month period for reply was set in the nonreceived Office action, a copy of the master docket report showing all replies docketed for a date three months from the mail date of the nonreceived Office action must be submitted as documentary proof of nonreceipt of the Office action. If no such master docket exists, the practitioner should so state and provide other evidence such as, but not limited to, the following: the application file jacket; incoming mail log; calendar; reminder system; or the individual docket record for the application in question.[1]

***

[1] *See*: MPEP §711.03(c) (I)(A).

As to Unavoidable Delay

The showing requirements as to unavoidable are significant and demanding.

Yet Petitioner's submissions are confused—in addition to the overall confusion of the paper (as discussed above):

- The Status Inquiry that Petitioner avers was submitted on 12 May, 2008, refers to a non-existent Office action of "December 4, 2007." Office records evidence that the Examiner mailed non-final Office actions on 5 June, 2007, and again on 10 December, 2007—however, no Office action appears in the instant application on the date stated by Petitioner. Thus, what records Petitioner had or averred to have had appear unreliable at best.

- The statements by the former Pattton Boggs Senior IP Docket Clerk Elizabeth Stafford (Ms. Stafford) and by a former Patton Boggs IP Docket and File Coordinator Zaincorie Taylor-Smith (Ms. Taylor-Smith) are more than a year after-the-fact. Moreover, Ms. Stafford's statement indicates that Ms. Taylor-Smith was but one of several persons in her position—and therefore might not see all materials received—while Ms. Taylor-Smith suggests that she was the lone person in her position. And Ms. Stafford appears to have been not only the more-senior employee but also the more-longstanding employee.

- The first—and unsuccessful—attempt to file a Revocation/Power of Attorney clearly was based upon a document executed on 7 May, 2008—almost four (4) months before Petitioner sought to file the papers on 27 August, 2008. Apparently the process of Mr. Maddox's move from Patton Boggs to Sonnenschein Nath & Rosenthal LLP was in process long before any Notice was sent to the Office, and such delay suggests weaknesses in the organization of the move and the processing of/accounting for other papers.

This is not evidence of a system upon which and/or at a time one might rely for dependability.

The discussion of a showing as to unavoidable delay is set forth in the guidance in the Commentary at MPEP §711.03(c)(II), which provides in pertinent part:

***

2.Unavoidable Delay

As discussed above, "unavoidable" delay is the epitome of "unintentional" delay. Thus, an intentional delay precludes revival under 37 C.F.R..§137(a) ("unavoidable" delay) or 37 C.F.R. §1.137(b) ("unintentional" delay). See Maldague, 10 USPQ2d at 1478.

Decisions on reviving abandoned applications on the basis of "unavoidable" delay have adopted the reasonably prudent person standard in determining if the delay was unavoidable:

> The word 'unavoidable' . . . is applicable to ordinary human affairs, and requires no more or greater care or diligence than is generally used and observed by prudent and careful men in relation to their most important business. It permits them in the exercise of this care to rely upon the ordinary and trustworthy agencies of mail and telegraph, worthy and reliable employees, and such other means and instrumentalities as are usually employed in such important business. If unexpectedly, or through the unforeseen fault or imperfection of these agencies and instrumentalities, there occurs a failure, it may properly be said to be unavoidable, all other conditions of promptness in its rectification being present.

In re Mattullath, 38 App. D.C. 497, 514-15 (1912)(quoting Pratt, 1887 Dec. Comm'r Pat. 31, 32-33 (1887)); see also Winkler v. Ladd, 221 F. Supp. 550, 552, 138 USPQ 666, 667-68 (D.D.C. 1963), aff'd, 143 USPQ 172 (D.C. Cir. 1963); Ex parte Henrich, 1913 Dec. Comm'r Pat. 139, 141 (1913). In addition, decisions on revival are made on a "case-by-case basis, taking all the facts and circumstances into account." Smith v. Mossinghoff, 671 F.2d 533, 538, 213 USPQ 977, 982 (D.C. Cir. 1982). Finally, a petition cannot be granted where a petitioner has failed to meet his or her burden of establishing that the delay was "unavoidable." Haines v. Quigg, 673 F. Supp. 314, 316-17, 5 USPQ2d 1130, 1131-32 (N.D. Ind. 1987).

A delay resulting from an error (e.g., a docketing error) on the part of an employee in the performance of a clerical function may provide the basis for a showing of "unavoidable" delay, provided it is shown that:

> (A)the error was the cause of the delay at issue;
>
> (B)there was in place a business routine for performing the clerical function that could reasonably be relied upon to avoid errors in its performance; and
> (C)the employee was sufficiently trained and experienced with regard to the function and routine for its performance that reliance upon such employee represented the exercise of due care.

See In re Egbers, 6 USPQ2d 1869, 1872 (Comm'r Pat. 1988), rev'd on other grounds sub nom., Theodor Groz & Sohne & Ernst Bechert Nadelfabrik KG v. Quigg, 10 USPQ2d 1787 (D.D.C. 1988); In re Katrapat, 6 USPQ2d 1863, 1867-68 (Comm'r Pat. 1988). For example, where an application becomes abandoned as a consequence of a change of correspondence address (the Office action being mailed to the old, uncorrected address and failing to reach the applicant in sufficient time to permit a timely reply) an adequate showing of "unavoidable" delay will require a showing that due care was taken to adhere

to the requirement for prompt notification in each concerned application of the change of address (see MPEP § 601.03), and must include an adequate showing that a timely notification of the change of address was filed in the application concerned, and in a manner reasonably calculated to call attention to the fact that it was a notification of a change of address. The following do not constitute proper notification of a change in correspondence address:

> (A)the mere inclusion, in a paper filed in an application for another purpose, of an address differing from the previously provided correspondence address, without mention of the fact that an address change was being made;
>
> (B)the notification on a paper listing plural applications as being affected (except as provided for under the Customer Number practice - see MPEP § 403); or
>
> (C)the lack of notification, or belated notification, to the U.S. Patent and Trademark Office of the change in correspondence address.

Delay resulting from the lack of knowledge or improper application of the patent statute, rules of practice or the MPEP, however, does not constitute "unavoidable" delay. See Haines, 673 F. Supp. at 317, 5 USPQ2d at 1132; Vincent v. Mossinghoff, 230 USPQ 621, 624 (D.D.C. 1985); Smith v. Diamond, 209 USPQ 1091 (D.D.C. 1981); Potter v. Dann, 201 USPQ 574 (D.D.C. 1978); Ex parte Murray, 1891 Dec. Comm'r Pat. 130, 131 (1891). For example, as 37 C.F.R. 1.116 and 1.135(b) are manifest that proceedings concerning an amendment after final rejection will not operate to avoid abandonment of the application in the absence of a timely and proper appeal, a delay is not "unavoidable" when the applicant simply permits the maximum extendable statutory period for reply to a final Office action to expire while awaiting a notice of allowance or other action.

Likewise, as a "reasonably prudent person" would file papers or fees in compliance with 37 C.F.R. §1.8 or §1.10 to ensure their timely filing in the USPTO, as well as preserve adequate evidence of such filing, a delay caused by an applicant's failure to file papers or fees in compliance with 37 C.F.R. §1.8 and §1.10 does not constitute "unavoidable" delay. See Krahn, 15 USPQ2d at 1825. Finally, a delay caused by an applicant's lack of knowledge or improper application of the patent statute, rules of practice or the MPEP is not rendered "unavoidable" due to: (A) the applicant's reliance upon oral advice from USPTO employees; or (B) the USPTO's failure to advise the applicant of any deficiency in sufficient time to permit the applicant to take corrective action. See In re Sivertz, 227 USPQ 255, 256 (Comm'r Pat. 1985).

35 U.S.C. §133 and §151 each require a showing that the "delay" was "unavoidable," which requires not only a showing that the delay which resulted in the abandonment of the application was unavoidable, but also a showing of unavoidable delay until the filing

of a petition to revive. See In re Application of Takao, 17 USPQ2d 1155 (Comm'r Pat. 1990).

The burden of continuing the process of presenting a grantable petition in a timely manner likewise remains with the applicant until the applicant is informed that the petition is granted. Id. at 1158. Thus, an applicant seeking to revive an "unavoidably" abandoned application must cause a petition under 37 C.F.R. §1.137(a) to be filed without delay (i.e., promptly upon becoming notified, or otherwise becoming aware, of the abandonment of the application).
An applicant who fails to file a petition under 37 C.F.R. §1.137(a) "promptly" upon becoming notified, or otherwise becoming aware, of the abandonment of the application will not be able to show that the entire delay in filing the required reply from the due date for the reply until the filing of a grantable petition pursuant to 37 C.F.R. §1.137(a) was unavoidable. The removal of the language in 37 C.F.R. §1.137(a) requiring that any petition thereunder be "promptly filed after the applicant is notified of, or otherwise becomes aware of, the abandonment" should **not** be viewed as: (A) permitting an applicant, upon becoming notified, or otherwise becoming aware, of the abandonment of the application, to delay the filing of a petition under 37 C.F.R. §1.137(a); or (B) changing (or modifying) the result in In re Application of S, 8 USPQ2d 1630 (Comm'r Pat. 1988), in which a petition under 37 C.F.R. §1.137(a) was denied due to the applicant's deliberate deferral in filing a petition under 37 C.F.R. § 1.137. An applicant who deliberately chooses to delay the filing of a petition under 37 C.F.R. §1.137 (as in Application of S, 8 USPQ2d at 1632) will not be able to show that "the entire delay in filing the required reply from the due date for the reply until the filing of a grantable petition pursuant to [37 C.F.R. §1.137(a)] was unavoidable" or even make an appropriate statement that "the entire delay in filing the required reply from the due date for the reply until the filing of a grantable petition pursuant to [37 C.F.R. §1.137(b)] was unintentional."

The dismissal or denial of a petition under 37 C.F.R. §1.137(a) does not preclude an applicant from obtaining relief pursuant to 37 C.F.R. 1. §137(b) on the basis of unintentional delay (unless the decision dismissing or denying the petition under 37 C.F.R. 1.137(a) indicates otherwise). In such an instance, a petition under 37 C.F.R. 1.137(b) may be filed accompanied by the fee set forth in 37 C.F.R. §1.17(m), the required reply, a statement that the entire delay in filing the required reply from the due date for the reply until the filing of a grantable petition pursuant to 37 C.F.R. §1.137(b) was unintentional, and any terminal disclaimer required by 37 C.F.R. §1.137(c).
Form PTO/SB/61 or PTO/SB/61PCT may be used to file a petition for revival of an unavoidably abandoned application.

***

As to Unintentional Delay

Petitioner suggests at the end of the first paragraph at page one of the petition, that Petitioner alternatively seeks relief pursuant to 37 C.F.R. §1.137(b)—"because the failure to reply was unavoidable *** (*or if determined by the Examiner unintentional*)." (Emphasis supplied.)

It is not the role of the Office to guess at or otherwise interpret Petitioner's intentions.

If Petitioner seeks to request revival of the instant matter properly pursuant to 37 C.F.R. §1.137(b), it is Petitioner's responsibility to so plead with a proper petition fee/fee authorization, reply and statement of unintentional delay.

Out of an abundance of caution, Petitioners always are reminded that the filing of a petition under 37 C.F.R. §1.181 does not toll any periods that may be running any action by the Office and a petition seeking relief under the regulation must be filed within two (2) months of the act complained of (*see*: 37 C.F.R. §1.181(f)), and that those registered to practice and all others who make representations before the Office are reminded to inquire into the underlying facts of representations made to the Office and support averments with the appropriate documentation–since all owe to the Office the continuing duty to disclose.[2]

The availability of applications and application papers online to applicants/practitioners who diligently associate their Customer Number with the respective application(s) now provides an applicant/practitioner on-demand information as to events/transactions in an application.

STATUTES, REGULATIONS

Congress has authorized the Commissioner to "revive an application if the delay is shown to the satisfaction of the Commissioner to have been "unavoidable." 35 U.S.C. §133 (1994).

Allegations as to the Request to
Withdraw the Holding of Abandonment

The guidance in the Commentary at MPEP §711.03(c)(I) specifies the showing required and how it is to be made and supported.

Petitioner failed to make the showing required.

---

[2] See supplement of 17 June, 1999. The Patent and Trademark Office is relying on Petitioner's duty of candor and good faith and accepting a statement made by Petitioner. See Changes to Patent Practice and Procedure, 62 Fed. Reg. at 53160 and 53178, 1203 Off. Gaz. Pat. Office at 88 and 103 (responses to comments 64 and 109)(applicant obligated under 37 C.F.R. §10.18 to inquire into the underlying facts and circumstances when providing statements to the Patent and Trademark Office).

As to Allegations of
Unavoidable Delay

The requirements under 37 C.F.R. §1.137(a) have not been satisfied as of this writing in that Petitioner failed to make the showing of unavoidable delay as required.

As to Allegations of
Unintentional Delay

The requirements under 37 C.F.R. §1.137(b) have not been satisfied as of this writing in that Petitioner failed to make the express statement of unintentional delay as required—and, in fact, may not be the proper person to do so in that it appears that the instant application was under the control of another at the time the application went abandoned.

CONCLUSION

Accordingly, the petition under 37 C.F.R. §1.137(a) is **dismissed**; the petition under 37 C.F.R. §1.181 is **dismissed**; and the petition under 37 C.F.R. §1.137(b) is **dismissed**.

ALTERNATIVE VENUE

Should Petitioner wish to revive the application, Petitioner may wish to properly file a petition to the Commissioner requesting revival of an application abandoned due to unintentional delay under 37 C.F.R. §1.137(b). (See:
http://www.uspto.gov/web/offices/pac/mpep/documents/0700_711_03_c.htm#sect711.03c)

A petition to revive on the grounds of unintentional delay must be filed promptly and such petition must be accompanied by the reply, the petition fee, a terminal disclaimer and fee where appropriate and a statement that "the entire delay in filing the required reply from the due date for the reply until the filing of a grantable petition was unintentional." (The statement is in the form available online.)

Further correspondence with respect to this matter should be addressed as follows:

By Mail: Mail Stop PETITION
Commissioner for Patents
P. O. Box 1450
Alexandria, VA 22313-1450

By hand: U. S. Patent and Trademark Office
Customer Service Window, Mail Stop Petitions
Randolph Building
401 Dulany Street
Alexandria, VA 22314

By facsimile: **(571) 273-8300**
Attn: Office of Petitions

Telephone inquiries regarding this decision may be directed to the undersigned at (571) 272-3214—it is noted, however, that all practice before the Office is in writing (see: 37 C.F.R. §1.2[3]) and the proper authority for action on any matter in this regard are the statutes (35 U.S.C.), regulations (37 C.F.R.) and the commentary on policy (MPEP). Therefore, no telephone discussion may be controlling or considered authority for Petitioner's action(s).

/John J. Gillon, Jr./
John J. Gillon, Jr.
Senior Attorney
Office of Petitions

---

[3] The regulations at 37 C.F.R. §1.2 provide:

§1.2 Business to be transacted in writing.

All business with the Patent and Trademark Office should be transacted in writing. The personal attendance of applicants or their attorneys or agents at the Patent and Trademark Office is unnecessary. The action of the Patent and Trademark Office will be based exclusively on the written record in the Office. No attention will be paid to any alleged oral promise, stipulation, or understanding in relation to which there is disagreement or doubt.

UNITED STATES PATENT AND TRADEMARK OFFICE

Commissioner for Patents
United States Patent and Trademark Office
P.O. Box 1450
Alexandria, VA 22313-1450
www.uspto.gov

IP DEPARTMENT
SONNENSCHEIN NATH
& ROSENTHAL LLP
P.O. BOX 061080
WACKER DRIVE STATION
CHICAGO IL 60606

COPY MAILED

JUN 15 2009

OFFICE OF PETITIONS

In re Application of :
Fries, et al. :
Application No. 10/787,345 : DECISION
Filed: 26 February, 2004 :
Attorney Docket No. 11000060-0040 :

This is a decision on the petition filed on 21 April, 2009, under the provisions of 37 C.F.R. §1.137(b), seeking revival of the application as having been abandoned due to unintentional delay.

It is not apparent whether the person signing the statement of unintentional delay was in a position to have firsthand or direct knowledge of the facts and circumstances of the delay at issue.

Nevertheless, such statement is being construed as having been made as the result of a reasonable inquiry into the facts and circumstances of such delay.[1] In the event that such an inquiry has not been made, Petitioner must make such an inquiry.

If such inquiry results in the discovery that it is not correct that the entire delay in filing the required reply from the due date for the reply until the filing of a grantable petition pursuant to 37 C.F.R. §1.137(b) was unintentional, Petitioner must notify the Office.

The petition as considered under 37 C.F.R. §1.137(b) is **GRANTED**.

[1] See 37 C.F.R. §10.18(b) and Changes to Patent Practice and Procedure; Final Rule Notice, 62 Fed. Reg. 53131, 53178 (October 10, 1997), 1203 Off. Gaz. Pat. Office 63, 103 (October 21, 1997).

As to Allegations of
Unintentional Delay

The requirements of a grantable petition pursuant to 37 C.F.R. §1.137(b) are the petition and fee therefor, a reply, a proper statement of unintentional delay under the regulation, and, where applicable, a terminal disclaimer and fee. (However, it does not appear that a terminal disclaimer and fee are due here.)

Petitioners attentions always are directed to the Commentary at MPEP §711.03(c) for guidance as to satisfying the requirements for relief under 37 C.F.R. §1.137.

BACKGROUND

The record reflects as follows:

Petitioner failed to reply to the non-final Office action mailed on 19 December, 2007, with reply due absent extension of time on or before 19 March, 2008.

The application went abandoned by operation of law after midnight 19 March, 2008.

On 12 May, 2008, Petitioner's office sought status in the matter after it appears that Counsel Michael W. Maddox (Reg. No. 47,764) moved from one law firm to another, and on 27 August, 2008, Petitioner's office attempted to revoke/submit a power of attorney, however, the Office Noticed the former office of Mr. Maddox that the required certificate pursuant to 37 C.F.R. §3.73(b) had not been received.

The Office mailed the Notice of Abandonment on 23 September, 2008.

On 30 October, 2008, Petitioner filed a revocation/power of attorney, which the Office acknowledged on 7 November, 2008.

On 13 November, 2008, Petitioner filed a petition averring, *inter alia*, non-receipt, and sought withdrawal of the holding of abandonment pursuant to 37 C.F.R. §1.181, but failed to comply with the express requirements for showing required herein as set forth at MPEP 711.03(c)(I)—including but not limited to the statement of search and non-discovery, the description as to the docketing and/or calendaring system and its reliability, and required documentary support of the docket sheet (or file jacket cover) of the instant application and the due date calendar for the reply in question. Moreover, there is no statement from Mr. Maddox as the registered practitioner who oversaw the matter at the time of abandonment, nor from Petitioner. Thus, Petitioner failed to demonstrate that the Office action in question was not received (and so docketed, that the system provides sufficient and reasonable reliability and that it therefore does not appear either on the application docket sheet or on the due-date calendar for reply. Petitioner

averred that the delay was unavoidable and expressly invoked the provisions of the regulations under 37 C.F.R. §1.137(a), and, the fee was authorized and was charged to Deposit Account 19-3140, however, Petitioner failed to satisfy the regulatory (showing) requirements pursuant to the rule. The petition was dismissed on 15 December, 2008 From the history of this matter, as set out above, it was apparent that Petitioner's office attempted to move the prosecution of the instant application from one law firm to another and in doing so did not keep track of the Office action in question. This not being the basis for a petition to revive pursuant to 37 C.F.R. §1.137(a) or a request to withdraw the holding of abandonment pursuant to 37 C.F.R. §1.181, the petition was dismissed on 15 December, 2008.

On 17 February, 2009, Petitioner reasserted his petitions pursuant to 37 C.F.R. §1.137(a) and pursuant to 37 C.F.R. §1.181—and threw in a suggestion of a request for relief pursuant to 37 C.F.R. §1.137(b). Once again Petitioner failed to satisfy the requirements as set out in the decision of 15 December, 2008, and failed to satisfy the requirements for relief pursuant to 37 C.F.R. §1.137(b) as set out above, and the petition was dismissed on 16 March, 2009—with a caution to Petitioner to ensure that any person making the statement of unintentional delay was the proper person to make the statement of unintentional delay(i.e., aware of the nature of the delay or having made the requisite inquiry).

On 21 April, 2009, Petitioner filed, *inter alia*, a petition pursuant to 37 C.F.R. §1.137(b), with fee, with a statement of unintentional delay and a reply was in the form of an amendment.

It is not apparent whether the person signing the statement of unintentional delay was in a position to have firsthand or direct knowledge of the facts and circumstances of the delay at issue.

Nevertheless, such statement is being construed as having been made as the result of a reasonable inquiry into the facts and circumstances of such delay.[2] In the event that such an inquiry has not been made, Petitioner must make such an inquiry.

If such inquiry results in the discovery that it is not correct that the entire delay in filing the required reply from the due date for the reply until the filing of a grantable petition pursuant to 37 C.F.R. §1.137(b) was unintentional, Petitioner must notify the Office.

The availability of applications and application papers online to applicants/practitioners who diligently associate their Customer Number with the respective application(s) now provides an applicant/practitioner on-demand information as to events/transactions in an application.

---

[2] See 37 C.F.R. §10.18(b) and Changes to Patent Practice and Procedure; Final Rule Notice, 62 Fed. Reg. 53131, 53178 (October 10, 1997), 1203 Off. Gaz. Pat. Office 63, 103 (October 21, 1997).

Out of an abundance of caution, Petitioners always are reminded that those registered to practice and all others who make representations before the Office **must** inquire into the underlying facts of representations made to the Office and support averments with the appropriate documentation–since all owe to the Office the continuing duty to disclose.[3]

STATUTES, REGULATIONS AND ANALYSIS

Congress has authorized the Commissioner to "revive an application if the delay is shown to the satisfaction of the Commissioner to have been "unavoidable." 35 U.S.C. §133 (1994).[4] The regulations at 37 C.F.R. §1.137(a) and (b) set forth the requirements for a Petitioner to revive a previously unavoidably or unintentionally, respectively, abandoned application under this congressional grant of authority.

Unintentional delays are those that do not satisfy the very strict statutory and regulatory requirements of unavoidable delay, and also, by definition, are not intentional.[5]))

As to Allegations of Unintentional Delay

The requirements of a grantable petition pursuant to 37 C.F.R. §1.137(b) are the petition and fee therefor, a reply, a proper statement of unintentional delay under the regulation, and, where applicable, a terminal disclaimer and fee.

It appears that the requirements under 37 C.F.R. §1.137(b) have been satisfied.

CONCLUSION

Accordingly, the petition under 37 C.F.R. §1.137(b) is **granted**.

---

[3] See supplement of 17 June, 1999. The Patent and Trademark Office is relying on petitioner's duty of candor and good faith and accepting a statement made by Petitioner. See Changes to Patent Practice and Procedure, 62 Fed. Reg. at 53160 and 53178, 1203 Off. Gaz. Pat. Office at 88 and 103 (responses to comments 64 and 109)(applicant obligated under 37 C.F.R. §10.18 to inquire into the underlying facts and circumstances when providing statements to the Patent and Trademark Office).

[4] 35 U.S.C. §133 provides:

35 U.S.C. §133 Time for prosecuting application.

Upon failure of the applicant to prosecute the application within six months after any action therein, of which notice has been given or mailed to the applicant, or within such shorter time, not less than thirty days, as fixed by the Commissioner in such action, the application shall be regarded as abandoned by the parties thereto, unless it be shown to the satisfaction of the Commissioner that such delay was unavoidable.

[5] Therefore, by example, an unintentional delay in the reply might occur if the reply and transmittal form are to be prepared for shipment by the US Postal Service, but other pressing matters distract one's attention and the mail is not timely deposited for shipment.

The instant application is released to the Technology Center/AU 2614 for further processing in due course.

Petitioner may find it beneficial to view Private PAIR within a fortnight of the instant decision to ensure that the revival has been acknowledged by the TC/AU in response to this decision. It is noted that all inquiries with regard to that change in status need be directed to the OTC/AU where that change of status must be effected—that does not occur in the Office of Petitions.

Telephone inquiries regarding this decision may be directed to the undersigned at (571) 272-3214—it is noted, however, that all practice before the Office is in writing (see: 37 C.F.R. §1.2[6]) and the proper authority for action on any matter in this regard are the statutes (35 U.S.C.), regulations (37 C.F.R.) and the commentary on policy (MPEP). Therefore, no telephone discussion may be controlling or considered authority for Petitioner's action(s).

/John J. Gillon, Jr./
John J. Gillon, Jr.
Senior Attorney
Office of Petitions

---

[6] The regulations at 37 C.F.R. §1.2 provide:

§1.2 Business to be transacted in writing.

All business with the Patent and Trademark Office should be transacted in writing. The personal attendance of applicants or their attorneys or agents at the Patent and Trademark Office is unnecessary. The action of the Patent and Trademark Office will be based exclusively on the written record in the Office. No attention will be paid to any alleged oral promise, stipulation, or understanding in relation to which there is disagreement or doubt.

SPE RESPONSE FOR CERTIFICATE OF CORRECTION

Paper No.: X

DATE : October 02,2007

TO SPE OF : ART UNIT 2624

SUBJECT : Request for Certificate of Correction for Appl. No.: 10/787,351 Patent No.: 7078823 B2

A response is requested with respect to a request for a certificate of correction.

With respect to the change(s) requested to correct Office and/or Applicant's errors, should the patent read as shown in the certificate of correction attached herewith or the COCIN document(s), in IFW images for the above-identified patented application? No new matter should be introduced, nor should the scope or meaning of the claims be changed.

If the response is for an IFW, within 7 days, please complete and forward the response, to the employee (named below) via scanning into application images, using document code COCX.

DO NOT SENT TO ATTORNEY

If the response is for a paper file wrapper, please complete the response and forward the response with the paper file wrapper, to the employee (named below), within 7 days, to:

Certificates of Correction Branch (CofC)
South Tower - 9A22
Palm Location 7580

LAMONTE NEWSOME
Certificates of Correction Branch
703-308-9390 ext. 112

Thank You For Your Assistance

The request for issuing the above-identified correction(s) is hereby:
Note your decision on the appropriate box.

☑ **Approved**	**All** changes apply.
☐ **Approved in Part**	Specify below which changes **do not** apply.
☐ **Denied**	State the reasons for denial below.

Comments: _____

_____

_____

_____

_____

Kenneth Parker 2815

SPE **Art Unit**

PTOL-306 (REV. 7/03) **U.S. DEPARTMENT OF COMMERCE Patent and Trademark Office**

UNITED STATES PATENT AND TRADEMARK OFFICE

Commissioner for Patents
United States Patent and Trademark Office
P. O. Box 1450
Alexandria, VA 22313-1450
www.uspto.gov

KATTEN MUCHIN ROSENMAN LLP
575 MADISON AVENUE
NEW YORK, NY 10022-2585

COPY MAILED

MAY 14 2007

OFFICE OF PETITIONS

In re Application of :
Robert Linley Muir :
Application No. 10/787,355 : ON PETITION
Filed: February 25, 2004 :
Attorney Docket No. FBR 21.015 :

This is a decision on the petition under 37 CFR 1.137(b), filed December 13, 2006, to revive the above-identified application.

The petition is **GRANTED**.

The above-identified application became abandoned for failure to reply in a timely manner to the non-final Office action mailed June 25, 2004, which set a shortened statutory period for reply of three (3) months. No extension of time under the provisions of 37 CFR 1.136(a) were obtained. Accordingly, the above-identified application became abandoned on September 26, 2004.

It is not apparent whether the person signing the statement of unintentional delay was in a position to have firsthand or direct knowledge of the facts and circumstances of the delay at issue. Nevertheless, such statement is being treated as having been made as the result of a reasonable inquiry into the facts and circumstances of such delay. See 37 CFR 10.18(b) and Changes to Patent Practice and Procedure; Final Rule Notice, 62 Fed. Reg. 53131, 53178 (October 10, 1997), 1203 Off. Gaz. Pat. Office 63, 103 (October 21, 1997). In the event that such an inquiry has not been made, petitioner must make such an inquiry. If such inquiry results in the discovery that it is not correct that the entire delay in filing the required reply from the due date for the reply until the filing of a grantable petition pursuant to 37 CFR 1.137(b) was unintentional, petitioner must notify the Office.

The person signing the instant petition also requests a change of correspondence address to the address given in the instant petition. There is, however, no indication that the person signing the instant petition was ever given a power of attorney or authorization of agent to prosecute the above-identified application. If the person signing the instant petition desires to receive future correspondence regarding this application, the appropriate power of attorney or authorization of agent must be submitted. While a courtesy copy of this decision is being mailed to the person signing the instant petition, all future correspondence will be directed to the address currently of record until such time as appropriate instructions are received to the contrary.

Telephone inquiries concerning this decision should be directed to Irvin Dingle at (571) 272-3210.

This matter is being referred to Technology Center AU 3713 for further processing.

Irvin Dingle
Petitions Examiner
Office of Petitions

cc: Christopher N. George
500 West Madison Street, Suite 3400
Chicago, IL 60661

UNITED STATES PATENT AND TRADEMARK OFFICE

Commissioner for Patents
United States Patent and Trademark Office
P.O. Box 1450
Alexandria, VA 22313-1450
www.uspto.gov

KATTEN MUCHIN ROSENMAN LLP
575 MADISON AVENUE
NEW YORK, NY 10022-2585

COPY MAILED

MAR 19 2007

OFFICE OF PETITIONS

In re Application of :
Yuji Kinuzawa et al :
Application No. 10/787,357 : ON PETITION
Filed: February 25, 2004 :
Attorney Docket No. FUJMO 20.952 :

This is a decision on the petition under 37 CFR 1.137(b), filed May 4, 2006, to revive the above-identified application.

The petition is **GRANTED.**

The application became abandoned for failure to reply in a timely manner to the non-final Office action mailed, November 1, 2005, which set a shortened statutory period for reply of three (3) months. No extensions of time under the provisions of 37 CFR 1.136(a) were obtained. Accordingly, the application became abandoned on February 2, 2006. A Notice of Abandonment was mailed on May 16, 2006, subsequent to the filing of the present petition to revive.

The petition satisfies the requirements of 37 CFR 1.137(b) in that petitioner has supplied (1) the reply, (2) the petition fee of $1,500, and (3) a proper statement of unintentional delay. Accordingly, the failure to timely reply to the non-final Office action of November 1, 2005 is accepted as being unintentionally delayed.

This application is being referred to Technology Center AU 2617 for appropriate action in the normal course of business on the reply received with the petition on May 4, 2006.

Telephone inquiries concerning this decision should be directed to the undersigned at (571) 272-3218.

Frances Hicks
Petitions Examiner
Office of Petitions

UNITED STATES PATENT AND TRADEMARK OFFICE

UNITED STATES DEPARTMENT OF COMMERCE
United States Patent and Trademark Office
Address: COMMISSIONER FOR PATENTS
P.O. Box 1450
Alexandria, Virginia 22313-1450
www.uspto.gov

SUGHRUE MION, PLLC
2100 PENNSYLVANIA AVENUE, N.W.
SUITE 800
WASHINGTON, DC 20037

Mail Date: 04/20/2010

Applicant	: Stefan Ansorge	: DECISION ON REQUEST FOR
Patent Number	: 7590131	: RECALCULATION of PATENT
Issue Date	: 09/15/2009	: TERM ADJUSTMENT IN VIEW
Appliction No	: 10/787,358	: OF WYETH AND NOTICE OF INTENT TO
Filed	: 02/27/2004	: ISSUE CERTIFICATE OF CORRECTION
		:

The Request for Recalculation is **GRANTED** to the extent indicated.

The patent term adjustment has been determined to be **1573** days. The USPTO will *sua sponte* issue a certificate of correction reflecting the amount of PTA days determined by the recalculation.

Prior to the issuance of the certificate of correction, the USPTO will afford patentee an opportunity to be heard and request reconsideration. Accordingly, patentee has **one month or thirty (30) days**, whichever is longer, to file a request for reconsideration of this patent term adjustment calculation. See 35 U.S.C. 154(b)(3)(B)(ii) and 37 CFR 1.322(a)(4). No extensions of time will be granted under 37 CFR 1.136.

Patentee should use document code PET.OP if electronically filing a request for reconsideration of this patent term adjustment calculation. The patentee must also include the information required by 37 CFR 1.705(b)(2) and the fee required by 37 CFR 1.18(e). If patentee does not file a timely request for reconsideration of this patent term adjustment calculation including the information required by 37 CFR 1.705(b)(2) and the fee required by 37 CFR 1.18(e), the USPTO will issue a certificate of correction reflecting the PTA determination noted above.

Patentee should be aware that in order to preserve the right to review in the United States District Court for the District of Columbia of the USPTO patent term adjustment determination, patentee must ensure that he or she also take the steps required under 35 U.S.C. 154(b)(4)(A) in a timely manner. Nothing in the request for recalculation should be construed as providing an alternative time frame for commencing a civil action under 35 U.S.C. 154(b)(4)(A).

Any questions concerning this decision should be directed to the Office of Patent Legal Administration at 571-272-7702.

UNITED STATES PATENT AND TRADEMARK OFFICE

COMMISSIONER FOR PATENTS
UNITED STATES PATENT AND TRADEMARK OFFICE
P.O. BOX 1450
ALEXANDRIA, VA 22313-1450
www.uspto.gov

FOLEY AND LARDNER LLP
SUITE 500
3000 K STREET NW
WASHINGTON DC 20007

COPY MAILED

DEC 31 2007

OFFICE OF PETITIONS

In re Application of :
Yoshiaki Tanaka : DECISION ON APPLICATION
Application No. 10/787,360 : FOR
Filed: February 27, 2004 : PATENT TERM ADJUSTMENT
Attorney Docket No.016887-1101:

This is a decision on the "Request for Reconsideration of Patent Term Adjustment Under 37 CFR §1.704(d)," filed October 9, 2007. Applicants request that the initial determination of patent term adjustment under 35 U.S.C. 154(b) be corrected from nine (9) days to three hundred twenty-two (322) days partly on the basis of the Office taking in excess of three years to issue the patent.

To the extent that the instant application for patent term adjustment requests reconsideration of the patent term adjustment as it relates to the Office's failure to issue the patent within 3 years of the filing date, a decision is being **held in abeyance** until after the actual patent date. Knowledge of the actual date the patent issues is required to calculate the amount, if any, of additional patent term patentee is entitled to for Office failure to issue the patent within 3 years. See § 1.703(b).

Patentee is given **TWO (2) MONTHS** from the issue date of the patent to file a written request for reconsideration of the patent term adjustment for Office failure to issue the patent within 3 years. A copy of this decision should accompany the request. Patentee may seek such consideration without payment of an additional fee. However, as to all other bases for seeking reconsideration of the patent term adjustment indicated in the patent, all requirements of § 1.705(d) must be met. Requests for reconsideration on other bases must be timely filed and must include payment of the required fee.

The application for patent term adjustment is **GRANTED** to the extent indicated herein.

The Office has updated the PAIR screen to reflect that the correct Patent Term Adjustment (PTA) determination at the time of the mailing of the notice of allowance is one hundred five **(105)** days. A copy of the updated PAIR screen, showing the correct determination, is enclosed.

On July 9, 2007, the Office mailed the Determination of Patent Term Adjustment under 35 U.S.C. 154(b) in the above-identified application. The Notice stated that the patent term adjustment (PTA) to date is 9 days. On October 9, 2007, applicants timely submitted the instant application for patent term adjustment[1]. Applicant's basis for the application for patent term adjustment is the miscalculation of delay from the August 10, 2005 mailing date of the Non Final Rejection instead of from the proper November 14, 2005 mailing date of the Notice of Restarted Response Period. As applicant's response was filed on February 14, 2006, applicants assert that the total period of applicant delay should be zero(0)days, not 96 days[2].

In this instance, applicants are correct. Any delay should be calculated based on the date of the Restarted Response Period and not based on the date of the mailing of the original Office action. As applicant's response was received within the three month time period set forth in 37 CFR 1.704(b), there was no applicant delay within the meaning of §1.704(b) (i.e. November 14, 2005 to February 14, 2006).

In view thereof, the correct determination of patent term adjustment at the time of the mailing of the notice of allowance is 105 days.

Receipt of the $200.00 fee set forth in 37 CFR 1.18(e) is acknowledged. No additional fees are required.

The application is being forwarded to the Publications Division for issuance of a patent. The patent term adjustment indicated on the patent (as shown on the Issue Notification mailed about three weeks prior to patent issuance) will include any additional adjustment accrued both for Office delay in issuing

---

[1] PALM records indicate that the Issue Payment was filed on October 9, 2007.
[2] Applicant does not dispute the period of adjustment of 105 days for Office delay.

the patent more than four months after payment of the issue fee and satisfaction of all outstanding requirements, and for the Office taking in excess of three years to issue the patent (to the extent that the three-year period does not overlap with periods already accorded).

Telephone inquiries specific to this matter should be directed to Petitions Attorney Charlema Grant at (571) 272-3215.

Nancy Johnson
Senior Petitions Attorney
Office of Petitions

Enclosure: Copy of REVISED PAIR Screen

Day : Friday
Date: 12/28/2007

PALM INTRANET

Time: 16:21:10

PTA Calculations for Application: 10/787360			
Application Filing Date:	02/27/2004	PTO Delay (PTO):	105
Issue Date of Patent:		Three Years:	0
Pre-Issue Petitions:	0	Applicant Delay (APPL):	96
Post-Issue Petitions:	0	Total PTA (days):	105
PTO Delay Adjustment:	96		

File Contents History

Number	Date	Contents Description	PTO	APPL	START
53	12/28/2007	ADJUSTMENT OF PTA CALCULATION BY PTO	96		
46	07/09/2007	MAIL NOTICE OF ALLOWANCE			
45	07/05/2007	ISSUE REVISION COMPLETED			
44	06/27/2007	ALLOWED CASE RETURNED TO THE EXAMINER FOR CLERICAL PROCESSING			
43	06/27/2007	DOCUMENT VERIFICATION			
42	06/27/2007	NOTICE OF ALLOWANCE DATA VERIFICATION COMPLETED			
41	06/25/2007	NOTICE OF ALLOWABILITY			
40	04/13/2007	DATE FORWARDED TO EXAMINER			
39	04/12/2007	RESPONSE AFTER NON-FINAL ACTION			
38	01/12/2007	MAIL NON-FINAL REJECTION			
37	01/08/2007	NON-FINAL REJECTION			
36	11/02/2006	DATE FORWARDED TO EXAMINER			
35	10/27/2006	RESPONSE AFTER NON-FINAL ACTION			
34	07/27/2006	MAIL NON-FINAL REJECTION			
33	07/24/2006	NON-FINAL REJECTION			
32	07/07/2006	DATE FORWARDED TO EXAMINER			
31	06/30/2006	AMENDMENT AFTER FINAL REJECTION			
30	05/02/2006	MAIL FINAL REJECTION (PTOL - 326)			
29	05/01/2006	FINAL REJECTION			
28	02/14/2006	INFORMATION DISCLOSURE STATEMENT CONSIDERED			
27	10/26/2004	INFORMATION DISCLOSURE STATEMENT CONSIDERED			
26	02/27/2004	INFORMATION DISCLOSURE STATEMENT CONSIDERED			

25	02/23/2006	DATE FORWARDED TO EXAMINER			
24	02/14/2006	RESPONSE AFTER NON-FINAL ACTION		96	19
23	02/14/2006	NEW OR ADDITIONAL DRAWING FILED			
22.7	02/14/2006	INFORMATION DISCLOSURE STATEMENT (IDS) FILED			
22	02/14/2006	INFORMATION DISCLOSURE STATEMENT (IDS) FILED			
21	11/14/2005	MAIL NOTICE OF RESTARTED RESPONSE PERIOD			
20	11/10/2005	LETTER RESTARTING PERIOD FOR RESPONSE (I.E. LETTER RE: REFERENCES)			
19	08/10/2005	MAIL NON-FINAL REJECTION	105		-1
18	08/08/2005	NON-FINAL REJECTION			
17	10/26/2004	PRELIMINARY AMENDMENT			
16.7	10/26/2004	INFORMATION DISCLOSURE STATEMENT (IDS) FILED			
16	10/26/2004	INFORMATION DISCLOSURE STATEMENT (IDS) FILED			
15	10/26/2004	WORKFLOW INCOMING AMENDMENT IFW			
14	05/25/2004	IFW TSS PROCESSING BY TECH CENTER COMPLETE			
13	02/27/2004	REQUEST FOR FOREIGN PRIORITY (PRIORITY PAPERS MAY BE INCLUDED)			
12	02/27/2004	REFERENCE CAPTURE ON IDS			
11.7	02/27/2004	INFORMATION DISCLOSURE STATEMENT (IDS) FILED			
11	02/27/2004	INFORMATION DISCLOSURE STATEMENT (IDS) FILED			
10	02/27/2004	PRELIMINARY AMENDMENT			
9	05/25/2004	CASE DOCKETED TO EXAMINER IN GAU			
8	05/15/2004	APPLICATION RETURN FROM OIPE			
7	05/15/2004	APPLICATION RETURN TO OIPE			
6	05/15/2004	APPLICATION DISPATCHED FROM OIPE			
5	05/17/2004	APPLICATION IS NOW COMPLETE			
4	04/02/2004	CLEARED BY OIPE CSR			
3	04/02/2004	CASE CLASSIFIED BY OIPE			
2	03/10/2004	IFW SCAN & PACR AUTO SECURITY REVIEW			
1	02/27/2004	INITIAL EXAM TEAM NN			

Search Another: Application# Search

UNITED STATES PATENT AND TRADEMARK OFFICE

Commissioner for Patents
United States Patent and Trademark Office
P.O. Box 1450
Alexandria, VA 22313-1450
www.uspto.gov

JONES DAY
222 EAST 41ST ST
NEW YORK NY 10017

MAILED

MAY 1 3 2009

OFFICE OF PETITIONS

In re Patent No. 7,229,636 :
Issue Date: June 12, 2007 :
Application No. 10/787,385 : ON PETITION
Filed: February 26, 2004 :
Attorney Docket No. 12399-001-999 :

This is a decision on the petition, filed March 6, 2009, which is being treated as a petition under 37 CFR 1.137(b) to revive the instant nonprovisional application for failure to timely notify the U.S. Patent and Trademark (USPTO) of the filing of an application in a foreign country, or under a multinational treaty that requires publication of applications eighteen months after filing. *See* 37 CFR 1.137(f).

The petition is **DISMISSED** as moot.

In reply to the Notice of Allowance and Issue Fee(s) Due mailed December 13, 2006, the issue fee was duly paid on March 13, 2007.

On June 12, 2007, U.S. Patent No. 7,229,636 issued on the instant application.

The instant petition was filed March 6, 2009.

Petitioner states that the above-identified application may have become abandoned pursuant to 35 U.S.C. 12 2(b)(2)(B)(iii) for failure to timely notify the Office of the filing of an application in a foreign country or under a multinational international treaty that requires publication of applications eighteen months after filing. Accordingly, petitioner requests that, if the USPTO deems it necessary, the patentee's failure to timely file a Rescission of Previous Nonpublication Request (35 U.S.C. 122(b)(2)(B)(ii)) and, if applicable, Notice of Foreign Filing (35 U.S.C. 122(b)(2)(B)(iii)) be corrected and the Petition for Revival of an Application for Patent Abandoned for Failure to Notify the Office of a Foreign or International Filing (37 CFR 1.137(f)) be retroactively accepted should the USPTO deem it necessary. Petitioner states that PCT/US2006/024685 is not a counterpart application to the above-noted application.

As set forth in MPEP 1305:

> Once the patent has been granted, the U.S. Patent and Trademark Office can take no action concerning it, except as provided in 35 U.S.C. 135, 35 U.S.C. 251 through 256, 35 U.S.C. 302 through 307 and 35 U.S.C. 311 through 316.

Accordingly, once the patent is granted, the Office has no jurisdiction over the patent. Also, see *Aristocrat Technologies Australia v. International Game Technologies* 2008 U.S. App. LEXIS

20060 (Fed. Cir. 2008) "[p]rocedural lapses during examination, should they occur, do not provide grounds of invalidity. Absent proof of inequitable conduct, the examiner's or the applicant's absolute compliance with the internal rules of patent examination becomes irrelevant after the patent has issued." The case was decided September 22, 2008.

The petition fee of $810.00, submitted on March 6, 2009, is being credited to petitioner's deposit account as authorized.

Further correspondence with respect to this matter should be addressed as follows:

By Mail:
Mail Stop PETITION
Commissioner for Patents
Post Office Box 1450
Alexandria, VA 22313-1450

By hand:
U. S. Patent and Trademark Office
Customer Service Window, Mail Stop Petitions
Randolph Building
401 Dulany Street
Alexandria, VA 22314

The centralized facsimile number is **(571) 273-8300.**

Telephone inquiries should be directed to the undersigned at (571) 272-3206.

Liana Walsh
Petitions Examiner
Office of Petitions

UNITED STATES PATENT AND TRADEMARK OFFICE

Commissioner for Patents
United States Patent and Trademark Office
P.O. Box 1450
Alexandria, VA 22313-1450
www.uspto.gov

COPY MAILED

OCT 30 2007

OFFICE OF PETITIONS

SUGHRUE-265550
2100 PENNSYLVANIA AVE. NW
WASHINGTON, DC 20037-3213

In re Application of :
Hajime Saiki, et al. :
Application No. 10/787,406 : DECISION GRANTING PETITION
Filed: February 27, 2004 : UNDER 37 CFR 1.313(c)(2)
Attorney Docket No. Q80151 :

This is a decision on the petition under 37 CFR 1.313(c)(2), filed October 26, 2007, to withdraw the above-identified application from issue after payment of the issue fee.

The petition is **GRANTED**.

The above-identified application is withdrawn from issue for consideration of a submission under 37 CFR 1.114 (request for continued examination). *See* 37 CFR 1.313(c)(2).

Petitioner is advised that the issue fee paid on October 12, 2007 cannot be refunded. If, however, this application is again allowed, petitioner may request that it be applied towards the issue fee required by the new Notice of Allowance.[1]

Telephone inquiries regarding this decision should be directed to April Wise at (571) 272-1642.

This application is being referred to Technology Center AU 2841 for processing of the request for continued examination under 37 CFR 1.114 and for consideration of the concurrently filed information disclosure statement.

Frances Hicks

Frances M. Hicks
Petitions Examiner
Office of Petitions

[1] *The request to apply the issue fee to the new Notice may be satisfied by completing and returning the new Part B – Fee(s) Transmittal Form (along with any balance due at the time of submission). Petitioner is advised that the Issue Fee Transmittal Form* ***must*** *be completed and timely submitted to avoid abandonment of the application.*

UNITED STATES PATENT AND TRADEMARK OFFICE

Commissioner for Patents
United States Patent and Trademark Office
P.O. Box 1450
Alexandria, VA 22313-1450
www.uspto.gov

SUGHRUE-265550
2100 PENNSYLVANIA AVE. NW
WASHINGTON, DC 20037-3213

COPY MAILED

MAR 2 1 2008

In re Application of	:	
Hajime Saiki, et al.	:	
Application No. 10/787,406	:	DECISION GRANTING PETITION
Filed: February 27, 2004	:	UNDER 37 CFR 1.313(c)(2)
Attorney Docket No. Q80151	:	

This is a decision on the petition under 37 CFR 1.313(c)(2), filed March 19, 2008, to withdraw the above-identified application from issue after payment of the issue fee.

The petition is **GRANTED**.

The above-identified application is withdrawn from issue for consideration of a submission under 37 CFR 1.114 (request for continued examination). *See* 37 CFR 1.313(c)(2).

Petitioner is advised that the issue fee paid on February 15, 2008 cannot be refunded. If, however, this application is again allowed, petitioner may request that it be applied towards the issue fee required by the new Notice of Allowance.[1]

Telephone inquiries regarding this decision should be directed to undersigned at (571) 272-1642.

This application is being referred to Technology Center AU 2841 for processing of the request for continued examination under 37 CFR 1.114 and for consideration of the concurrently filed information disclosure statement.

April M. Wise
Petitions Examiner
Office of Petitions

[1] *The request to apply the issue fee to the new Notice may be satisfied by completing and returning the new Part B – Fee(s) Transmittal Form (along with any balance due at the time of submission). Petitioner is advised that the Issue Fee Transmittal Form must be completed and timely submitted to avoid abandonment of the application.*

UNITED STATES PATENT AND TRADEMARK OFFICE

Commissioner for Patents
United States Patent and Trademark Office
P.O. Box 1450
Alexandria, VA 22313-1450
www.uspto.gov

TOWNSEND AND TOWNSEND AND CREW, LLP
TWO EMBARCADERO CENTER
EIGHTH FLOOR
SAN FRANCISCO, CA 94111-3834

COPY MAILED

AUG 21 2006

OFFICE OF PETITIONS

In re Application of	:	
Han, et al.	:	
Application No. 10/787,417	:	DECISION ON PETITION
Filed: February 27, 2004	:	TO WITHDRAW
Attorney Docket No. 022424-002900US	:	FROM RECORD
	:	

This is a decision on the Request to Withdraw as attorney or agent of record under 37 C.F.R. § 1.36(b), filed March 15, 2006.

The request is **DISMISSED** as moot.

A review of the file record indicates that the power of attorney to Townsend and Townsend and Crew, LLP has been revoked by the assignee of the patent application on March 7, 2006. Accordingly, the request to withdraw under 37 C.F.R. § 1.36(b) is moot.

All future communications from the Office will continue to be directed to the below-listed address until otherwise notified by applicant.

Telephone inquires concerning this decision should be directed to April Wise at 571-272-1642.

Amelia Au
Petitions Examiner
Office of Petitions

cc: Kendrew H. Colton
Fitch, Even, Tabin & Flannery
1801 K Street NW
Suite 401L
Washington, DC 20006

UNITED STATES PATENT AND TRADEMARK OFFICE

COMMISSIONER FOR PATENTS
UNITED STATES PATENT AND TRADEMARK OFFICE
P.O. BOX 1450
ALEXANDRIA, VA 22313-1450
www.uspto.gov

HARNESS, DICKEY & PIERCE, P.L.C.
P.O. BOX 828
BLOOMFIELD HILLS, MI 48303

COPY MAILED

JAN 26 2006

OFFICE OF PETITIONS

In re Application of :
Kenneth M. Sprouse, et al. :
Application No. 10/787,430 : ON PETITION
Filed: February 26, 2004 :
Attorney Docket No. 7784-000709 :

This is a decision on the petition to revive under 37 CFR 1.137(b), filed December 12, 2005, which is being treated as a petition under 37 CFR 1.181 to withdraw the holding of abandonment.

The application was held abandoned for a failure to respond to a Notice of Allowance and Fee(s) Due mailed June 2, 2005. Petitioner indicates that a response was timely filed on July 8, 2005, in the form of a Request for Continuing Examination (RCE). In support, petitioner provides a copy of the RCE including, inter alia, a copy of the postcard receipt dated July 8, 2005. It is noted that the RCE contains an incorrect application number. The postcard receipt includes the same incorrect application number. Nevertheless, a response that has an incorrect application number is handled in accordance with MPEP 508.03. If a paper having an incorrect application number contains sufficient information to identify the correct application and it was timely filed, the holding of abandonment will be withdrawn. In reviewing the papers submitted, it is concluded that the information contained thereon was sufficient to associate the papers with the correct application.

The RCE filed July 8, 2005 was filed within the period set for paying the issue fee and, therefore, is a proper filing under 37 CFR 1.114. Accordingly, the holding of abandonment is hereby withdrawn and the application restored to pending status. The RCE filed July 8, 2005 has been removed from the incorrect Image File Wrapper (IFW) and uploaded to the correct application identified above. Since the petition to revive is unnecessary, the petition fee will be refunded to counsel's deposit account.

Telephone inquires related to this decision should be directed to the undersigned at (571) 272-3204.

This application is being referred to Technology Center AU 3746 for appropriate action on the RCE filed July 8, 2005.

Sherry D. Brinkley
Petitions Examiner
Office of Petitions

UNITED STATES PATENT AND TRADEMARK OFFICE

Commissioner for Patents
United States Patent and Trademark Office
P.O. Box 1450
Alexandria, VA 22313-1450
www.uspto.gov

MAR - 7 2005

FINNEGAN, HENDERSON, FARABOW,
GARRETT & DUNNER LLP
901 NEW YORK AVENUE, NW
WASHINGTON DC 20001-4413

In re Application of	:
Roberto Cavazzuti et al	:
Serial No.: 10/787,441	: PETITION TO MAKE SPECIAL
Filed: February 27, 2004	:
Attorney Docket No.: 5725.0795-02	:

This is in response to the petition filed February 27, 2004, to make the above-identified application special under the provisions of 37 CFR 1.102(d) based on infringement.

Applicant has satisfied the provisions set forth in M.P.E.P. 708.02, II, relating to actual or potential infringement. Therefor the petition is **GRANTED**.

The application will be forwarded to the examiner for action on the merits commensurate with this decision.

Should there be any questions with regard to this letter please contact William R. Dixon, Jr. by letter addressed to the Director, Technology Center 1600, P.O. Box 1450, Alexandria, VA 22313-1450, or by telephone at 571-272-0519 or by facsimile transmission to the Office general facsimile number 571-273-8300.

William R. Dixon, Jr.
Special Program Examiner
Technology Center 1600

UNITED STATES PATENT AND TRADEMARK OFFICE

Commissioner for Patents
United States Patent and Trademark Office
P.O. Box 1450
Alexandria, VA 22313-1450
www.uspto.gov

MAIL

NOV 2 9 2007

DIRECTOR'S OFFICE
TECHNOLOGY CENTER 2600

Christopher C. Winslade
McAndrews, Held & Malloy
Suite 3400
500 W. Madison Street
Chicago IL 60661

In re application of :
KOENCK, STEVEN E., et al. :
Application Serial No. 10/787,443 :
Filed: February 26, 2004 :
For: **MODULAR, PORTABLE DATA PROCESSING TERMINAL FOR USE IN A COMMUNICATION NETWORK** :

DECISION
ON PETITION

This is a response to the petition under 37 CFR 1.59(b), filed November 7, 2007, to expunge information from the above identified application.

The decision on the petition will be held in abeyance until prosecution on the merits is closed, at which time the petition will be decided.

Petitioner requests that the information in six references, listed as Cite No. C27, C28, C29, C119, C120, and C431, submitted in an Information Disclosure Statement, filed June 5, 2006, be expunged from the record. Petitioner states that failure to obtain its return would cause irreparable harm to Applicant, and the information has not otherwise been made public. The petition fee set forth in 37 CFR 1.17(h) has been paid.

The decision on the petition is held in abeyance because prosecution on the merits is not closed. Accordingly, it is not appropriate to make a final determination of whether or not the material requested to be expunged is "material", with "materiality" being defined as any information which the examiner considers as being important to a determination of patentability of the claims. Thus, the decision on the petition to expunge must be held in abeyance at this time.

During prosecution on the merits, the examiner will determine whether or not the identified documents are considered to be "material". If the information is not considered by the examiner to be material, the information will be removed from the original file.

The documents in question will not be available to the public during prosecution.

Michael Hrabik
Quality Assurance Specialist
Technology Center 2600
Communications

UNITED STATES PATENT AND TRADEMARK OFFICE

Commissioner for Patents
United States Patent and Trademark Office
P.O. Box 1450
Alexandria, VA 22313-1450
www.uspto.gov

MAIL

NOV 26 2008

DIRECTOR OFFICE
TECHNOLOGY CENTER 2600

Christopher C. Winslade
McAndrews, Held & Malloy, Ltd.
500 W. Madison Street, 34th floor
Chicago, Il 60661

In re Application of KOENCK, STEVEN E., et al.
Appl. No.: 10/787,443
Filed: February 26, 2004
Attorney Docket No.: 14425US02
For: MODULAR, PORTABLE DATA PROCESSING TERMINAL FOR USE IN A COMMUNICATION NETWORK

DECISION ON PETITION
UNDER 37 C.F.R. §1.59

This is a decision on the request for reconsideration, filed December 10, 2007, of petition under 37 C.F.R. §1.59(b), filed November 7, 2007, to expunge information submitted on June 5, 2006.

The petition is GRANTED.

Petitioner requests that items C27, C28, C29, C119, C120 and C431 listed in the Information Disclosure Statement (IDS), filed on June 5, 2006 be expunged from the record. Petitioner states that the references were inadvertently submitted and states the failure to obtain their returned would cause irreparable harm to Qualcom (page 2 of the petition filed 11/07/07), and the information has not otherwise been made public. The petition fee set forth in 37 CFR 1.17(h) has been paid in the original petition filed November 7, 2007.

The expunged documents have been closed from public view and will not be returned to applicant.

It is noted that the instant application has been published on August 26, 2004. Thus, the aforementioned documents submitted on June 5, 2006 have already been made available to the public subject to copying by the public. Accordingly, the Office cannot guarantee the information being closed as a result of this decision was not previously accessed by the public.

Applicant is required to retain the expunged material(s) for the life of any patent which issues on the above-identified application.

Valencia Martin-Wallace, Director
Technology Center 2400

UNITED STATES PATENT AND TRADEMARK OFFICE

Commissioner for Patents
United States Patent and Trademark Office
P.O. Box 1450
Alexandria, VA 22313-1450
www.uspto.gov

ANTHONY EDW. J CAMPBELL
P.O. BOX 160370
AUSTIN, TX 78716

COPY MAILED

JAN 25 2006

OFFICE OF PETITIONS

In re Application of :
Phillip J. Pinon :
Application No. 10/787,453 : ON PETITION
Filed: February 26, 2004 :
Attorney Docket No. AMC3993 :

This is a decision on the petition under 37 CFR 1.137(b), filed October 24, 2005, to revive the above-identified application.

The petition is **GRANTED.**

The above-identified application became abandoned for failure to submit the Issue fee, publication fee and formal drawings in a timely manner in reply to the Notice of Allowance mailed July 18, 2005, which set a statutory period for reply of three (3) months. Accordingly, the above-identified application became abandoned on October 19, 2005.

The petition satisfies the conditions for revival pursuant to the provisions of 37 CFR 1.137(b) in that (1) the reply in the form of payment of the issue fee and formal drawings; (2) the petition and publication fees; and (3) the required statement of unintentional delay have been received. Accordingly, the issue fee is accepted as having been unintentionally delayed.

Telephone inquiries concerning this decision should be directed to the undersigned at (571) 272-3210.

This matter is being referred to the Publishing Division for further processing.

Irvin Dingle
Petitions Examiner
Office of Petitions

UNITED STATES PATENT AND TRADEMARK OFFICE

Commissioner for Patents
United States Patent and Trademark Office
P.O. Box 1450
Alexandria, VA 22313-1450
www.uspto.gov

ANTHONY EDW. J CAMPBELL
P.O. BOX 160370
AUSTIN, TX 78716

COPY MAILED

JAN 25 2006

OFFICE OF PETITIONS

In re Application of :
Phillip J. Pinon :
Application No. 10/787,453 : ON PETITION
Filed: February 26, 2004 :
Attorney Docket No. AMC3993 :

This is a decision on the petition under 37 CFR 1.137(b), filed October 24, 2005, to revive the above-identified application.

The petition is **GRANTED.**

The above-identified application became abandoned for failure to submit the Issue fee, publication fee and formal drawings in a timely manner in reply to the Notice of Allowance mailed July 18, 2005, which set a statutory period for reply of three (3) months. Accordingly, the above-identified application became abandoned on October 19, 2005.

The petition satisfies the conditions for revival pursuant to the provisions of 37 CFR 1.137(b) in that (1) the reply in the form of payment of the issue fee and formal drawings; (2) the petition and publication fees; and (3) the required statement of unintentional delay have been received. Accordingly, the issue fee is accepted as having been unintentionally delayed.

Telephone inquiries concerning this decision should be directed to the undersigned at (571) 272-3210.

This matter is being referred to the Publishing Division for further processing.

Irvin Dingle
Petitions Examiner
Office of Petitions

UNITED STATES PATENT AND TRADEMARK OFFICE

Commissioner for Patents
United States Patent and Trademark Office
P.O. Box 1450
Alexandria, VA 22313-1450
www.uspto.gov

FOLEY HOAG, LLP
Patent Group
World Trade Center West
155 Seaport Blvd
Boston, MA 02110

MAILED

JUN 2 5 2005

Technology Center 2100

In re Application of:
Sherwin HAN
Application No. 10/787,472
Filed: February 26, 2004
For: INTERNET ORGANIZER

DECISION ON REQUEST TO WITHDRAW AS ATTORNEY OR AGENT

This is a decision on the Request to Withdraw from Representation filed June 02, 2005.

A grantable request to withdraw as attorney of record should indicate thereon the present mailing addresses of the attorney(s) who is/are withdrawing from the record and of the applicant. The request for withdrawal must be signed by every attorney seeking to withdraw or contain a clear indication that one attorney is signing on behalf of another/others. A request to withdraw will not be approved unless at least 30 (thirty) days would remain between the date of approval and the later of the expiration date of a time to file a response or the expiration date of the maximum time period which can be extended under 37 C.F.R. § 1.136(a). The effective date of withdrawal being the date of decision and not the date of request. See M.P.E.P. § 402.06. 37 C.F.R. § 1.36 **further requires that the applicant or patent owner be notified of the withdrawal of the attorney or agent.**

There is no indication that Applicant has been notified of the request for withdrawal. Accordingly, the request is **DENIED.**

All future communications from the Office will continue to be directed to the above-listed address until otherwise notified by applicant. This correspondence address is provided by the withdrawn attorney(s). Applicant is reminded of the obligation to promptly notify the Patent and Trademark Office (Office) of any change in correspondence address to ensure receipt of all communications from the Office.

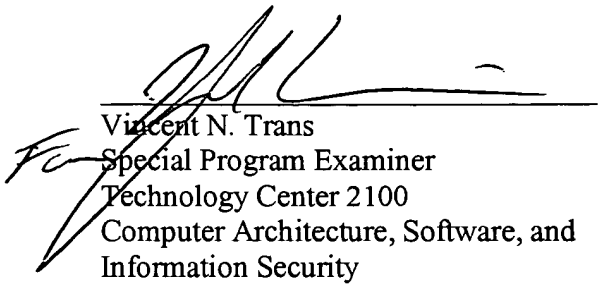

Vincent N. Trans
Special Program Examiner
Technology Center 2100
Computer Architecture, Software, and
Information Security
571-272-3613

UNITED STATES PATENT AND TRADEMARK OFFICE

Commissioner for Patents
United States Patent and Trademark Office
P.O. Box 1450
Alexandria, VA 22313-1450
www.uspto.gov

FOLEY HOAG, LLP
PATENT GROUP, WORLD TRADE CENTER WEST
155 SEAPORT BLVD
BOSTON, MA 02110

COPY MAILED

JUL 27 2006

OFFICE OF PETITIONS

In re Application of :
Sherwin Han :
Application No. 10/787,472 :
Filed: February 26, 2004 :
Attorney Docket No. ABK-002.02 :

DECISION ON REQUEST
TO WITHDRAW FROM
RECORD

This is a decision on the Request to Withdraw as attorney or agent under 37 C.F.R. § 1.36(b) or 37 CFR § 10.40 filed on August 10, 2005.

The request is **APPROVED**.

A grantable request to withdraw as attorney/agent of record must be signed by every attorney/agent seeking to withdraw or contain a clear indication that one attorney is signing on behalf of another/others. A request to withdraw will not be approved unless at least 30 (thirty) days would remain between the date of approval and the later of the expiration date of a time to file a response or the expiration date of the maximum time period which can be extended under 37 CFR § 1.136(a).

The request was signed by Joseph Born, on behalf of all the attorneys/agents associated with Customer Number 25181.

Joseph Born and all the attorneys/agents associated with Customer Number 25181 have been withdrawn. Therefore, applicant is reminded that there are no attorneys/agents of record at this time.

The request to change the correspondence of record is acceptable, since it is the address of the sole inventor. All future communications from the Office will be directed to the sole inventor at the address below until otherwise properly notified by the applicant.

Telephone inquiries concerning this decision should be directed to Andrea Smith at (571) 272-3226.

Andrea Smith
Petitions Examiner
Office of Petitions

cc: Sherwin Han, President
Abstract Productions
21 Linda Avenue
Portsmouth, RI 02871

UNITED STATES PATENT AND TRADEMARK OFFICE

UNITED STATES DEPARTMENT OF COMMERCE
United States Patent and Trademark Office
Address: COMMISSIONER FOR PATENTS
P.O. Box 1450
Alexandria, Virginia 22313-1450
www.uspto.gov

APPLICATION NUMBER	FILING OR 371 (c) DATE	FIRST NAMED APPLICANT	ATTY. DOCKET NO./TITLE
10/787,472	02/26/2004	Sherwin Han	ABK-002.02

CONFIRMATION NO. 6989

OC000000019789821

25181
FOLEY HOAG, LLP
PATENT GROUP, WORLD TRADE CENTER WEST
155 SEAPORT BLVD
BOSTON, MA 02110

Date Mailed: 07/27/2006

NOTICE REGARDING CHANGE OF POWER OF ATTORNEY

This is in response to the Power of Attorney filed 08/10/2005.

- The withdrawal as attorney in this application has been accepted. Future correspondence will be mailed to the new address of record. 37 CFR 1.33.

ANDREA M SMITH
OP (571) 272-3226

FORMER ATTORNEY/AGENT COPY

UNITED STATES PATENT AND TRADEMARK OFFICE

Commissioner for Patents
United States Patent and Trademark Office
P.O. Box 1450
Alexandria, VA 22313-1450
www.uspto.gov

MBHB/TRADING TECHNOLOGIES
300 SOUTH WACKER DRIVE
SUITE 3200
CHICAGO IL 60606

COPY MAILED
FEB 08 2010

In re Application of :
TRIPLETT, MARK W. :
Application No. 10/787,481 : ON APPLICATION FOR
Filed: February 26, 2004 : PATENT TERM ADJUSTMENT
Atty. Docket No. 04-111 :

This is in response to the REQUEST FOR RECONSIDERATION OF PATENT TERM ADJUSTMENT filed December 10, 2009. Applicants submit that the correct patent term adjustment to be indicated on the patent is 1,486 days, not 1,220 days as calculated by the Office as of the mailing of the initial determination of patent term adjustment. Applicants seek this correction solely on the basis that the Office will take in excess of three years to issue this patent.

As the instant application for patent term adjustment requests reconsideration of the patent term adjustment as it relates to the Office's failure to issue the patent within three years of the filing date, the application for patent term adjustment under 37 CFR 1.705(b) is **DISMISSED as PREMATURE**.

Knowledge of the actual date the patent issues is required to calculate the amount, if any, of additional patent term patentees are entitled to for Office failure to issue the patent within three years. See 37 CFR 1.702(b). (This is true even where a request for continued examination (RCE) was filed). The computer will not undertake the § 1.702(b) calculation until the actual date of issuance of the patent has been determined. Likewise, the computer will not calculate any further Office delay under 37 CFR 1.702(a)(4) or applicant delay under 37 CFR 1.704(c)(10) until the actual date of issuance of the patent has been determined. As such, the Office cannot make a

determination on the correctness of the patent term adjustment until the patent has issued.

Requesting reconsideration of the patent term adjustment to be indicated on the patent under 37 CFR 1.705(b) based on the initial determination of patent term adjustment and a projected issuance date of the patent (or even the filing date of the request for continued examination) is premature. Accordingly, it is appropriate to dismiss such a request as premature.

Rather than file an application for patent term adjustment under 37 CFR 1.705(b) contesting the 37 CFR 1.702(b) calculation at the time of the mailing of the notice of allowance, applicants are advised that they may wait until the time of the issuance of the patent and file a request for reconsideration of the patent term adjustment pursuant to 37 CFR 1.705(d). As the USPTO does not calculate the amount of time earned pursuant to 37 CFR 1.702(b) until the time of the issuance of the patent, the Office will consider any request for reconsideration of the patent term adjustment due to an error in the calculation of 37 CFR 1.702(b) to be timely if the request for reconsideration is filed within two months of the issuance of the patent. However, as to all other bases for contesting the initial determination of patent term adjustment received with the notice of allowance, applicants must timely file an application for patent term adjustment prior to the payment of the issue fee.[1]

The Office acknowledges submission of the $200.00 fee set forth in 37 CFR 1.18(e) for consideration of the application for patent term adjustment under 37 CFR 1.705(b).

Any request for reconsideration of the patent term adjustment indicated on the patent must be timely filed within two months

---

[1] For example, if applicants dispute both the calculation of patent term adjustment under 37 CFR 1.702(a)(1) for Office failure to mail a first Office action or notice of allowance not later than fourteen months after the date on which the application was filed, and under 37 CFR 1.702(b) for Office failure to issue a patent within three years of the actual filing date of the application, then applicants must still timely file an application for patent term adjustment prior to the payment of the issue fee to contest the calculation of Office delay in issuing a first Office action or notice of allowance. See 37 CFR 1.705(b) and 35 U.S.C. 154(b)(3)(B). A dispute as to the calculation of the § 1.702(a)(1) period raised on request for reconsideration of patent term adjustment under 37 CFR 1.705(d) will be dismissed as untimely filed.

after issuance pursuant to 37 CFR 1.705(d) and must include payment of the required fee under 37 CFR 1.18(e).

The Office of Data Management has been advised of this decision. This application is being referred to the Office of Data Management for issuance of the patent.

Telephone inquiries specific to this decision should be directed to the undersigned at (571) 272-3211.

Christina Tartera Donnell

Christina Tartera Donnell
Senior Petitions Attorney
Office of Petitions

UNITED STATES PATENT AND TRADEMARK OFFICE

Commissioner for Patents
United States Patent and Trademark Office
P.O. Box 1450
Alexandria, VA 22313-1450
www.uspto.gov

MBHB/TRADING TECHNOLOGIES
300 SOUTH WACKER DRIVE
SUITE 3200
CHICAGO IL 60606

COPY MAILED
FEB 26 2010

In re Application of	:	
Mark W. Triplett	:	
Application No. 10/787,481	:	DECISION GRANTING PETITION
Filed: February 26, 2004	:	UNDER 37 CFR 1.313(c)(2)
Attorney Docket No. 04-111	:	

This is a decision on the petition under 37 CFR 1.313(c)(2), filed February 25, 2010, to withdraw the above-identified application from issue after payment of the issue fee.

The petition is **GRANTED**.

The above-identified application is withdrawn from issue for consideration of a submission under 37 CFR 1.114 (request for continued examination). *See* 37 CFR 1.313(c)(2).

Petitioner is advised that the issue fee paid on December 10, 2009 cannot be refunded. If, however, this application is again allowed, petitioner may request that it be applied towards the issue fee required by the new Notice of Allowance.[1]

Telephone inquiries should be directed to the undersigned at (571) 272-3208.

This application is being referred to Technology Center AU 3691 for processing of the request for continued examination under 37 CFR 1.114 and for consideration of the concurrently filed IDS.

/Karen Creasy/
Karen Creasy
Petitions Examiner
Office of Petitions

[1] *The request to apply the issue fee to the new Notice may be satisfied by completing and returning the new Part B – Fee(s) Transmittal Form (along with any balance due at the time of submission). Petitioner is advised that the Issue Fee Transmittal Form must be completed and timely submitted to avoid abandonment of the application.*

UNITED STATES PATENT AND TRADEMARK OFFICE

COMMISSIONER FOR PATENTS
UNITED STATES PATENT AND TRADEMARK OFFICE
P.O. BOX 1450
ALEXANDRIA, VA 22313-1450
www.uspto.gov

TOWNSEND AND TOWNSEND AND CREW, LLP
TWO EMBARCADERO CENTER
EIGHTH FLOOR
SAN FRANCISCO, CA 94111-3834

MAILED

JUL 0 5 2005

Technology Center 2100

In re Application of Yoichi Taguchi	:	
Application No.: 10/787,501	:	DECISION ON PETITION
Filing Date: February 25, 2004	:	FOR ACCELERATED
For: LOGICAL UNIT SECURITY FOR CLUSTERED STORAGE AREA NETWORKS	:	EXAMINATION UNDER M.P.E.P. §708.02(VIII)

This is a decision on the petition filed June 8, 2005 under 37 CFR §1.102(d) and M.P.E.P. §708.02(VIII): Accelerated Examination, to make the above-identified application special.

The petition is **GRANTED**.

M.P.E.P. §708.02, Section VIII, which sets out the prerequisites for a grantable petition for Accelerated Examination under 37 CFR §1.102(d), states in relevant part:

> A new application (one which has not received any examination by the examiner) may be granted special status provided that applicant (and this term includes applicant's attorney or agent) complies with each of the following items:
>
> (A) Submits a petition to make special accompanied by the fee set forth in 37 CFR 1.17(h);
>
> (B) Presents all claims directed to a single invention, or if the Office determines that all the claims presented are not obviously directed to a single invention, will make an election without traverse as a prerequisite to the grant of special status. The election may be made by applicant at the time of filing the petition for special status. Should applicant fail to include an election with the original papers or petition and the Office determines that a requirement should be made, the established telephone restriction practice will be followed. If otherwise proper, examination on the merits will proceed on claims drawn to the elected invention. If applicant refuses to make an election without traverse, the application will not be further examined at that time. The petition will be denied on the ground that the claims are not directed to a single invention, and the application will await action in its regular turn. Divisional applications directed to the nonelected inventions will not automatically be given special status based on papers filed with the petition in the parent application. Each such application must meet on its own all requirements for the new special status;

(C) Submits a statement(s) that a pre-examination search was made, listing the field of search by class and subclass, publication, Chemical Abstracts, foreign patents, etc. >The pre-examination search must be directed to the invention as claimed in the application for which special status is requested.< A search made by a foreign patent office satisfies this requirement >if the claims in the corresponding foreign application are of the same or similar scope to the claims in the U.S. application for which special status is requested<;

(D) Submits one copy each of the references deemed most closely related to the subject matter encompassed by the claims if said references are not already of record; and

(E) Submits a detailed discussion of the references, which discussion points out, with the particularity required by 37 CFR 1.111 (b) and (c), how the claimed subject matter is patentable over the references.

Because the petition filed June 8, 2005 meets the criteria set forth above, the petition to make special is **GRANTED**.

The application file is being forwarded to the Examiner for accelerated examination in accordance with M.P.E.P. §708.02, Section VIII. If the application is subsequently allowed, it will be given priority for printing. See M.P.E.P. §1309.

Pinchus M. Laufer
Special Programs Examiner
Technology Center 2100
Computer Architecture, Software, and Information Security
571-272-3599

UNITED STATES PATENT AND TRADEMARK OFFICE

COMMISSIONER FOR PATENTS
UNITED STATES PATENT AND TRADEMARK OFFICE
P.O. BOX 1450
ALEXANDRIA, VA 22313-1450
www.uspto.gov

MAIL

JUL 19 2004

DIRECTOR OFFICE
TECHNOLOGY CENTER 2600

STEVENS DAVIS MILLER & MOSHER, LLP
1615 L STREET, NW
SUITE 850
WASHINGTON DC 20036

In re Application of :
Timothy G. Beard, et al. :
Application No. 10/787,537 : DECISION ON PETITION
Filed: February 27, 2004 : TO MAKE SPECIAL
For: EXTENDED DYNAMIC RESOURCE :
ALLOCATION IN PACKET DATA TRANSFER :

This is a decision on the petition filed June 4, 2004 under Manual of Patent Examination Procedure §708.02, VIII requesting accelerated examination.

The petition under Manual of Patent Examination Procedure §708.02, VIII, must:
(1) be filed prior to receiving any examination by the examiner,
(2) be accompanied by the required fee- $130,
(3) the claims should be directed to a single invention (if it is determined that the claims pertain to more than one invention, then applicant will have to make an election without traverse or forfeit accelerated examination status),
(4) state that a pre-examination search was made, and fully discuss the search method employed, such as classes and subclasses searched, publications, Chemical abstracts, patents, etc. A search made by a foreign patent office satisfies this requirement,
(5) be accompanied by a copy of each of the references most closely related to the subject matter encompassed by the claims if said references are not already of record,
(6) fully discuss the references, pointing out with the particularity required by 37 C.F.R. §1.111 (b) and (c), how the claimed subject matter is patentable over the references.

The petitioner meets all the above-listed requirements. Accordingly, the petition is **GRANTED**.

The application will retain its special status throughout its entire prosecution, including any appeal to the Board of Patent Appeals and Interferences, subject only to diligent prosecution by the applicant. The application file is being forwarded to the examiner for appropriate action in due course.

Krista Zele
Special Program Examiner
Technology Center 2600
Communications

UNITED STATES PATENT AND TRADEMARK OFFICE

COMMISSIONER FOR PATENTS
UNITED STATES PATENT AND TRADEMARK OFFICE
P.O. BOX 1450
ALEXANDRIA, VA 22313-1450
www.uspto.gov

MAIL

JUL 19 2004

DIRECTOR OFFICE
TECHNOLOGY CENTER 2600

STEVENS DAVIS MILLER & MOSHER, LLP
1615 L STREET, NW
SUITE 850
WASHINGTON DC 20036

In re Application of :
Timothy G. Beard, et al. :
Application No. 10/787,538 : DECISION ON PETITION
Filed: February 27, 2004 : TO MAKE SPECIAL
For: EXTENDED DYNAMIC RESOURCE :
ALLOCATION IN PACKET DATA TRANSFER :

This is a decision on the petition filed June 4, 2004 under Manual of Patent Examination Procedure §708.02, VIII requesting accelerated examination.

The petition under Manual of Patent Examination Procedure §708.02, VIII, must:
(1) be filed prior to receiving any examination by the examiner,
(2) be accompanied by the required fee- $130,
(3) the claims should be directed to a single invention (if it is determined that the claims pertain to more than one invention, then applicant will have to make an election without traverse or forfeit accelerated examination status),
(4) state that a pre-examination search was made, and fully discuss the search method employed, such as classes and subclasses searched, publications, Chemical abstracts, patents, etc. A search made by a foreign patent office satisfies this requirement,
(5) be accompanied by a copy of each of the references most closely related to the subject matter encompassed by the claims if said references are not already of record,
(6) fully discuss the references, pointing out with the particularity required by 37 C.F.R. §1.111 (b) and (c), how the claimed subject matter is patentable over the references.

The petitioner meets all the above-listed requirements. Accordingly, the petition is **GRANTED**.

The application will retain its special status throughout its entire prosecution, including any appeal to the Board of Patent Appeals and Interferences, subject only to diligent prosecution by the applicant. The application file is being forwarded to the examiner for appropriate action in due course.

Krista Zele
Special Program Examiner
Technology Center 2600
Communications

UNITED STATES PATENT AND TRADEMARK OFFICE

Commissioner for Patents
United States Patent and Trademark Office
P.O. Box 1450
Alexandria, VA 22313-1450
www.uspto.gov

STEVENS DAVIS MILLER & MOSHER
1615 L STREET NW, SUITE 850
WASHINGTON, DC 20036

COPY MAILED

JUN 2 4 2005

OFFICE OF PETITIONS

ON PETITION

In re Application of :
Timothy Giles Beard et al :
Application No. 10/787,538 :
Filed: February 27, 2004 :
Attorney Docket No. L9289.04113 :

This is a decision on the petition under 37 CFR 1.313 (b), filed June 22, 2005, which is being treated under 37 CFR 1.313(c)(2), to withdraw the above-identified application from issue after payment of the issue fee.

The petition is **GRANTED**.

The above-identified application is withdrawn from issue for consideration of a submission under 37 CFR 1.114 (request for continued examination). See 37 CFR 1.313(c)(2).

Petitioner is advised that the issue fee paid on May 19, 2005 in the above-identified application cannot be refunded. If, however, the above-identified application is again allowed, petitioner may request that it be applied towards the issue fee required by the new Notice of Allowance.[1]

Telephone inquiries should be directed to Wan Laymon at (571) 272-3220.

This matter is being referred to Technology Center AU 2663 for processing of the request for continued examination under 37 CFR 1.114 and for consideration of the concurrently filed IDS.

Wan Laymon
Petitions Examiner
Office of Petitions
Office of the Deputy Commissioner
for Patent Examination Policy

[1] The request to apply the issue fee to the new Notice may be satisfied by completing and returning the new Issue Fee Transmittal Form PTOL-85(b), which includes the following language thereon: "Commissioner for Patents is requested to apply the Issue Fee and Publication Fee (if any) or re-apply any previously paid issue fee to the application identified above." Petitioner is advised that, whether a fee is indicated as being due or not, the Issue Fee Transmittal Form **must** be completed and timely submitted to avoid abandonment. Note the language in bold text on the first page of the Notice of Allowance and Fee(s) Due (PTOL-85).

UNITED STATES PATENT AND TRADEMARK OFFICE

Commissioner for Patents
United States Patent and Trademark Office
P.O. Box 1450
Alexandria, VA 22313-1450
www.uspto.gov

SCHWEGMAN, LUNDBERG & WOESSNER, P.A.
P.O. BOX 2938
MINNEAPOLIS, MN 55402

COPY MAILED

NOV 29 2007

OFFICE OF PETITIONS

In re Application of
ANGEL, Mark et al.
Application No. 10/787,548
Filed: February 26, 2004
Attorney Docket No. **1546.023US1**

DECISION ON PETITION
TO WITHDRAW
FROM RECORD

This is a decision on the Request to Withdraw as attorney or agent of record under 37 C.F.R. § 1.36(b), filed October 23, 2007.

The request is **APPROVED**.

A grantable request to withdraw as attorney/agent of record must be signed by every attorney/agent seeking to withdraw or contain a clear indication that one attorney is signing on behalf of another/others. A request to withdraw will not be approved unless at least 30 (thirty) days would remain between the date of approval and the later of the expiration date of a time to file a response or the expiration date of the maximum time period which can be extended under 37 C.F.R. § 1.136(a).

The request was signed by Suneel Arora on behalf of all attorneys of record who are associated with customer No. 21186. All attorneys/agents associated have been withdrawn. Applicant is reminded that there is no attorney of record at this time.

The request to change the correspondence of record is not acceptable as the requested correspondence address is not that of: (1) the first named signing inventor; or (2) an intervening assignee of the entire interest under 37 C.F.R 3.71. All future communications from the Office will be directed to the first named signing inventor.

There is an outstanding Office action mailed October 09, 2007 that requires a reply from the applicant.

Telephone inquiries concerning this decision should be directed to the undersigned at 571-272-4231.

Michelle R. Eason
Paralegal Specialist
Office of Petitions

cc: **MARK ANGEL**
3399 SODA CANYON
NAPA, CA 94559

cc: **DOREEN J. GRIDLEY**
ICE MILLER LLP
ONE AMERICAN SQUARE , SUITE 3100
INDIANAPOLIS, IN 46282-0200

UNITED STATES PATENT AND TRADEMARK OFFICE

COMMISSIONER FOR PATENTS
UNITED STATES PATENT AND TRADEMARK OFFICE
P.O. BOX 1450
ALEXANDRIA, VA 22313-1450
www.uspto.gov

Paper No.

Lawrence J. Shurupoff
Sunbeam Products, Inc.
2381 Executive Center Drive
Boca Raton FL 33431

COPY MAILED

NOV 15 2007

OFFICE OF PETITIONS

In re Application of :
Sumser et al. : DECISION ON PETITION
Application No. 10/787,557 :
Filed: February 26, 2004 :
Atty Docket No. Mrcofe-2-4286 :

This is a decision on the PETITION TO WITHDRAW HOLDING OF ABANDONMENT UNDER 37 CFR 1.181(a) filed July 2, 2007.

The above-identified application became abandoned for failure to file a reply to the final Office action mailed December 8, 2006. This Office action set a shortened statutory period for reply of three (3) months, with extensions of time obtainable under § 1.136(a). No reply considered timely filed and no extension of time considered obtained, the application became abandoned effective March 9, 2007. A courtesy Notice of Abandonment was mailed on June 14, 2007.

Applicants contend that on March 8, 2007, a Request for Continued Examination (RCE) was faxed to the examiner at the examiner's fax number. In support thereof, applicants submit a copy of the facsimile cover page, noting that twelve pages were received on March 8, 2007. (Applicants acknowledge that no response was sent to the Official fax number of 571-273-8300).

37 CFR 1.8(b)

> In the event that correspondence is considered timely filed by being mailed or transmitted in accordance with paragraph

(a) of this section, but not received in the U.S. Patent and Trademark Office after a reasonable amount of time has elapsed from the time of mailing or transmitting of the correspondence, or after the application is held to be abandoned, or after the proceeding is dismissed, terminated, or decided with prejudice, the correspondence will be considered timely if the party who forwarded such correspondence:

(1) Informs the Office of the previous mailing or transmission of the correspondence promptly after becoming aware that the Office has no evidence of receipt of the correspondence;

(2) Supplies an additional copy of the previously mailed or transmitted correspondence and certificate; and

(3) Includes a statement which attests on a personal knowledge basis or to the satisfaction of the Director to the previous timely mailing or transmission. If the correspondence was sent by facsimile transmission, a copy of the sending unit's report confirming transmission may be used to support this statement.

Requirement (2) above for entitlement to the benefit of §1.8 has not been met. The copy of the response as petitioner maintains it was faxed to the Office does not include a certificate of transmission. As such, the response as it was not filed in compliance with paragraph (a) cannot be considered timely filed pursuant to 37 CFR 1.8(b).

In view thereof, the petition under § 1.181 is **DISMISSED**.

Any request for reconsideration must be submitted within **TWO (2) MONTHS** from the mail date of this decision. Extensions of time under 37 C.F.R. §1.136(a) are not permitted. See 1.181(f).

Alternatively, applicants are not precluded from seeking revival under the provisions of 37 CFR 1.137. Such a request should include a cover letter entitled "Petition under 37 C.F.R. § 1.137(a)" or "Petition under 37 C.F.R. § 1.137(b)," as appropriate. Any general questions regarding the filing of a petition to revive may be directed to the Office of Petitions Helpdesk at 571-272-3282 (M-F, 8:30am - 5:00 pm (EST).

Further correspondence with respect to this decision should be addressed as follows:

By mail:	Mail Stop Petition Commissioner for Patents P.O. Box 1450 Alexandria, VA 22313-1450
By fax:	(571) 273-8300 ATTN: Office of Petitions
By hand:	Customer Service Window Randolph Building 401 Dulany Street Alexandria, VA 22314

Telephone inquiries specific to this decision should be directed to the undersigned at (571) 272-3219.

Nancy Johnson
Senior Petitions Attorney
Office of Petitions

UNITED STATES PATENT AND TRADEMARK OFFICE

COMMISSIONER FOR PATENTS
UNITED STATES PATENT AND TRADEMARK OFFICE
P.O. BOX 1450
ALEXANDRIA, VA 22313-1450
www.uspto.gov

Paper No.

Sunbeam Products, Inc.
2381 Executive Center Drive
Boca Raton FL 33431

MAILED

FEB 02 2009

OFFICE OF PETITIONS

In re Application of :
Sumser et al. : DECISION ON PETITION
Application No. 10/787,557 :
Filed: February 26, 2004 :
Atty Docket No. Mrcofe-2-4286 :

This is a decision on the REQUEST FOR RECONSIDERATION filed December 7, 2007. This renewed petition was recently forwarded to the undersigned for consideration.

The above-identified application became abandoned effective March 9, 2007 for failure to file a reply to the final Office action mailed December 8, 2006. A courtesy Notice of Abandonment was mailed on June 14, 2007.

By decision mailed November 15, 2007, the initial PETITION TO WITHDRAW HOLDING OF ABANDONMENT UNDER 37 CFR 1.181(a) filed July 2, 2007 was dismissed. Applicant contended that on March 8, 2007, a Request for Continued Examination (RCE) was faxed to the examiner at the examiner's fax number. In support thereof, applicant submitted a copy of the facsimile cover page, noting that twelve pages were received in the USPTO on March 8, 2007. (Applicant acknowledges that no response was sent to the Official fax number of 571-273-8300). The dismissal decision concluded that applicant had not, as required by 37 CFR 1.8(b)(2), submitted an additional copy of the previously mailed or transmitted correspondence and certificate. The undersigned concluded that the copy of the response as applicant maintains it was faxed to the Office did not include a certificate of transmission.

On instant request for reconsideration, applicant in effect requests that the undersigned re-review the copy of the response. A closer review of the certificate reveals that the RCE transmittal form (Form PTO/SB/30 (5/2000)) did include a certificate of facsimile transmission. The certificate, although a USPTO form, confusingly referred to Express Mail deposit and facsimile transmission. (The form has been updated most recently 12/2008, and an EFS version of the form has been added for direct filing and processing by EFS-web).

Having reconsidered the evidence, it is concluded that applicant has made a satisfactory showing, pursuant to 37 CFR 1.8(b), that the RCE and submission should be considered timely filed on Thursday, March 8, 2007.

Notwithstanding the certificate on the PTO form, the suggested format for certificates of transmission, as set forth in MPEP 512 is as follows:

> I hereby certify that this correspondence is being facsimile transmitted to the United States Patent and Trademark Office, Fax No. (___)_____-_____ on _____. (Date)
>
> Typed or printed name of person signing this certificate:
>
> _____
>
> Signature: _____
>
> Registration Number: _____

It is important to include the facsimile number to assure compliance with 37 CFR 1.8, including directing correspondence to the proper facsimile number. Applicant is reminded that the Office's Centralized Delivery and Facsimile Transmission Policy provides that unless an exception applies, correspondence sent by facsimile is to be directed to the centralized facsimile number at 571-273-8300. Further, applicant's attention is directed to a proposed rule, *Changes to Practice for Documents Submitted to the United States Patent and Trademark Office, Notice of proposed rulemaking*, 73 FR 45662 (August 6, 2008), which may make ineffective facsimile transmissions, such as the one utilized here, received in the Office but directed to facsimile numbers other than the one to which that type of correspondence should be sent.

In view thereof, the Notice of Abandonment mailed June 14, 2007 and the holding of abandonment are hereby **withdrawn**.

The petition under § 1.181 is **GRANTED**.

No fee is required on petition under § 1.181.

Technology Center AU 1761 has been advised of this decision. The application is, thereby, forwarded for the Technology Center's technical support staff to withdraw the holding of abandonment and for forwarding to the examiner for consideration of the RCE and submission previously filed on March 8, 2007 and resubmitted on petition filed July 2, 2007.

Telephone inquiries specific to this matter should be directed to the undersigned at (571) 272-3219.

Nancy Johnson
Senior Petitions Attorney
Office of Petitions

SPE RESPONSE FOR CERTIFICATE OF CORRECTION

Paper No.: _____

DATE : 07-16-08

TO SPE OF : ART UNIT 2861

SUBJECT : Request for Certificate of Correction for Appl. No.: **10/787573** Patent No.: **7240997**

Please respond to this request for a certificate of correction within 7 days.

Please review the requested changes/corrections as shown in the **COCIN** document(s) in the IFW application image. No new matter should be introduced, nor should the scope or meaning of the claims be changed.

Please complete the response (see below) and forward the completed response to scanning using document code **COCX**.

Angela Green
Certificates of Correction Branch
703.308.9380 ext. 123

Thank You For Your Assistance

The request for issuing the above-identified correction(s) is hereby:
Note your decision on the appropriate box.

- ☒ **Approved** — **All** changes apply.
- ☐ **Approved in Part** — Specify below which changes **do not** apply.
- ☐ **Denied** — State the reasons for denial below.

Comments: _____

MATTHEW LUU — **SPE**

2861 — **Art Unit**

OK TO ENTER: /BG/

PTO/SB/44 (04-05)
Approved for use through 04/30/2007. OMB 0651-0033
U.S. Patent and Trademark Office; U.S. DEPARTMENT OF COMMERCE
Under the Paperwork Reduction Act of 1995, no persons are required to respond to a collection of information unless it displays a valid OMB control number.
(Also Form PTO-1050)

UNITED STATES PATENT AND TRADEMARK OFFICE
CERTIFICATE OF CORRECTION

PATENT NO : 7,240,997

APPLICATION NO. : 10/787,573

ISSUE DATE : Jul. 10, 2007

INVENTOR(S) : Kevin Bruce, et al.

It is certified that an error appears or errors appear in the above-identified patent and that said Letters Patent is hereby corrected as shown below:

On the face page, in field (57), under "Abstract", in column 2, line 2, delete "metallayer" and insert - - metal layer - -, therefor.

In column 9, line 15, in Claim 1, delete "second-metal layer" and insert - - second-metal-layer - -, therefor.

In column 9, line 49, in Claim 9, after "comprises a" delete "first".

In column 9, line 52, in Claim 10, after "wherein the" delete "first".

In column 12, line 13, in Claim 36, after "metal layer" delete "," and insert - - ; - -, therefor.

In column 12, line 14, in Claim 36, after "barrier layer" delete "," and insert - - ; - -, therefor.

MAILING ADDRESS OF SENDER (Please do not use customer number below):

HEWLETT-PACKARD COMPANY
Intellectual Property Administration
P. O. Box 272400
Fort Collins, Colorado 80527-2400

This collection of information is required by 37 CFR 1.322, and 1.323, and 1.324. The information is required to obtain or retain a benefit by the public which is to file (and by the USPTO to process) an application. Confidentiality is governed by 35 U.S.C 122 and 37 CFR 1.14. This collection is estimated to take 1.0 hour to complete, including gathering, preparing, and submitting the completed application form to the USPTO. Time will vary depending upon the individual case. Any comments on the amount of time you require to complete this form and/or suggestions for reducing this burden, should be sent to the Chief Information Officer, U.S. Patent and Trademark Office, U.S. Department of Commerce, P.O. Box 1450, Alexandria, VA 22313-1450. DO NOT SEND FEES OR COMPLETED FORMS TO THIS ADDRESS. **SEND TO: Attention Certificate of Corrections Branch, Commissioner for Patent, P.O. Box 1450, Alexandria, VA 22313-1450.**

If you need assistance in completing the form, call 1-800-PTO-9199 and select option 2.

UNITED STATES PATENT AND TRADEMARK OFFICE

Commissioner for Patents
United States Patent and Trademark Office
P.O. Box 1450
Alexandria, VA 22313-1450
www.uspto.gov

Robert Tendler
65 Atlantic Avenue
Boston MA 02110

COPY MAILED

AUG 0 8 2006

OFFICE OF PETITIONS

In re Application of :
Perkins et al. : DECISION GRANTING PETITION
Application No. 10/787,577 :
Filed: February 26, 2004 :
Attorney Docket No. 20030108 :

This is a decision on the petition under 37 CFR 1.137(b), filed April 5, 2006, to revive the above-identified application.

This application became abandoned for failure to pay the issue and publication fees as required by the Notice of Allowance and Fee(s) Due mailed on November 18, 2005, which set a three (3) month statutory period for reply. A Notice of Abandonment was mailed on March 28, 2006.

Petitioner has met the requirements under 37 CFR 1.137(b). Accordingly, the petition is **GRANTED**

This application is being forwarded to the Office of Patent Publication for processing into a patent.

Telephone inquiries concerning the issuance of the application into a patent should be directed to the Office of Patent Publication, Customer Service at (571) 272-4200.

Telephone inquiries specifically concerning this decision should be directed to the undersigned at (571) 272-3211.

Christina L. Donnell

Christina Tartera Donnell
Senior Petitions Attorney
Office of Petitions

UNITED STATES PATENT AND TRADEMARK OFFICE

Commissioner for Patents
United States Patent and Trademark Office
P.O. Box 1450
Alexandria, VA 22313-1450
www.uspto.gov

In re Patent No. 7004435
Issue Date: February 28,2006
Application No. 10787584
Filed: February 27,2004
Attorney Docket No. 1517-1040

:
:DECISION GRANTING PETITION
:UNDER 37 CFR 1.378(c)
:

This is a decision on the electronic petition, filed April 12,2010 ,under 37 CFR 1.378(c) to accept the unintentionally delayed payment of the 3.5 year maintenance fee for the above-identified patent.

The petition is **GRANTED**.

The maintenance fee is accepted, and the above-identified patent reinstated as of April 12,2010 . This decision also constitutes notice that the fee has been accepted. An electronic copy of the petition and this decision has been created as an entry in the Image File Wrapper. Nevertheless, petitioner should print and retain an independent copy.

Telephone inquiries related to this electronic decision should be directed to the Electronic Business Center at 1-866-217-9197.

PTO/SB/66 (03-09)
Approved for use through 03/31/2012. OMB 0651-0016
U.S. Patent and Trademark Office: U.S. DEPARTMENT OF COMMERCE
Under the Paperwork Reduction Act of 1995, no persons are required to respond to a collection of information unless it displays valid OMB control number.

PETITION TO ACCEPT UNINTENTIONALLY DELAYED PAYMENT OF MAINTENANCE FEE IN AN EXPIRED PATENT (37 CFR 1.378(c))

Patent Number	Issue Date (YYYY-MM-DD)	Application Number	Filing Date (YYYY-MM-DD)	Docket Number (if applicable)
7004435	2006-02-28	10787584	2004-02-27	

CAUTION: Maintenance fee (and surcharge, if any) payment must correctly identify: (1) the patent number and (2) the application number of the actual U.S. application leading to issuance of that patent to ensure the fee(s) is/are associated with the correct patent. 37 CFR 1.366(c) and (d).

SMALL ENTITY

☐ Patentee claims, or has previously claimed, small entity status. See 37 CFR 1.27.

LOSS OF ENTITLEMENT TO SMALL ENTITY STATUS

☐ Patentee is no longer entitled to small entity status. See 37 CFR 1.27(g)

NOT Small Entity			Small Entity		
	Fee	Code		Fee	Code
◉	3 ½ year	(1551)	○	3 ½ year	(2551)
○	7 ½ year	(1552)	○	7 ½ year	(2552)
○	11 ½ year	(1553)	○	11 ½ year	(2553)

SURCHARGE

The surcharge required by 37 CFR 1.20(i)(2) (Fee Code 1558) must be paid as a condition of accepting unintentionally delayed payment of the maintenance fee.

MAINTENANCE FEE (37 CFR 1.20(e)-(g))

The appropriate maintenance fee must be submitted with this petition.

STATEMENT

THE UNDERSIGNED CERTIFIES THAT THE DELAY IN PAYMENT OF THE MAINTENANCE FEE TO THIS PATENT WAS UNINTENTIONAL

PETITIONER(S) REQUEST THAT THE DELAYED PAYMENT OF THE MAINTENANCE FEE BE ACCEPTED AND THE PATENT REINSTATED

THIS PORTION MUST BE COMPLETED BY THE SIGNATORY OR SIGNATORIES

37 CFR 1.378(d) states: "Any petition under this section must be signed by an attorney or agent registered to practice before the Patent and Trademark Office, or by the patentee, the assignee, or other party in interest."

I certify, in accordance with 37 CFR 1.4(d)(4) that I am

◉ An attorney or agent registered to practice before the Patent and Trademark Office

○ A sole patentee

○ A joint patentee; I certify that I am authorized to sign this submission on behalf of all the other patentees.

○ A joint patentee; all of whom are signing this e-petition

○ The assignee of record of the entire interest

Patent Practitioner			
A signature of the applicant or representative is required in accordance with 37 CFR 1.33 and 10.18. Please see 37 CFR 1.4(d) for the form of the signature			
Signature	/Benoit Castel/	Date (YYYY-MM-DD)	2010-04-12
Name	Benoit Castel	Registration Number	35041

This collection of information is required by 37 CFR 1.378(c). The information is required to obtain or retain a benefit by the public which is to file (and by the USPTO to process) an application. Confidentiality is governed by 35 U.S.C. 122 and 37 CFR 1.11 and 1.14. This collection is estimated to take 1 hour to complete, including gathering, preparing, and submitting the completed application form to the USPTO. Time will vary depending upon the individual case. Any comments on the amount of time you require to complete this form and/ or suggestions for reducing this burden, should be sent to the Chief Information Officer, U.S. Patent and Trademark Office, U.S. Department of Commerce, P.O. Box 1450, Alexandria, VA 22313-1450. DO NOT SEND FEES OR COMPLETED FORMS TO THIS ADDRESS. **This form can only be used when in conjunction with EFS-Web. If this form is mailed to the USPTO, it may cause delays in reinstating the patent.**

Privacy Act Statement

The Privacy Act of 1974 (P.L. 93-579) requires that you be given certain information in connection with your submission of the attached form related to a patent application or patent. Accordingly, pursuant to the requirements of the Act, please be advised that: (1) the general authority for the collection of this information is 35 U.S.C. 2(b)(2); (2) furnishing of the information solicited is voluntary; and (3) the principal purpose for which the information is used by the U.S. Patent and Trademark Office is to process and/or examine your submission related to a patent application or patent. If you do not furnish the requested information, the U.S. Patent and Trademark Office may not be able to process and/or examine your submission, which may result in termination of proceedings or abandonment of the application or expiration of the patent.

The information provided by you in this form will be subject to the following routine uses:

1. The information on this form will be treated confidentially to the extent allowed under the Freedom of Information Act (5 U.S.C. 552) and the Privacy Act (5 U.S.C. 552a). Records from this system of records may be disclosed to the Department of Justice to determine whether the Freedom of Information Act requires disclosure of these records.

2. A record from this system of records may be disclosed, as a routine use, in the course of presenting evidence to a court, magistrate, or administrative tribunal, including disclosures to opposing counsel in the course of settlement negotiations.

3. A record in this system of records may be disclosed, as a routine use, to a Member of Congress submitting a request involving an individual, to whom the record pertains, when the individual has requested assistance from the Member with respect to the subject matter of the record.

4. A record in this system of records may be disclosed, as a routine use, to a contractor of the Agency having need for the information in order to perform a contract. Recipients of information shall be required to comply with the requirements of the Privacy Act of 1974, as amended, pursuant to 5 U.S.C. 552a(m).

5. A record related to an International Application filed under the Patent Cooperation Treaty in this system of records may be disclosed, as a routine use, to the International Bureau of the World Intellectual Property Organization, pursuant to the Patent Cooperation Treaty.

6. A record in this system of records may be disclosed, as a routine use, to another federal agency for purposes of National Security review (35 U.S.C. 181) and for review pursuant to the Atomic Energy Act (42 U.S.C. 218(c)).

7. A record from this system of records may be disclosed, as a routine use, to the Administrator, General Services, or his/her designee, during an inspection of records conducted by GSA as part of that agency's responsibility to recommend improvements in records management practices and programs, under authority of 44 U.S.C. 2904 and 2906. Such disclosure shall be made in accordance with the GSA regulations governing inspection of records for this purpose, and any other relevant (i.e., GSA or Commerce) directive. Such disclosure shall not be used to make determinations about individuals.

8. A record from this system of records may be disclosed, as a routine use, to the public after either publication of the application pursuant to 35 U.S.C. 122(b) or issuance of a patent pursuant to 35 U.S.C. 151. Further, a record may be disclosed, subject to the limitations of 37 CFR 1.14, as a routine use, to the public if the record was filed in an application which became abandoned or in which the proceedings were terminated and which application is referenced by either a published application, an application open to public inspections or an issued patent.

9. A record from this system of records may be disclosed, as a routine use, to a Federal, State, or local law enforcement agency, if the USPTO becomes aware of a violation or potential violation of law or regulation.

UNITED STATES PATENT AND TRADEMARK OFFICE

Commissioner for Patents
United States Patent and Trademark Office
P.O. Box 1450
Alexandria, VA 22313-1450
www.uspto.gov

CONNOLLY BOVE LODGE & HUTZ, LLP
1875 EYE STREET NW, SUITE 1100
WASHIGTON, DC 20036

COPY MAILED

MAR 1 4 2008

OFFICE OF PETITIONS

In re Application of :
LESKO, et al. :
Application No. 10/787,585 : DECISION ON PETITION
Filed: February 27, 2004 : TO WITHDRAW
Attorney Docket No. **32055-735.201** : FROM RECORD

This is a decision on the Request to Withdraw as attorney or agent of record under 37 C.F.R. § 1.36(b), filed August 28, 2007.

The request is **NOT APPROVED** as moot.

A review of the file record indicates that the power of attorney to **CONNOLLY BOVE LODGE & HUTZ, LLP** has been revoked by the assignee of the patent application on November 8, 2007. Accordingly, the request to withdraw under 37 C.F.R. § 1.36(b) is moot.

All future communications from the Office will continue to be directed to the below-listed address until otherwise notified by applicant.

Telephone inquires concerning this decision should be directed to the undersigned at 571-272-7253.

Monica A. Graves
Petitions Examiner
Office of Petitions

cc: **WILSON SONSINI GOODRICH & ROSATI**
650 PAGE MILL ROAD
PALO ALTO, CA 94304-1050

UNITED STATES PATENT AND TRADEMARK OFFICE

Commissioner for Patents
United States Patent and Trademark Office
P.O. Box 1450
Alexandria, VA 22313-1450
www.uspto.gov

Grant A. Johnson
IBM Corporation, Dept. 917
3605 Highway 52 North
Rochester MN 55901-7829

COPY MAILED

AUG 13 2009

OFFICE OF PETITIONS

In re Application of :
Brian John Cragun :
Application No. 10/787602 : DECISION
Filing or 371(c) Date: 02/26/2004 : ON PETITION
Attorney Docket Number: ROC920030377US1 :

This is a decision on the petition under the unintentional provisions of 37 CFR 1.137(b), filed June 3, 2009, to revive the above-identified application.

The petition is **GRANTED**.

The application became abandoned for failure to timely file a reply within the meaning of 37 CFR 1.113 to the final Office action of October 6, 2008. The proposed reply required for consideration of a petition to revive must be a Notice of Appeal (and appeal fee required by 37 CFR 41.20(b)(2), an amendment that prima facie places the application in condition for allowance, a Request for Continued Examination and submission (37 CFR 1.114), or the filing of a continuing application under 37 CFR 1.53(b). See MPEP 711.03(c)(III)(A)(2). Accordingly, the date of abandonment of this application is January 7, 2009.

The petition satisfies the requirements of 37 CFR 1.137(b) in that petitioner has supplied (1) the reply in the form of a Request for Continued Examination (RCE) and fee, and the submission required by 37 CFR 1.114; (2) the petition fee; and (3) a proper statement of unintentional delay.

Telephone inquiries concerning this decision should be directed to the undersigned at (571) 272-3232.

This application is being referred to Technology Center AU 2621 for processing of the RCE and for appropriate action by the Examiner in the normal course of business on the amendment submitted with the petition in accordance with 37 CFR 1.114.

/Derek L. Woods/
Derek L. Woods
Attorney
Office of Petitions

UNITED STATES PATENT AND TRADEMARK OFFICE

UNITED STATES DEPARTMENT OF COMMERCE
United States Patent and Trademark Office
Address: COMMISSIONER FOR PATENTS
P.O. Box 1450
Alexandria, Virginia 22313-1450
www.uspto.gov

General Motors Corporation
c/o REISING, ETHINGTON, BARNES, KISSELLE, P.C.
P.O. BOX 4390
TROY, MI 48099-4390

Mail Date: 04/21/2010

Applicant	: John J. Vajo	: DECISION ON REQUEST FOR
Patent Number	: 7601329	: RECALCULATION of PATENT
Issue Date	: 10/13/2009	: TERM ADJUSTMENT IN VIEW
Appliction No	: 10/787,617	: OF WYETH AND NOTICE OF INTENT TO
Filed	: 02/26/2004	: ISSUE CERTIFICATE OF CORRECTION
		:

The Request for Recalculation is **GRANTED** to the extent indicated.

The patent term adjustment has been determined to be **1631** days. The USPTO will *sua sponte* issue a certificate of correction reflecting the amount of PTA days determined by the recalculation.

Prior to the issuance of the certificate of correction, the USPTO will afford patentee an opportunity to be heard and request reconsideration. Accordingly, patentee has **one month or thirty (30) days**, whichever is longer, to file a request for reconsideration of this patent term adjustment calculation. See 35 U.S.C. 154(b)(3)(B)(ii) and 37 CFR 1.322(a)(4). No extensions of time will be granted under 37 CFR 1.136.

Patentee should use document code PET.OP if electronically filing a request for reconsideration of this patent term adjustment calculation. The patentee must also include the information required by 37 CFR 1.705(b)(2) and the fee required by 37 CFR 1.18(e). If patentee does not file a timely request for reconsideration of this patent term adjustment calculation including the information required by 37 CFR 1.705(b)(2) and the fee required by 37 CFR 1.18(e), the USPTO will issue a certificate of correction reflecting the PTA determination noted above.

Patentee should be aware that in order to preserve the right to review in the United States District Court for the District of Columbia of the USPTO patent term adjustment determination, patentee must ensure that he or she also take the steps required under 35 U.S.C. 154(b)(4)(A) in a timely manner. Nothing in the request for recalculation should be construed as providing an alternative time frame for commencing a civil action under 35 U.S.C. 154(b)(4)(A).

Any questions concerning this decision should be directed to the Office of Patent Legal Administration at 571-272-7702.

UNITED STATES PATENT AND TRADEMARK OFFICE

Commissioner for Patents
United States Patent and Trademark Office
P.O. Box 1450
Alexandria, VA 22313-1450
www.uspto.gov

SEP 15 2006

KRAMER LEVIN NAFTALIS & FRANKEL LLP
INTELLECTUAL PROPERTY DEPARTMENT
1177 AVENUE OF THE AMERICAS
NEW YORK NY 10036

In re Application of	:
JoAnn McLaurin	:
Serial No.: 10/787,621	: PETITION TO MAKE SPECIAL
Filed: February 27, 2003	:
Attorney Docket No.: 58657/14	:

This is in response to applicants' petition filed August 24, 2006, to make the above-identified application special under the provisions of 37 CFR 1.102(d).

Applicant has satisfied the provisions set forth in M.P.E.P. 708.02, VIII. Therefor the petition is **GRANTED**.

The following condition applies to the grant of this petition: If, upon examination, it is determined that a restriction requirement is necessary because of multiple inventions being claimed, applicant will be required to make an election without traverse of a single invention to be prosecuted. Failure to make an election without traverse will void the special status accorded in this decision.

The application will be forwarded the examiner for action on the merits commensurate with this decision.

Should there be any questions with regard to this letter please contact William R. Dixon, Jr. by letter addressed to the Director, Technology Center 1600, P.O. Box 1450, Alexandria, VA 22313-1450, or by telephone at 571-272-0519 or by facsimile transmission at the general Office facsimile number, 571-273-8300.

William R. Dixon, Jr.
Special Program Examiner
Technology Center 1600

UNITED STATES PATENT AND TRADEMARK OFFICE

Commissioner for Patents
United States Patent and Trademark Office
P.O. Box 1450
Alexandria, VA 22313-1450
www.uspto.gov

MILLEN, WHITE, ZELANO &
BRANIGAN, P.C.
2200 Clarendon Boulevard, Suite 1400
Arlington VA 22201

COPY MAILED

DEC 18 2009

OFFICE OF PETITIONS

In re Application of	:	
Joanne McLaurin	:	
Patent Number: 7,521,481	:	PATENT TERM ADJUSTMENT
Issue Date: 04/21/2009	:	
Application No. 10/787621	:	
Filing or 371(c) Date: 02/26/2004	:	
Attorney Docket Number: TTI-0002	:	

This is in response to the APPLICATION FOR PATENT TERM ADJUSTMENT, filed February 17, 2009, and on the REQUEST FOR RECONSIDERATION OF PATENT TERM ADJUSTMENT UNDER 37 C.F.R. § 1.705(d), filed May 27, 2009. Patentee submits that the correct patent term adjustment is 701 days, not 536 days as indicated on the patent. Patentee requests this correction (1) on the basis that the Office erred in assessing a reduction of 11 days pursuant to 37 CFR 1.704(c)(10) and (2) on the basis that the Office took in excess of three years to issue this patent. This matter is being properly treated under 37 CFR 1.705(d) as an application for patent term adjustment.

The Application for patent Term Adjustment Request for Reconsideration of Patent Term Adjustment ("PTA") under 37 CFR 1.705(d), is hereby **DISMISSED**.

An "APPLICATION FOR PATENT TERM ADJUSTMENT" was filed February 17, 2009. However, prior to a decision on the merits of said application for patent term adjustment, the application matured into U.S. Patent No. 7,521,481 on April 21, 2009. The patent issued with a patent term adjustment of 536 days. On May 27, 2009, a request under 37 CFR 1.705(d) was timely filed within two months of the issue date of the patent. See 37 CFR 1.705(d).

Patentee contests the reduction of 11 days pursuant to 37 CFR 1.704(c)(10) in connection with the submission on February 10, 2009 of documents concerning information disclosure statements. Patentee argues that an information disclosure statement and PTO-1449 form was filed July 16, 2004 and also on August 24, 2005. Patentee indicates the forms had not been returned to applicant with the examiner's initials indicating the references were considered during prosecution. Patentee asserts that copies of the previously filed information disclosure

statements and PTO-1449 forms were filed February 10, 2009. Patentee avers that these copies were submitted as a convenience to the PTO and were not "other papers" as specified by the rule.

A review of the application file history reveals that an information disclosure statement (IDS) and PTO-1449 was submitted July 19, 2004 and August 26, 2005 respectively. There is no indication in the application file history that applicant sought to address the matter of examiner initialed PTO-1449s prior to the mailing of the Notice of Allowance. As applicant did not address the matter prior to the mailing of the Notice of Allowance, submission of such a request for examiner initialed PTO-1449s after the mailing of the Notice of Allowance is deemed a failure to engage in reasonable efforts to conclude prosecution or processing within the meaning of 37 CFR 1.704(c)(10).

Accordingly, the request for removal of the 11 day reduction under 37 CFR 1.704(c)(10) is DISMISSED.

Patentee also references Wyeth v. Dudas, 580 F.Supp. 2d 138, 88 U.S.P.Q. 2d 1538 (D.D.C. 2008) and argues that the patent is entitled to an additional patent term adjustment of 289 under 37 CFR 1.702(b). Thus, patentee asserts entitlement to an overall patent term adjustment of 701 days (541 days under 37 CFR 1.702(a) *plus* 289 days under 37 CFR 1.702(b) *less* 129 days under 37 CFR 1.704 for applicant delay).

Under 37 CFR 1.703(f), patentees are entitled to a period of patent term adjustment equal to the period of delays based on the grounds set forth in 37 CFR 1.702 reduced by the period of time equal to the period of time during which patentees failed to engage in reasonable efforts to conclude prosecution pursuant to 37 CFR 1.704. In other words, patentees are entitled to the period of Office delay reduced by the period of applicant delay.

The Office asserts that as of the filing of the RCE on December 13, 2007, the application was pending three years and 289 days after its filing date. The Office agrees that certain action was not taken within the specified time frame, and thus, the entry of a period of adjustment totalling 572 days that accrued prior to the filing of the RCE is correct. The application was accorded an adjustment of 541 days under 37 CFR 1.702(a)(1) and an adjustment of 31 days under 37 CFR 1.702(a)(2) prior to the filing of the RCE. At issue is whether patentees should accrue 289 days for Office failure to take a certain action within a specified time frame (or examination delay), as well as 572 days of patent term adjustment for the Office taking in excess of three years to issue the patent.

The Office contends that the period of 289 days of delay in issuing the patent overlaps with the 572 days of examination delay under 37 CFR 1.702(a) that occurred prior to submission of the RCE. Patentees' calculation of the period of overlap is inconsistent with the Office's interpretation of this provision. 35 U.S.C. 154(b)(2)(A) limits the adjustment of patent term, as follows:

> To the extent that the periods of delay attributable to grounds specified in paragraph (1) overlap, the period of any adjustment granted under this subsection shall not exceed the actual number of days the issuance of the patent was delayed.

Likewise, 35 CFR 1.703(f) provides that:

> To the extent that periods of delay attributable to the grounds specified in § 1.702 overlap, the period of adjustment granted under this section shall not exceed the actual number of days the issuance of the patent was delayed.

As explained in *Explanation of 37 CFR 1.703(f) and of the United States Patent and Trademark Office Interpretation of 35 U.S.C. 154(b)(2)(A)*, 69 Fed. Reg. 34283 (June 21, 2004), the Office interprets 35 U.S.C. 154(b)(2)(A) as permitting either patent term adjustment under 35 U.S.C. 154(b)(1)(A)(i)-(iv), or patent term adjustment under 35 U.S.C. 154(b)(1)(B), but not as permitting patent term adjustment under both 35 U.S.C. 154(b)(1)(A)(i)-(iv) and 154(b)(1)(B). Accordingly, the Office implements the overlap provision as follows:

> If an application is entitled to an adjustment under 35 U.S.C. 154(b)(1)(B), the entire period during which the application was pending (except for periods excluded under 35 U.S.C. 154(b)(1)(B)(i)-(iii)), and not just the period beginning three years after the actual filing date of the application, is the period of delay under 35 U.S.C. 154(b)(1)(B) in determining whether periods of delay overlap under 35 U.S.C. 154(b)(2)(A). Thus, any days of delay for Office issuance of the patent more than 3 years after the filing date of the application, which overlap with the days of patent term adjustment accorded prior to the issuance of the patent will not result in any additional patent term adjustment. See 35 U.S.C. 154(b)(1)(B), 35 U.S.C. 154(b)(2)(A), and 37 CFR § 1.703(f). See *Changes to Implement Patent Term Adjustment Under Twenty Year Term; Final Rule*, 65 Fed. Reg. 56366 (Sept. 18, 2000). See also *Revision of Patent Term Extension and Patent Term Adjustment Provisions; Final Rule*, 69 Fed. Reg. 21704 (April 22, 2004), 1282 Off. Gaz. Pat. Office 100 (May 18, 2004). See also *Explanation of 37 CFR 1.703(f) and of the United States Patent and Trademark Office Interpretation of 35 U.S.C. 154(b)(2)(A),* 69 Fed. Reg. 34283 (June 21, 2004).

The current wording of § 1.703(f) was revised in response to the misinterpretation of this provision by a number of Patentees. The rule was slightly revised to more closely track the corresponding language of 35 U.S.C. 154(b)(2)(A). The relevant portion differs only to the extent that the statute refers back to provisions of the statute whereas the rule refers back to sections of the rule. This was not a substantive change to the rule nor did it reflect a change of the Office's interpretation of 35 U.S.C. 154(b)(2)(A). As stated in the *Explanation of 37 CFR 1.703(f) and of the United States Patent and Trademark Office Interpretation of 35 U.S.C. 154(b)(2)(A)*, the Office has consistently taken the position that if an application is entitled to an adjustment under the three-year pendency provision of 35 U.S.C. 154(b)(1)(B), the entire period during which the application was pending before the Office (except for periods excluded under 35 U.S.C. 154(b)(1)(B)(i)-(iii)), and not just the period beginning three years after the actual

filing date of the application, is the relevant period under 35 U.S.C. 154(b)(1)(B) in determining whether periods of delay "overlap" under 35 U.S.C. 154(b)(2)(A).

This interpretation is consistent with the statute. Taken together the statute and rule provide that to the extent that periods of delay attributable to grounds specified in 35 U.S.C. 154(b)(1) and in corresponding § 1.702 overlap, the period of adjustment granted shall not exceed the actual number of days the issuance of the patent was delayed. The grounds specified in these sections cover the A) guarantee of prompt Patent and Trademark Office responses, B) guarantee of no more than 3-year application pendency, and C) guarantee or adjustments for delays due to interference, secrecy orders and appeals. A section by section analysis of 35 U.S.C. 154(b)(2)(A) specifically provides that:

> Section 4402 imposes limitations on restoration of term. In general, pursuant to [35 U.S.C.] 154(b)(2)(A)-(C), total adjustments granted for restorations under [35 U.S.C. 154](b)(1) are reduced as follows: (1) To the extent that there are multiple grounds for extending the term of a patent that may exist simultaneously (e.g., delay due to a secrecy order under [35 U.S.C.] 181 and administrative delay under [35 U.S.C.] 154(b)(1)(A)), the term should not be extended for each ground of delay but only for the actual number of days that the issuance of a patent was delayed; See 145 Cong. Rec. S14,718[1]

As such, the period for over three-year pendency does not overlap only to the extent that the actual dates in the period beginning three years after the date on which the application was filed overlap with the actual dates in the periods for failure of the Office to take action within specified time frames. In other words, consideration of the overlap does not begin three years after the filing date of the application.

In this instance, the relevant period under 35 U.S.C. 154(b)(1)(B) in determining whether periods of delay "overlap" under 35 U.S.C. 154(b)(2)(A) is the entire period during which the application was pending before the Office, February 26, 2004, and ending December 13, 2007, the day before the date that the RCE was filed on December 14, 2007. Prior to the filing of the RCE, 572 days of patent term adjustment were accorded for the Office failing to respond within a specified time frame during the pendency of the application. All of the 289 days of Office delay in issuing the patent overlap with the 572 days of Office examination delay. During that time, the issuance of the patent was delayed by 572 days, not 572 days and 289 days. The Office took 14 months and 541 days to issue a first Office action and four months and 31 days to respond to a reply under 35 USC 132. Otherwise, prior to the filing of the RCE, the Office took all actions set forth in 37 CFR 1.702(a) within the prescribed timeframes. Nonetheless, given the initial 572 days of Office examination delay and the time allowed within the time frames for processing and examination, at the time of filing of the RCE, the application was pending three years and 289 days after its filing date. However, the Office did not delay 572 days and also

---

[1] The AIPA is title IV of the Intellectual Property and Communications Omnibus Reform Act of 1999 (S. 1948), which was incorporated and enacted as law as part of Pub. L. 106-113. The Conference Report for H.R. 3194, 106th Cong. 1st Sess. (1999), which resulted in Pub. L. 106-113, does not contain any discussion (other than the incorporated language) of S. 1948. A section-by-section analysis of S. 1948, however, was printed in the Congressional Record at the request of Senator Lott, See 145 Cong. Rec. S14,708-26 (1999)(daily ed. Nov. 17, 1999).

delay an additional 289 days. As 572 days is actual number of days delay of the patent was delayed at the time of submission of the RCE, entry of both periods is not warranted.

Accordingly, at issuance, the Office entered 536 days of patent term adjustment, having considered the 289 days of Office delay under the three-year pendency provision in conjunction with the 572 days of delay under 37 CFR 1.702(a) that accrued prior to submission of the RCE and the 104 days of adjustment under 37 CFR 1.702(a) that accrued subsequent to the submission of the RCE, reduced 140 days for applicant delay. (It is noted that the application for patent term adjustment does not acknowledge any adjustments under 37 CFR 1.702(a) beyond the 541 days of adjustment under 37 CFR 1.702(a).)

In view thereof, no adjustment to the patent term will be made.

The Office acknowledges submission of the $200.00 fee set forth in 37 CFR 1.18(e). No additional fees are required.

Telephone inquiries specific to this matter should be directed to Attorney Derek Woods, at (571) 272-3232.

/ALESIA M. BROWN/

Alesia Brown
Senior Petitions Attorney
Office of Petitions
Office of the Deputy Commissioner
for Patent Examination Policy

UNITED STATES PATENT AND TRADEMARK OFFICE

UNITED STATES DEPARTMENT OF COMMERCE
United States Patent and Trademark Office
Address: COMMISSIONER FOR PATENTS
P.O. Box 1450
Alexandria, Virginia 22313-1450
www.uspto.gov

MILLEN, WHITE, ZELANO & BRANIGAN, P.C.
2200 Clarendon Boulevard, Suite 1400
Arlington, VA 22201

Mail Date: 04/21/2010

Applicant	: JoAnne McLaurin	: DECISION ON REQUEST FOR
Patent Number	: 7521481	: RECALCULATION of PATENT
Issue Date	: 04/21/2009	: TERM ADJUSTMENT IN VIEW
Appliction No	: 10/787,621	: OF WYETH AND NOTICE OF INTENT TO
Filed	: 02/26/2004	: ISSUE CERTIFICATE OF CORRECTION
		:

The Request for Recalculation is **GRANTED** to the extent indicated.

The patent term adjustment has been determined to be **734** days. The USPTO will *sua sponte* issue a certificate of correction reflecting the amount of PTA days determined by the recalculation.

Prior to the issuance of the certificate of correction, the USPTO will afford patentee an opportunity to be heard and request reconsideration. Accordingly, patentee has **one month or thirty (30) days**, whichever is longer, to file a request for reconsideration of this patent term adjustment calculation. See 35 U.S.C. 154(b)(3)(B)(ii) and 37 CFR 1.322(a)(4). No extensions of time will be granted under 37 CFR 1.136.

Patentee should use document code PET.OP if electronically filing a request for reconsideration of this patent term adjustment calculation. The patentee must also include the information required by 37 CFR 1.705(b)(2) and the fee required by 37 CFR 1.18(e). If patentee does not file a timely request for reconsideration of this patent term adjustment calculation including the information required by 37 CFR 1.705(b)(2) and the fee required by 37 CFR 1.18(e), the USPTO will issue a certificate of correction reflecting the PTA determination noted above.

Patentee should be aware that in order to preserve the right to review in the United States District Court for the District of Columbia of the USPTO patent term adjustment determination, patentee must ensure that he or she also take the steps required under 35 U.S.C. 154(b)(4)(A) in a timely manner. Nothing in the request for recalculation should be construed as providing an alternative time frame for commencing a civil action under 35 U.S.C. 154(b)(4)(A).

Any questions concerning this decision should be directed to the Office of Patent Legal Administration at 571-272-7702.

UNITED STATES PATENT AND TRADEMARK OFFICE

UNITED STATES DEPARTMENT OF COMMERCE
United States Patent and Trademark Office
Address: COMMISSIONER FOR PATENTS
P.O. Box 1450
Alexandria, Virginia 22313-1450
www.uspto.gov

MILLEN, WHITE, ZELANO & BRANIGAN, P.C.
2200 Clarendon Boulevard, Suite 1400
Arlington, VA 22201

Mail Date: 05/18/2010

Applicant : JoAnne McLaurin
Patent Number : 7521481
Issue Date : 04/21/2009
Application No: 10/787,621
Filed : 02/26/2004

: NOTICE CONCERNING IMPROPER
: CALCULATION OF PATENT TERM
: ADJUSTMENT BASED UPON USPTO
: IMPROPERLY MEASURING REDUCTION
: PERIOD UNDER 37 CFR 1.704(c)(10).

The United States Patent and Trademark Office (USPTO) discovered that in processing the recent recalculation decisions mailed in response to patentee's filed Request for Recalculation of Patent Term Adjustment in view of Wyeth, the USPTO improperly measured the reduction period for reductions under 37 CFR 1.704(c)(10). Pursuant to 37 CFR 1.704(c)(10), patentee's reduction begins on the date of filing the amendment under 37 CFR 1.312 ("1.312 amendment") or other related paper and ends on the date that the Office mails a response to the filing of the 1.312 amendment or other paper. It has been discovered that during the recalculation, the calculation failed to the limit the reduction to the mail date of the response to the 1.312 amendment or other paper. Accordingly, patentee's reductions were greater than warranted.

This notice **VACATES** the previous GRANTED request for recalculation and provides patentee with a revised GRANTED recalculation.

The patent term adjustment has been determined to be **794** days. The USPTO will *sua sponte* issue a certificate of correction reflecting the amount of patent term adjustment (PTA) days determined by the recalculation.

Prior to the issuance of the certificate of correction, the USPTO will afford patentee an opportunity to be heard and request reconsideration. Accordingly, patentee has **one month or thirty (30) days** from the mail date of this notice, whichever is longer, to file a request for reconsideration of this PTA calculation. See 35 U.S.C. § 154(b)(3)(B)(ii) and 37 CFR 1.322(a)(4).

Patentee should use document code PET.OP if electronically filing a request for reconsideration of this PTA calculation. The patentee must also include the information required by 37 CFR 1.705(b)(2), and the fee required by 37 CFR 1.18(e). If patentee does not file a timely request for reconsideration of this PTA calculation, including the information required by 37 CFR 1.705(b)(2) and the fee required by 37 CFR 1.18(e), the USPTO will issue a certificate of correction reflecting the PTA determination noted above.

Patentee should be aware that in order to preserve the right of review of the USPTO's PTA determination in the United States District Court for the District of Columbia, patentee must ensure that the steps required under 35 U.S.C. § 154 (b)(4) are taken in a timely manner. Nothing in the request for recalculation should be construed as providing an alternative time frame for commencing a civil action under 35 U.S.C. § 154(b)(4).

UNITED STATES PATENT AND TRADEMARK OFFICE

UNITED STATES DEPARTMENT OF COMMERCE
United States Patent and Trademark Office
Address: COMMISSIONER FOR PATENTS
P.O. Box 1450
Alexandria, Virginia 22313-1450
www.uspto.gov

APPL NO.	FILING OR 371 (c) DATE	ART UNIT	FIL FEE REC'D	ATTY.DOCKET NO	DRAWINGS	TOT CLMS	IND CLMS
10/787,634	02/26/2004	2818	1252	5649-1189	5	42	4

CONFIRMATION NO. 5796

Timothy J. O'Sullivan
Myers Bigel Sibley & Sajovec
Post Office Box 37428
Raleigh, NC 27627

CORRECTED FILING RECEIPT

OC000000013013907

Date Mailed: 06/21/2004

Receipt is acknowledged of this regular Patent Application. It will be considered in its order and you will be notified as to the results of the examination. Be sure to provide the U.S. APPLICATION NUMBER, FILING DATE, NAME OF APPLICANT, and TITLE OF INVENTION when inquiring about this application. Fees transmitted by check or draft are subject to collection. Please verify the accuracy of the data presented on this receipt. **If an error is noted on this Filing Receipt, please write to the Office of Initial Patent Examination's Filing Receipt Corrections, facsimile number 703-746-9195. Please provide a copy of this Filing Receipt with the changes noted thereon. If you received a "Notice to File Missing Parts" for this application, please submit any corrections to this Filing Receipt with your reply to the Notice. When the USPTO processes the reply to the Notice, the USPTO will generate another Filing Receipt incorporating the requested corrections (if appropriate).**

Applicant(s)

Horii Hideki, Seoul, KOREA, REPUBLIC OF;

Domestic Priority data as claimed by applicant

Foreign Applications

REPUBLIC OF KOREA 2003-0013416 03/04/2003

If Required, Foreign Filing License Granted: 05/18/2004

Projected Publication Date: 09/30/2004

Non-Publication Request: No

Early Publication Request: No

Title

Phase change storage cells for memory devices, memory devices having phase change storage cells and methods of forming the same

Preliminary Class

257

LICENSE FOR FOREIGN FILING UNDER
Title 35, United States Code, Section 184
Title 37, Code of Federal Regulations, 5.11 & 5.15

GRANTED

The applicant has been granted a license under 35 U.S.C. 184, if the phrase "IF REQUIRED, FOREIGN FILING LICENSE GRANTED" followed by a date appears on this form. Such licenses are issued in all applications where the conditions for issuance of a license have been met, regardless of whether or not a license may be required as set forth in 37 CFR 5.15. The scope and limitations of this license are set forth in 37 CFR 5.15(a) unless an earlier license has been issued under 37 CFR 5.15(b). The license is subject to revocation upon written notification. The date indicated is the effective date of the license, unless an earlier license of similar scope has been granted under 37 CFR 5.13 or 5.14.

This license is to be retained by the licensee and may be used at any time on or after the effective date thereof unless it is revoked. This license is automatically transferred to any related applications(s) filed under 37 CFR 1.53(d). This license is not retroactive.

The grant of a license does not in any way lessen the responsibility of a licensee for the security of the subject matter as imposed by any Government contract or the provisions of existing laws relating to espionage and the national security or the export of technical data. Licensees should apprise themselves of current regulations especially with respect to certain countries, of other agencies, particularly the Office of Defense Trade Controls, Department of State (with respect to Arms, Munitions and Implements of War (22 CFR 121-128)); the Office of Export Administration, Department of Commerce (15 CFR 370.10 (j)); the Office of Foreign Assets Control, Department of Treasury (31 CFR Parts 500+) and the Department of Energy.

NOT GRANTED

No license under 35 U.S.C. 184 has been granted at this time, if the phrase "IF REQUIRED, FOREIGN FILING LICENSE GRANTED" DOES NOT appear on this form. Applicant may still petition for a license under 37 CFR 5.12, if a license is desired before the expiration of 6 months from the filing date of the application. If 6 months has lapsed from the filing date of this application and the licensee has not received any indication of a secrecy order under 35 U.S.C. 181, the licensee may foreign file the application pursuant to 37 CFR 5.15(b).

UNITED STATES PATENT AND TRADEMARK OFFICE

Commissioner for Patents
United States Patent and Trademark Office
P.O. Box 1450
Alexandria, VA 22313-1450
www.uspto.gov

JOHN D. PEMBERTON
7405 BUCKSKIN COURT
FORT WORTH TX 76137

COPY MAILED

MAY 0 8 2007

OFFICE OF PETITIONS

In re Application of :
Bell, Kevin R. :
Application No. 10/787,637 : ON PETITION
Filed: February 26, 2004 :
Attorney Docket No. SLATEK.00002 :

This is a decision on the petition under 37 C.F.R. § 1.137(b), filed March 14, 2007, to revive the above-identified application and a petition under 37 CFR 1.182 to expedite the petition.

The petitions are **GRANTED.**

The petition satisfies the conditions for revival pursuant to the provisions of 37 CFR 1.137(b) in that (1) the reply in the form of an Amendment; (2) the petition fee; and (3) the required statement of unintentional delay have been received. Accordingly, the response has been accepted as having been unintentionally delayed.

Further, the expedited petition fee of $400.00 was submitted.

This matter is being referred to Technology Center 2100 for further examination.

Telephone inquiries regarding this decision should be directed to the undersigned at (571) 272-3206.

Liana Walsh
Petitions Examiner
Office of Petitions

UNITED STATES PATENT AND TRADEMARK OFFICE

UNITED STATES DEPARTMENT OF COMMERCE
United States Patent and Trademark Office
Address: COMMISSIONER FOR PATENTS
P.O. Box 1450
Alexandria, Virginia 22313-1450
www.uspto.gov

PERKINS COIE LLP (BOEING)
P.O. BOX 1247
PATENT - SEA
SEATTLE, WA 98111-1247

Mail Date: 04/20/2010

Applicant	: William D. Tafs	: DECISION ON REQUEST FOR
Patent Number	: 7577501	: RECALCULATION of PATENT
Issue Date	: 08/18/2009	: TERM ADJUSTMENT IN VIEW
Appliction No	: 10/787,644	: OF WYETH AND NOTICE OF INTENT TO
Filed	: 02/26/2004	: ISSUE CERTIFICATE OF CORRECTION
		:

The Request for Recalculation is **GRANTED** to the extent indicated.

The patent term adjustment has been determined to be **783** days. The USPTO will *sua sponte* issue a certificate of correction reflecting the amount of PTA days determined by the recalculation.

Prior to the issuance of the certificate of correction, the USPTO will afford patentee an opportunity to be heard and request reconsideration. Accordingly, patentee has **one month or thirty (30) days**, whichever is longer, to file a request for reconsideration of this patent term adjustment calculation. See 35 U.S.C. 154(b)(3)(B)(ii) and 37 CFR 1.322(a)(4). No extensions of time will be granted under 37 CFR 1.136.

Patentee should use document code PET.OP if electronically filing a request for reconsideration of this patent term adjustment calculation. The patentee must also include the information required by 37 CFR 1.705(b)(2) and the fee required by 37 CFR 1.18(e). If patentee does not file a timely request for reconsideration of this patent term adjustment calculation including the information required by 37 CFR 1.705(b)(2) and the fee required by 37 CFR 1.18(e), the USPTO will issue a certificate of correction reflecting the PTA determination noted above.

Patentee should be aware that in order to preserve the right to review in the United States District Court for the District of Columbia of the USPTO patent term adjustment determination, patentee must ensure that he or she also take the steps required under 35 U.S.C. 154(b)(4)(A) in a timely manner. Nothing in the request for recalculation should be construed as providing an alternative time frame for commencing a civil action under 35 U.S.C. 154(b)(4)(A).

Any questions concerning this decision should be directed to the Office of Patent Legal Administration at 571-272-7702.

9-6-05

OIPE
SEP 02 2005
PATENT & TRADEMARK OFFICE

PATENT
Attorney's Docket No. 3521.185

ART UNIT: 1752

EXAMINER: Unassigned

IN THE UNITED STATES PATENT AND TRADEMARK OFFICE

In re Application of:
SOMIT TALWAR et. al

Serial No.: 10/787,664

Filed: February 26, 2004

Examiner: J. Johnson
A.U.: 1725

PETITION TO MAKE SPECIAL

BASED ON APPLICANT'S AGE

For: LASER SCANNING APPARATUS AND METHODS FOR THERMAL PROCESSING

Commissioner for Patents
P.O. Box 1450
Alexandria, VA 22313-1450

SIR:

EXPRESS MAIL CERTIFICATE

I hereby certify that this paper, and the listed enclosures, and fee is being deposited with the United States Postal Service "Express Mail Post Office to Addressee" service under 37 CFR 1.10 on the date indicated below and is addressed to Commissioner for Patents, P.O. Box 1450, Alexandria, VA 22313-1450 with the Express Mail Label No. EV484314656US on September 2, 2005.

Allston L. Jones, Attorney for Applicant

Dear Sir:

PETITION GRANTED

Richard Crispino
Special Program Examiner
TC 1700SEP 2 6 2005

UNITED STATES PATENT AND TRADEMARK OFFICE

COMMISSIONER FOR PATENTS
UNITED STATES PATENT AND TRADEMARK OFFICE
P.O. BOX 1450
ALEXANDRIA, VA 22313-1450
www.uspto.gov

Fitzpatrick, Cella, Harper & Scinto
30 Rockefeller Plaza
New York, NY 10112

COPY MAILED

DEC 0 8 2004

OFFICE OF PETITIONS

In re Application of :
Louis Genevie :
Application No. 10/787,682 : DECISION GRANTING
Filed: February 25, 2004 : PETITION
Attorney Docket No. 02954.000003 :

This is a decision on the petition filed June 9, 2004, requesting that the above-identified application be accorded a filing date of February 25, 2004, which includes pages 6 and 7.

The petition is **GRANTED**.

The application was filed on February 25, 2004. However, the Office of Initial Patent Examination mailed a "Notice of Omitted Item(s) in a Nonprovisional Application" on May 20, 2004 stating that pages 6 and 7 appear to have been omitted.

In response, applicant filed the present petition and a copy of the applicant's postcard receipt acknowledging receipt of 24 pages of the specification: claims and abstract on February 25, 2004 in the United States Patent and Trademark Office (USPTO). Additionally, applicants resubmitted pages 6 and 7.

MPEP 503 in pertinent part states:

> "A post card receipt which itemizes and properly identifies the papers which are being filed serves as prima facie evidence of receipt in the PTO of all the items listed thereon on the date stamped thereon by the PTO."

While the present record contains 22 pages of the specification (namely, pages 1-5 and 8-15), 6 pages of claims, and 1 page of the abstract, pages 6 and 7 were not found among the application papers. However, the evidence is convincing that pages 6 and 7 were present on filing on

February 25, 2004 but were subsequently misplaced after receipt in the USPTO. Accordingly, this application is considered to have been complete on filing.

Since the Office erred by mailing the Notice, the petition fee of $130 will not been charged to petitioner's deposit account.

This application file is being referred to the Office of Initial Patent Examination Division for further **processing with a filing date of February 25, 2004, with an indication on the filing receipt that 24 pages of specification were present on filing and using the pages 6 and 7 supplied with the instant petition.**

Telephone inquiries concerning this matter may be directed to Marianne Jenkins at (703) 306-3475.

Brian Hearn

Brian Hearn
Senior Petitions Examiner
Office of Petitions
Office of the Deputy Commissioner
For Patent Examination Policy

UNITED STATES PATENT AND TRADEMARK OFFICE

Commissioner for Patents
United States Patent and Trademark Office
P.O. Box 1450
Alexandria, VA 22313-1450
www.uspto.gov

APPLICATION NUMBER	FILING/RECEIPT DATE	FIRST NAMED APPLICANT	ATTORNEY DOCKET NUMBER
10/787,692	02/26/2004	Gurtej S. Sandhu	MIO 0085 VA

DINSMORE & SHOHL LLP
ONE DAYTON CENTRE, ONE SOUTH MAIN STREET
SUITE 1300
DAYTON OH 45402-2023

DATE MAILED: September 13, 2007

DECISION GRANTING PETITION UNDER 37 CFR 1.138(d)
The declaration of express abandonment is recognized

This is in response to the petition under 37 CFR 1.138(d) filed August 13, 2007, requesting for a refund of any previously paid search fee and excess claims fee in the above-identified application.

The petition is granted.

The express abandonment is recognized. Any previously paid search fee and excess claims fee are hereby refunded.

Any inquiries concerning this decision should be directed to the Pre-Grant Publication Division at (703) 605-4283.

Barbara J. Debnam
Pre-Grant Publication Division

UNITED STATES PATENT AND TRADEMARK OFFICE

COMMISSIONER FOR PATENTS
UNITED STATES PATENT AND TRADEMARK OFFICE
P.O. BOX 1450
ALEXANDRIA, VA 22313-1450
WWW.USPTO.GOV

Paper No. None

Striker Striker & Stenby
103 East Neck Road
Huntington NY 11743

COPY MAILED
JUN 05 2006
OFFICE OF PETITIONS

In re Application of :
Peter Kessler :
Application No. 10/787,697 : DECISION ON PETITION UNDER
Filed: February 26, 2004 : 37 C.F.R. §1.181(A)
Attorney Docket Number: 1920A :
Title: WIPER ARMS, AND METHOD :
FOR PRODUCING WIPER ARMS

This is a decision on the petition under 37 CFR §1.181(a), filed December 12, 2005, to withdraw the holding of abandonment.

The Office regrets the delay in issuing this decision.

BACKGROUND

The above-identified application became abandoned for failure to reply in a timely manner to the non-final Office action, mailed April 19, 2005, which set a shortened statutory period for reply of three (3) months. No response was received, and no extensions of time under the provisions of 37 C.F.R. §1.136(a) were requested. Accordingly, the above-identified application became abandoned on July 20, 2005. A notice of abandonment was mailed on November 2, 2005.

With the present petition, petitioner has asserted that a reply was timely submitted on July 13, 2005, and has provided a copy of this submission.

RELEVANT PORTION OF THE C.F.R.

37 CFR §1.8(b) sets forth, *in toto*:

> (b) In the event that correspondence is considered timely filed by being mailed or transmitted in accordance with paragraph (a) of this section, but not received in the U.S. Patent and Trademark Office after a reasonable amount of time has elapsed from the time of mailing or transmitting of the correspondence, or after the application is held to be abandoned, or after the proceeding is dismissed, terminated, or decided with prejudice, the correspondence will be considered timely if the party who forwarded such correspondence:
>
> (1) Informs the Office of the previous mailing or transmission of the correspondence promptly after becoming aware that the Office has no evidence of receipt of the correspondence;
>
> (2) Supplies an additional copy of the previously mailed or transmitted correspondence and certificate; and
>
> (3) Includes a statement which attests on a personal knowledge basis or to the satisfaction of the Director to the previous timely mailing or transmission. If the correspondence was sent by facsimile transmission, a copy of the sending unit's report confirming transmission may be used to support this statement.

ANALYSIS

Petitioner has asserted that a response to the notice was timely submitted via facsimile transmission on July 13, 2005. Petitioner has submitted a copy of this response, as well as a copy of his certificate of facsimile transmission, and has included a statement from one having personal knowledge of the transmission. However, the Office cannot withdraw the holding of abandonment. A discussion follows.

The present application, 10/787,697, was filed on February 26, 2004, and has been assigned to Examiner Stephanie Mummert in Art Unit 1637.

It is noted that the certificate of facsimile transmission contains the incorrect serial number (10/787,687), the wrong Examiner name (Graham, G.), the wrong filing date (the month is blurred, but it appears to read either October, November, or December 19, 2001), and the wrong Art Unit (1744). The inventor name and the attorney docket number are correct, and a mere portion of the title appears on this document. As such, the Office would have had no reason to match this certificate of facsimile transmission with the present application.

Turning to the amendment itself, the Office would have had even less reason to associate this submission with the present file. The serial number appears as 10/025,707, the Examiner name is listed as "Gary K. Graham," the filing date is given as December 19, 2001, and the Art Unit is identified as 1744. Only the inventor's name is correct.

It is noted that on the first page of the present petition, Petitioner has asserted over his registration number that both the certificate of facsimile transmission and the amendment are copies of that which was submitted on July 13, 2005.

CONCLUSION

The petition must be **DISMISED**.

Any reply must be submitted within **TWO (2) MONTHS** from the mail date of this decision. Extensions of time under 37 C.F.R. §1.136(a) are permitted. The reply should include a cover letter entitled "Renewed Petition Under 37 C.F.R. §1.181." This is not a final agency action within the meaning of 5 U.S.C 704.

The renewed petition should indicate in a prominent manner that the attorney handling this matter is Paul Shanoski, and may be submitted by mail[1], hand-delivery[2], or facsimile[3].

Telephone inquiries regarding *this decision* should be directed to the undersigned at (571) 272-3225. All other inquiries concerning examination procedures or status of the application should be directed to the Technology Center.

It is noted that on January 6, 2006, Petitioner submitted a petition under 37 C.F.R. §1.137(b). A decision on that petition will follow in due course.

Paul Shanoski
Senior Attorney
Office of Petitions
United States Patent and Trademark Office

1 Mail Stop Petition, Commissioner for Patents, United States Patent and Trademark Office, P.O. Box 1450, Alexandria, VA, 22313-1450.
2 Customer Window, Randolph Building, 401 Dulaney Street, Alexandria, VA, 22314.
3 (571) 273-8300- please note this is a central facsimile number.

UNITED STATES PATENT AND TRADEMARK OFFICE

COMMISSIONER FOR PATENTS
UNITED STATES PATENT AND TRADEMARK OFFICE
P.O. BOX 1450
ALEXANDRIA, VA 22313-1450
WWW.USPTO.GOV

Paper No. None

COPY MAILED
JUN 0 8 2006
OFFICE OF PETITIONS

Striker Striker & Stenby
103 East Neck Road
Huntington NY 11743

In re Application of	:	
Peter Kessler	:	
Application No. 10/787,697	:	DECISION ON PETITION UNDER
Filed: February 26, 2004	:	37 C.F.R. §1.137(B)
Attorney Docket Number: 1920A	:	
Title: WIPER ARMS, AND METHOD FOR PRODUCING WIPER ARMS	:	

This is a decision on the petition filed January 6, 2006, pursuant to 37 C.F.R. §1.137(b)[1], to revive the above-identified application.

The above-identified application became abandoned for failure to reply in a timely manner to the non-final Office action, mailed April 19, 2005, which set a shortened statutory period for reply of three (3) months. No response was received, and no extensions of time under the provisions of 37 C.F.R. §1.136(a) were requested. Accordingly, the above-identified application became abandoned on July 20, 2005. A notice of abandonment was mailed on November 2, 2005.

---

1 A grantable petition pursuant to 37 C.F.R. 1.137(b) must be accompanied by:
(1) The reply required to the outstanding Office action or notice, unless previously filed;
(2) The petition fee as set forth in § 1.17(m);
(3) A statement that the entire delay in filing the required reply from the due date for the reply until the filing of a grantable petition pursuant to this paragraph was unintentional. The Commissioner may require additional information where there is a question whether the delay was unintentional, and;
(4) Any terminal disclaimer (and fee as set forth in § 1.20(d)) required pursuant to paragraph (d) of this section.

A petition under 37 C.F.R. §1.181(a) was received on December 12, 2005, and was dismissed via the mailing of a decision on June 5, 2006.

The present petition was received on January 6, 2006, along with an amendment, and the proper statement of unintentional delay. The petition fee has been charged to Petitioner's Deposit Account. It is noted that no terminal disclaimer is required.

As such, the petition is **GRANTED**.

The Technology Center will be notified of this decision. The Technology Center's support staff will notify the Examiner of this decision, so that the concurrently submitted amendment can be processed.

The general phone number for the Office of Petitions which should be used for status requests is (571) 272-3282. Telephone inquiries regarding *this decision* should be directed to the undersigned at (571) 272-3225.

Paul Shanoski
Senior Attorney
Office of Petitions
United States Patent and Trademark Office

UNITED STATES PATENT AND TRADEMARK OFFICE

UNITED STATES DEPARTMENT OF COMMERCE
United States Patent and Trademark Office
Address: COMMISSIONER FOR PATENTS
P.O. Box 1450
Alexandria, Virginia 22313-1450
www.uspto.gov

XILINX, INC
ATTN: LEGAL DEPARTMENT
2100 LOGIC DR
SAN JOSE, CA 95124

Mail Date: 04/21/2010

Applicant	: Stephen M. Trimberger	: DECISION ON REQUEST FOR
Patent Number	: 7607025	: RECALCULATION of PATENT
Issue Date	: 10/20/2009	: TERM ADJUSTMENT IN VIEW
Appliction No	: 10/787,704	: OF WYETH AND NOTICE OF INTENT TO
Filed	: 02/26/2004	: ISSUE CERTIFICATE OF CORRECTION
		:

The Request for Recalculation is **GRANTED** to the extent indicated.

The patent term adjustment has been determined to be **1174** days. The USPTO will *sua sponte* issue a certificate of correction reflecting the amount of PTA days determined by the recalculation.

Prior to the issuance of the certificate of correction, the USPTO will afford patentee an opportunity to be heard and request reconsideration. Accordingly, patentee has **one month or thirty (30) days**, whichever is longer, to file a request for reconsideration of this patent term adjustment calculation. See 35 U.S.C. 154(b)(3)(B)(ii) and 37 CFR 1.322(a)(4). No extensions of time will be granted under 37 CFR 1.136.

Patentee should use document code PET.OP if electronically filing a request for reconsideration of this patent term adjustment calculation. The patentee must also include the information required by 37 CFR 1.705(b)(2) and the fee required by 37 CFR 1.18(e). If patentee does not file a timely request for reconsideration of this patent term adjustment calculation including the information required by 37 CFR 1.705(b)(2) and the fee required by 37 CFR 1.18(e), the USPTO will issue a certificate of correction reflecting the PTA determination noted above.

Patentee should be aware that in order to preserve the right to review in the United States District Court for the District of Columbia of the USPTO patent term adjustment determination, patentee must ensure that he or she also take the steps required under 35 U.S.C. 154(b)(4)(A) in a timely manner. Nothing in the request for recalculation should be construed as providing an alternative time frame for commencing a civil action under 35 U.S.C. 154(b)(4)(A).

Any questions concerning this decision should be directed to the Office of Patent Legal Administration at 571-272-7702.

UNITED STATES PATENT AND TRADEMARK OFFICE

COMMISSIONER FOR PATENTS
UNITED STATES PATENT AND TRADEMARK OFFICE
P.O. BOX 1450
ALEXANDRIA, VA 22313-1450
www.uspto.gov

Adrienne B. Naumann, Esq.
8210 North Tripp
Skokie, IL 60076

COPY MAILED

MAR 16 2005

OFFICE OF PETITIONS

In re Application of
Shaw
Application No. 10/787,723
Filed: February 26, 2004
For: ELECTROMAGNETIC
INTEGRATIVE DOOR LOCKING DEVICE

: DECISION ON PETITION

This decision is in response to the "PETITION TO DIRECTOR PURSUANT TO 37 CFR SECTION 1.181," filed January 30, 2005.

The above-identified application was filed February 26, 2004. On May 18, 2004, a Notice to File Corrected Application Papers was mailed requiring, *inter alia*, replacement drawings in compliance with 37 C.F.R. §§ 1.84 and 1.121. The Notice to File Corrected Application Papers indicated that the drawings submitted on filing were not acceptable due to quality. Responses to the Notice to File Corrected Application Papers were filed May 28, 2004 and July 1, 2004. The response submitted May 28, 2004 did not included replacement drawings. On July 1, 2004, a second response to the Notice was submitted which did include replacement drawings. Nonetheless, in response to the response submitted May 28, 2004 which did not include replacement drawings, a Notice of Incomplete Reply was mailed on July 6, 2004. The Notice of Incomplete Reply acknowledged receipt of the response submitted May 28, 2004 and indicated that said response did not include replacement drawings. The Notice of Incomplete Reply indicated that replacement drawings were required. The Notice of Incomplete Reply also indicated that the period of reply to the Notice of Incomplete Reply remained as set forth in the Notice to File Corrected Application Papers mailed May 18, 2004. Petitioner responded to the Notice of Incomplete Reply by submitting an additional set of replacement drawings along with a petition for an extension of time on July 29, 2004. The instant petition was submitted July 30, 2004 wherein petitioner requests a new filing receipt acknowledging the acceptance of the drawing submitted July 29, 2004; alternatively, petitioner requests advisal as to the defect in any drawing found non-compliant; and petitioner requests a refund of the petition fee and extension of time fee submitted.

Petitioner is advised that the drawings submitted July 29, 2004 have been reviewed by the draftperson and found compliant. Thus, the drawings are accepted as the reply required by the Notices

mailed May 18, 2004 and July 6, 2004. The instant petition was submitted under 37 CFR 1.181 and included a petition fee of $130.00. Petitioner is advised that a petition submitted under 37 CFR 1.181 does not require a fee. Accordingly, this petition fee is unnecessary. A refund has been requested from the Finance Office, Refund Section.

Petitioner herein has acknowledged that the drawings submitted July 29, 2004 were submitted in response to the Notices mailed May 18, 2004 and July 6, 2004[1]. The Notice mailed May 18, 2004 required a proper reply within two months from the mail date of the Notice. The Notice indicated that the period of time for reply may be extended upon petition for an extension of time under 37 CFR 1.136(a). The Notice mailed July 6, 2004 indicated that the period of time for reply remained as set forth in the Notice mailed May 18, 2004. Hence, a reply to the Notice was due on or before July 18, 2004. Any reply submitted after July 18, 2004 required an extension of time. A reply was submitted July 1, 2004, prior to the mailing of the Notice of Incomplete Reply on July 8, 2004. Petitioner, however, supplemented the reply filed July 1, 2004 with an additional reply on July 29, 2004. Submission of the reply submitted July 29, 2004 required an extension of time.

Petitioner references telephonic communications with the Office of Initial Patent Examination Division (hereinafter "OIPE"). The Official application file contains no record of the alleged communications. Petitioner's attention is directed to 37 CFR 1.2 wherein it states in pertinent part that "[t]he action of the Patent and Trademark Office will be based exclusively on the written record in the Office. No attention will be paid to any alleged oral promise, stipulation, or understanding in relation to which there is disagreement or doubt." Accordingly, it must be found that the reply submitted July 29, 2004 was supplemental to the reply submitted May 18, 2004, and as such required an extension of time.

Accordingly, petitioner's request for refund of the petition for extension of time fee, said request is **DISMISSED**.

As to petitioner's request for a corrected filing receipt, enclosed herewith is a replacement filing receipt.

As to petitioner's request for acknowledgment of the status of the drawings, as indicated herein, the drawings have been reviewed by the draftsman and found 37 CFR 1.84.

---

[1] See, Footnote 2, page 3 of petition submitted July 29, 2004 wherein it states in pertinent part, "... herein he only addresses the drawing sheets submitted July 29, 2004."

Any request for reconsideration of this decision must be submitted within **TWO (2) MONTHS** from mail date of this decision. Extensions of time under 37 CFR 1.136(a) are permitted. The reconsideration request should include a cover letter entitled "Renewed Petition under 37 CFR 1.181."

Further correspondence with respect to this matter should be addressed as follows:

By mail:	**Mail Stop Petition** Commissioner for Patents P.O. Box 1450 Alexandria, VA 22313-1450
By facsimile:	(703) 872-9306
By hand delivery or courier service(FedEx, UPS, DHL, etc.):	U.S. Patent and Trademark Office 2011 South Clark Place Customer Window, **Mail Stop Petition** Crystal Plaza Two, Lobby, Room 1B03

This application is being forwarded to the Office of Initial Patent Examination for further processing.

Telephone inquiries regarding this decision should be directed to the undersigned at (571) 272-3205.

Alesia M. Brown
Petitions Attorney
Office of Petitions

Enclosure: Replacement Filing Receipt

UNITED STATES PATENT AND TRADEMARK OFFICE

COMMISSIONER FOR PATENTS
UNITED STATES PATENT AND TRADEMARK OFFICE
P.O. BOX 1450
ALEXANDRIA, VA 22313-1450
www.uspto.gov

LAW OFFICE OF ADRIENNE B. NAUMANN
8210 NORTH TRIPP
SKOKIE, IL 60076

COPY MAILED

SEP 2 8 2005

OFFICE OF PETITIONS

In re Application of :
Shaw : DECISION ON PETITION
Application No. 10/787,723 :
Filed: February 26, 2004 :
For: ELECTROMAGNETIC INTEGRATIVE :
DOOR LOCKING DEVICE :

This is a decision on the renewed petition under 37 CFR 1.181, filed April 21, 2005.

The petition is hereby **DISMISSED**.

Petitioner herein request amendment of the decision mailed March 16, 2005 to reflect that "Applicant complied with 37 C.F.R. 1.2." Petitioner seeks to have the Office acknowledge telephonic communications allegedly held between petitioner and employees of the USPTO.

The USPTO **does not** conduct official USPTO business telephonically. Accordingly, to the extent any such telephonic communications may have occurred, such telephonic communications would have no effect on the decision on petition mailed March 16, 2005. Furthermore, as previously indicated, as set forth at 37 CFR 1.2, "[t]he action of the Patent and Trademark Office will be based exclusively on the written record in the Office. No attention will be paid to any alleged oral promise, stipulation, or understanding in relation to which there is disagreement or doubt." The official USPTO record for the above-identified record does not reflect the communications referenced by petitioner. Accordingly, petitioner's request to corrected decision is without merit.

The application is being forwarded to the Technology Center 3600 for further processing.

Telephone inquiries concerning this matter may be directed to the undersigned at (571) 272-3205.

Alesia M. Brown
Petitions Attorney
Office of Petitions

UNITED STATES PATENT AND TRADEMARK OFFICE

Commissioner for Patents
United States Patent and Trademark Office
P.O. Box 1450
Alexandria, VA 22313-1450
www.uspto.gov

Patent No. : 7,274,330 B2
Serial No. : 10/787,725
Inventor(s) : Lee
Issued : September 25, 2007
Title : **BEAM SWITCHING ANTENNA SYSTEM AND METHOD AND APPARATUS FOR CONTROLLING THE SAME**
Docket No. : **2080-3233**

Re: Request for Reconsideration

Consideration has been given your request for the issuance of a certificate of correction for the above-identified patent under the provisions of 37 CFR 1.322 and/or 1.323.

A petition under 37 CFR 3.81 must be filed and granted to fulfill your request, to date, there is no petition on record to consider your request to add Assignee.

Furthermore, Assignees' and/ or Co-assignees' names and addresses (assignment data) printed in a patent are based *solely* on information supplied in the appropriate space for identifying the assignment data, i.e., item 3 of the Fee(s) Transmittal Form PTOL-85B. After payment of the issue fee, correction of assignment data submitted on the PTOL-85B can only be done by Certificate of Correction under 37 CFR 1.323, which requires petition under 37 CFR 3.81(b).

A request for a patent to be corrected to state the name of the assignee must:

A. state that the assignment was submitted for recordation as set forth in 37 CFR 3.11 before issuance of the patent;
B. include a request for a certificate of correction under 37 CFR 1.323 along with the fee set forth in 37 CFR 1.20(a); and
C. include the processing fee set forth in 37 CFR 1.17(i).

If the request is granted, Certificates of Correction Branch will be notified that a Certificate of Correction may be issued.
See Manual of Patent Examining Procedure, Section 1481.01 (Rev. 3) (Oct. 2005).

Applicant has not included items B and or C above, accordingly, the request for Certificate of Correction to add or change the assignee data is dismissed.
Any request under 37 CFR 3.81(b) should be directed to the following address or facsimile number:

By mail: Mail Stop PETITIONS
Commissioner for Patents
Post Office Box 1450
Alexandria, VA 22313-1450

By hand: Customer Service Window
Mail Stop Petitions
Randolph Building
401 Dulany Street
Alexandria, VA 22314

By fax: 571-273-8300 ATTN: Office of Petitions

If, the petition under 37 CFR 1.182 (required fee currently $130), is filed and granted, the patentee would be entitled to a certificate of correction under 37 CFR 1.323 (required fee currently $100), which has been received.

Ernest C. White, *LIE*
For Mary F. Diggs (703) 308-9390 x 125
Decisions & Certificates
of Correction Branch
(703) **308-9390 x 122**

LEE, HONG, DEGERMAN, KANG & WAIMEY
660 S. FIGUEROA STREET
Suite 2300
LOS ANGELES CA 90017

ecw

UNITED STATES PATENT AND TRADEMARK OFFICE

OFFICE

COPY MAILED

JAN 31,2007

Director's Office
Office of Patent Publication

ROBERTS, MLOTKOWSKI & HOBBES
P. O. BOX 10064
MCLEAN VA 22102-8064

In re Application of :
MUELLER, HANS-PETER et al :
Application No. 10/787,762 :
Filed: February 27, 2004 :
Attorney Docket No. 740116-505 :

DECISION ON PETITION

This is a decision on the Petition To Revive Application Abandoned by USPTO Error under 37CFR 1.181, received in the United States Patent & Trademark Office (USPTO) on May 22, 2006.

The petition is **DISMISSED**. Any request for reconsideration of this decision, or as explained below, filing a petition seeking revival under 37 CFR § 1.137, must be filed within TWO (2) MONTHS from the mail date of this decision.

The above-identified application was held abandoned for applicant's failure to timely pay the issue fee, as required in the Notice of Allowance and Fee(s) Due mailed December 20, 2005. The Notice of Abandonment, mailed on April 26, 2006 indicates, "The submitted fee of $300 is insufficient. A balance of $1,400 is due for. The issue fee required by 37 CFR 1.18 is $1,400. The publication fee, if required by 37 CFR 1.18(d) is $300."

The Office acknowledges receipt of Part B – Fee(s) Transmittal on March 20, 2006, authorizing that the Issue Fee be charged to Deposit Account No. 50-2478. On March 20, 2006, when an attempt was made by the Office of Finance to charge the fees, there were insufficient funds in the Deposit Account.

37 CFR 1.25 (a) and (b), which states in part:

> 1.25(a) ...An amount sufficient to cover all fee, services, copies, etc., requested must always be on deposit. Charges to accounts with insufficient funds will not be accepted."
>
> 1.25 (b) ...An authorization to charge a fee to a deposit account will not be considered payment of the fee on the date the authorization to charge the fee is effective as to the particular fee to be charged unless sufficient funds are present in the account to cover the fee.

In light of the non-compliance with 37 CFR 1.25, the holding of abandonment cannot be withdrawn.

Applicant may seek relief by filing a petition for Revival of Abandoned Application under CFR § 1.137 (a) or (b). (Forms are available at USPTO website http://www.uspto.gov)

- Under 37 CFR 1.137(a), a petition for the revival of an ***unavoidable*** abandoned application
- Under 37 CFR 1.137(b), a petition for the revival of an ***unintentionally*** abandoned application

Further inquires with respect to filing a petition under 37 CFR § 1.137 may be directed to the Office of Petitions at 571-272-3282 or addressed as follows:

By mail: Mail Stop Petitions
Commissioner for Patents
Office of Petitions
P O Box 1450
Alexandria, VA 22313-1450

Telephone inquires concerning this decision matter may be directed to the undersigned at 703 308-9250 Ext. 163.

Nina Motley

Nina D. Motley
Quality Operations Assistant
Office of the Director
Office of Patent Publications

UNITED STATES PATENT AND TRADEMARK OFFICE

Commissioner for Patents
United States Patent and Trademark Office
P.O. Box 1450
Alexandria, VA 22313-1450
www.uspto.gov

Paper No.

ROBERTS, MLOTKOWSKI & HOBBES
P. O. BOX 10064
MCLEAN VA 22102-8064

COPY MAILED

MAY 31 2007

OFFICE OF PETITIONS

In re Application of :
Mueller et al. : DECISION ON PETITION
Application No. 10/787,762 :
Filed: February 27, 2004 :
Atty Docket No. 740116-505 :

This is in response to the PETITION 1.137(a) TO REVIVE APPLICATION filed February 23, 2007. Alternatively, applicants request that if revival under 37 CFR § 1.137(a) not be found to exist, then this Petition should then be treated as a petition under 37 CFR § 1.137(b).

The petition under § 1.137(a) is **DISMISSED**.

The petition under § 1.137(b) is **GRANTED**.

The application became abandoned for failure to timely pay the issue fee within the statutory period of three months from the mailing date of the Notice of Allowance mailed December 20, 2005. An authorization to charge the $300 publication fee and $1400 issue fee to a Deposit Account was received on March 20, 2006. However, when presented, the $300 fee was charged but the Deposit Account was found insufficient to pay the $1400 issue fee. No further reply received and no extension of time obtainable, the application became abandoned effective March 21, 2006. A courtesy Notice of Abandonment was mailed on April 26, 2006.

By decision mailed January 31, 2007, a prior petition to withdraw the holding of abandonment filed May 22, 2006 was

dismissed. It was determined that the abandonment was not due to an error by the USPTO in failing to apply the $1400 Issue Fee against the available funds in the Deposit Account.

Applicants replied with the instant petition, requesting acceptance of the issue fee based on unavoidable delay.

Consideration of petition under 37 CFR 1.137(a)

35 U.S.C. 151 provides, in pertinent part, that:

> If any payment required by this section is not timely made, but is submitted with the fee for delayed payment and the delay in payment is shown to have been unavoidable, it may be accepted by the Director as though no abandonment or lapse had ever occurred.

Pursuant to 37 CFR 1.137(a), a grantable petition to revive an unavoidably abandoned application must be accompanied by:

> (1) the reply required to the outstanding Office action or notice, unless previously filed;
> (2) the petition fee set forth in 37 CFR 1.17(l);
> (3) a showing to the satisfaction of the Director that the entire delay in filing the required reply from the due date for the reply until the filing of a grantable petition pursuant to this paragraph was unavoidable; and
> (4) any terminal disclaimer (and fee as set forth in § 1.20(d)) required pursuant to § 1.137(d).

The petition included the required reply[1] in the form of payment of the issue fee and payment of the petition fee. This utility application was filed after June 8, 1995, and thus, no terminal disclaimer is required. Requirement (3) is at issue in this case.

The burden of showing the cause of the delay is on the person seeking to revive the application. Smith v. Mossinghoff, 671 F.2d 533, 538, 213 U.S.P.Q. 977, 982 (D.C. Cir. 1982). Decisions on reviving abandoned applications on the basis of

[1] The publication fee was timely paid. There was no distinct but concurrent requirement for new drawings

"unavoidable" delay have adopted the "reasonably prudent person standard" in determining if the delay was unavoidable:

> The word 'unavoidable' ... is applicable to ordinary human affairs, and requires no more or greater care or diligence than is generally used and observed by prudent and careful men in relation to their most important business. It permits them in the exercise of this care to rely upon the ordinary and trustworthy agencies of mail and telegraph, worthy and reliable employees, and such other means and instrumentalities as are usually employed in such important business. If unexpectedly, or through the unforeseen fault or imperfection of these agencies and instrumentalities, there occurs a failure, it may properly be said to be unavoidable, all other conditions of promptness in its rectification being present.

In re Mattullath, 38 App. D.C. 497, 514-15 (1912)(quoting Ex parte Pratt, 1887 Dec. Comm'r Pat. 31, 32-33 (1887)); see also Winkler v. Ladd, 221 F. Supp. 550, 552, 138 U.S.P.Q. 666, 167-68 (D.D.C. 1963), aff'd, 143 U.S.P.Q. 172 (D.C. Cir. 1963); Ex parte Henrich, 1913 Dec. Comm'r Pat. 139, 141 (1913). In addition, decisions on revival are made on a "case-by-case basis, taking all the facts and circumstances into account." Smith, 671 F.2d at 538, 213 U.S.P.Q. at 982. Nonetheless, a petition cannot be granted where a petitioner has failed to meet his or her burden of establishing that the entire delay was "unavoidable." Haines v. Quigg, 673 F. Supp. 314, 316-17, 5 U.S.P.Q.2d 1130, 1131-32 (N.D. Ind. 1987).

Petitioner argues that the delay was unavoidable "since the information made available by the USPTO indicated that sufficient fees to cover the issue fee for the above-identified application were available in the Deposit Account of applicants' representative." In support thereof, applicants submit a copy of their Monthly Statement dated March 31, 2006. Applicants argue that their representative had no way of knowing that the information in the USPTO records were incorrect at the time that the payment was authorized and that insufficient funds were in their Deposit Account. Thus, applicants submit that the error on the Office's part made the failure to have sufficient funds to cover the $1400 Issue Fee in the Deposit Account unavoidable.

Petitioner's explanation has been considered, but not found adequate to meet the burden of showing that the delay was unavoidable. Petitioner's evidence does not support a conclusion that they exercised the diligence generally used and observed by prudent and careful men in relation to their most important business. As stated on the Monthly Statement of Deposit Account, an amount sufficient to cover all services requested must always be on deposit. A prudent and careful man in relation to his most important business would ensure that his Deposit Account had sufficient funds in it to pay the required fees. Care must be taken given that funds are clearly drawn from this Account for multiple matters. Petitioner does not show that they took action to ensure that when presented their Deposit Account would have sufficient funds to pay both the issue fee and the publication fee with respect to this matter.

Petitioner suggests that they relied on the USPTO's advisement of the amount in their Deposit Account. Such reliance is not demonstrative of the level of diligence required. At any given moment, the amount in a Deposit Account in USPTO records can change based on an authorization in any number of matters associated with that Deposit Account. The best record of the amount available in a Deposit Account is the record of the Deposit Account holder, if such are properly maintained.

Petitioner provides a copy of a Deposit Account statement dated March 31, 2006, to explain their actions of March 20, 2006. That is like relying on a Bank Statement dated March 31, 2006 to explain writing an insufficient check on March 20, 2006. A prudent and careful man would rely on his own contemporaneous records of his Deposit Account (or his check register) before authorizing a charge to that Deposit Account (or writing a check).

Moreover, the Monthly Statement of Deposit Account does not show that the Office erred in concluding that funds were insufficient to pay the issue fee of $1400. As shown in the image file wrapper for this application, after the publication fee was paid, the Deposit Account balance was only $601. This record printed at the time of the attempt to collect the fee is the most correct record of the funds available at that time. The Monthly Statement of Deposit Account includes the later received replenishment of $5000 in the balance of March 21, 2006. However, as shown by the printed finance record, the replenishment was not available in the Deposit Account when the

issue fee transmittal was processed. Petitioner did not make an amount sufficient to cover payment of the issue fee on deposit until after payment of the fee was presented.

In view thereof, it is concluded that petitioner has failed to establish to the satisfaction of the Director that the delay in payment of the issue fee was unavoidable within the meaning of § 1.137(a).

Consideration of petition under 37 CFR 1.137(b)

Nonetheless, petitioner has met the requirements for revival of the application based on unintentional delay. The petition included the required reply in the form of payment of the issue fee; payment of the petition fee set forth in 37 CFR § 1.17(m); and the required statement of unintentional delay. No terminal disclaimer is required.

The Office of Patent Publication has been advised of this decision.

Telephone inquiries related to this decision should be directed to the undersigned at (571) 272-3219.

Nancy Johnson
Senior Petitions Attorney
Office of Petitions

OIPE
DEC 2 3 2005
PATENT & TRADEMARK OFFICE

PTO/SB/83 (04-05)
Approved for use through 11/30/2005. OMB 0651-0035
U.S. Patent and Trademark Office, U.S. DEPARTMENT OF COMMERCE
Under the Paperwork Reduction Act of 1995, no persons are required to respond to a collection of information unless it displays a valid OMB control number.

REQUEST FOR WITHDRAWAL AS ATTORNEY OR AGENT AND CHANGE OF CORRESPONDENCE ADDRESS

Application Number	10/787,776
Filing Date	02/26/2004
First Named Inventor	Philip M. Cantrell
Art Unit	3637
Examiner Name	TBA
Attorney Docket Number	04136/S

2/21/06
APPROVED

To: Commissioner for Patents
P.O. Box 1450
Alexandria, VA 22313-1450

Please withdraw me as attorney or agent for the above identified patent application, and

☐ all the attorneys/agents of record.

☐ the attorneys/agents (with registration numbers) listed on the attached paper(s), or

☐ the attorneys/agents associated with Customer Number ☐

NOTE: This box can only be checked when the power of attorney of record in the application is to all the practitioners associated with a customer number.

The reasons for this request are: 37 CFR 10.40(c) (iv) and (vi) - unreasonably difficult for the practitioner to carry out the employment effectively and refusal to pay his bill for more than nine months. To the best of undersigned counsel's knowledge, there are no outstanding official actions or other correspondence on this application at this writing.

CORRESPONDENCE ADDRESS

1. ☐ The correspondence address is NOT affected by this withdrawal.
2. ☑ Change the correspondence address and direct all future correspondence to:

☐ The address associated with Customer Number: ☐

OR

☑ Firm *or* Individual Name	Mr. Philip M. Cantrell				
Address	1121 Clower Road				
City	Morven	State	Georgia	Zip	31638
Country	USA				
Telephone	229-775-2537	Email			
Signature	John P. Sinnott				
Name	John P. Sinnott	Registration No.	21,001		
Date	December 20, 2005	Telephone No.	229-244-5400		

NOTE: Withdrawal is effective when approved rather than when received. Unless there are at least 30 days between approval of withdrawal and the expiration date of a time period for response or possible extension period, the request to withdraw is normally disapproved.

This collection of information is required by 37 CFR 1.36. The information is required to obtain or retain a benefit by the public which is to file (and by the USPTO to process) an application. Confidentiality is governed by 35 U.S.C. 122 and 37 CFR 1.11 and 1.14. This collection is estimated to take 12 minutes to complete, including gathering, preparing, and submitting the completed application form to the USPTO. Time will vary depending upon the individual case. Any comments on the amount of time you require to complete this form and/or suggestions for reducing this burden, should be sent to the Chief Information Officer, U.S. Patent and Trademark Office, U.S. Department of Commerce, P.O. Box 1450, Alexandria, VA 22313-1450. DO NOT SEND FEES OR COMPLETED FORMS TO THIS ADDRESS. SEND TO: **Commissioner for Patents, P.O. Box 1450, Alexandria, VA 22313-1450.**

If you need assistance in completing the form, call 1-800-PTO-9199 and select option 2.

OIPE
DEC 23 2005
PATENT & TRADEMARK OFFICE

IN THE UNITED STATES PATENT AND TRADEMARK OFFICE

Applicant: Philip M. Cantrell **Examiner:** TBA

Application No.: 10/787,776

Filing Date: February 26, 2004 **Art Unit:** 3637

For: Archway and Archway Construction

CERTIFICATE OF 1ST CLASS MAILING

Date of Deposit: December 20, 2005

I hereby certify that the following attached paper(s) and/or fee(s)

1. Certificate of 1st Class Mailing;
2. Request for Withdrawal; and
3. Return Postcard

are being deposited with the United States Postal Service "1st Class Mail Post Office to Addressee" service under 37 C.F.R. §1.10 on the date indicated above and is addressed to Commissioner of Patents and Trademarks; P.O. Box 1450; Alexandria, VA 22313-1450.

VICTORIA INGRAM
(Typed or printed name of person mailing paper(s) and/or fee)

Victoria Ingram
(Signature of person mailing paper(s) and/or fee)

Correspondence Address:
Langdale & Vallotton, LLP
Post Office Box 1547
1007 North Patterson Street
Valdosta, GA 31603-1547
P:(229) 244-5400
F:(229) 244-5475

DEC 29 2005
MAR 27 2006
PATENT & TRADEMARK OFFICE

PTO/SB/83 (04-05)
Approved for use through 11/30/2005. OMB 0651-0035
U.S. Patent and Trademark Office, U.S. DEPARTMENT OF COMMERCE
Under the Paperwork Reduction Act of 1995, no persons are required to respond to a collection of information unless it displays a valid OMB control number.

REQUEST FOR WITHDRAWAL AS ATTORNEY OR AGENT AND CHANGE OF CORRESPONDENCE ADDRESS

Application Number	10/787,776
Filing Date	02/26/2004
First Named Inventor	Philip M. Cantrell
Art Unit	3637
Examiner Name	TBA
Attorney Docket Number	04136/S

2/21/06

APPROVED

To: Commissioner for Patents
P.O. Box 1450
Alexandria, VA 22313-1450

Please withdraw me as attorney or agent for the above identified patent application, and

☐ all the attorneys/agents of record.

☐ the attorneys/agents (with registration numbers) listed on the attached paper(s), or

☐ the attorneys/agents associated with Customer Number ☐

NOTE: This box can only be checked when the power of attorney of record in the application is to all the practitioners associated with a customer number.

The reasons for this request are: 37 CFR 10.40(c) (iv) and (vi) - unreasonably difficult for the practitioner to carry out the employment effectively and refusal to pay his bill for more than nine months. To the best of undersigned counsel's knowledge, there are no outstanding official actions or other correspondence on this application at this writing.

CORRESPONDENCE ADDRESS

1. ☐ The correspondence address is NOT affected by this withdrawal.
2. ☑ Change the correspondence address and direct all future correspondence to:

☐ The address associated with Customer Number: ☐

OR

☑ Firm or Individual Name	Mr. Philip M. Cantrell				
Address	1121 Clower Road				
City	Morven	State	Georgia	Zip	31638
Country	USA				
Telephone	229-775-2537	Email			
Signature	John P. Sinnott				
Name	John P. Sinnott	Registration No.	21,001		
Date	December 20, 2005	Telephone No.	229-244-5400		

NOTE: Withdrawal is effective when approved rather than when received. Unless there are at least 30 days between approval of withdrawal and the expiration date of a time period for response or possible extension period, the request to withdraw is normally disapproved.

This collection of information is required by 37 CFR 1.36. The information is required to obtain or retain a benefit by the public which is to file (and by the USPTO to process) an application. Confidentiality is governed by 35 U.S.C. 122 and 37 CFR 1.11 and 1.14. This collection is estimated to take 12 minutes to complete, including gathering, preparing, and submitting the completed application form to the USPTO. Time will vary depending upon the individual case. Any comments on the amount of time you require to complete this form and/or suggestions for reducing this burden, should be sent to the Chief Information Officer, U.S. Patent and Trademark Office, U.S. Department of Commerce, P.O. Box 1450, Alexandria, VA 22313-1450. DO NOT SEND FEES OR COMPLETED FORMS TO THIS ADDRESS. SEND TO: **Commissioner for Patents, P.O. Box 1450, Alexandria, VA 22313-1450.**

If you need assistance in completing the form, call 1-800-PTO-9199 and select option 2.

OIPE 1600
MAR 27 2006
PATENT & TRADEMARK OFFICE

IN THE UNITED STATES PATENT AND TRADEMARK OFFICE

Applicant:	**Philip M. Cantrell**	**Art Unit:**	**3637**
Serial No.:	**10/787,776**	**Examiner:**	**A, Phi Dieu Tran**
Filed:	**February 26, 2004**		
For:	**Archway and Archway Construction**		

Honorable Commissioner of Patents and Trademarks
Post Office Box 1450
Alexandria, VA 22313-1450

Re: Correspondence Address Correction

Sir:

The enclosed Official Action mailed from the Patent and Trademark Office was addressed to the undersigned.

Kindly note that the undersigned's request to withdraw as attorney for the applicant was approved on February 21, 2006 (copy enclosed), which was before the mailing date for the instant Official Action. Please remove the undersigned from mailings this case.

Thank you so very much for your kind consideration.

Respectfully submitted,

LANGDALE & VALLOTTON, LLP

JOHN P. SINNOTT
Registration No. 21,001

March 21, 2006
P.O. Box 1547
1007 N. Patterson Street
Valdosta, GA 31603-1547
P:(229) 244-5400
F:(229) 244-5475

OIPE
MAR 27 2006
PATENT & TRADEMARK OFFICE

Ifld

IN THE UNITED STATES PATENT AND TRADEMARK OFFICE

Applicant: **Philip M. Cantrell** **Examiner:** **A, Phi Dieu Tran**

Application No.: **10/787,776**

Filing Date: **February 26, 2004** **Art Unit:** **3637**

For: **Archway and Archway Construction**

CERTIFICATE OF 1ST CLASS MAILING

Date of Deposit: March 21, 2006

I hereby certify that the following attached paper(s) and/or fee(s)

1. Certificate of 1st Class Mailing;
2. Correspondence address correction; and
3. Return Postcard

are being deposited with the United States Postal Service "1st Class Mail Post Office to Addressee" service under 37 C.F.R. §1.10 on the date indicated above and is addressed to Commissioner of Patents and Trademarks; P.O. Box 1450; Alexandria, VA 22313-1450.

VICTORIA INGRAM
(Typed or printed name of person mailing paper(s) and/or fee)

Victoria A

(Signature of person mailing paper(s) and/or fee)

Correspondence Address:
Langdale & Vallotton, LLP
Post Office Box 1547
1007 North Patterson Street
Valdosta, GA 31603-1547
P:(229) 244-5400
F:(229) 244-5475

UNITED STATES PATENT AND TRADEMARK OFFICE

UNITED STATES DEPARTMENT OF COMMERCE
United States Patent and Trademark Office
Address: COMMISSIONER FOR PATENTS
P.O. Box 1450
Alexandria, Virginia 22313-1450
www.uspto.gov

ADVANCED MICRO DEVICES, INC.
C/O VEDDER PRICE P.C.
222 N.LASALLE STREET
CHICAGO, IL 60601

Mail Date: 06/28/2010

Applicant	: Peter Bandas	: DECISION ON REQUEST FOR
Patent Number	: 7624123	: RECALCULATION of PATENT
Issue Date	: 11/24/2009	: TERM ADJUSTMENT IN VIEW
Application No	: 10/787,780	: OF WYETH AND NOTICE OF INTENT TO
Filed	: 02/26/2004	: ISSUE CERTIFICATE OF CORRECTION
		:

The Request for Recalculation is **GRANTED** to the extent indicated.

The patent term adjustment has been determined to be **784** days. The USPTO will *sua sponte* issue a certificate of correction reflecting the amount of PTA days determined by the recalculation.

Prior to the issuance of the certificate of correction, the USPTO will afford patentee an opportunity to be heard and request reconsideration. Accordingly, patentee has **one month or thirty (30) days**, whichever is longer, to file a request for reconsideration of this patent term adjustment calculation. See 35 U.S.C. 154(b)(3)(B)(ii) and 37 CFR 1.322(a)(4). No extensions of time will be granted under 37 CFR 1.136.

Patentee should use document code PET.OP if electronically filing a request for reconsideration of this patent term adjustment calculation. The patentee must also include the information required by 37 CFR 1.705(b)(2) and the fee required by 37 CFR 1.18(e). If patentee does not file a timely request for reconsideration of this patent term adjustment calculation including the information required by 37 CFR 1.705(b)(2) and the fee required by 37 CFR 1.18(e), the USPTO will issue a certificate of correction reflecting the PTA determination noted above.

Patentee should be aware that in order to preserve the right to review in the United States District Court for the District of Columbia of the USPTO patent term adjustment determination, patentee must ensure that he or she also take the steps required under 35 U.S.C. 154(b)(4)(A) in a timely manner. Nothing in the request for recalculation should be construed as providing an alternative time frame for commencing a civil action under 35 U.S.C. 154(b)(4)(A).

Any questions concerning this decision should be directed to the Office of Patent Legal Administration at 571-272-7702.

UNITED STATES PATENT AND TRADEMARK OFFICE

Commissioner for Patents
United States Patent and Trademark Office
P.O. Box 1450
Alexandria, VA 22313-1450
www.uspto.gov
DIW Dec-07

DOCKET CLERK
PO BOX 12608
DALLAS TX 75225

COPY MAILED

DEC 26 2007

OFFICE OF PETITIONS

In re Application of :
Sherryl Lee Lorraine Scott : DECISION ON PETITION
Application Number: 10/787783 :
Filing Date: 02/26/2004 :
Attorney Docket Number: :
1578.314 (11294-US-PAT) :

This is a decision in reference to the "REQUEST TO WITHDRAW HOLDING OF ABANDONMENT," filed on November 20, 2007, which is treated as a petition under 37 CFR 1.181 to withdraw the holding of abandonment.

The petition is **GRANTED**.

The application became abandoned on February 17, 2007, for failure to timely submit a reply to the non-final Office action mailed on November 16, 2006, which set a three (3)-month shortened statutory period for reply. Notice of Abandonment was mailed on September 21, 2007.

Petitioners assert that a Change of Correspondence Address was filed on October 27, 2006, but that the non-final Office action mailed on November 16, 2006, was subsequently mailed to the previous address of record due to Office error.

A review of the official record reveals on October 27, 2006, a revocation and power of attorney and change of correspondence address was filed, changing the power of attorney and correspondence address to those associated with Customer No. 44208. The revocation and power of attorney and change of correspondence address, however, was not accepted and entered into Office records until November 17, 2006. Furthermore, the Office action mailed on November 16, 2007, was mailed to the prior address of record.

As such, the showing of record is that the Office erred in mailing the Office action mailed on November 16, 2006, to the previous address rather than the current correspondence address. As the error in mailing is due to an Office error, it is

appropriate to remail the non-final Office action mailed on November 16, 2006, to the current correspondence address.

As such, there is no abandonment in fact. The holding of abandonment is withdrawn, and the Notice of Abandonment is vacated.

The Office apologizes for any inconvenience to petitioner.

The application is referred to the Technology Center Technical Support Staff for remailing of the non-final Office action mailed on November 16, 2006. The time period for reply to the Office action will be reset to run from the date the Office action is remailed.

Telephone inquiries concerning this matter may be directed to the undersigned at (571)272-3231.

DWood

Douglas I. Wood
Senior Petitions Attorney
Office of Petitions

UNITED STATES PATENT AND TRADEMARK OFFICE

Commissioner for Patents
United States Patent and Trademark Office
P.O. Box 1450
Alexandria, VA 22313-1450
www.uspto.gov

DOCKET CLERK
PO BOX 12608
DALLAS TX 75225

COPY MAILED

SEP 24 2008

In re Application of :
Hardy et al. :
Application No. 10/787785 :
Filing or 371(c) Date: 02/26/2004 : ON PETITION
Title of Invention: :
EXPEDITED COMMUNICATION KEY :
SYSTEM AND METHOD :

This is a decision on the Request to Consider Amendment as Timely Filed and, in the Alternative, to Revive Unavoidably Abandoned Patent Application, filed September 8, 2008. The petition is properly treated under 37 CFR 1.137(a).

This Petition is hereby **dismissed**.

Any further petition to revive the above-identified application must be submitted within TWO (2) MONTHS from the mail date of this decision. Extensions of time under 37 CFR 1.136(a) are permitted. The reconsideration request should include a cover letter entitled "Request for Reconsideration of Petition under [insert the applicable code section]". This is **not** final agency action within the meaning of 5 U.S.C. § 704.

Background

The above-identified application became abandoned for failure to timely and properly reply to the non-final Office action, mailed January 28, 2008. The Office action set a three (3) month period for reply from the mail date of the Office action. Extensions of time were available under 37 CFR 1.136(a). No reply having been received, the application became abandoned on April 29, 2008. The mailing of this Decision precedes the mailing of a Notice of Abandonment.

The present petition

Applicant files the present petition and requests entry of the amendment filed with the present petition, or alternatively petitions to revive the application based upon unavoidable delay in filing the reply to the Office action. In support of the request/petition, Applicant asserts that the

Office action was not delivered to Applicant, and that Applicant learned of the Office action in a phone call from the Examiner on or about August 27, 2008.

Applicant avers that the Examiner relayed to the Applicant that while the Office action was mailed to the correspondence address of record, it was returned to this Office by the United States Postal Service as undeliverable.

Applicant asserts that the correspondence address to which the Office action was mailed was, and remains the proper correspondence address.

Applicable Law Rules and MPEP

The applicable statute, 35 U.S.C. § 133, Time for prosecuting application, states

> Upon failure of the applicant to prosecute the application within six months after any action therein, of which notice has been given or mailed to the applicant, or within such shorter time, not less than thirty days, as fixed by the Director in such action, the application shall be regarded as abandoned by the parties thereto, unless it be shown to the satisfaction of the Director that such delay was unavoidable.

Abandonment takes place by operation of law for failure to reply to an Office action or timely pay the issue fee, not by operation of the mailing of a Notice of Abandonment. See Lorenz v. Finkl, 333 F.2d 885, 889-90, 142 USPQ 26, 29-30 (CCPA 1964); Krahn v. Commissioner, 15 USPQ2d 1823, 1824 (E.D. Va 1990); In re Application of Fischer, 6 USPQ2d 1573, 1574 (Comm'r Pat. 1988).

It is well settled that the use of "shall" in a statute is the language of command, and where the directions of a statute are mandatory, strict compliance with the statutory terms is essential. Farrel Corp. v. U.S. Int'l Trade Comm'n, 942 F.2d 1147, 20 USPQ2d 1912 (Fed. Cir. 1991).

This section of the statute is further clarified in Office rule 37 CFR § 1.135, Abandonment for failure to reply within time period, which states

> (a) If an applicant of a patent application fails to reply within the time period provided under § 1.134 and § 1.136, the application will become abandoned unless an Office action indicates otherwise.

This section explains that a failure to timely reply to an Office action will result in the abandonment of the application.

In view of the above, Applicant is advised that this Office has no authority to accept the amendment as timely filed.

The petition to revive the application under 37 CFR 1.137(a)

A grantable petition to revive an abandoned application under 37 CFR 1.137(a) must be accompanied by: (**1**) the required reply (unless previously filed), which may met by the filing of a notice of appeal and the requisite fee; a continuing application; an amendment or request for reconsideration which *prima facie* places the application in condition for allowance, or a first or second submission under 37 CFR 1.129(a) if the application has been pending for at least two years as of June 8, 1995, taking into account any reference made in such application to any earlier filed application under 35 USC 120, 121 and 365(c); (**2**) the petition fee as set forth in 37 CFR 1.17(l); (**3**) a showing to the satisfaction of the Director that the entire delay in filing the required reply from the due date for the reply until the filing of a grantable petition pursuant to 37 CFR 1.137(a) was unavoidable; and (**4**) any terminal disclaimer (and fee as set forth in 37 CFR 1.20(d)) required pursuant to 37 CFR 1.137(c). Applicant lacks item (**3**).

As to item (**3**), a showing of non-receipt of an Office communication may form the basis for revival of an application based upon unavoidable delay.

Applicable Law, Rules and MPEP

The MPEP 711.03(c)A, provides in relevant part:

The showing required to establish nonreceipt of an Office communication must include

> (1) a statement from the practitioner stating that the Office communication was not received by the practitioner
>
> (2) a statement from the practitioner describing the system used for recording an Office action received at the correspondence address of record with the USPTO. The statement should establish that the docketing system is sufficiently reliable. It is expected that the record would include, but not be limited to, the application number, attorney docket number, the mail date of the Office action and the due date for the response.
>
> Practitioner must state that the Office action was not received at the correspondence address of record, and that a search of the practitioner's record(s), including any file jacket or the equivalent, and the application contents, indicates that the Office action was not received.
>
> (3) a copy of the record(s) used by the practitioner where the non-received Office action would have been entered had it been received is required. A copy of the practitioner's record(s) required to show non-receipt of the Office action should include the master docket for the firm. That is, if a three month period for reply was set in the nonreceived Office action, a copy of the master docket report showing all replies docketed for a date three months from the mail date of the nonreceived Office action must be submitted as documentary proof of nonreceipt

of the Office action. If no such master docket exists, the practitioner should so state and provide other evidence such as, but not limited to, the following: the application file jacket; incoming mail log; calendar; reminder system; or the individual docket record for the application in question.

Applicant is advised, and the MPEP cautions, that the showing outlined above may not be sufficient if there are circumstances that point to a conclusion that the Office action may have been lost after receipt rather than a conclusion that the Office action was lost in the mail (e.g., if the practitioner has a history of not receiving Office actions).

MPEP 711.03(c)

Analysis

Applicant has failed to demonstrate that the Office action was not received. In addition to the statement from Applicant attesting to non-receipt of the Office action, and describing the system used for recording an Office action, Applicant must supply a copy of the record(s) used by the Applicant where the nonreceived Office action would have been entered had it been received and docketed. A copy of the master docket report showing all replies docketed for a date three months from the mail date of the nonreceived Office action, or if no such master docket record exists, a copy of the application file jacket; incoming mail log; calendar; reminder system; or the individual docket record for the application in question, is required.

It is also noted that the correspondence address on the petition differs from the correspondence address of record (Docket Clerk, PO Box 12608, Dallas, TX). Applicant is advised that any statement that the Office action was not received at the correspondence address of record must be from a person with firsthand knowledge of the facts alleged. For instance, if there is a person who oversees the docketing of incoming correspondence from this Office, the statement of nonreceipt should be from that person.

Conclusion

The petition is dismissed without prejudice. Applicant should file a Request for Reconsideration of Petition and include the necessary statements and/or copies of docket records and file jacket.

Further correspondence with respect to this matter should be addressed as follows:

By mail: Director for Patents
PO Box 1450
Alexandria, VA 22313-1450

By FAX: (571) 273-8300
Attn: Office of Petitions

By hand: Customer Service Window
Randolph Building
401 Dulany Street
Alexandria, VA 22314

Telephone inquiries concerning this matter should be directed to the undersigned at (571) 272-3232.

/Derek L. Woods/
Derek L. Woods
Attorney
Office of Petitions

UNITED STATES PATENT AND TRADEMARK OFFICE

Commissioner for Patents
United States Patent and Trademark Office
P.O. Box 1450
Alexandria, VA 22313-1450
www.uspto.gov

DOCKET CLERK
PO BOX 12608
DALLAS TX 75225

COPY MAILED

DEC 19 2008

OFFICE OF PETITIONS

In re Application of	:	
Hardy et al.	:	
Application No. 10/787785	:	
Filing or 371(c) Date: 02/26/2004	:	ON PETITION
Title of Invention:	:	
EXPEDITED COMMUNICATION KEY	:	
SYSTEM AND METHOD	:	

This is a decision on the Renewed Petition to Revive Unavoidably Abandoned Patent Application, filed November 24, 2008. The petition is properly treated under 37 CFR 1.137(a).

This Petition is hereby **granted**.

Background

The above-identified application became abandoned for failure to timely and properly reply to the non-final Office action, mailed January 28, 2008. The Office action set a three (3) month period for reply from the mail date of the Office action. Extensions of time were available under 37 CFR 1.136(a). No reply having been received, the application became abandoned on April 29, 2008. The mailing of this Decision precedes the mailing of a Notice of Abandonment.

The September 8, 2008 petition

Applicant filed a petition on September 8, 2008 and requested entry of the amendment filed with the present petition, or alternatively petitions to revive the application based upon unavoidable delay in filing the reply to the Office action. In support of the request/petition, Applicant asserted that the Office action was not delivered to Applicant, and that Applicant learned of the Office action in a phone call from the Examiner on or about August 27, 2008.

Applicant stated that the Examiner relayed to the Applicant that while the Office action was mailed to the correspondence address of record, it was returned to this Office by the United States Postal Service as undeliverable.

Applicant averred that the correspondence address to which the Office action was mailed was, and remains the proper correspondence address.

The Decision dismissing the petition

The petition was dismissed in a Decision mailed September 24, 2008. The Decision stated that Applicant had failed to demonstrate that the Office action was not received. In addition to the statement from Applicant attesting to non-receipt of the Office action, and describing the system used for recording an Office action, Applicant was required to supply a copy of the record(s) used by the Applicant where the nonreceived Office action would have been entered had it been received and docketed. A copy of the master docket report showing all replies docketed for a date three months from the mail date of the nonreceived Office action, or if no such master docket record exists, a copy of the application file jacket; incoming mail log; calendar; reminder system; or the individual docket record for the application in question, was required.

It was also noted that the correspondence address on the petition differs from the correspondence address of record (Docket Clerk, PO Box 12608, Dallas, TX). Applicant wais advised that any statement that the Office action was not received at the correspondence address of record must be from a person with firsthand knowledge of the facts alleged. For instance, if there is a person who oversees the docketing of incoming correspondence from this Office, the statement of nonreceipt should be from that person.

The present renewed petition

The petition renewed satisfies the requirements of 37 CFR 1.137(a) in that petitioner has supplied (1) the required reply in the form of an Amendment; (2) the petition fee; and (3) a showing to the satisfaction of the Director that the entire delay was unavoidable.

The application will be referred to Technology Center Art Unit 2617 for processing of the reply filed September 8, 2008 in the normal course of business.

Telephone inquiries concerning this matter should be directed to the undersigned at (571) 272-3232.

/Derek L. Woods/
Derek L. Woods
Attorney
Office of Petitions

UNITED STATES PATENT AND TRADEMARK OFFICE

Commissioner for Patents
United States Patent and Trademark Office
P.O. Box 1450
Alexandria, VA 22313-1450
www.uspto.gov

Michael J. D'Aurelio
D'Aurelio & Mathews, LLC
96 Church Street
Chagrin Falls OH 44022

COPY MAILED

NOV 0 1 2006

OFFICE OF PETITIONS

In re Application of :
Majed M HAMDAN et al. :
Application No. 10/787,786 : DECISION ON PETITION
Filed: February 26, 2004 : UNDER 37 CFR 1.78(a)(3)
Attorney Docket No. 591-03-038 :

This is a decision on the renewed petition under 37 CFR 1.78(a)(3), filed May 26, 2005, to accept an unintentionally delayed claim under 35 U.S.C. § 120 for the benefit of priority to the prior-filed nonprovisional application set forth in the amendment filed with the petition.

The petition is **GRANTED**.

A petition for acceptance of a claim for late priority under 37 CFR 1.78(a)(3) is only applicable to those applications filed on or after November 29, 2000. Further, the petition is appropriate only after the expiration of the period specified in 37 CFR 1.78(a)(2)(ii). In addition, the petition under 37 CFR 1.78(a)(3) must be accompanied by:

(1) the reference required by 35 U.S.C. § 120 and 37 CFR 1.78(a)(2)(i) of the prior-filed application, unless previously submitted;
(2) the surcharge set forth in § 1.17(t); and
(3) a statement that the entire delay between the date the claim was due under 37 CFR 1.78(a)(2)(ii) and the date the claim was filed was unintentional. The Commissioner may require additional information where there is a question whether the delay was unintentional.

All the above requirements having been satisfied, the late claim for priority under 35 U.S.C. § 120 is accepted as being unintentionally delayed.

The granting of the petition to accept the delayed benefit claim to the prior-filed applications under 37 CFR 1.78(a)(3) should not be construed as meaning that this application is entitled to the benefit of the prior-filed applications. In order for this application to be entitled to the benefit of the prior-filed applications, all other requirements under 35 U.S.C. § 120 and 37 CFR 1.78(a)(1) and (a)(2) must be met. Similarly, the fact that the corrected Filing Receipt

accompanying this decision on petition includes the prior-filed applications should not be construed as meaning that applicant is entitled to the claim for benefit of priority to the prior-filed applications noted thereon. Accordingly, the examiner will, in due course, consider this benefit claim and determine whether the application is entitled to the benefit of the earlier filing date.

A corrected Filing Receipt, which includes the priority claim to the prior-filed nonprovisional applications, accompanies this decision on petition.

Any inquiries concerning this decision may be directed to David Bucci at (571) 272-7099. All other inquiries concerning either the examination procedures or status of the application should be directed to the Technology Center.

This application is being forwarded to Technology Center Art Unit 2613 for appropriate action on the amendment filed May 26, 2005, including consideration by the examiner of applicant's entitlement to claim benefit of priority under 35 U.S.C. § 120 to the prior-filed applications.

Brian Hearn
Petitions Examiner
Office of Petitions

ATTACHMENT: Corrected Filing Receipt

UNITED STATES PATENT AND TRADEMARK OFFICE

Commissioner for Patents
United States Patent and Trademark Office
P.O. Box 1450
Alexandria, VA 22313-1450
www.uspto.gov

Harold V. Stotland
Seyfarth Shaw LLP
Suite 4200
55 East Monroe Street
Chicago, IL 60603-5803

COPY MAILED

OCT 19 2004

OFFICE OF PETITIONS

In re Application of :
McNulty :
Application No. 10/787,793 : DECISION ON PETITION
Filed: February 26, 2004 :
Attorney Docket No. 404200 :

This is a decision on the petition filed September 13, 2004, requesting that the above-identified application be accorded a filing date of February 26, 2004, with Figures 1-3 described in the specification as part of the original disclosure.

On February 26, 2004, applicants filed the above-identified application. On August 5, 2004, the Office of Initial Patent Examination mailed a Notice of Omitted Item(s) in a Nonprovisional Application, stating that the application had been accorded a filing date of February 26, 2004, and advising applicants that Figures 1-3 appeared to have been omitted.

In response, on September 13, 2004, applicants filed the present petition and a copy of applicants' postcard receipt acknowledging receipt of "2 sheets of informal drawings (figs. 1-7)" on February 26, 2004. Additionally, applicants submitted 1 sheet of drawings, comprising Figures 1-3.

Upon review of the record, Figures 1-3, deposited on February 26, 2004, have not been located among the application papers. However, the evidence is convincing that the application papers deposited on February 26, 2004, included Figures 1-3, which were subsequently misplaced in the United States Patent and Trademark Office. Therefore, the application, including Figures 1-3, was complete on filing and will be granted a filing date of February 26, 2004.

Accordingly, the petition is granted.

The Notice of Omitted Item(s) was sent in error and is hereby vacated. Accordingly, the $130.00 petition fee is unnecessary and will be refunded to Deposit Account No. 19-1351.

The Office of Initial Patent Examination is directed **to accorded the above-identified application a filing date of February 26, 2004**, using Figures 1-3 submitted on September 13, 2004, and Figures 4-7 submitted on February 26, 2004, and to mail a corrected filing receipt. The Office is also directed to correct the records to indicate 2 sheets of drawings were present on filing.

Telephone inquiries specific to this matter should be directed to the undersigned at (571) 272-3211.

Christina Tartera Donnell

Christina Tartera Donnell
Senior Petitions Attorney
Office of Petitions

UNITED STATES PATENT AND TRADEMARK OFFICE

COMMISSIONER FOR PATENTS
UNITED STATES PATENT AND TRADEMARK OFFICE
P.O. BOX 1450
ALEXANDRIA, VA 22313-1450
www.uspto.gov

SEED INTELLECTUAL PROPERTY LAW GROUP PLLC
701 FIFTH AVE
SUITE 6300
SEATTLE WA 98104-7092

In re Application of
Ugo Panini, et al.
Application No. 10/787,821
Filed: February 26, 2004
US Publication No. 2004/0257626
Published: November 11, 2004
For: **SCANNER APPARATUS FOR SCANNING BANK CHECKS**

NOTIFICATION OF IDENTIFICATION OF PRIOR ART IN A THIRD PARTY SUBMISSION UNDER 37C.F.R. § 1.99

This is a decision on the third party submissions filed in the subject application on January 27, 2005, pursuant to 37 CFR 1.99.

37 C.F.R. § 1.99 Third-party submission in published application, states:

> (a) A submission by a member of the public of patents or publications relevant to a pending published application may be entered in the application file if the submission complies with the requirements of this section and the application is still pending when the submission and application file are brought before the examiner.
> (b) A submission under this section must identify the application to which it is directed by application number and include:
>
> (1) The fee set forth in § 1.17(p);
>
> (2) A list of the patents or publications submitted for consideration by the Office, including the date of publication of each patent or publication;
>
> (3) A copy of each listed patent or publication in written form or at least the pertinent portions; and
>
> (4) An English language translation of all the necessary and pertinent parts of any non-English language patent or publication in written form relied upon.
>
> (c) The submission under this section must be served upon the applicant in accordance with § 1.248.
> (d) A submission under this section shall not include any explanation of the patents or publications, or any other information. The Office will not enter such explanation or information if included in a submission under this section. A submission under this section is also limited to ten total patents or publications.
> (e) A submission under this section must be filed within two months from the date of publication of the application (§ 1.215(a)) or prior to the mailing of a notice of allowance (§ 1.311), whichever is earlier. Any submission under this section not filed within this period is permitted only when the patents or publications could not have been submitted to the Office earlier, and must also be accompanied by the processing fee set forth in § 1.17(i). A submission by a member of the public to a pending published application that does not comply with the requirements of this section will not be entered.
> (f) A member of the public may include a self-addressed postcard with a submission to receive an acknowledgment by the Office that the submission has been received. A member of the public filing a submission under this section will not receive any communications from the Office relating to the submission other than the return of a self-

addressed postcard. In the absence of a request by the Office, an applicant has no duty to, and need not, reply to a submission under this section.

The third party submission complies with the requirements set forth above. Accordingly, the third party submissions will be entered into the application file.

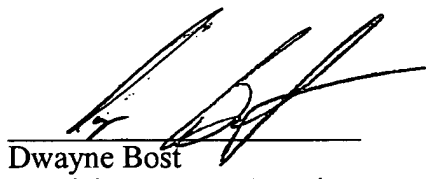

Dwayne Bost
Special Programs Examiner
Technology Center 2600
Communications

UNITED STATES PATENT AND TRADEMARK OFFICE

COMMISSIONER FOR PATENTS
UNITED STATES PATENT AND TRADEMARK OFFICE
P.O. BOX 1450
ALEXANDRIA, VA 22313-1450
www.uspto.gov

SEED INTELLECTUAL PROPERTY LAW GROUP PLLC
701 FIFTH AVE
SUITE 6300
SEATTLE WA 98104-7092

MAIL

APR 12 2005

DIRECTOR OFFICE
TECHNOLOGY CENTER 2600

In re Application of
Ugo Panini, et al.
Application No. 10/787,821
Filed: February 26, 2004
US Publication No. 2004/0257626
Published: November 11, 2004
For: **SCANNER APPARATUS FOR SCANNING BANK CHECKS**

NOTIFICATION OF IDENTIFICATION OF PRIOR ART IN A THIRD PARTY SUBMISSION UNDER 37C.F.R. § 1.99

This is a decision on the third party submissions filed in the subject application on January 27, 2005, pursuant to 37 CFR 1.99.

37 C.F.R. § 1.99 Third-party submission in published application, states:

> (a) A submission by a member of the public of patents or publications relevant to a pending published application may be entered in the application file if the submission complies with the requirements of this section and the application is still pending when the submission and application file are brought before the examiner.
> (b) A submission under this section must identify the application to which it is directed by application number and include:
>
> (1) The fee set forth in § 1.17(p);
>
> (2) A list of the patents or publications submitted for consideration by the Office, including the date of publication of each patent or publication;
>
> (3) A copy of each listed patent or publication in written form or at least the pertinent portions; and
>
> (4) An English language translation of all the necessary and pertinent parts of any non-English language patent or publication in written form relied upon.
>
> (c) The submission under this section must be served upon the applicant in accordance with § 1.248.
> (d) A submission under this section shall not include any explanation of the patents or publications, or any other information. The Office will not enter such explanation or information if included in a submission under this section. A submission under this section is also limited to ten total patents or publications.
> (e) A submission under this section must be filed within two months from the date of publication of the application (§ 1.215(a)) or prior to the mailing of a notice of allowance (§ 1.311), whichever is earlier. Any submission under this section not filed within this period is permitted only when the patents or publications could not have been submitted to the Office earlier, and must also be accompanied by the processing fee set forth in § 1.17(i). A submission by a member of the public to a pending published application that does not comply with the requirements of this section will not be entered.
> (f) A member of the public may include a self-addressed postcard with a submission to receive an acknowledgment by the Office that the submission has been received. A member of the public filing a submission under this section will not receive any communications from the Office relating to the submission other than the return of a self-

addressed postcard. In the absence of a request by the Office, an applicant has no duty to, and need not, reply to a submission under this section.

The third party submission complies with the requirements set forth above. Accordingly, the third party submissions will be entered into the application file.

Dwayne Bost
Special Programs Examiner
Technology Center 2600
Communications

UNITED STATES PATENT AND TRADEMARK OFFICE

Commissioner for Patents
United States Patent and Trademark Office
P.O. Box 1450
Alexandria, VA 22313-1450
www.uspto.gov

ALSTON & BIRD LLP
BANK OF AMERICA PLAZA
101 SOUTH TRYON STREET, SUITE 4000
CHARLOTTE NC 28280-4000

MAILED
FROM DIRECTORS OFFICE

OCT 13 2005

TECHNOLOGY CENTER 3600

In re application of : **DECISION ON PETITION**
Yu-Wen Chang : **TO MAKE SPECIAL**
Application No. 10/787,843 : **(COUNTER TERRORISM)**
Filed: February 26, 2004
For: ACTIVE PROTECTION DEVICE AND ASSOCIATED APPARATUS, SYSTEM, AND METHOD

This is in response to the petition filed on September 20, 2005 to make the above-identified application special on the basis of inventions for countering terrorism, as set forth in MPEP § 708.02, XI.

The requirement is a statement explaining how the invention contributes to countering terrorism. A fee is no longer required for this petition.

Applicant's attorney provides a statement that the invention relates to an aircraft sensors/security system for protecting aircraft from terrorist activities involving projectiles. One embodiment of the invention provides an apparatus mounted to an aircraft and configured to be capable of detecting incoming projectile threats, such as anti-aircraft missiles or rocket-propelled grenades, and deploying a countermeasure device capable of detecting and destroying the incoming threat at a minimum knock-out distance from the aircraft. The invention may therefor be used to protect passenger airliners (or even buildings, land-based vehicles, or a single person) from terrorist attacks involving projectile weapons.

Since all of the requirements for special status under MPEP § 708.02 XI have been met, the petition is **GRANTED**.

The examiner is directed (1) to make an interference search for possible interfering applications, (2) to promptly examine this application out of turn, and (3) if any interfering application is discovered, to examine such

application simultaneously and state in the first official letter of such application that it is being taken out of turn because of a possible interference.

Petitioner is advised that this application will continue to be special, throughout its entire prosecution and pendency, including interference or appeal, if any, only if petitioner makes a prompt ***bona fide*** effort, in response to each Office action, to place the application in condition for allowance, even if it is necessary to conduct an interview with the examiner to accomplish this purpose.

SUMMARY: Petition to Make Special **GRANTED**.

Randolph A. Reese
Special Programs Examiner
Technology Center 3600
(571) 272-6619

RAR/rjc 09/29/05

UNITED STATES PATENT AND TRADEMARK OFFICE

Commissioner for Patents
United States Patent and Trademark Office
P.O. Box 1450
Alexandria, VA 22313-1450
www.uspto.gov

TROP, PRUNER & HU, P.C.
1616 S. VOSS ROAD, SUITE 750
HOUSTON TX 77057-2631

COPY MAILED

MAR 16 2009

OFFICE OF PETITIONS

In re Application of

Ioannis Schoinas

Application No. 10/787,869

Filed: February 24, 2004

Attorney Docket No. ITL.1071US(P18164)

DECISION ON PETITION

This is a decision on the petition to withdraw the holding of abandonment under 37 CFR 1.181(a), filed February 11, 2009.

The petition is **dismissed**.

This application was held abandoned June 6, 2008, after no reply was received to the final Office action mailed June 6, 2008. The notice set forth a shortened statutory period of reply of three months from its mailing date. No response was received within the allowable period and the application became abandoned on September 7, 2008. A Notice of Abandonment was mailed January 22, 2009. The instant petition was filed on February 11, 2009. Petitioner maintains that the notice of June 6, 2008, was never received.

When, as in this case petitioner is arguing that an Office communication was not received, petitioner must establish non-receipt of the Office communication in accordance with section 711.03(c) of the *Manual of Patent Examining Procedure* that requires the following:

> To minimize costs and burdens to practitioners and the Office, the Office has modified the showing required to establish nonreceipt of an Office action. The showing required to establish nonreceipt of an Office communication must include a statement from the practitioner **>describing the system used for recording an Office action received at the correspondence address of record with the USPTO. The statement should establish that the docketing system is sufficiently reliable. It is expected that the record would include, but not be limited to, the application number, attorney docket number, the mail date of the Office action and the due date for the response.
>
> Practitioner must state that the Office action was not received at the correspondence address of record, and that a search of the practitioner's record(s), including any file jacket or the equivalent, and the application contents, indicates that the Office action was not received. A copy of the record(s) used by the practitioner where the non-received Office action would have been entered had it been received is required.
>
> A copy of the practitioner's record(s) required to show non-receipt of the Office action should include the master docket for the firm. That is, if a three month period for reply was set in the nonreceived Office action, a copy of the master docket report showing all replies docketed for a date three months from the mail date of

> the nonreceived Office action must be submitted as documentary proof of nonreceipt of the Office action. If no such master docket exists, the practitioner should so state and provide other evidence such as, but not limited to, the following: the application file jacket; incoming mail log; calendar; reminder system; or the individual docket record for the application in question.<

Petitioner has not made the evidentiary showing specified above. The petition is dismissed accordingly. The renewed petition must be accompanied by a copy of petitioner's **master docket record**, or, if a master docket does not exists, the renewed petition should so state.

Alternatively, petitioner may revive the application based on unintentional abandonment under 37 CFR 1.137(b). A grantable petition pursuant to 37 CFR 1.137(b) must be accompanied by the required reply, the required petition fee ($1,620.00 for a large entity and $810.00 for a verified small entity), and a statement that the **entire** delay in filing the required reply from the due date for the reply until the filing of a grantable petition pursuant to 37 CFR 1.137(b) was unintentional.

Further correspondence with respect to this matter should be addressed as follows:

By mail: Commissioner for Patents
United States Patent and Trademark Office
Box 1450
Alexandria, VA 22313-1450

By facsimile: (571) 273-8300
Attn: Office of Petitions

Telephone inquiries concerning this decision should be directed to the undersigned (571) 272-3222.

Kenya A. McLaughlin
Petitions Attorney
Office of Petitions

UNITED STATES PATENT AND TRADEMARK OFFICE

Commissioner for Patents
United States Patent and Trademark Office
P.O. Box 1450
Alexandria, VA 22313-1450
www.uspto.gov

TROP, PRUNER & HU, P.C.
1616 S. VOSS ROAD, SUITE 750
HOUSTON TX 77057-2631

COPY MAILED

JUN 19 2009

OFFICE OF PETITIONS

In re Application of

Ioannis Schoinas

Application No. 10/787,869

Filed: February 24, 2004

Attorney Docket No. ITL.1071US(P18164)

DECISION ON PETITION

This is a decision on the renewed petition to withdraw the holding of abandonment under 37 CFR 1.181(a), filed May 13, 2009.

The petition is **granted**.

This application was held abandoned June 6, 2008, after no reply was received to the final Office action mailed June 6, 2008. The notice set forth a shortened statutory period of reply of three months from its mailing date. No response was received within the allowable period and the application became abandoned on September 7, 2008. A Notice of Abandonment was mailed January 22, 2009. The instant renewed petition was filed on May 13, 2009. Petitioner maintains that the notice of June 6, 2008, was never received.

When, as in this case petitioner is arguing that an Office communication was not received, petitioner must establish non-receipt of the Office communication in accordance with section 711.03(c) of the *Manual of Patent Examining Procedure* that requires the following:

> To minimize costs and burdens to practitioners and the Office, the Office has modified the showing required to establish nonreceipt of an Office action. The showing required to establish nonreceipt of an Office communication must include a statement from the practitioner describing the system used for recording an Office action received at the correspondence address of record with the USPTO. The statement should establish that the docketing system is sufficiently reliable. It is expected that the record would include, but not be limited to, the application number, attorney docket number, the mail date of the Office action and the due date for the response.
>
> Practitioner must state that the Office action was not received at the correspondence address of record, and that a search of the practitioner's record(s), including any file jacket or the equivalent, and the application contents, indicates that the Office action was not received. A copy of the record(s) used by the practitioner where the non-received Office action would have been entered had it been received is required.

> A copy of the practitioner's record(s) required to show non-receipt of the Office action should include the master docket for the firm. That is, if a three month period for reply was set in the nonreceived Office action, a copy of the master docket report showing all replies docketed for a date three months from the mail date of the nonreceived Office action must be submitted as documentary proof of nonreceipt of the Office action. If no such master docket exists, the practitioner should so state and provide other evidence such as, but not limited to, the following: the application file jacket; incoming mail log; calendar; reminder system; or the individual docket record for the application in question.

Petitioner has met the burden of proof as established by Section 711.03(c)(II) of the MPEP. The holding of abandonment is, therefore, withdrawn.

The application file is being forwarded to Technology Center 2100, GAU 2116 for further processing that may include remailing the final Office action and resetting of the period for reply.

Questions concerning this decision should be directed to the undersigned at (571) 272-3222.

Kenya A. McLaughlin
Petitions Attorney
Office of Petitions

UNITED STATES PATENT AND TRADEMARK OFFICE

Commissioner for Patents
United States Patent and Trademark Office
P.O. Box 1450
Alexandria, VA 22313-1450
www.uspto.gov

QUALCOMM INCORPORATED
5775 MOREHOUSE DR.
SAN DIEGO CA 92121

COPY MAILED

JUL 0 1 2008

In re Application of :
Joseph Patrick Burke :
Application No.: 10/787,870 : ON PETITION
Filed: February 25, 2004 :
Attorney Docket No: 030315 :

This is a decision on the petition under 37 CFR §1.137(b), August 1, 2007, to revive the above-identified application.

The petition is **dismissed**.

Any request for reconsideration of this decision must be submitted within TWO (2) MONTHS from the mail date of this decision. Extensions of time under 37 CFR 1.136(a) are permitted. The reconsideration request should include a cover letter entitled "Renewed Petition" under 37 CFR 1.137(b)."

This application became abandoned for failure to respond in a timely manner to the final Office action mailed January 24, 2007. The notice set a shortened statutory period for reply of three months from its mailing date. No response was received within the allowable period, and the application became abandoned on April 25, 2007.

Effective December 1, 1997, the provisions of 37 CFR 1.137(b) now provide that where the delay in reply was unintentional, a petition may be filed to revive an abandoned application or a lapsed patent pursuant to 37 CFR 1.137(b). A grantable petition pursuant to 37 CFR 1.137(b) must be accompanied by:

(1) the required reply, unless previously filed. In a non-provisional application abandoned for failure to prosecute, the required reply may be met by the filing of a continuing application. In an application or patent, abandoned or lapsed for failure to pay the issue fee, or any portion thereof, the required reply must be the payment of the issue fee or any outstanding balance thereof.

(2) the petition fee as set forth in 37 CFR 1.17(m);

(3) a statement that the entire delay in filing the required reply from the due date for the reply until the filing of a grantable petition pursuant to 37 CFR 1.137(b) was unintentional. The Commissioner may require additional information where there is a question whether the delay was unintentional; and

(4) any terminal disclaimer (and fee set forth in 37 CFR 1.20(d)) required pursuant to 37 CFR 1.137(c).

The instant petition does not satisfy the requirements of items (1) and (2) above.

As to item (1), a review of the application file reveals that an Appeal Brief was filed with the petition in response to the final Office. The petition states that a Request for Continued Examination was also filed, although such was not noted in the application file and the required fee is not credited to the application. The undersigned did not note a Notice of Appeal in the record, although the fee for such is credited to the application. Clarification of the record is required. Normally, a proper response to a final Office action is an amendment that places the application in condition for allowance, a Notice of Appeal, or a Request for Continued Examination. In this case, the Appeal Brief was filed before a Notice of Appeal is of record. It is requested that petitioner make clear what response is intended—either a Notice of Appeal or a Request for Continued Examination.

As to item (3), a statement the entire delay in filing the required reply from the due date for the reply until the filing of a grantable petition pursuant to 37 CFR 1.137(b) was unintentional was not found in the petition. The renewed petition must make this declaration in order to be considered grantable.

Further correspondence with respect to this matter should be addressed as follows:

By mail: Commissioner for Patents
United States Patent and Trademark Office
Box 1450
Alexandria, VA 22313-1450

By facsimile: (571) 273-8300
Attn: Office of Petitions

Telephone inquiries concerning this matter may be directed to the undersigned at (571) 272-3222.

Kenya A. McLaughlin
Petitions Attorney
Office of Petitions

UNITED STATES PATENT AND TRADEMARK OFFICE

Commissioner for Patents
United States Patent and Trademark Office
P.O. Box 1450
Alexandria, VA 22313-1450
www.uspto.gov

QUALCOMM INCORPORATED
5775 MOREHOUSE DR.
SAN DIEGO CA 92121

MAILED

FEB 0 2 2009

OFFICE OF PETITIONS

In re Application of :
Joseph Patrick Burke :
Application No.: 10/787,870 : ON PETITION
Filed: February 25, 2004 :
Attorney Docket No: 030315 :

This is a decision on the renewed petition under 37 CFR 1.137(b), filed December 23, 2008, to revive the above-identified application.

The renewed petition is **GRANTED**.

This application became abandoned for failure to respond in a timely manner to the final Office action mailed January 24, 2007. The notice set a shortened statutory period for reply of three months from its mailing date. No response was received within the allowable period, and the application became abandoned on April 25, 2007. A petition under 37 CFR 1.137(b) was first filed on August 1, 2007, and dismissed by a decision mailed July 1, 2008.

It is noted that two renewed petitions under 37 CFR 1.137(b) were filed on December 23, 2008—one signed by David J. Huffaker and the other signed by William Marcus Hooks. It is noted that Mr. Huffaker is not noted in USPTO records as having power of attorney in this application. The statement of unintentional delay is accepted from Mr. Hooks, accordingly. As to that statement, it is further noted that 37 CFR 1.137(b)(3) requires a statement that the entire delay in filing the required reply from the due date for the reply until the filing of a grantable petition pursuant to 37 CFR 1.137(b) was unintentional. If the statement contained in the instant petition varies from the language required by 37 CFR 1.137(b)(3), the statement contained in the instant petition is being construed as the statement required by 37 CFR 1.137(b)(3) and petitioner must notify the Office if this is not a correct interpretation of the statement contained in the instant petition.

The Notice of Appeal, filed December 23, 2008, has been entered and made of record. Accordingly, the two-month period for filing an appeal brief (accompanied by the fee required by 37 CFR 1.17(c)) runs from the date of this decision.

The appeal brief filed December 23, 2008, is also noted. It is noted that Mr. Huffaker signed the appeal brief. Petitioner is cautioned that the examiner may not accept the appeal brief as filed because Mr. Huffaker is not of record in the application. This should be determined by the examiner. The petition is being granted on the basis of the Notice of Appeal which is signed by William Marcus Hooks.

The application file is being forwarded to Technology Center 2600, GAU 2611 for further processing.

Telephone inquiries concerning this decision should be directed to the undersigned at (571) 272-3222.

Kenya A. McLaughlin
Petitions Attorney
Office of Petitions

SPE RESPONSE FOR CERTIFICATE OF CORRECTION

DATE : 7-20-06

Paper No.: _____

TO SPE OF : ART UNIT 2812

SUBJECT : Request for Certificate of Correction for Appl. No.: 10/787872 Patent No.: 7041552

Please respond to this request for a certificate of correction within 7 days.

Please review the requested changes/corrections as shown in the **COCIN** document(s) in the IFW application image. No new matter should be introduced, nor should the scope or meaning of the claims be changed.

Check Drawings

Please complete the response (see below) and forward the completed response to scanning using document code **COCX**.

C Young

Certificates of Correction Branch

703-308-9390 ext. 117

Thank You For Your Assistance

The request for issuing the above-identified correction(s) is hereby:

Note your decision on the appropriate box.

- ☑ **Approved** — All changes apply.
- ☐ **Approved in Part** — Specify below which changes **do not** apply.
- ☐ **Denied** — State the reasons for denial below.

Comments: _____

SPE

2812

Art Unit

UNITED STATES PATENT AND TRADEMARK OFFICE

Commissioner for Patents
United States Patent and Trademark Office
P.O. Box 1450
Alexandria, VA 22313-1450
www.uspto.gov

TOWNSEND AND TOWNSEND AND CREW, LLP
TWO EMBARCADERO CENTER
EIGHTH FLOOR
SAN FRANCISCO, CA 94111-3834

COPY MAILED

JUL 2 9 2008

OFFICE OF PETITIONS

In re Application of :
Susan May Kingsman, et al. :
Application No. 10/787,881 : DECISION ON PETITION
Filed: February 25, 2004 : TO WITHDRAW
Attorney Docket No. 021911-000330US : FROM RECORD
:

This is a decision on the Request to Withdraw as attorney or agent of record under 37 C.F.R. § 1.36(b), filed January 24, 2008.

The request is **DISMISSED** as moot.

A review of the file record indicates that the power of attorney to Townsend and Townsend and Crew, LLP has been revoked by the assignee of the patent application on March 19, 2008. Accordingly, the request to withdraw under 37 C.F.R. § 1.36(b) is moot.

All future communications from the Office will continue to be directed to the below-listed address until otherwise notified by applicant.

Telephone inquires concerning this decision should be directed to undersigned at 571-272- 1642.

April M. Wise
Petitions Examiner
Office of Petitions

cc: MARSHALL, GERSTEIN & BORUN, LLP
233 SOUTH WACKER DRIVE
6300 SEARS TOWER
CHICAGO, IL 60606-6357

UNITED STATES PATENT AND TRADEMARK OFFICE

Commissioner for Patents
United States Patent and Trademark Office
P.O. Box 1450
Alexandria, VA 22313-1450
www.uspto.gov

KELLEY DRYE & WARREN LLP
TWO STAMFORD PLAZA
281 TRESSER BOULEVARD
STAMFORD CT 06901

COPY MAILED

AUG 0 3 2009

OFFICE OF PETITIONS

In re Application of :

CARUS, Alwin B. et al. :
Application No. 10/787,889 : DECISION ON PETITION
Filed: February 27, 2004 : TO WITHDRAW
Attorney Docket No. **018632.0068.NPUS00** : FROM RECORD

This is a decision on the Request to Withdraw as attorney or agent of record under 37 C.F.R. § 1.36(b), filed June 18, 2009.

The request is **NOT APPROVED**.

A grantable request to withdraw as attorney/agent of record must be signed by every attorney/agent seeking to withdraw or contain a clear indication that one attorney is signing on behalf of another/others. A request to withdraw will not be approved unless at least 30 (thirty) days would remain between the date of approval and the later of the expiration date of a time to file a response or the expiration date of the maximum time period which can be extended under 37 C.F.R. § 1.136(a).

The request to withdraw less than all attorneys appointed by customer number 47670 cannot be approved. The addition and/or deletion of a practitioner from the list of practitioners associated with a Customer Number should be made by submitting a "Request for Customer Number Data Change" (PTO/SB/124) which will result in the addition or deletion of such practitioner from the list of persons authorized to represent any applicant or assignee of the entire interest who appointed all of the practitioners associated with such Customer Number. See MPEP 403 Section I. Customer Number Practice.

All future communications from the Office will continue to be directed to the above-listed address until otherwise notified by applicant.

Telephone inquiries concerning this decision should be directed to Tredelle Jackson at 571-272- 2783.

Tredelle D. Jackson
Paralegal Specialist
Office of Petitions

WOLF GREENFIELD & SACKS, P.C.
600 ATLANTIC AVENUE
BOSTON, MA 02210-2206

UNITED STATES PATENT AND TRADEMARK OFFICE

COMMISSIONER FOR PATENTS
UNITED STATES PATENT AND TRADEMARK OFFICE
WASHINGTON, D.C. 20231
www.uspto.gov

APPLICATION NUMBER	FILING/RECEIPT DATE	FIRST NAMED APPLICANT	ATTORNEY DOCKET NUMBER
10/787,894	02/25/2004	Hamid Jojaji	BALDS2.37AUS1C1

CONFIRMATION NO.
2092

KNOBBE MARTENS OLSON & BEAR LLP
2040 MAIN STREET
FOURTEENTH FLOOR
IRVINE CA 92614

Date Mailed: January 4, 2005

Decision Dismissing Petition under 37 CFR 1.138(c)

The declaration of express abandonment will not be recognized

This is in response to the petition under 37 CFR 1.138(c), for express abandonment to avoid publication of the above-identified application.

The petition is dismissed.

The express abandonment will **not** be recognized for the reason(s) indicated below:

1. ☐ The petition under 37 CFR 1.138(c) was not filed in sufficient time to permit the appropriate officials to recognize the abandonment and remove the application from the publication process.

2. ☐ The petition was not signed by a party authorized by 37 CFR 1.33(b)(1), (3) or (4).

3. ■ The Application was published in compliance with 35 U.S.C. 122(b), and it is available on the USPTO web site at http://www.uspto.gov/patft/index.html.

The application **has/will be published** as scheduled.

Telephone inquiries should be directed Office of Patent Publication, Pre-Grant Publication Division, 703-605-4283.

Barbara Debram

Office of Patent Publication
Pre-Grant Publication Division

UNITED STATES PATENT AND TRADEMARK OFFICE

Commissioner for Patents
United States Patent and Trademark Office
P.O. Box 1450
Alexandria, VA 22313-1450
www.uspto.gov

KNOBBE MARTENS OLSON & BEAR LLP
2040 MAIN STREET, 14th FLOOR
IRVINE CA 92614

COPY MAILED

NOV 14 2006

OFFICE OF PETITIONS

In re Application of :
HOJAJI, et al. :
Application No. 10/787,894 : DECISION ON PETITION
Filed: February 25, 2004 : TO WITHDRAW
Attorney Docket No. BALDS2.37AUS1C1 : FROM RECORD
:

This is a decision on the Request to Withdraw as attorney or agent of record under 37 C.F.R. § 1.36(b), filed August 15, 2006.

The request is **APPROVED**.

A grantable request to withdraw as attorney/agent of record must be signed by every attorney/agent seeking to withdraw or contain a clear indication that one attorney is signing on behalf of another/others. A request to withdraw will not be approved unless at least 30 (thirty) days would remain between the date of approval and the later of the expiration date of a time to file a response or the expiration date of the maximum time period which can be extended under 37 C.F.R. § 1.136(a).

The request was signed by Linda H. Liu, the sole attorney of record. Linda H. Liu have been withdrawn as attorney or agent of record. Applicant is reminded that there is no attorney of record at this time.

The request to change the correspondence of record is not acceptable as the requested correspondence address is not that of: (1) the first named signing inventor; or (2) an intervening assignee of the entire interest under 37 C.F.R 3.71. All future communications from the Office will be directed to the first named signing inventor at the first copied address below until otherwise properly notified by the applicant.

Telephone inquiries concerning this decision should be directed to the undersigned at 571-272-7253.

Monica A. Graves
Petitions Examiner
Office of Petitions

cc: **Hamid Hojaji**
2140 Bonnie Brae Avenue
Claremont, CA 91711

UNITED STATES PATENT AND TRADEMARK OFFICE

UNITED STATES DEPARTMENT OF COMMERCE
United States Patent and Trademark Office
Address: COMMISSIONER FOR PATENTS
P.O. Box 1450
Alexandria, Virginia 22313-1450
www.uspto.gov

APPLICATION NUMBER	FILING OR 371 (c) DATE	FIRST NAMED APPLICANT	ATTY. DOCKET NO./TITLE
10/787,894	02/25/2004	Hamid Hojaji	BALDS2.37AUS1C1

CONFIRMATION NO. 2092

OC000000021208137

20995
KNOBBE MARTENS OLSON & BEAR LLP
2040 MAIN STREET
FOURTEENTH FLOOR
IRVINE, CA 92614

Date Mailed: 11/13/2006

NOTICE REGARDING CHANGE OF POWER OF ATTORNEY

This is in response to the Power of Attorney filed 08/15/2006.

- The withdrawal as attorney in this application has been accepted. Future correspondence will be mailed to the new address of record. 37 CFR 1.33.

MONICA A GRAVES
OP (571) 272-7253

FORMER ATTORNEY/AGENT COPY

UNITED STATES PATENT AND TRADEMARK OFFICE

UNITED STATES DEPARTMENT OF COMMERCE
United States Patent and Trademark Office
Address: COMMISSIONER FOR PATENTS
P.O. Box 1450
Alexandria, Virginia 22313-1450
www.uspto.gov

APPL NO.	FILING OR 371 (c) DATE	ART UNIT	FIL FEE REC'D	ATTY.DOCKET NO	DRAWINGS	TOT CLMS	IND CLMS
10/787,896	02/26/2004	2861	1116	88523.0001	4	9	4

CONFIRMATION NO. 2081

UPDATED FILING RECEIPT

OC000000013293447

000026021
HOGAN & HARTSON L.L.P.
500 S. GRAND AVENUE
SUITE 1900
LOS ANGELES, CA 90071-2611

Date Mailed: 07/21/2004

Receipt is acknowledged of this regular Patent Application. It will be considered in its order and you will be notified as to the results of the examination. Be sure to provide the U.S. APPLICATION NUMBER, FILING DATE, NAME OF APPLICANT, and TITLE OF INVENTION when inquiring about this application. Fees transmitted by check or draft are subject to collection. Please verify the accuracy of the data presented on this receipt. **If an error is noted on this Filing Receipt, please write to the Office of Initial Patent Examination's Filing Receipt Corrections, facsimile number 703-746-9195. Please provide a copy of this Filing Receipt with the changes noted thereon. If you received a "Notice to File Missing Parts" for this application, please submit any corrections to this Filing Receipt with your reply to the Notice. When the USPTO processes the reply to the Notice, the USPTO will generate another Filing Receipt incorporating the requested corrections (if appropriate).**

Applicant(s)

Takashi Nagai, Nagano, JAPAN;

Assignment For Published Patent Application

SEIKO EPSON CORPORATION;

Domestic Priority data as claimed by applicant

Foreign Applications

JAPAN 2003-52504 02/28/2003

If Required, Foreign Filing License Granted: 05/18/2004

Projected Publication Date: 10/28/2004

Non-Publication Request: No

Early Publication Request: No

Title

Printing control apparatus, printing control method and printing control program product

Preliminary Class

347

LICENSE FOR FOREIGN FILING UNDER
Title 35, United States Code, Section 184
Title 37, Code of Federal Regulations, 5.11 & 5.15

GRANTED

The applicant has been granted a license under 35 U.S.C. 184, if the phrase "IF REQUIRED, FOREIGN FILING LICENSE GRANTED" followed by a date appears on this form. Such licenses are issued in all applications where the conditions for issuance of a license have been met, regardless of whether or not a license may be required as set forth in 37 CFR 5.15. The scope and limitations of this license are set forth in 37 CFR 5.15(a) unless an earlier license has been issued under 37 CFR 5.15(b). The license is subject to revocation upon written notification. The date indicated is the effective date of the license, unless an earlier license of similar scope has been granted under 37 CFR 5.13 or 5.14.

This license is to be retained by the licensee and may be used at any time on or after the effective date thereof unless it is revoked. This license is automatically transferred to any related applications(s) filed under 37 CFR 1.53(d). This license is not retroactive.

The grant of a license does not in any way lessen the responsibility of a licensee for the security of the subject matter as imposed by any Government contract or the provisions of existing laws relating to espionage and the national security or the export of technical data. Licensees should apprise themselves of current regulations especially with respect to certain countries, of other agencies, particularly the Office of Defense Trade Controls, Department of State (with respect to Arms, Munitions and Implements of War (22 CFR 121-128)); the Office of Export Administration, Department of Commerce (15 CFR 370.10 (j)); the Office of Foreign Assets Control, Department of Treasury (31 CFR Parts 500+) and the Department of Energy.

NOT GRANTED

No license under 35 U.S.C. 184 has been granted at this time, if the phrase "IF REQUIRED, FOREIGN FILING LICENSE GRANTED" DOES NOT appear on this form. Applicant may still petition for a license under 37 CFR 5.12, if a license is desired before the expiration of 6 months from the filing date of the application. If 6 months has lapsed from the filing date of this application and the licensee has not received any indication of a secrecy order under 35 U.S.C. 181, the licensee may foreign file the application pursuant to 37 CFR 5.15(b).

UNITED STATES PATENT AND TRADEMARK OFFICE

UNITED STATES DEPARTMENT OF COMMERCE
United States Patent and Trademark Office
Address: COMMISSIONER FOR PATENTS
P.O. Box 1450
Alexandria, Virginia 22313-1450
www.uspto.gov

APPL NO.	FILING OR 371 (c) DATE	ART UNIT	FIL FEE REC'D	ATTY.DOCKET NO	DRAWINGS	TOT CLMS	IND CLMS
10/787,896	02/26/2004	2861	1116	88523.0001	4	9	4

CONFIRMATION NO. 2081

CORRECTED FILING RECEIPT

000026021
HOGAN & HARTSON L.L.P.
500 S. GRAND AVENUE
SUITE 1900
LOS ANGELES, CA 90071-2611

OC000000013281443

Date Mailed: 07/20/2004

Receipt is acknowledged of this regular Patent Application. It will be considered in its order and you will be notified as to the results of the examination. Be sure to provide the U.S. APPLICATION NUMBER, FILING DATE, NAME OF APPLICANT, and TITLE OF INVENTION when inquiring about this application. Fees transmitted by check or draft are subject to collection. Please verify the accuracy of the data presented on this receipt. **If an error is noted on this Filing Receipt, please write to the Office of Initial Patent Examination's Filing Receipt Corrections, facsimile number 703-746-9195. Please provide a copy of this Filing Receipt with the changes noted thereon. If you received a "Notice to File Missing Parts" for this application, please submit any corrections to this Filing Receipt with your reply to the Notice. When the USPTO processes the reply to the Notice, the USPTO will generate another Filing Receipt incorporating the requested corrections (if appropriate).**

Applicant(s)

Takashi Nagai, Nagano, JAPAN;

Assignment For Published Patent Application

SEIKO EPSON CORPORATION;

Domestic Priority data as claimed by applicant

Foreign Applications

JAPAN 2003-52504 02/28/2003

If Required, Foreign Filing License Granted: 05/18/2004

Projected Publication Date: 10/28/2004

Non-Publication Request: No

Early Publication Request: No

Title

Printing control apparatus, printing control method and printing control program product

Preliminary Class

347

LICENSE FOR FOREIGN FILING UNDER
Title 35, United States Code, Section 184
Title 37, Code of Federal Regulations, 5.11 & 5.15

GRANTED

The applicant has been granted a license under 35 U.S.C. 184, if the phrase "IF REQUIRED, FOREIGN FILING LICENSE GRANTED" followed by a date appears on this form. Such licenses are issued in all applications where the conditions for issuance of a license have been met, regardless of whether or not a license may be required as set forth in 37 CFR 5.15. The scope and limitations of this license are set forth in 37 CFR 5.15(a) unless an earlier license has been issued under 37 CFR 5.15(b). The license is subject to revocation upon written notification. The date indicated is the effective date of the license, unless an earlier license of similar scope has been granted under 37 CFR 5.13 or 5.14.

This license is to be retained by the licensee and may be used at any time on or after the effective date thereof unless it is revoked. This license is automatically transferred to any related applications(s) filed under 37 CFR 1.53(d). This license is not retroactive.

The grant of a license does not in any way lessen the responsibility of a licensee for the security of the subject matter as imposed by any Government contract or the provisions of existing laws relating to espionage and the national security or the export of technical data. Licensees should apprise themselves of current regulations especially with respect to certain countries, of other agencies, particularly the Office of Defense Trade Controls, Department of State (with respect to Arms, Munitions and Implements of War (22 CFR 121-128)); the Office of Export Administration, Department of Commerce (15 CFR 370.10 (j)); the Office of Foreign Assets Control, Department of Treasury (31 CFR Parts 500+) and the Department of Energy.

NOT GRANTED

No license under 35 U.S.C. 184 has been granted at this time, if the phrase "IF REQUIRED, FOREIGN FILING LICENSE GRANTED" DOES NOT appear on this form. Applicant may still petition for a license under 37 CFR 5.12, if a license is desired before the expiration of 6 months from the filing date of the application. If 6 months has lapsed from the filing date of this application and the licensee has not received any indication of a secrecy order under 35 U.S.C. 181, the licensee may foreign file the application pursuant to 37 CFR 5.15(b).

UNITED STATES PATENT AND TRADEMARK OFFICE

Commissioner for Patents
United States Patent and Trademark Office
P.O. Box 1450
Alexandria, VA 22313-1450
www.uspto.gov

October 3, 2007

Charles N. J. Ruggiero
OHLANDT, GREELEY, RUGGIERO & PERLE, LLP
One Landmark Square, 10th Floor
Stamford, CT 06901-2682

Patent No.: 7,064,483 B2
Application No.: 10/787,904
Inventor(s): Clemens Ottermann, et al.
Issued: June 20, 2006
Title: **PROCESS FOR PRODUCING ORGANIC LIGHT-EMITTING DIODES, AND ORGANIC LIGHT-EMITTING DIODE**

Re: Request for Certificate of Correction

Consideration has been given your request for the issuance of a certificate of correction for the above-identified patent under the provisions of Rule(s) 1.322 and/or 1.323.

Assignees' names and addresses (assignment data) printed in a patent, are based *solely* on information supplied in the appropriate space for identifying the assignment data, i.e., item 3 of the Issue Fee Transmittal Form PTOL-85B. Granting of a request under 37 CFR 3.81(b) is required to correct applicant's error providing ***incorrect or erroneous*** assignment data, *before* issuance of a Certificate of Correction, under 37 CFR 1.323 *(see Manual of Patent Examining Procedures (M.P.E.P) Chp.1400, sect. 1481).* This procedure is required *at any time after the issue fee is paid*, including after issuance of the patent.

In view of the foregoing, your request, in this matter, is hereby denied.

A request to correct the Assignee under 37 CFR 3.81(b) should include:

A. **the processing fee set forth in 37 CFR 1.117(h) (currently $130);**
B. a statement that the failure to include the correct assignee name on the PTOL-85B was inadvertent; and
C. a copy of the Notice of Recordation of Assignment Document, reflecting the reel and frame number where the assignment(s) is recorded and/or reflecting proof of *the date* the assignment was submitted for recordation.

In the Request, Applicant(s) may request that the file be forwarded to Certificates of Correction Branch, for issuance of a Certificate of Correction, if the Request is granted.

Any request under 37 CFR 3.81(b) should be directed to the following address or facsimile number:

By mail:	Mail Stop PETITIONS Commissioner for Patents Post Office Box 1450 Alexandria, VA 22313-1450
By hand:	Customer Service Window Mail Stop Petitions Randolph Building 401 Dulany Street Alexandria, VA 22314
By fax:	(571) 273-0025 ATTN: Office of Petitions

If a fee (currently $100) was previously submitted for consideration of a Request for Certificate of Correction, under CFR 1.323, to correct assignment data, no additional fee is required.

A certificate of correction will be issued to correct the remaining errors mentioned in your request.

Virginia Tolbert
For Cecelia Newman
Decisions & Certificate of Correction Branch
(703) 305-8309 or (703) **308-9390 ext 113**

vt

SPE RESPONSE FOR CERTIFICATE OF CORRECTION

Paper No.:20070420

DATE : April 20, 2007

TO SPE OF : ART UNIT 1624

SUBJECT : Request for Certificate of Correction on Patent No.: 7,179,819

A response is requested with respect to the accompanying request for a certificate of correction.

Please complete this form and return with file, within **7** days to:
Certificates of Correction Branch - PK 3-910
Palm location **7590** - Tel. No. 305-8201

With respect to the change(s) requested, correcting Office and/or Applicant's errors, should the patent read as shown in the certificate of correction? No new matter should be introduced, nor should the scope or meaning of the claims be changed.

Thank You For Your Assistance **Certificates of Correction Branch**

The request for issuing the above-identified correction(s) is hereby:
Note your decision on the appropriate box.

☒ **Approved** **All** changes apply.

☐ **Approved in Part** Specify below which changes **do not** apply.

☐ **Denied** State the reasons for denial below.

Comments:

SAJ 4/24/07
SHAOJIA ANNA JIANG, PH.D.
SUPERVISORY PATENT EXAMINER

SAJ for
SPE: James O. Wilson **Art Unit** 1624

SPE RESPONSE FOR CERTIFICATE OF CORRECTION

Serial No : 10/787905

Paper No.:20070420

DATE : April 20, 2007

TO SPE OF : ART UNIT 1624

SUBJECT : Request for Certificate of Correction on Patent No.: 7,179,819

A response is requested with respect to the accompanying request for a certificate of correction.

Please complete this form and return with file, within **7** days to:
Certificates of Correction Branch - PK 3-910
Palm location **7590** - Tel. No. 305-8201

With respect to the change(s) requested, correcting Office and/or Applicant's errors, should the patent read as shown in the certificate of correction? No new matter should be introduced, nor should the scope or meaning of the claims be changed.

Thank You For Your Assistance **Certificates of Correction Branch**

The request for issuing the above-identified correction(s) is hereby:
Note your decision on the appropriate box.

☒ **Approved** — **All** changes apply.

☐ **Approved in Part** — Specify below which changes **do not** apply.

☐ **Denied** — State the reasons for denial below.

Comments:

4/24/07
SHAOJIA ANNA JIANG, PH.D.
SUPERVISORY PATENT EXAMINER

for
SPE: James O. Wilson **Art Unit** 1624

UNITED STATES PATENT AND TRADEMARK OFFICE

Commissioner for Patents
United States Patent and Trademark Office
P.O. Box 1450
Alexandria, VA 22313-1450
www.uspto.gov

RheoGene, Inc.
2650 Eisenhower Avenue
Norristown, PA 19403

COPY MAILED

MAR 2 2 2005

OFFICE OF PETITIONS

In re Application of
Hormann et al.
Application No. 10/787,906
Filed: February 26, 2004
Attorney Docket No. A01499-US

Decision on Petition

This is a decision on the petition filed December 2, 2004, to accord the above-identified application a filing date of February 26, 2004.

On February 26, 2004, the application was filed.

On September 22, 2004, the Office of Initial Patent Examination mailed a Notice stating that drawings were missing and that a filing date would be accorded upon receipt of drawings.

In response, the present petition was filed alleging that a drawing was deposited on February 26, 2004. In support, petitioner has submitted a postcard receipt which acknowledges receipt of "Drawing (1 pg.)" on February 26, 2004.[1]

Upon review of the record, the drawing sheet deposited on February 26, 2004, has not been located. However, the evidence is convincing that the application papers deposited on February 26, 2004, included the drawing sheet, and that the sheet was subsequently misplaced in the PTO. Therefore, the application is complete and entitled to a filing date of February 26, 2004.

In view of the above, the petition is **granted**. The copy of the drawing sheet submitted with the petition will be used for examination purposes.

The Notice mailed September 22, 2004, was sent in error and is hereby vacated.

The Office will refund $455 to petitioner's deposit account. As of November 1, 2004, the fee for a petition under 37 CFR 1.53 was raised to $400.[2] Therefore, $400 was charged to petitioner's deposit account for the petition. Since the petition is granted, the $400 will be refunded. One may not obtain an extension of time when replying to a Notice of Incomplete Nonprovisional Application. Since the time may not be extended, the $55 extension of time fee will be credited back to petitioner's deposit account. Per 37 CFR 1.181(f), the Office *may* dismiss any paper filed beyond the period for reply as untimely. The Office chooses not to dismiss the paper as timely.

---

[1] Evidence of receipt of any correspondence filed in the Patent and Trademark Office can be obtained by submitting a self addressed post card properly itemizing and identifying the paper or papers being filed. Upon receipt of the correspondence, the Patent and Trademark Office will check the listing on the post card against the papers submitted, making sure that all items listed are present and will then stamp the postcard with an Official date stamp and place the post card in the outgoing mail. "A post card receipt which itemizes and properly identifies the papers which are being filed serves as *prima facie* evidence of receipt in the PTO of all items listed thereon by the PTO." M.P.E.P. § 503.

[2] See Revision of Patent Fees for Fiscal Year 2005, 69 Fed. Reg. 52604 (Aug. 27, 2004) and Changes to Support Implementation of the United States Patent and Trademark Office 21st Century Strategic Plan, 1287 Off. Gaz. Pat. Office 67 (Oct. 12, 2004).

The Application is being returned to the Office of Initial Patent Examination for further processing with a filing date of February 26, 2004, using the application papers filed on February 26, 2004, and the copy of the one drawing sheet filed on December 2, 2004.

Telephone inquiries should be directed to Petitions Attorney Steven Brantley at (571) 272-3203.

Charles Steven Brantley
Senior Petitions Attorney
Office of Petitions

UNITED STATES PATENT AND TRADEMARK OFFICE

Commissioner for Patents
United States Patent and Trademark Office
P.O. Box 1450
Alexandria, VA 22313-1450
www.uspto.gov

BERKELEY LAW & TECHNOLOGY GROUP
5250 NE ELAM YOUNG PARKWAY
SUITE 850
HILLSBORO, OR 97124

COPY MAILED

JUN 24 2005

OFFICE OF PETITIONS

In re Application of :
Ashfaq Shaikh, et al. :
Application No. 10/787,923 : ON PETITION
Filed: February 25, 2004 :
Attorney Docket No. 004.P005 :

This is a decision on the petition under 37 CFR 1.137(b), filed April 18, 2005, to revive the above-identified application.

The application became abandoned for failure to timely respond to a Notice to File Corrected Application Papers mailed May 20, 2004, requiring replacement drawings in compliance with 37 CFR 1.84 and 37 CFR 1.121. A Notice of Abandonment was mailed February 23, 2005. In response, on April 18, 2005, the present petition was filed, along with replacement drawings.

The petition is found to comply with the requirements of 37 CFR 1.137(b). Accordingly, the petition is **GRANTED**.

The application is being referred to the Office of Initial Patent Examination (OIPE) for review of the drawings provided April 18, 2005.

Telephone inquires related to this decision should be directed to the undersigned at (571) 272-3204. Telephone inquiries related to OIPE processing should be directed to their hotline at (703) 308-1202.

Sherry D. Brinkley
Petitions Examiner
Office of Petitions
Office of the Deputy Commissioner
for Patent Examination Policy

UNITED STATES PATENT AND TRADEMARK OFFICE

Commissioner for Patents
United States Patent and Trademark Office
P.O. Box 1450
Alexandria, VA 22313-1450
www.uspto.gov

FEB 02 2009

Docket Clerk
P.O. Drawer 800889
Dallas, TX 75380

In re Application of	:	
Paul Kelley, et al.	:	DECISION ON PETITION
Application No. 10/787,936	:	UNDER 37 CFR §1.144
Filed: February 27, 2004	:	
For: SELF-LOCKING ANTI-PILFER GATE FOR A VENDING MACHINE	:	

This is a decision on the petition under 37 CFR 1.144 filed March 11, 2008, and resubmitted April 24, 2008 for review of a Restriction Requirement mailed January 9, 2007.

The petition is **GRANTED**.

This application was filed February 27, 2004 and included claims 1-19 directed toward "A vending machine", and claims 20-22 directed toward "A method of dispensing product". On January 9, 2007, the Examiner mailed a Restriction Requirement between Invention I, recited in claims 3-4, Invention II recited in claims 5-7, Invention III, recited in claims 8-16, Invention IV recited in claim 18, Invention V, recited in claim 19, and Invention VI, recited in claims 20-22. The Examiner alleged that Inventions I, II, III, IV, and V, are related as sub-combinations disclosed as usable together in a single combination. Furthermore the Examiner alleged that Inventions I-V and Invention VI are related as apparatus and process for its practice. In response to the Restriction Requirement, on February 12, 2007, Petitioner elected Invention I, claims 3-4, but traversed the Restriction Requirement stating that the claims of Inventions I-V are not related as subcombinations usable together in a single combination, but are instead variants of common claimed subject matter. On June 18, the Examiner mailed a Non-final Office Action withdrawing claims 5-16 and 18-22, making the Restriction Requirement Final, and treating claims 1-4 and 17 on the merits. On September 21, 2007, Petitioner responded to the Non-final Office Action traversing the Examiner's rejections, cancelling claims 5-16 and 18-22, and adding new claims 23-37. On December 17, 2007, the Examiner mailed a Final Office Action withdrawing claims 23-37 as directed to non-elected Invention II and maintaining rejections of claims 1-4 and 17. On April 24, 2008, Petitioner

filed a Petition pursuant to 37 C.F.R. § 1.144 for review of the Restriction Requirement.

M.P.E.P. § 806.05(d) states, "Two or more claimed subcombinations, disclosed as usable together in a single combination, and which can be shown to be separately usable, are usually restrictable when the subcombinations do not overlap in scope and are not obvious variants."

In this application, original claims 3-4 and added claims 23-37 are directed toward "A vending machine". Therefore, at least original claims 3-4 and 23-37 overlap in scope and are not restrictable as subcombinations disclosed as usable together in a single combination. The Restriction Requirement is improper, and it is not in accordance with the guidelines in M.P.E.P. § 806.05(d).

The Restriction Requirement mailed January 9, 2007 is hereby withdrawn and prosecution reopened for reconsideration of improperly withdrawn claims 23-37. This application is being forwarded to the Examiner for continued prosecution in accordance with this Decision.

If the examiner determines that a requirement for restriction should be made in this application, the examiner must provide a clear and detailed record of the requirement by following the outline of Letter for Restriction Requirement provided in M.P.E.P. § 817.

Any questions regarding this Decision should be directed to Patrick Mackey at (571) 272-6916.

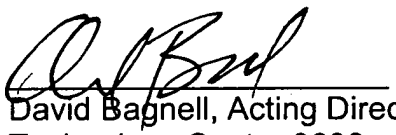

David Bagnell, Acting Director
Technology Center 3600
(571) 272-6999

TL

UNITED STATES PATENT AND TRADEMARK OFFICE

Commissioner for Patents
United States Patent and Trademark Office
P.O. Box 1450
Alexandria, VA 22313-1450
www.uspto.gov

STEPHEN B. DAVIS
BRISTOL-MYERS SQUIBB COMPANY
PATENT DEPARTMENT
P.O. BOX 4000
PRINCETON NJ 08543-4000

COPY MAILED

AUG 2 4 2005

OFFICE OF PETITIONS

In re Application of :
Albert J. Robichaud et al :
Application No. 10/787,941 : DECISION GRANTING PETITION
Filed: February 26, 2004 : UNDER 37 CFR 1.137(b)
Attorney Docket No. PH7217A CIP :

This is a decision on the petition under 37 CFR 1.137(b), filed June 23, 2005, to revive the above-identified application.

The petition is **GRANTED**.

The petition satisfies the conditions for revival pursuant to the provisions of 37 CFR 1.137(b) in that (1) the reply in the form of an amendment; (2) the petition fee; and (3) the required statement of unintentional delay have been received. Accordingly, the reply to the nonfinal Office action of August 18, 2004, is accepted as having been unintentionally delayed.

Telephone inquiries concerning this decision should be directed to the undersigned at (571) 272-3208.

This matter is being referred to Technology Center AU 1624.

Karen Creasy

Karen Creasy
Petitions Examiner
Office of Petitions
Office of the Deputy Commissioner
for Patent Examination Policy

UNITED STATES PATENT AND TRADEMARK OFFICE

Commissioner for Patents
United States Patent and Trademark Office
P.O. Box 1450
Alexandria, VA 22313-1450
www.uspto.gov

COPY MAILED

AUG 0 2 2007

OFFICE OF PETITIONS

Squire, Sanders & Dempsey, LLP
1 Maritime Plaza, Suite 300
San Francisco, CA 94111

In re Application of :
Umesh G. Bhatia et al. :
Application No. 10/787,967 : DECISION ON PETITION
Filed: February 25, 2004 : TO WITHDRAW
Attorney Docket No. 64462.00002 : FROM RECORD
:

This is a decision on the Request to Withdraw as attorney or agent of record under 37 C.F.R. § 1.36(b), filed May 4, 2007.

The request is **APPROVED**.

A grantable request to withdraw as attorney/agent of record must be signed by every attorney/agent seeking to withdraw or contain a clear indication that one attorney is signing on behalf of another/others. A request to withdraw will not be approved unless at least 30 (thirty) days would remain between the date of approval and the later of the expiration date of a time to file a response or the expiration date of the maximum time period which can be extended under 37 C.F.R. § 1.136(a).

The request was signed by Cameron Kerrigan on behalf of all attorneys of record who are associated with customer No. 44955. All attorneys/agents associated with the Customer Number 44955 have been withdrawn.

Applicant is reminded that there is no attorney of record at this time.

The request to change the correspondence of record is not acceptable as the requested correspondence address is not that of (1) the first named signing inventor; or (2) an intervening assignee of the entire interest under 37 C.F.R. 3.71. Accordingly, all correspondence will be mailed to the assignee at the address noted in the USPTO assignment records. A courtesy copy of this decision is being mailed to the address noted on the request to withdraw.

A final rejection was mailed on May 15, 2007, setting a three month shortened statutory period for reply. Extensions of time are available under the provisions of 37 CFR 1.136(b). Failure to timely file a proper reply will result in the abandonment of the application.

Telephone inquiries concerning this decision should be directed to Kimberly Inabinet at 571-272-4618.

Frances Hicks
Petitions Examiner
Office of Petitions

cc: Omni Genetics, Inc.
5212 Union Avenue
San Jose, CA 95124

cc: Umesh Bhatia
MedCare Labs, Inc.
25003 Pitkin Road, Ste. E888
The Woodlands, TX 77386

UNITED STATES PATENT AND TRADEMARK OFFICE

UNITED STATES DEPARTMENT OF COMMERCE
United States Patent and Trademark Office
Address: COMMISSIONER FOR PATENTS
P.O. Box 1450
Alexandria, Virginia 22313-1450
www.uspto.gov

APPLICATION NUMBER	FILING OR 371 (c) DATE	FIRST NAMED APPLICANT	ATTY. DOCKET NO./TITLE
10/787,967	02/25/2004	Umesh G. Bhatia	64462.00002

CONFIRMATION NO. 5932

OC000000025141662

44955
SQUIRE, SANDERS & DEMPSEY L.L.P.
1 MARITIME PLAZA, SUITE 300
SAN FRANCISCO, CA 94111

Date Mailed: 08/01/2007

NOTICE REGARDING CHANGE OF POWER OF ATTORNEY

This is in response to the Power of Attorney filed 05/04/2007.

- The withdrawal as attorney in this application has been accepted. Future correspondence will be mailed to the new address of record. 37 CFR 1.33.

Kimberly Brabrnet

Office of Initial Patent Examination (571) 272-4000, or 1-800-PTO-9199
FORMER ATTORNEY/AGENT COPY

UNITED STATES PATENT AND TRADEMARK OFFICE

UNITED STATES DEPARTMENT OF COMMERCE
United States Patent and Trademark Office
Address: COMMISSIONER FOR PATENTS
P.O. Box 1450
Alexandria, Virginia 22313-1450
www.uspto.gov

IBM CORPORATION
INTELLECTUAL PROPERTY LAW
11501 BURNET ROAD
AUSTIN, TX 78758

Mail Date: 04/20/2010

Applicant	: Michael W. Brown	: DECISION ON REQUEST FOR
Patent Number	: 7596285	: RECALCULATION of PATENT
Issue Date	: 09/29/2009	: TERM ADJUSTMENT IN VIEW
Appliction No	: 10/787,981	: OF WYETH AND NOTICE OF INTENT TO
Filed	: 02/26/2004	: ISSUE CERTIFICATE OF CORRECTION
		:

The Request for Recalculation is **GRANTED** to the extent indicated.

The patent term adjustment has been determined to be **1152** days. The USPTO will *sua sponte* issue a certificate of correction reflecting the amount of PTA days determined by the recalculation.

Prior to the issuance of the certificate of correction, the USPTO will afford patentee an opportunity to be heard and request reconsideration. Accordingly, patentee has **one month or thirty (30) days**, whichever is longer, to file a request for reconsideration of this patent term adjustment calculation. See 35 U.S.C. 154(b)(3)(B)(ii) and 37 CFR 1.322(a)(4). No extensions of time will be granted under 37 CFR 1.136.

Patentee should use document code PET.OP if electronically filing a request for reconsideration of this patent term adjustment calculation. The patentee must also include the information required by 37 CFR 1.705(b)(2) and the fee required by 37 CFR 1.18(e). If patentee does not file a timely request for reconsideration of this patent term adjustment calculation including the information required by 37 CFR 1.705(b)(2) and the fee required by 37 CFR 1.18(e), the USPTO will issue a certificate of correction reflecting the PTA determination noted above.

Patentee should be aware that in order to preserve the right to review in the United States District Court for the District of Columbia of the USPTO patent term adjustment determination, patentee must ensure that he or she also take the steps required under 35 U.S.C. 154(b)(4)(A) in a timely manner. Nothing in the request for recalculation should be construed as providing an alternative time frame for commencing a civil action under 35 U.S.C. 154(b)(4)(A).

Any questions concerning this decision should be directed to the Office of Patent Legal Administration at 571-272-7702.

UNITED STATES PATENT AND TRADEMARK OFFICE

UNITED STATES DEPARTMENT OF COMMERCE
United States Patent and Trademark Office
Address: COMMISSIONER FOR PATENTS
P.O. Box 1450
Alexandria, Virginia 22313-1450
www.uspto.gov

Kraguljac & Kalnay, LLC - Oracle
4700 Rockside Road
Summit One, Suite 510
Independence, OH 44131

Mail Date: 04/20/2010

Applicant	: Vebhhav Singh	: DECISION ON REQUEST FOR
Patent Number	: 7636362	: RECALCULATION of PATENT
Issue Date	: 12/22/2009	: TERM ADJUSTMENT IN VIEW
Appliction No	: 10/787,995	: OF WYETH AND NOTICE OF INTENT TO
Filed	: 02/26/2004	: ISSUE CERTIFICATE OF CORRECTION
		:

The Request for Recalculation is **GRANTED** to the extent indicated.

The patent term adjustment has been determined to be **1481** days. The USPTO will *sua sponte* issue a certificate of correction reflecting the amount of PTA days determined by the recalculation.

Prior to the issuance of the certificate of correction, the USPTO will afford patentee an opportunity to be heard and request reconsideration. Accordingly, patentee has **one month or thirty (30) days**, whichever is longer, to file a request for reconsideration of this patent term adjustment calculation. See 35 U.S.C. 154(b)(3)(B)(ii) and 37 CFR 1.322(a)(4). No extensions of time will be granted under 37 CFR 1.136.

Patentee should use document code PET.OP if electronically filing a request for reconsideration of this patent term adjustment calculation. The patentee must also include the information required by 37 CFR 1.705(b)(2) and the fee required by 37 CFR 1.18(e). If patentee does not file a timely request for reconsideration of this patent term adjustment calculation including the information required by 37 CFR 1.705(b)(2) and the fee required by 37 CFR 1.18(e), the USPTO will issue a certificate of correction reflecting the PTA determination noted above.

Patentee should be aware that in order to preserve the right to review in the United States District Court for the District of Columbia of the USPTO patent term adjustment determination, patentee must ensure that he or she also take the steps required under 35 U.S.C. 154(b)(4)(A) in a timely manner. Nothing in the request for recalculation should be construed as providing an alternative time frame for commencing a civil action under 35 U.S.C. 154(b)(4)(A).

Any questions concerning this decision should be directed to the Office of Patent Legal Administration at 571-272-7702.

UNITED STATES PATENT AND TRADEMARK OFFICE

Commissioner for Patents
United States Patent and Trademark Office
P.O. Box 1450
Alexandria, VA 22313-1450
www.uspto.gov

TOWNSEND AND TOWNSEND AND CREW, LLP
TWO EMBARCADERO CENTER
EIGHTH FLOOR
SAN FRANCISCO CA 94111-3834

COPY MAILED

AUG 0 6 2007

OFFICE OF PETITIONS

In re Application of :
Suzuki, et al. :
Application No. 10/788,004 : ON PETITION
Filed: February 25, 2004 :
Attorney Docket No. 025847-000900US :

This is a decision on the petition to revive under 37 CFR 1.137(b), filed July 16, 2007.

The petition under 37 CFR 1.137(b) is **GRANTED**.

The above-identified application became abandoned for failure to timely pay the issue fee in response to the Notice of Allowance mailed December 28, 2006. This Notice set a statutory period for reply of three (3) months. No issue fee having been received, the application became abandoned on March 29, 2007. A Notice of Abandonment was mailed on April 25, 2007.

With the instant petition, petitioner paid the petition fee, made the proper statement of unintentional delay, and submitted the required reply in the form of the issue fee.

The matter is being forwarded to the Office of Patent Publication for processing into a patent.

Telephone inquiries concerning this decision should be directed to the undersigned at 571-272-3207.

Cliff Congo
Petitions Attorney
Office of Petitions

UNITED STATES PATENT AND TRADEMARK OFFICE

Commissioner for Patents
United States Patent and Trademark Office
P.O. Box 1450
Alexandria, VA 22313-1450
www.uspto.gov

SANDIA CORPORATION
P O BOX 5800
MS-0161
ALBUQUERQUE NM 87185-0161

COPY MAILED

JUN 19 2008

OFFICE OF PETITIONS

In re Application of :
Coker :
Application No. 10/788,017 : ON PETITION
Filed: February 25, 2004 :
Attorney Docket No. SD7682/S103558 :
For: METAL NANOPARTICLES AS A CONDUCTIVE CATALYST

This is a decision on the petition filed March 6, 2008 under 37 CFR 1.181 to withdraw the holding of abandonment.

The petition is **DISMISSED**.

Any reconsideration petition must be submitted within TWO (2) MONTHS from the mail date of this decision. Extensions of time under 37 CFR 1.136(a) are permitted. This is **not** final agency action within the meaning of 5 U.S.C. § 704.

This application was held abandoned for failure to respond in a timely manner to the Notice of Allowance and Fee(s) Due, mailed October 30, 2007, which set forth a non-extendable three (3) month period to submit the issue fee. No reply being received in the Office, the Office contended that this application became abandoned on January 31, 2007. A Notice of Abandonment was mailed on February 26, 2008.

Petitioner asserts a completed PTOL-85(B) and authorization to charge the issue fee to applicant's deposit account was filed via facsimile transmission on November 13, 2007. The Office has no record of receiving the PTOL-85(B).

Under 37 CFR 1.8(b), correspondence is considered timely filed if petitioners: supply (1) a copy of the previously transmitted correspondence with a signed certificate of transmission affixed thereto; (2) a statement which attests on a personal knowledge basis to the previous timely transmission; (3) a copy of the sending unit's report confirming transmission may be used to support this statement. (4) Furthermore, under 37 CFR 1.8(c), the Office may require additional evidence to determine if the correspondence was timely filed.

A review of the correspondence allegedly successfully transmitted to the Office on November 13, 2007 reveals that there is no certificate of transmission affixed to the correspondence. Thus, petitioner has not provided adequate evidence under 37 CFR 1.8(b) to warrant withdrawal of the holding of abandonment. It is noted that petitioner has not submitted an auto-reply facsimile transmission from the Office, showing that the Office received correspondence from petitioner on November 13, 2007.

The petition under 37 CFR 1.181 is **DISMISSED**. Petitioner should consider filing a petition to revive.

Further correspondence with respect to this matter should be addressed as follows:

By mail: Mail Stop PETITION
Commissioner for Patents
Post Office Box 1450
Alexandria, VA 22313-1450

By hand: U.S. Patent and Trademark Office
Customer Service Window, Mail Stop Petition
Randolph Building
401 Dulany Street
Alexandria, VA 22314

By FAX: (571) 273-8300– ATTN: Office of Petitions

Telephone inquiries pertaining to this matter may be directed to the undersigned at (571) 272-3230.

Shirene Willis Brantley
Senior Petitions Attorney
Office of Petitions
Office of the Deputy Commissioner
for Patent Examination Policy

UNITED STATES PATENT AND TRADEMARK OFFICE

Commissioner for Patents
United States Patent and Trademark Office
P.O. Box 1450
Alexandria, VA 22313-1450
www.uspto.gov

SANDIA CORPORATION
P O BOX 5800
MS-0161
ALBUQUERQUE NM 87185-0161

COPY MAILED

OCT 23 2009

OFFICE OF PETITIONS

In re Application of :
Coker :
Application No. 10/788,017 : ON PETITION
Filed: February 25, 2004 :
Attorney Docket No. SD7682/S103558 :
For: METAL NANOPARTICLES AS A CONDUCTIVE CATALYST

This is a decision on the renewed petition, filed June 26, 2008, under 37 CFR 1.181 to withdraw the holding of abandonment. The renewed petition was only recently forwarded to the Office of Petitions.

The petition is **DISMISSED**.

Any reconsideration petition must be submitted within TWO (2) MONTHS from the mail date of this decision. Extensions of time under 37 CFR 1.136(a) are permitted. This is **not** final agency action within the meaning of 5 U.S.C. § 704.

This application was held abandoned for failure to respond in a timely manner to the Notice of Allowance and Fee(s) Due, mailed October 30, 2007, which set forth a non-extendable three (3) month period to submit the issue fee. No reply being received in the Office, the Office contended that this application became abandoned on January 31, 2007. A Notice of Abandonment was mailed on February 26, 2008.

Petitioner asserts a completed PTOL-85(B) and authorization to charge the issue fee to applicant's deposit account was filed via facsimile transmission on November 13, 2007. The Office has no record of receiving the PTOL-85(B).

Under 37 CFR 1.8(b), correspondence is considered timely filed if petitioners: supply (1) a copy of the previously transmitted correspondence with a signed certificate of transmission affixed thereto; (2) a statement which attests on a personal knowledge basis to the previous timely transmission; (3) a copy of the sending unit's report confirming transmission may be used to support this statement. (4) Furthermore, under 37 CFR 1.8(c), the Office may require additional evidence to determine if the correspondence was timely filed.

A review of the correspondence allegedly successfully transmitted to the Office on November 13, 2007 reveals that there is no certificate of transmission affixed to the correspondence.

The provisions of 37 CFR 1.8(b) apply only when applicants have utilized certificate of facsimile transmission practice. As noted above, applicants did not utilize certificate of transmission practice. An applicant alleging that a paper was filed in the Office and later misplaced has the burden of proving the allegation by a preponderance of the evidence. In this regard, declarations by individuals involved in the preparation and transmission of the correspondence reciting their personal recollection or belief of what was contained in the correspondence that they reviewed and/or transmitted are no more persuasive of what was actually transmitted than the contents of the official record. Such declarations, as in this case, are usually made months after the actual events recited. Viola P. Campos' statement was created more than 7 months after the alleged transmission and cannot prove the transmission of the PTOL-85(B) occurred. A copy of the sending unit's report confirming transmission can be used to support the statement regarding the previous timely transmission. However, a sending unit report is not the same as an auto-reply facsimile transmission from the Office or other Office generated receipt. A sending unit's report can only buttress a statement regarding the previous timely transmission. It cannot make up for a lack of a proper certificate of transmission.

In short, petitioner **cannot** provide adequate evidence under 37 CFR 1.8(b) to warrant withdrawal of the holding of abandonment.

The petition under 37 CFR 1.181 is **DISMISSED**.

A "reasonably prudent person" would file papers or fees in compliance with 37 CFR 1.8 or 1.10 to ensure their timely filing in the PTO, as well as preserve adequate evidence of such filing. A delay caused by an applicant's failure to file papers or fees in compliance with 37 CFR 1.8 and 1.10 does not constitute "unavoidable" delay. See Krahn v. Commissioner, 15 USPQ2d 1823, 1825, (E.D. Va 1990); see also MPEP 711.03(c)(III)(C)(2)

Petitioner is encouraged to file a petition to revive under the unintentional delay standard of 37 CFR 1.137(b).

Further correspondence with respect to this matter should be addressed as follows:

By mail: Mail Stop PETITION
Commissioner for Patents
Post Office Box 1450
Alexandria, VA 22313-1450

By hand: U.S. Patent and Trademark Office
Customer Service Window, Mail Stop Petition
Randolph Building
401 Dulany Street
Alexandria, VA 22314

By FAX: (571) 273-8300– ATTN: Office of Petitions

Telephone inquiries pertaining to this matter may be directed to the undersigned at (571) 272-3230.

Shirene Willis Brantley
Senior Petitions Attorney
Office of Petitions
Office of the Deputy Commissioner
for Patent Examination Policy

UNITED STATES PATENT AND TRADEMARK OFFICE

Commissioner for Patents
United States Patent and Trademark Office
P.O. Box 1450
Alexandria, VA 22313-1450
www.uspto.gov

SANDIA CORPORATION
P O BOX 5800
MS-0161
ALBUQUERQUE NM 87185-0161

MAILED

MAR 2 9 2010

OFFICE OF PETITIONS

In re Application of :
Coker :
Application No. 10/788,017 : ON PETITION
Filed: February 25, 2004 :
Attorney Docket No. SD7682/S103558 :
For: METAL NANOPARTICLES AS A CONDUCTIVE CATALYST

This is a decision on the renewed petition, filed November 20, 2009, under 37 CFR 1.181 to withdraw the holding of abandonment.

The petition is **DISMISSED**.

Any reconsideration petition must be submitted within TWO (2) MONTHS from the mail date of this decision. Extensions of time under 37 CFR 1.136(a) are permitted. This is **not** final agency action within the meaning of 5 U.S.C. § 704.

This application was held abandoned for failure to respond in a timely manner to the Notice of Allowance and Fee(s) Due, mailed October 30, 2007, which set forth a non-extendable three (3) month period to submit the issue fee. No reply being received in the Office, the Office contended that this application became abandoned on January 31, 2007. A Notice of Abandonment was mailed on February 26, 2008.

Petitioner asserts a completed PTOL-85(B) and authorization to charge the issue fee to applicant's deposit account was filed via facsimile transmission on November 13, 2007. The Office has no record of receiving the PTOL-85(B). In the instant reconsideration petition, petitioner has provided evidence that the issue for the above-identified application was charged to petitioner's deposit account on March 7, 2008.

Under 37 CFR 1.8(b), correspondence is considered timely filed if petitioners: supply (1) a copy of the previously transmitted correspondence with a signed certificate of transmission affixed thereto; (2) a statement which attests on a personal knowledge basis to the previous timely transmission; (3) a copy of the sending unit's report confirming transmission may be used to support this statement. (4) Furthermore, under 37 CFR 1.8(c), the Office may require additional evidence to determine if the correspondence was timely filed.

A review of the correspondence allegedly successfully transmitted to the Office on November 13, 2007 reveals that there is no certificate of transmission affixed to the correspondence. Petitioner has confirmed that certificate of mailing practice was not utilized when the correspondence was transmitted to the Office.

The provisions of 37 CFR 1.8(b) apply only when applicants have utilized certificate of facsimile transmission practice. As noted above, applicants did not utilize certificate of transmission practice. An applicant alleging that a paper was filed in the Office and later misplaced has the burden of proving the allegation by a preponderance of the evidence. In this regard, declarations by individuals involved in the preparation and transmission of the correspondence reciting their personal recollection or belief of what was contained in the correspondence that they reviewed and/or transmitted are no more persuasive of what was actually transmitted than the contents of the official record. Such declarations, as in this case, are usually made months after the actual events recited. Viola P. Campos' statement was created more than 7 months after the alleged transmission and cannot prove the transmission of the PTOL-85(B) occurred. A copy of the sending unit's report confirming transmission can be used to support the statement regarding the previous timely transmission. However, a sending unit report is not the same as an auto-reply facsimile transmission from the Office or other Office generated receipt. A sending unit's report can only buttress a statement regarding the previous timely transmission. It cannot make up for a lack of a proper certificate of transmission.

The fact that the Office charged the issue fee to petitioner's deposit account on March 7, 2008 does not establish that the issue fee transmittal was timely transmitted to and received by the Office on November 13, 2007.

As stated in the October 23, 2009 decision on petition, "... [P]etitioner **cannot** provide adequate evidence under 37 CFR 1.8(b) to warrant withdrawal of the holding of abandonment."

The petition under 37 CFR 1.181 is **DISMISSED**.

A "reasonably prudent person" would file papers or fees in compliance with 37 CFR 1.8 or 1.10 to ensure their timely filing in the PTO, as well as preserve adequate evidence of such filing. A delay caused by an applicant's failure to file papers or fees in compliance with 37 CFR 1.8 and 1.10 does not constitute "unavoidable" delay. See Krahn v. Commissioner, 15 USPQ2d 1823, 1825, (E.D. Va 1990); see also MPEP 711.03(c)(III)(C)(2)

Petitioner is strongly encouraged to file a petition to revive under the unintentional delay standard of 37 CFR 1.137(b).

Further correspondence with respect to this matter should be addressed as follows:

By mail: Mail Stop PETITION
Commissioner for Patents
Post Office Box 1450
Alexandria, VA 22313-1450

By hand: U.S. Patent and Trademark Office
Customer Service Window, Mail Stop Petition
Randolph Building
401 Dulany Street
Alexandria, VA 22314

By FAX: (571) 273-8300– ATTN: Office of Petitions

Telephone inquiries pertaining to this matter may be directed to the undersigned at (571) 272-3230.

Shirene Willis Brantley

Shirene Willis Brantley
Senior Petitions Attorney
Office of Petitions
Office of the Deputy Commissioner
for Patent Examination Policy

UNITED STATES PATENT AND TRADEMARK OFFICE

Commissioner for Patents
United States Patent and Trademark Office
P.O. Box 1450
Alexandria, VA 22313-1450
www.uspto.gov

SANDIA CORPORATION
PO BOX 5800
MS-0161
ALBUQUERQUE NM 87185-0161

MAILED

JUN 29 2010

OFFICE OF PETITIONS

In re Application of
Eric N. Coker
Application No. 10/788,017
Filed: February 25, 2004
Attorney Docket No. SD7682/S103558

DECISION ON PETITION

This is a decision on the petition under the unintentional provisions of 37 CFR 1.137(b), filed April 9, 2010, to revive the above-identified application.

The petition is **GRANTED**.

The petition satisfies the conditions for revival pursuant to the provisions of 37 CFR 1.137(b) in that (1) the reply in the form of the issue fee; (2) the petition fee; and (3) the required statement of unintentional delay have been received. Accordingly, the reply to the Notice of Allowance mailed October 30, 2007, is accepted as having been unintentionally delayed.

Telephone inquiries concerning this decision should be directed to the undersigned at (571) 272-3208.

This application is being referred to the Office of Data Management to be processed into a patent.

/KOC/
Karen Creasy
Petitions Examiner
Office of Petitions

UNITED STATES PATENT AND TRADEMARK OFFICE

COMMISSIONER FOR PATENTS
UNITED STATES PATENT AND TRADEMARK OFFICE
P.O. BOX 1450
ALEXANDRIA, VA 22313-1450
www.uspto.gov
DIW Sep-08

INTELLECTUAL PROPERTY LAW DEPT.
IBM CORPORATION
11400 BURNET ROAD
AUSTIN TX 78758

COPY MAILED

SEP 23 2008

In re Application of :
Brown et al. :
Application Number: 10/788022 : DECISION ON PETITION
Filing Date: 02/26/2004 :
Attorney Docket Number: :
AUS920031031US1 :

This is a decision on the petition filed on August 8, 2008, under 37 CFR 1.137(b),[1] to revive the above-identified application.

The petition is **GRANTED**.

The application became abandoned on July 8, 2008, for failure to timely submit the issue and publication fees in response to the Notice of Allowance and Fee(s) Due mailed on April 7, 2008, which set a three (3)-month statutory period for reply. Notice of Abandonment was mailed on July 31, 2008.

Receipt of the issue and publication fees filed with the present petition is acknowledged.

---

[1] Effective December 1, 1997, the provisions of 37 CFR 1.137(b) now provide that where the delay in reply was unintentional, a petition may be filed to revive an abandoned application or a lapsed patent pursuant to 37 CFR 1.137(b). A grantable petition filed under the provisions of 37 CFR 1.137(b) must be accompanied by:

(1) the required reply, unless previously filed. In a nonprovisional application abandoned for failure to prosecute, the required reply may be met by the filing of a continuing application. In a nonprovisional utility or plant application filed on or after June 8, 1995, and abandoned for failure to prosecute, the required reply may also be met by the filing of a request for continuing examination in compliance with § 1.114. In an application or patent, abandoned or lapsed for failure to pay the issue fee or any portion thereof, the required reply must be the payment of the issue fee or any outstanding balance thereof. In an application abandoned for failure to pay the publication fee, the required reply must include payment of the publication fee.

(2) the petition fee as set forth in 37 CFR 1.17(m);

(3) a statement that the entire delay in filing the required reply from the due date for the reply until the filing of a grantable petition pursuant to 37 CFR 1.137(b) was unintentional. The Director may required additional information where there is a question whether the delay was unintentional; and

(4) any terminal disclaimer (and fee as set forth in 37 CFR 1.20(d)) required pursuant to 37 CFR 1.137(c)).

It is noted that the both the issue fee transmittal and the petitioner are signed by registered patent practitioner Reuben Bains, Reg. No. 46,532. The practitioner's Registration No. is miscaptioned as "4,532" on the petition, however. As the practitioner is of record, however, the petition is accepted as properly signed in the absence of the correct registration number. [2]

The address in the petition is different than the correspondence address. A courtesy copy of this decision is being mailed to the address in the petition. All future correspondence, however, will be mailed solely to the address of record. A change of correspondence address should be filed if the correspondence address needs to be updated.

This application is being referred to the Office of Data Management for processing into a patent.

Telephone inquiries concerning this matter may be directed to the undersigned at (571) 272-3231.

D Wood

Douglas I. Wood
Senior Petitions Attorney
Office of Petitions

Cc:

RUBEN S. BAINS
10333 RICHMOND AVENUE, SUITE 1100
HOUSTON TX 77042

[2] The registration number must be set forth in any paper filed by a practitioner acting in a representative capacity. See 37 CFR 1.34.

UNITED STATES PATENT AND TRADEMARK OFFICE

Commissioner for Patents
United States Patent and Trademark Office
P.O. Box 1450
Alexandria, VA 22313-1450
www.uspto.gov

INTELLECTUAL PROPERTY LAW DEPT.
IBM CORPORATION
11400 BURNET ROAD
AUSTIN, TX 78758

COPY MAILED

OCT 08 2008

OFFICE OF PETITIONS

In re Application of :
BROWN, et al. :
Application No. 10/788,022 : DECISION GRANTING PETITION
Filed: February 26, 2004 : UNDER 37 CFR 1.313(c)(2)
Attorney Docket No. AUS920031031US1 :

This is a decision on the petition under 37 CFR 1.313(c)(2), filed October 6, 2008, to withdraw the above-identified application from issue after payment of the issue fee.

The petition is GRANTED.

The above-identified application is withdrawn from issue for consideration of a submission under 37 CFR 1.114 (request for continued examination). *See* 37 CFR 1.313(c)(2).

Petitioner is advised that the issue fee paid on August 8, 2008 *cannot be refunded. If, however, this application is again allowed, petitioner may request that it be applied towards the issue fee required by the new Notice of Allowance.*[1]

The file does not indicate a change of address has been submitted, although the address given on the petition differs from the address of record. If appropriate, a change of address should be filed in accordance with MPEP 601.03. A courtesy copy of this decision is being mailed to the address given on the petition; however, the office will mail all future correspondence solely to the address of record.

Telephone inquiries should be directed to the undersigned at (571) 272-7253.

This application is being referred to Technology Center AU 2154 for processing of the request for continued examination under 37 CFR 1.114 and for consideration of the concurrently filed information disclosure statement.

Monica A. Graves
Petitions Examiner
Office of Petitions

[1] *The request to apply the issue fee to the new Notice may be satisfied by completing and returning the new Part B – Fee(s) Transmittal Form (along with any balance due at the time of submission). Petitioner is advised that the Issue Fee Transmittal Form must be completed and timely submitted to avoid abandonment of the application.*

SPE RESPONSE FOR CERTIFICATE OF CORRECTION

Paper No.: _____

DATE : 12/1/2005

TO SPE OF : ART UNIT 3600(3636)

SUBJECT : Request for Certificate of Correction on Patent No.: 6,935,685

A response is requested with respect to the accompanying request for a certificate of correction.

Please complete this form and return with file, within 7 days to:
Certificates of Correction Branch - PK 3-922
Palm location **7580** - Tel. No. 305-8309

With respect to the change(s) requested, correcting Office and/or Applicant's errors; should the patent read as shown in the certificate of correction? No new matter should be introduced, nor should the scope or meaning of the claims be changed.

Okay to replace drawings as requested in C of C?

Ernest C. White, LIE305-8339
Thank You For Your Assistance **Certificates of Correction Branch**

The request for issuing the above-identified correction(s) is hereby:
Note your decision on the appropriate box.

☑ **Approved**	**All** changes apply.
☐ **Approved in Part**	Specify below which changes **do not** apply.
☐ **Denied**	State the reasons for denial below.

Comments:

Publications Branch used the wrong set of drawings when printing the Patent. Figures 1-2 lack the prior art label. So it is okay to replace the drawings. Thanks, Examiner R. White

_____ 3636
SPE **Art Unit**

UNITED STATES PATENT AND TRADEMARK OFFICE

Commissioner for Patents
United States Patent and Trademark Office
P.O. Box 1450
Alexandria, VA 22313-1450
www.uspto.gov

HUNTON & WILLIAMS LLP
INTELLECTUAL PROPERTY DEPARTMENT
1900 K STREET, N.W.
SUITE 1200
WASHINGTON DC 20006-1109

COPY MAILED

OCT 0 2 2006

OFFICE OF PETITIONS

In re Application of :
Andrew D. Mashino :
Application No. 10/788,034 : DECISION ON PETITION
Filed: February 27, 2004 : TO WITHDRAW
Attorney Docket No. 44904.000720 : FROM RECORD
:

This is a decision on the Request to Withdraw as attorney or agent under 37 C.F.R. § 1.36(b) or 37 C.F.R. § 10.40 filed November 14, 2005.

The request is **NOT APPROVED**.

A grantable request to withdraw as attorney/agent of record must be signed by every attorney/agent seeking to withdraw or contain a clear indication that one attorney is signing on behalf of attorneys/agents associated with customer number 21967. A request to withdraw will not be approved unless at least 30 (thirty) days would remain between the date of approval and the later of the expiration date of a time to file a response or the expiration date of the maximum time period which can be extended under 37 C.F.R. § 1.136(a).

The request cannot be approved because The Office cannot approve the request at this time since the reasons provided do not meet any of the conditions under the mandatory or permissive categories enumerated in 37 CFR 10.40. Section 10.40 of Title 37 of the Code of Federal Regulation states, "[a] practitioner shall not withdraw from employment in a proceeding before the Office without permission from the Office[.]" More specifically, 37 CFR 10.40 states, "[i]f paragraph (b) of this section is not applicable, a practitioner may not request permission to withdraw in matter pending before the Office unless such request or such withdrawal is" for one the permissive reasons listed in 37 CFR 10.40(c). The reasons set forth in the request, do not meet any the conditions set forth in 37 CFR 10.40.

Telephone inquiries concerning this decision should be directed to Charles Smoot 571-272-329

David Bucci
Petitions Examiner
Office of Petition

UNITED STATES PATENT AND TRADEMARK OFFICE

Commissioner for Patents
United States Patent and Trademark Office
P.O. Box 1450
Alexandria, VA 22313-1450
www.uspto.gov

OGILVY RENAULT LLP (PWC)
1981 MCGILL COLLEGE AVENUE
SUITE 1600
MONTREAL QC H3A 2Y3 CA CANADA

COPY MAILED

FEB 19 2009

OFFICE OF PETITIONS

In re Application of :
Harris Shafique et al :
Application No.10/788,040 : DECISION ON PETITION
Filed: February 27, 2004 :
Attorney Docket No. 2993-551US RM/JR/as :

This is a decision on the petition under the unintentional provisions of 37 CFR 1.137(b), filed January 14, 2009, to revive the above-identified application.

The petition is **GRANTED**.

The petition satisfies the conditions for revival pursuant to the provisions of 37 CFR 1.137(b) in that (1) the reply; (2) the petition fee; and (3) the required statement of unintentional delay have been received. Accordingly, the reply to the nonfinal rejection mailed August 24, 2007, is accepted as having been unintentionally delayed.

An extension of time under 37 CFR 1.136 must be filed prior to the expiration of the maximum extendable period for reply. *See* In re Application of S., 8 USPQ2d 1630, 1631 (Comm'r Pats. 1988). Since the $1,110.00 extension of time fee submitted with the petition on January 14, 2009, was subsequent to the maximum extendable period for reply, this fee is unnecessary and will be credited to petitioner's deposit account.

Telephone inquiries concerning this decision should be directed to the undersigned at (571) 272-3208.

This application is being referred to Technology Center AU 3741 for appropriate action by the Examiner in the normal course of business.

Karen Creasy

Karen Creasy
Petitions Examiner
Office of Petitions

UNITED STATES PATENT AND TRADEMARK OFFICE

Commissioner for Patents
United States Patent and Trademark Office
P.O. Box 1450
Alexandria, VA 22313-1450
www.uspto.gov

APP 1 8 2006

FINNEGAN, HENDERSON, FARABOW, GARRETT
& DUNNER, LLP
901 NEW YORK AVENUE, NW
WASHINGTON DC 20001-4413

In re Application of	:
Ger-Jan C. M. Sanderink et al	:
Serial No.: 10/788,041	: PETITION TO MAKE SPECIAL
Filed: November 9, 2005	:
Attorney Docket No.: 20342/1202326	:

This is in response to applicants' petition filed March 27, 2006, to make the above-identified application special under the provisions of 37 CFR 1.102(d).

Applicant has satisfied the provisions set forth in M.P.E.P. 708.02, VIII. Therefor the petition is **GRANTED**.

The following condition applies to the grant of this petition: If, upon examination, it is determined that a restriction requirement is necessary because of multiple inventions being claimed, applicant will be required to make an election without traverse of a single invention to be prosecuted. Failure to make an election without traverse will void the special status accorded in this decision.

The application will be forwarded the examiner for action on the merits commensurate with this decision.

Should there be any questions with regard to this letter please contact William R. Dixon, Jr. by letter addressed to the Director, Technology Center 1600, P.O. Box 1450, Alexandria, VA 22313-1450, or by telephone at 571-272-0519 or by facsimile transmission at the general Office facsimile number, 571-273-8300.

William R. Dixon, Jr.
Special Program Examiner
Technology Center 1600

UNITED STATES PATENT AND TRADEMARK OFFICE

UNITED STATES DEPARTMENT OF COMMERCE
United States Patent and Trademark Office
Address: COMMISSIONER FOR PATENTS
P.O. Box 1450
Alexandria, Virginia 22313-1450
www.uspto.gov

APPLICATION NO.	FILING DATE	FIRST NAMED INVENTOR	ATTORNEY DOCKET NO.	CONFIRMATION NO.
10/788,044	02/25/2004	Mark Munson	02020.012US1	3802

69035 7590 06/15/2010

ARRAY BIOPHARMA, INC.
3200 WALNUT STREET
BOULDER, CO 80301

EXAMINER
ANDERSON, REBECCA L

ART UNIT	PAPER NUMBER
1626	

NOTIFICATION DATE	DELIVERY MODE
06/15/2010	ELECTRONIC

Please find below and/or attached an Office communication concerning this application or proceeding.

The time period for reply, if any, is set in the attached communication.

Notice of the Office communication was sent electronically on above-indicated "Notification Date" to the following e-mail address(es):

JMESSER@ARRAYBIOPHARMA.COM
selsberry@arraybiopharma.com
docketing@arraybiopharma.com

SPE RESPONSE FOR CERTIFICATE OF CORRECTION

Paper No.:20100608

DATE : June 08, 2010

TO SPE OF : ART UNIT 1626

SUBJECT : Request for Certificate of Correction on Patent No.: 7,521,427

A response is requested with respect to the accompanying request for a certificate of correction.

Please complete this form and return with file, within **7** days to:
Certificates of Correction Branch - ST (South Tower) 9A22
Palm location **7590** - Tel. No. (703) 305-8309

With respect to the change(s) requested, correcting Office and/or Applicant's errors, should the patent read as shown in the certificate of correction? No new matter should be introduced, nor should the scope or meaning of the claims be changed.

Thank You For Your Assistance **Certificates of Correction Branch**

The request for issuing the above-identified correction(s) is hereby:

Note your decision on the appropriated box.

☒ **Approved** All changes apply.

☐ **Approved in Part** Specify below which changes **do not** apply.

☐ **Denied** State the reasons for denial below.

Comments:

/Joseph K. McKane/
Supervisory Patent Examiner, Art Unit 1626

UNITED STATES PATENT AND TRADEMARK OFFICE

Commissioner for Patents
United States Patent and Trademark Office
P.O. Box 1450
Alexandria, VA 22313-1450
www.uspto.gov

KIMBERLY-CLARK WORLDWIDE, INC.
CATHERINE E. WOLF
401 NORTH LAKE STREET
NEENAH, WI 54956

COPY MAILED

APR 17 2008

OFFICE OF PETITIONS

In re Application of :
Debra N. Welchel et al :
Application No. 10/788,050 : ON PETITION
Filed: February 26, 2004 :
Attorney Docket No. 18586 :

This is a decision on the petition filed November 23, 2007 under 37 CFR 1.137(b), to revive the above-identified application.

The petition is **GRANTED.**

The petition satisfies the conditions for revival pursuant to the provisions of 37 CFR 1.137(b) in that (1) the reply in the form of payment of the formal drawings; (2) the petition fee; and (3) the required statement of unintentional delay have been received. Accordingly, the issue fee is accepted as having been unintentionally delayed.

Telephone inquiries concerning this decision should be directed to the undersigned at (571) 272-3210.

This matter is being referred to the Publishing Division for further processing.

Irvin Dingle
Petitions Examiner
Office of Petitions

UNITED STATES PATENT AND TRADEMARK OFFICE

Commissioner for Patents
United States Patent and Trademark Office
P.O. Box 1450
Alexandria, VA 22313-1450
www.uspto.gov

F. CHAU & ASSOCIATES, LLC
130 WOODBURY ROAD
WOODBURY, NY 11797

COPY MAILED

MAY 21 2007

OFFICE OF PETITIONS

In re Application of	:	
Takeshi Asano et al	:	
Application No. 10/788,056	:	ON PETITION
Filed: February 26, 2004	:	
Attorney Docket No. JP920030010US1 (L8728-808	:	

This is a decision on the petition under 37 CFR 1.137(b), filed January 16, 2007, to revive the above-identified application.

The petition is **GRANTED**.

The above-identified application became abandoned for failure to reply in a timely manner to the non-final Office action mailed October 17, 2005, which set a shortened statutory period for reply of three (3) months. No extension of time under the provisions of 37 CFR 1.136(a) were obtained. Accordingly, the above-identified application became abandoned on January 18, 2006.

Telephone inquiries concerning this decision should be directed to Irvin Dingle at (571) 272-3210.

This matter is being referred to Technology Center AU 2821 for further processing.

Irvin Dingle
Petitions Examiner
Office of Petitions

UNITED STATES PATENT AND TRADEMARK OFFICE

COMMISSIONER FOR PATENTS
UNITED STATES PATENT AND TRADEMARK OFFICE
WASHINGTON, D.C. 20231
www.uspto.gov

APPLICATION NUMBER	FILING/RECEIPT DATE	FIRST NAMED APPLICANT	ATTORNEY DOCKET NUMBER
10/788,095	02/26/2004	Glenn W. Sheffler	K-2107P

CONFIRMATION NO.

7893

KENNAMETAL INC.
P.O. BOX 231
1600 TECHNOLOGY WAY
LATROBE PA 15650

Date Mailed: March 2, 2005

Decision Dismissing Petition under 37 CFR 1.138(c)

The declaration of express abandonment will not be recognized

This is in response to the petition under 37 CFR 1.138(c) filed on February 10, 2005, for express abandonment to avoid publication of the above-identified application.

The petition is dismissed.

The express abandonment will **not** be recognized for the reason(s) indicated below:

1. ☐ The petition under 37 CFR 1.138(c) was not filed in sufficient time to permit the appropriate officials to recognize the abandonment and remove the application from the publication process.

2. ☐ The petition was not signed by a party authorized by 37 CFR 1.33(b)(1), (3) or (4).

3. ■ The Application was published on November 4, 2004, in compliance with 35 U.S.C. 122(b), the publication number is US20040218987A1, and it is available on the USPTO web site at http://www.uspto.gov/patft/index.html.

The application **has/will be published** as scheduled.

Telephone inquiries should be directed Office of Patent Publication, Pre-Grant Publication Division, 703-605-4283.

Barbara J. Debnam
Office of Patent Publication,
Pre-Grant Publication Division

Rev. 10/01

UNITED STATES PATENT AND TRADEMARK OFFICE

Commissioner for Patents
United States Patent and Trademark Office
P.O. Box 1450
Alexandria, VA 22313-1450
www.uspto.gov

MYERS BIGEL SIBLEY & SAJOVEC
PO BOX 37428
RALEIGH NC 27627

COPY MAILED

NOV 0 2 2004

OFFICE OF PETITIONS

In re Application of :
Hyun-Ho Kim :
Application No. 10/788,105 : ON PETITION
Filed: February 26, 2004 :
Attorney Docket No. 5649-1285 :

This is a decision on the petition under 37 CFR 1.10 (c) filed October 1, 2004 to correct the filing date to February 26, 2004, rather than the presently accorded filing date of February 27, 2004.

Petitioner alleges that the application was deposited in Express Mail service on February 26, 2004. In support, on October 1, 2004, petitioner supplied a copy of Express Mail Label No. EV381446085US (the same Express Mail number found on the transmittal sheet accompanying the original application papers located in the official file). The "date-in" on the Express Mail Label is blank but the USPS post mark is February 26, 2004.

In view of the above, the petition is GRANTED and since no fee is due, none will be charged to petitioner's deposit account.

The application is being forwarded to the Office of Initial Patent Examination for correction of the **filing date to February 26, 2004** and for issuance of a corrected filing receipt.

Telephone inquiries related to this matter should be directed to the undersigned Petitions Attorney at (571) 272-3212.

Patricia Faison-Ball
Senior Petitions Attorney
Office of Petitions

UNITED STATES PATENT AND TRADEMARK OFFICE

UNITED STATES DEPARTMENT OF COMMERCE
United States Patent and Trademark Office
Address: COMMISSIONER FOR PATENTS
P.O. Box 1450
Alexandria, Virginia 22313-1450
www.uspto.gov

APPL NO.	FILING OR 371 (c) DATE	ART UNIT	FIL FEE REC'D	ATTY.DOCKET NO	DRAWINGS	TOT CLMS	IND CLMS
10/788,105	02/26/2004	2811	1320	5649-1285	28	41	5

CONFIRMATION NO. 7907

20792
MYERS BIGEL SIBLEY & SAJOVEC
PO BOX 37428
RALEIGH, NC 27627

CORRECTED FILING RECEIPT

OC000000014265228

Date Mailed: 11/02/2004

Receipt is acknowledged of this regular Patent Application. It will be considered in its order and you will be notified as to the results of the examination. Be sure to provide the U.S. APPLICATION NUMBER, FILING DATE, NAME OF APPLICANT, and TITLE OF INVENTION when inquiring about this application. Fees transmitted by check or draft are subject to collection. Please verify the accuracy of the data presented on this receipt. **If an error is noted on this Filing Receipt, please write to the Office of Initial Patent Examination's Filing Receipt Corrections, facsimile number 703-746-9195. Please provide a copy of this Filing Receipt with the changes noted thereon. If you received a "Notice to File Missing Parts" for this application, please submit any corrections to this Filing Receipt with your reply to the Notice. When the USPTO processes the reply to the Notice, the USPTO will generate another Filing Receipt incorporating the requested corrections (if appropriate).**

Applicant(s)

Hyun-ho Kim, Gyeonggi-do, KOREA, REPUBLIC OF;

Power of Attorney: The patent practitioners associated with Customer Number **20792**.

Domestic Priority data as claimed by applicant

Foreign Applications

REPUBLIC OF KOREA 10-2003-0013748 03/05/2003

If Required, Foreign Filing License Granted: 05/19/2004

The country code and number of your priority application, to be used for filing abroad under the Paris Convention, is US10/788,105

Projected Publication Date: Not Applicable

Non-Publication Request: No

Early Publication Request: No

Title

Ferroelectric memory devices and methods for fabricating the same

Preliminary Class

257

LICENSE FOR FOREIGN FILING UNDER
Title 35, United States Code, Section 184
Title 37, Code of Federal Regulations, 5.11 & 5.15

GRANTED

The applicant has been granted a license under 35 U.S.C. 184, if the phrase "IF REQUIRED, FOREIGN FILING LICENSE GRANTED" followed by a date appears on this form. Such licenses are issued in all applications where the conditions for issuance of a license have been met, regardless of whether or not a license may be required as set forth in 37 CFR 5.15. The scope and limitations of this license are set forth in 37 CFR 5.15(a) unless an earlier license has been issued under 37 CFR 5.15(b). The license is subject to revocation upon written notification. The date indicated is the effective date of the license, unless an earlier license of similar scope has been granted under 37 CFR 5.13 or 5.14.

This license is to be retained by the licensee and may be used at any time on or after the effective date thereof unless it is revoked. This license is automatically transferred to any related applications(s) filed under 37 CFR 1.53(d). This license is not retroactive.

The grant of a license does not in any way lessen the responsibility of a licensee for the security of the subject matter as imposed by any Government contract or the provisions of existing laws relating to espionage and the national security or the export of technical data. Licensees should apprise themselves of current regulations especially with respect to certain countries, of other agencies, particularly the Office of Defense Trade Controls, Department of State (with respect to Arms, Munitions and Implements of War (22 CFR 121-128)); the Office of Export Administration, Department of Commerce (15 CFR 370.10 (j)); the Office of Foreign Assets Control, Department of Treasury (31 CFR Parts 500+) and the Department of Energy.

NOT GRANTED

No license under 35 U.S.C. 184 has been granted at this time, if the phrase "IF REQUIRED, FOREIGN FILING LICENSE GRANTED" DOES NOT appear on this form. Applicant may still petition for a license under 37 CFR 5.12, if a license is desired before the expiration of 6 months from the filing date of the application. If 6 months has lapsed from the filing date of this application and the licensee has not received any indication of a secrecy order under 35 U.S.C. 181, the licensee may foreign file the application pursuant to 37 CFR 5.15(b).

UNITED STATES PATENT AND TRADEMARK OFFICE

Commissioner for Patents
United States Patent and Trademark Office
P.O. Box 1450
Alexandria, VA 22313-1450
www.uspto.gov

Dorsey & Whitney LLP
Intellectual Property Department
250 Park Avenue
New York, NY 10177

COPY MAILED
SEP 25 2006
OFFICE OF PETITIONS

In re Application of :
Wayne Cohen :
Application No. 10/788,113 : DECISION ON PETITION
Filed: February 26, 2004 : TO WITHDRAW
Attorney Docket No. AP35681-072708.0380 : FROM RECORD
:

This is a decision on the Request to Withdraw as attorney or agent of record under 37 C.F.R. § 1.36(b), filed July 5, 2006.

The request is **APPROVED**.

A grantable request to withdraw as attorney/agent of record must be signed by every attorney/agent seeking to withdraw or contain a clear indication that one attorney is signing on behalf of another/others. A request to withdraw will not be approved unless at least 30 (thirty) days would remain between the date of approval and the later of the expiration date of a time to file a response or the expiration date of the maximum time period which can be extended under 37 C.F.R. § 1.136(a).

The request was signed by Gary Abelev on behalf of all attorneys of record who are associated with the firm Dorsey & Whitney LLP.

All attorneys/agents have been withdrawn.

Applicant is reminded that there is no attorney of record at this time.

All future correspondence will be directed to the first named inventor Wayne Cohen at the address indicated below.

There is no outstanding Office action at this time.

Telephone inquiries concerning this decision should be directed to Terri Williams at 571-272-2991.

for David Bucci
Petitions Examiner
Office of Petitions

cc: **Mr. Wayne Cohen**
Managing Director
Bongo Logic Co., Ltd.
44 Convent Road
Silom Bangrak, Bangkok
Thailand 10500

UNITED STATES PATENT AND TRADEMARK OFFICE

Commissioner for Patents
United States Patent and Trademark Office
P.O. Box 1450
Alexandria, VA 22313-1450
www.uspto.gov

Walker Digital
Five High Ridge Park
Stamford, CT 06905

COPY MAILED

AUG 3 1 2004

OFFICE OF PETITIONS

In re Application of :
Walker et al. : DECISION ACCORDING STATUS
Application No. 10/788,124 : UNDER 37 CFR 1.47(a)
Filed: February 26, 2004 :
Attorney Docket No. 03-010 :

This is in response to the petition under 37 CFR 1.47(a), filed May 28, 2004.

The petition is granted.

Petitioner has shown that Victor M. Garcia, the non-signing inventor, has refused to join in the filing of the above-identified application after having been presented with the application papers. Specifically, the statement of facts of Michael D. Brinton establishes that the inventor was mailed the application papers, including the specification, claims and drawings, but failed to respond to the request that he sign the declaration.

The above-identified application and papers have been reviewed and found in compliance with 37 CFR 1.47(a). This application is hereby accorded Rule 1.47(a) status. As provided in Rule 1.47(c), this Office will forward notice of this application's filing to the non-signing inventor at the address given in the present petition. Notice of the filing of this application will also be published in the Official Gazette.

The application is being referred to Technology Center Art Unit 3714 for examination in due course.

Telephone inquiries regarding this decision should be directed to the undersigned at (703) 306-5589.

Christina Tartera Donnell

Christina Tartera Donnell
Senior Petitions Attorney
Office of Petitions

UNITED STATES PATENT AND TRADEMARK OFFICE

COMMISSIONER FOR PATENTS
UNITED STATES PATENT AND TRADEMARK OFFICE
P.O. BOX 1450
ALEXANDRIA, VA 22313-1450
www.uspto.gov

COPY MAILED

DEC 20 2006

OFFICE OF PETITIONS

DR. WALTER KATZ
8 UMBERLAND PLACE
MONROE TOWNSHIP, NJ 08831

In re Application of :
Shibnath Ghosal :
Application No. 10/788,130 : ON PETITION
Filed: February 26, 2004 :
Attorney Docket No. EWS-255/X/CONT :

This is a decision in response to the petition, filed May 30, 2006, to revive the above-identified application under the provisions of 37 CFR 1.137(b).

The petition is **GRANTED**.

The application became abandoned for a failure to reply in a timely manner to a non-final Office action mailed October 19, 2004. A Notice of Abandonment was mailed on May 13, 2005. In response, on May 30, 2006, the present petition was filed, along with an amendment and a Revocation and Power of Attorney.

The Revocation and Power of Attorney filed May 13, 2005, is not acceptable. The Revocation and Power of Attorney appears to be filed on behalf of the assignees and includes two Statements Under 37 CFR 3.73 indicating the respective percent of ownership. However, neither statement complies with 37 CFR 3.73(b) in that the reel and frame number where the recorded assignments appear in the assignment records of the USPTO are not provided. Nonethelessthe signature of Diane Dunn McKay appearing on the petition shall constitute a representation to the United States Patent and Trademark Office that she is authorized to represent the particular party on whose behalf she acts, in accordance with 37 CFR 1.34(a). A courtesy copy of this decision is being mailed to petitioner. However, if Ms. McKay desires to receive future correspondence regarding this application, the appropriate power of attorney or authorization of agent must be submitted. All future correspondence regarding this application file will be directed solely to the address of record.

The petition satisfies the requirements of 37 CFR 1.137(b) in that petitioner has supplied (1) the reply in the form of an amendment; (2) the petition fee of $750; and (3) the required statement of unintentional delay[1].

The application is being referred to Technology Center AU 1654 for consideration of the amendment filed May 30, 2006.

[1] 37 CFR 1.137(b)(3) requires a statement that the entire delay in filing the required reply from the due date for the reply until the filing of a grantable petition pursuant to 37 CFR 1.137(b) was unintentional. While the statement is not made by an attorney of record, such statement is being treated as having been made as the result of a reasonable inquiry into the facts and circumstances of such delay. See 37 CFR 10.18(b) and Changes to Patent Practice and Procedure; Final Rule Notice, 62 Fed. Reg. 53131, 53178 (October 10, 1997), 1203 Off. Gaz. Pat. Office 63, 103 (October 21, 1997). In the event that such an inquiry has not been made, petitioner must make such an inquiry. If such inquiry results in the discovery that it is not correct that the entire delay in filing the required reply from the due date for the reply until the filing of a grantable petition pursuant to 37 CFR 1.137(b) was unintentional, petitioner must notify the Office.

Telephone inquiries concerning this decision should be directed to the undersigned at (571) 272-3204. Inquiries relating to further prosecution should be directed to the Technology Center.

Sherry D. Brinkley
Petitions Examiner
Office of Petitions

cc: DIANE DUNN MCKAY, ESQ.
MATHEWS, SHEPHERD, MCKAY, & BRUNEAU, P.A.
100 THANET CIRCLE, SUITE 306
PRINCETON, NJ 08540

UNITED STATES PATENT AND TRADEMARK OFFICE

Commissioner for Patents
United States Patent and Trademark Office
P.O. Box 1450
Alexandria, VA 22313-1450
www.uspto.gov

MORGAN & FINNEGAN, L.L.P.
3 WORLD FINANCIAL CENTER
NEW YORK NY 10281-2101

COPY MAILED
DEC 13 2006
OFFICE OF PETITIONS

In re Application of :
Chikuma et al. :
Application No. 10/788,137 : DECISION ON PETITION
Filed: February 25, 2004 :
Attorney Docket No. 1232-5312 :

This is a decision on the petition filed July 18, 2006, which is being treated as a petition to withdraw the holding of abandonment for the above-identified application.

On February 7, 2006, the Office mailed a Notice of Allowance and Fee(s) Due and a Notice of Allowability, which set a three-month statutory period for reply. In the absence of a timely filed response, the application was held abandoned on May 8, 2006. A Notice of Abandonment was mailed on June 23, 2006.

In the present petition, the practitioner requested that the Office withdraw the holding of abandonment due to non-receipt of the Notice of Allowance and the Notice of Allowability.

PETITION TO WITHDRAW THE HOLDING OF ABANDONMENT

A review of the record indicates no irregularity in the mailing of the Notice of Allowance and the Notice of Allowability, and in the absence of any irregularity in the mailing, there is a strong presumption that the Notices were properly mailed to the address of record. This presumption may be overcome by a showing that the Notices were not in fact received. The showing required to establish non-receipt of an Office communication must include a statement from the practitioner, stating that the practitioner did not receive the Office communication and attesting to the fact that a search of the file jacket and docket records indicates that the Office communication was not received. A copy of the docket record where the non-received Office communication would have been entered had it been received and docketed must be attached to and referenced in practitioner's statement. See MPEP 711.03(c)(I)(A). For example, if a three-month period for reply was set in the non-received Office communication, a copy of the docket report showing all replies docketed for a date three months from the mail date of the non-received Office communication must be submitted as documentary proof of

non-receipt of the Office communication. The showing outlined above may not be sufficient if there are circumstances that point to a conclusion that the Office communication may have been lost after receipt rather than a conclusion that the Office communication was lost in the mail (*e.g.* if the practitioner has a history of not receiving Office communications).

After reviewing the documents submitted on petition, the Office concludes that the showing of record is sufficient to warrant withdrawal of the holding of abandonment. The practitioner for applicants submitted copies of docket records where the Notices would have been entered had they been received and docketed. The practitioner attested to the fact that a search of the file jacket and docket records indicated that the Notice of Allowance and the Notice of Allowability were not received. Accordingly, applicants presented the required showing under 37 CFR 1.181.

The petition under 37 CFR 1.181 is **GRANTED**. The $1,500.00 petition fee is unnecessary and will be refunded to the Deposit Account.

This matter is being forwarded to the Office of Patent Publication for processing into a patent.

Telephone inquiries concerning the issuance of the application into a patent should be directed to the Office of Patent Publication, Customer Service at (571) 272-4200. Telephone inquiries related to this decision may be directed to the undersigned at (571) 272-3211.

Christina Tartera Donnell

Christina Tartera Donnell
Senior Petitions Attorney
Office of Petitions

UNITED STATES PATENT AND TRADEMARK OFFICE

Commissioner for Patents
United States Patent and Trademark Office
P.O. Box 1450
Alexandria, VA 22313-1450
www.uspto.gov

JJGJr : 11-07

COPY MAILED

NOV 26 2007

OFFICE OF PETITIONS

BRACEWELL & PATTERSON, L.L.P.
P. O. BOX 61389
HOUSTON TX 77208-1389

In re Application of :
Bietsch, et al. :
Application No. 10/788,145 : DECISION
Filed: 26 February, 2004 :
Attorney Docket No. HSJ920030186US1 :

This is a decision on the petition filed on 8 June, 2007, under 37 C.F.R. §1.47(a).

The Office regrets the delay in addressing this matter, however, the instant petition was presented to the attorneys in the Office of Petitions only at this writing.[1]

For the reasons set forth below, the petition under 37 C.F.R. §1.47(a) is **DISMISSED**.

NOTES:

Any reply must include a renewed petition (and fee) must include a petition under 37 C.F.R. §1.47 and must be submitted within two (2) months from the mail date of this decision. Extensions of time under 37 C.F.R. §1.136(a) are permitted. The reconsideration request should include a cover letter entitled "Petition under 37 C.F.R. §1.47";

Thereafter, there will be no further reconsideration of this matter.

[1] NOTE: **Monitoring of the status of applications on PAIR can inform one's management of application responses and provide an indication when mailings of Office actions should be expected. Status Inquiries filed at three (3) or four (4) month intervals provide a demonstration of diligence and attention in supporting a petition seeking relief under 37 C.F.R. §1.181.**

BACKGROUND

The record indicates:

- the instant application was filed on 26 February, 2004, without, *inter alia*, a fully executed oath/declaration;

- on 24 May, 2004, the Office mailed a Notice of Missing Parts indicating, *inter alia*, that a fully executed oath/declaration (signed and dated) was required;

- on 20 August, 2004, Petitioner filed, *inter alia*, a partially executed oath/declaration but no petition and supporting documents to complete the reply, however, it does not appear that the Office mailed a Notice of Incomplete Reply;

- on 8 March, 2007, the Examiner mailed a final Office action, requiring, *inter alia*, a fully executed oath/declaration;

- on 22 May, 2007, Petitioner Michael E. Noe, Jr. (Reg. No. 44,975) filed, *inter alia*, the instant petition, an oath/declaration signed by Messrs. Chaw, Lihiri and Thurber (for themselves and on behalf of) but not the non-signing co-inventors Alexander Bietsch (Mr. Bietsch) and Bruno Michel (Mr. Michel), and statement by Petitioner that materials were transmitted by Email, and that Messrs. Bietsch and Michel have not replied, however, it is clear from Petitioner's submissions that there is no evidence of transmission of the entire application (description, claims, abstract and drawings) to and receipt by the non-signing inventors or of the accuracy of the addresses used therefore (receipt is confirmed by a written response from the non-signing inventor—not by silence)—and in light of that failure there also is no evidence of a diligent effort to ascertain a current and/or reasonably believed to be valid last known residential mail address for the non-signing inventors—Petitioner is directed to the discussion below from the Manual of Patent Examining Procedure for a discussion of the requirements to transmit to the non-signing inventor(s) copies of the entire application (description, claims, abstract and drawings), and the other requirements under the law, as discussed below.

The above-described procedure (and as set forth in detail below) is a matter of due process owed to the averred non-signing inventor.

Out of an abundance of caution, Petitioners always are reminded that those registered to practice *and* all others who make representations before the Office are to inquire into the underlying facts of representations made to the Office and support averments with the appropriate documentation–since all owe to the Office the continuing duty to disclose.[2]

---

[2] See supplement of 17 June, 1999. The Patent and Trademark Office is relying on petitioner's duty of candor and good faith and accepting a statement made by Petitioner. See Changes to Patent Practice and Procedure, 62 Fed. Reg. at 53160 and 53178, 1203 Off. Gaz. Pat. Office at 88 and 103 (responses to comments 64 and 109)(applicant obligated under 37 C.F.R. §10.18 to inquire into the underlying facts and circumstances when providing statements to the Patent and Trademark Office).

ANALYSIS

The regulations at 37 C.F.R. §1.47 provide in pertinent part:

> **§ 1.47 Filing when an inventor refuses to sign or cannot be reached.**
> (a) If a joint inventor refuses to join in an application for patent or cannot be found or reached after diligent effort, the application may be made by the other inventor on behalf of himself or herself and the nonsigning inventor. The oath or declaration in such an application must be accompanied by a petition including proof of the pertinent facts, the fee set forth in § 1.17(h), and the last known address of the nonsigning inventor. The nonsigning inventor may subsequently join in the application by filing an oath or declaration complying with §1.63.
> * * *

The regulations at 37 C.F.R. §1.63 provide in pertinent part:

> **§1.63 Oath or declaration.**
> (b) In addition to meeting the requirements of paragraph (a)of this section, the oath or declaration must also:

Specifically, the regulations at 37 C.F.R. §10.18 provide:

§ 10.18 Signature and certificate for correspondence filed in the Patent and Trademark Office.
(a) For all documents filed in the Office in patent, trademark, and other non-patent matters, except for correspondence that is required to be signed by the applicant or party, each piece of correspondence filed by a practitioner in the Patent and Trademark Office must bear a signature by such practitioner complying with the provisions of §1.4(d), §1.4(e), or § 2.193(c)(1) of this chapter.
(b) By presenting to the Office (whether by signing, filing, submitting, or later advocating) any paper, the party presenting such paper, whether a practitioner or non-practitioner, is certifying that—
(1) All statements made therein of the party's own knowledge are true, all statements made therein on information and belief are believed to be true, and all statements made therein are made with the knowledge that whoever, in any matter within the jurisdiction of the Patent and Trademark Office, knowingly and willfully falsifies, conceals, or covers up by any trick, scheme, or device a material fact, or makes any false, fictitious or fraudulent statements or representations, or makes or uses any false writing or document knowing the same to contain any false, fictitious or fraudulent statement or entry, shall be subject to the penalties set forth under 18 U.S.C. 1001, and that violations of this paragraph may jeopardize the validity of the application or document, or the validity or enforceability of any patent, trademark registration, or certificate resulting therefrom; and
(2) To the best of the party's knowledge, information and belief, formed after an inquiry reasonable under the circumstances, that —
(i) The paper is not being presented for any improper purpose, such as to harass someone or to cause unnecessary delay or needless increase in the cost of prosecution before the Office;
(ii) The claims and other legal contentions therein are warranted by existing law or by a nonfrivolous argument for the extension, modification, or reversal of existing law or the establishment of new law;
(iii) The allegations and other factual contentions have evidentiary support or, if specifically so identified, are likely to have evidentiary support after a reasonable opportunity for further investigation or discovery; and
(iv) The denials of factual contentions are warranted on the evidence, or if specifically so identified, are reasonably based on a lack of information or belief.
(c) Violations of paragraph (b)(1) of this section by a practitioner or non-practitioner may jeopardize the validity of the application or document, or the validity or enforceability of any patent, trademark registration, or certificate resulting therefrom. Violations of any of paragraphs (b)(2)(i) through (iv) of this section are, after notice and reasonable opportunity to respond, subject to such sanctions as deemed appropriate by the Commissioner, or the Commissioner's designee, which may include, but are not limited to, any combination of —
(1) Holding certain facts to have been established;
(2) Returning papers;
(3) Precluding a party from filing a paper, or presenting or contesting an issue;
(4) Imposing a monetary sanction;
(5) Requiring a terminal disclaimer for the period of the delay; or
(6) Terminating the proceedings in the Patent and Trademark Office.
(d) Any practitioner violating the provisions of this section may also be subject to disciplinary action. See § 10.23(c)(15).
[Added 50 FR 5175, Feb. 6, 1985, effective Mar. 8, 1985; para. (a) revised, 58 FR 54494, Oct. 22, 1993, effective Nov. 22, 1993; paras. (a) & (b) revised, paras. (c) & (d) added, 62 FR 53131, Oct. 10, 1997, effective Dec. 1, 1997; para. (a) revised, 69 FR 56481, Sept. 21, 2004, effective Oct. 21, 2004]

> (1)Identify the application to which it is directed;
>
> (2) State that the person making the oath or declaration has reviewed and understands the contents of the application, Including the claims, as amended by any amendment specifically referred to in the oath or declaration; and
>
> (3) State that the person making the oath or declaration acknowledges the duty to disclose to the Office all information known to the person to be material to patentability as defined in § 1.56.

When one alleges a refusal of the inventor to sign the application papers, the circumstances of the presentation of the application papers and of the refusal must be specified in a statement of facts by the person who, *inter alia*, presented the inventor with the application papers and/or to whom the refusal was made.

The commentary at MPEP §409.03(d) provides:

> **409.03(d) Proof of Unavailability or Refusal**
>
> INVENTOR CANNOT BE REACHED
>
> Where inability to find or reach a nonsigning inventor "after diligent effort" is the reason for filing under 37 C.F.R. §1.47, a statement of facts should be submitted that fully describes the exact facts which are relied on to establish that a diligent effort was made.
>
> The fact that a nonsigning inventor is on vacation or out of town and is therefore temporarily unavailable to sign the declaration is not an acceptable reason for filing under 37 C.F.R. §1.47.
>
> Furthermore, the fact that an inventor is hospitalized and/or is not conscious is not an acceptable reason for filing under 37 C.F.R. §1.47. 37 C.F.R. §1.43 may be available under these circumstances. See MPEP §409.02. Such a petition under 37 C.F.R. §1.47 will be dismissed as inappropriate.
>
> The statement of facts must be signed, where at all possible, by a person having firsthand knowledge of the facts recited therein. Statements based on hearsay will not normally be accepted. Copies of documentary evidence such as internet searches, certified mail return receipts, cover letters of instructions, telegrams, that support a finding that the nonsigning inventor could not be found or reached should be made part of the statement. The steps taken to locate the whereabouts of the nonsigning inventor should be included statement of facts. It is important that the statement contain facts as opposed to conclusions.

REFUSAL TO JOIN

A refusal by an inventor to sign an oath or declaration when the inventor has not been presented with the application papers does not itself suggest that the inventor is refusing to join the application unless it is clear that the inventor understands exactly what he or she is being asked to sign and refuses to accept the application papers. A copy of the application papers should be sent to the last known address of the nonsigning inventor, or, if the nonsigning inventor is represented by counsel, to the address of the nonsigning inventor's attorney. The fact that an application may contain proprietary information does not relieve the 37 C.F.R. §1.47 applicant of the responsibility to present the application papers to the inventor if the inventor is willing to receive the papers in order to sign the oath or declaration. It is noted that the inventor may obtain a complete copy of the application, unless the inventor has assigned his or her interest in the application, and the assignee has requested that the inventor not be permitted access. See MPEP §106. It is reasonable to require that the inventor be presented with the application papers before a petition under 37 C.F.R. §1.47 is granted since such a procedure ensures that the inventor is apprised of the application to which the oath or declaration is directed. In re Gray, 115 USPQ 80 (Comm'r Pat. 1956).

Where a refusal of the inventor to sign the application papers is alleged, the circumstances of the presentation of the application papers and of the refusal must be specified in a statement of facts by the person who presented the inventor with the application papers and/or to whom the refusal was made. Statements by a party not present when an oral refusal is made will not be accepted.

Proof that a bona fide attempt was made to present a copy of the application papers (specification, including claims, drawings, and oath or declaration) to the nonsigning inventor for signature, but the inventor refused to accept delivery of the papers or expressly stated that the application papers should not be sent, may be sufficient.

When there is an express oral refusal, that fact along with the time and place of the refusal must be stated in the statement of facts. When there is an express written refusal, a copy of the document evidencing that refusal must be made part of the statement of facts. The document may be redacted to remove material not related to the inventor's reasons for refusal.

When it is concluded by the 37 C.F.R. §1.47 applicant that a nonsigning inventor's conduct constitutes a refusal, all facts upon which that conclusion is based should be stated in the statement of facts in support of the petition or directly in the petition. If there is documentary evidence to support facts alleged in the petition or in any statement of facts, such evidence should be submitted. Whenever a nonsigning inventor gives a reason for refusing to sign the application oath or declaration, that reason should be stated in the petition.

Thus, not only must a copy of the entire application must be sent to the last known address of the non-signing inventor with a request that he/she sign the declaration for the patent application–and evidence of that transmittal submitted–but also a reasonable effort must be made to ascertain a current or last known address, and the petition must state over the signature and registration number of the Petitioner the last known address and, if appropriate, evidence of the due diligence effort ascertaining same.

Alternatively, an oath or declaration for the patent application in compliance with 37 C.F.R. §§1.63 and 1.64 must be presented.

(The declaration must set forth the inventor's residence, citizenship and post office address. An oath or declaration in compliance with 37 C.F.R. §§1.63 and 1.64 signed by the Rule 1.47 applicant is required.[3])

Petitioner's attention is directed to the discussion in the BACKGROUND and ANALYSIS, above, and should ensure that the deficiencies addressed there are corrected with any future petition herein, to include (but not necessarily be limited to) the requirements that a copy of the transmittal letter forwarding the entire application (description, claims, abstract and drawings) to, and evidencing reasonable diligence in ascertaining a reasonably believed last known/current address for the non-signing inventor, all as required by law.

CONCLUSION

Therefore, the instant petition hereby is **dismissed**.

Further correspondence with respect to this matter should be addressed as follows:[4]

By mail: Commissioner for Patents[5]
P.O. Box 1450
Alexandria, VA 22313-1450

By FAX: IFW Formal Filings
(571) 273-8300
ATTN.: Office of Petitions

---

[3] See: MPEP 409.03(b).

[4] On July 15, 2005, the Central Facsimile (FAX) Number changed from (703) 872-9306 to (571) 273-8300. Old number(s) no longer are in service and (571) 273-8300 is the only facsimile number recognized for centralized delivery. (For further information. see: http://www.uspto.gov/web/offices/pac/dapp/opla/preognotice/cfax062005.pdf .)

[5] To determine the appropriate addresses for other subject-specific correspondence, refer to the USPTO Web site at www.uspto.gov.

By hand: Mail Stop: Petition
Customer Service Window
Randolph Building
401 Dulany Street
Alexandria, VA 22314

While telephone inquiries regarding this decision may be directed to the undersigned at (571) 272-3214, it is noted that all practice before the Office is in writing (see: 37 C.F.R. §1.2[3]) and the proper authority for action on any matter in this regard are the statutes (35 U.S.C.), regulations (37 C.F.R.) and the commentary on policy (MPEP). Therefore, no telephone discussion may be controlling or considered authority for Petitioner's action(s).

John J. Gillon, Jr.
Senior Attorney
Office of Petitions

[3] The regulations at 37 C.F.R. §1.2 provide:
§1.2 Business to be transacted in writing.
All business with the Patent and Trademark Office should be transacted in writing.The personal attendance of applicants or their attorneys or agents at the Patent and Trademark Office is unnecessary. The action of the Patent and Trademark Office will be based exclusively on the written record in the Office. No attention will be paid to any alleged oral promise, stipulation,or understanding in relation to which there is disagreement or doubt.

UNITED STATES PATENT AND TRADEMARK OFFICE

UNITED STATES DEPARTMENT OF COMMERCE
United States Patent and Trademark Office
Address: COMMISSIONER FOR PATENTS
P.O. Box 1450
Alexandria, Virginia 22313-1450
www.uspto.gov

INTELLECTUAL PROPERTY MANAGEMENT
BOEING MANAGEMENT COMPANY
P.O. BOX 2515
MAIL CODE 110-SD54
SEAL BEACH, CA 90740-1515

Mail Date: 04/20/2010

Applicant	: Ming-Yuh Huang	: DECISION ON REQUEST FOR
Patent Number	: 7640429	: RECALCULATION of PATENT
Issue Date	: 12/29/2009	: TERM ADJUSTMENT IN VIEW
Appliction No	: 10/788,151	: OF WYETH AND NOTICE OF INTENT TO
Filed	: 02/26/2004	: ISSUE CERTIFICATE OF CORRECTION
		:

The Request for Recalculation is **GRANTED** to the extent indicated.

The patent term adjustment has been determined to be **1289** days. The USPTO will *sua sponte* issue a certificate of correction reflecting the amount of PTA days determined by the recalculation.

Prior to the issuance of the certificate of correction, the USPTO will afford patentee an opportunity to be heard and request reconsideration. Accordingly, patentee has **one month or thirty (30) days**, whichever is longer, to file a request for reconsideration of this patent term adjustment calculation. See 35 U.S.C. 154(b)(3)(B)(ii) and 37 CFR 1.322(a)(4). No extensions of time will be granted under 37 CFR 1.136.

Patentee should use document code PET.OP if electronically filing a request for reconsideration of this patent term adjustment calculation. The patentee must also include the information required by 37 CFR 1.705(b)(2) and the fee required by 37 CFR 1.18(e). If patentee does not file a timely request for reconsideration of this patent term adjustment calculation including the information required by 37 CFR 1.705(b)(2) and the fee required by 37 CFR 1.18(e), the USPTO will issue a certificate of correction reflecting the PTA determination noted above.

Patentee should be aware that in order to preserve the right to review in the United States District Court for the District of Columbia of the USPTO patent term adjustment determination, patentee must ensure that he or she also take the steps required under 35 U.S.C. 154(b)(4)(A) in a timely manner. Nothing in the request for recalculation should be construed as providing an alternative time frame for commencing a civil action under 35 U.S.C. 154(b)(4)(A).

Any questions concerning this decision should be directed to the Office of Patent Legal Administration at 571-272-7702.

UNITED STATES PATENT AND TRADEMARK OFFICE

COMMISSIONER FOR PATENTS
UNITED STATES PATENT AND TRADEMARK OFFICE
P.O. BOX 1450
ALEXANDRIA, VA 22313-1450
www.uspto.gov

GARDERE WYNNE SEWELL LLP
INTELLECTUAL PROPERTY SECTION
3000 THANKSGIVING TOWER
1601 ELM ST
DALLAS, TX 75201-4761

COPY MAILED

APR 30 2008

OFFICE OF PETITIONS

In re Application of :
Merlin B. Halverson, et al. :
Application No. 10/788,177 : ON PETITION
Filed: February 26, 2004 :
Attorney Docket No.: 115032-1003 :

This is a decision on the petition, filed April 29, 2008, under 37 CFR 1.313(c)(2) to withdraw the above-identified application from issue after payment of the issue fee.

It does not appear that the petition is signed by an attorney of record. However, in accordance with 37 CFR 1.34(a), the signature of Scott C. Sample appearing on the correspondence shall constitute a representation to the United States Patent and Trademark Office that he is authorized to represent the particular party on whose behalf he acts.

The petition is **GRANTED**.

The above-identified application is withdrawn from issue for consideration of a submission under 37 CFR 1.114 (request for continued examination). See 37 CFR 1.313(c)(2).

Petitioner is advised that the issue fee paid on April 7, 2008 in the above-identified application cannot be refunded. If, however, the above-identified application is again allowed, petitioner may request that it be applied towards the issue fee required by the new Notice of Allowance.[1]

Telephone inquiries relating to this decision should be directed to the undersigned at (571) 272-3204.

[1] *The request to apply the issue fee to the new Notice may be satisfied by completing and returning the new Part B – Fee(s) Transmittal Form (along with any balance due at the time of submission). Petitioner is advised that the Issue Fee Transmittal Form must be completed and timely submitted to avoid abandonment of the application.*

The application is being referred to Technology Center AU 3679 for processing of the request for continued examination under 37 CFR 1.114.

Sherry D. Brinkley
Petitions Examiner
Office of Petitions

UNITED STATES PATENT AND TRADEMARK OFFICE

Commissioner for Patents
United States Patent and Trademark Office
P.O. Box 1450
Alexandria, VA 22313-1450
www.uspto.gov

BURNS DOANE SWECKER & MATHIS L L P
POST OFFICE BOX 1404
ALEXANDRIA VA 22313-1404

COPY MAILED

NOV 1 9 2004

OFFICE OF PETITIONS

In re Application of :
Mats Birring et al. :
Application No. 10/788,202 : DECISION GRANTING PETITION
Filed: February 27, 2004 :
Att'y Docket No. 018798-207 :

This is a decision on the petition filed October 29, 2004, under 37 CFR 1.53, in response to the Notice of Incomplete Nonprovisional Application mailed August 31, 2004, requesting that the above identified application be accorded a filing date of February 27, 2004.

On February 27, 2004, the application was filed.

On August 31, 2004, the Office of Initial Patent Examination mailed a "Notice of Incomplete Nonprovisional Application" stating that the application had not been accorded a filing date because the application, *inter alia*, was deposited without drawings and that the filing date of the application would be the date of receipt of the drawings.

In response, on October 29, 2004 the present petition, and 6 sheets of drawings were filed. Petitioners argue that 6 sheets of drawings were filed with the other application papers on August 31, 2004. In support of the petition, a copy of petitioner's postcard receipt which shows an official USPTO date-stamp of February 27, 2004, and the above-identified application number, and acknowledges receipt of 6 sheets of drawings, was supplied with the present petition. Petitioner requests that the application, including 6 sheets of drawings, be accorded a filing date of February 27, 2004.

Upon review of the record, no sheets of drawings deposited on February 27, 2004, have been located among the application papers. However, the evidence is convincing that the application papers deposited on February 27, 2004, included 6 sheets of drawings, which were subsequently misplaced in the USPTO. Therefore, the application, including the 6 sheets of drawings, was complete on filing and entitled to a filing date of February 27, 2004.

In view of the above, the petition is **GRANTED**.

The Notice of Incomplete Nonprovisional Application mailed August 31, 2004, is withdrawn. Therefore, the petition fee in the amount of $130.00 will be refunded to deposit account no. 02-4800.

The application is being returned to the Office of Initial Patent Examination for reprocessing with a filing date of February 27, 2004, using the application papers filed on February 27, 2004 and the 6 sheets of drawings supplied on October 29, 2004.

Telephone inquiries related to this decision should be directed to the undersigned Petitions Attorney at (571) 272-3212.

Patricia Faison-Ball
Senior Petitions Attorney
Office of Petitions

UNITED STATES PATENT AND TRADEMARK OFFICE

UNITED STATES DEPARTMENT OF COMMERCE
United States Patent and Trademark Office
Address: COMMISSIONER FOR PATENTS
P.O. Box 1450
Alexandria, Virginia 22313-1450
www.uspto.gov

VOLPE AND KOENIG, P.C.
DEPT. ICC
UNITED PLAZA, SUITE 1600
30 SOUTH 17TH STREET
PHILADELPHIA, PA 19103

Mail Date: 04/26/2010

Applicant	: Gary Lomp	: DECISION ON REQUEST FOR
Patent Number	: 7593453	: RECALCULATION of PATENT
Issue Date	: 09/22/2009	: TERM ADJUSTMENT IN VIEW
Application No	: 10/788,209	: OF WYETH AND NOTICE OF INTENT TO
Filed	: 02/26/2004	: ISSUE CERTIFICATE OF CORRECTION
		:

The Request for Recalculation is **GRANTED** to the extent indicated.

The patent term adjustment has been determined to be **1153** days. The USPTO will *sua sponte* issue a certificate of correction reflecting the amount of PTA days determined by the recalculation.

Prior to the issuance of the certificate of correction, the USPTO will afford patentee an opportunity to be heard and request reconsideration. Accordingly, patentee has **one month or thirty (30) days**, whichever is longer, to file a request for reconsideration of this patent term adjustment calculation. See 35 U.S.C. 154(b)(3)(B)(ii) and 37 CFR 1.322(a)(4). No extensions of time will be granted under 37 CFR 1.136.

Patentee should use document code PET.OP if electronically filing a request for reconsideration of this patent term adjustment calculation. The patentee must also include the information required by 37 CFR 1.705(b)(2) and the fee required by 37 CFR 1.18(e). If patentee does not file a timely request for reconsideration of this patent term adjustment calculation including the information required by 37 CFR 1.705(b)(2) and the fee required by 37 CFR 1.18(e), the USPTO will issue a certificate of correction reflecting the PTA determination noted above.

Patentee should be aware that in order to preserve the right to review in the United States District Court for the District of Columbia of the USPTO patent term adjustment determination, patentee must ensure that he or she also take the steps required under 35 U.S.C. 154(b)(4)(A) in a timely manner. Nothing in the request for recalculation should be construed as providing an alternative time frame for commencing a civil action under 35 U.S.C. 154(b)(4)(A).

Any questions concerning this decision should be directed to the Office of Patent Legal Administration at 571-272-7702.

UNITED STATES PATENT AND TRADEMARK OFFICE

Commissioner for Patents
United States Patent and Trademark Office
P.O. Box 1450
Alexandria, VA 22313-1450
www.uspto.gov

Duane Arthur Coon
11051 W. 1st St.
Star, ID 83669

COPY MAILED

SEP 19 2007

OFFICE OF PETITIONS

In re Application of Coon :
Application No. 10/788,213 : Decision on Petition
Filing Date: February 27, 2004 :
For: Trowel :

This is a decision on the petition filed May 21, 2007, under 37 CFR 1.181 to withdraw the holding of abandonment of the above-identified application.

The petition is **dismissed.**

Facts:

A Notice of Allowability was mailed September 22, 2005. The Notice set a period for reply of three (3) months.

The Notice of Allowability stated,

> Applicant has THREE MONTHS ... to file a reply complying with the requirements noted below. Failure to timely comply will result in ABANDONMENT of this application....
>
> CORRECTED DRAWINGS ... must be submitted. [The drawings should include] changes required by the attached Examiner's Amendment.

The Examiner's Amendment mailed with the Notice of Allowability stated,

> The following changes to the drawings have been approved by the examiner and agreed upon by applicant....
>
> In order to avoid abandonment of the application, applicant must make these above agreed upon drawing changes. See the attached marked up copy of drawings.

Petitioner did not believe new drawings were required and did not submit new drawings. As a result, the application became abandoned on December 23, 2005.

A Notice of Abandonment was mailed July 26, 2006.

Discussion:

Prior to an application issuing as a patent, the drawings must meet both requirements pertaining to substance and format. The marked up copy of the drawings included changes to the substance of the drawings. However, the examiner did not take steps to ensure all formal requirements, such as margins, were met. Instead, the examiner placed the obligation on petitioner to file corrected drawings complying with all formal requirements.

For the reasons above, the requirement for corrected drawings was proper.

However, even if the requirement for corrected drawings was erroneous, the application would still be abandoned. Abandonment is not based on the correctness, in whole or in part, of an Office action. 35 U.S.C. 133 requires that if an action is mailed, and if an applicant fails to timely respond to such action, the application goes abandoned as a matter of law. The statute does not distinguish "correct" Office actions from "incorrect" Office actions. An Office action in the form of a Notice of Allowability was mailed September 22, 2005. The Notice provided applicants with three months to file a response. Applicant did not file a response to the Notice of Allowability within 3 months. Therefore, as a matter of law, the application is abandoned.

Petitioner failed to respond to the Notice of Allowability. Petitioner did not file a reply stating the requirement for corrected drawings was incorrect. Petitioner did not contact the examiner and have the examiner withdraw the requirement in writing prior to the expiration of the time period for response. Petitioner did not draft new drawings and ensure the new drawings complied with all formal requirements. Petitioner did not resubmit the marked up copies as the corrected drawings he wished to be entered or file a written request for the marked up drawings mailed with the Notice of Allowability to be entered as part of the official application.

Petitioner may wish to consider filing a petition to revive based on unintentional abandonment under 37 CFR 1.137(b). A grantable petition pursuant to 37 CFR 1.137(b) must be accompanied by the required reply (petitioner may submit new drawings or request the Office use the September 22, 2005 marked-up drawings), the required petition fee ($750 for a small entity), and a statement that the **entire** delay in filing the required reply from the due date for the reply until the filing of a grantable petition pursuant to 37 CFR 1.137(b) was unintentional. A copy of a blank petition form is enclosed for petitioner's convenience.

Any request for reconsideration must be submitted within TWO (2) MONTHS from the mail date of this decision. Extensions of time under 37 CFR 1.136(a) are NOT permitted. The reconsideration request should include a cover letter entitled "Renewed Petition under 37 CFR 1.181."

Further correspondence with respect to this matter should be addressed as follows:

By mail: Mail Stop Petition
Commissioner for Patents
P.O. Box 1450
Alexandria, VA 22313-1450

By facsimile: (571) 273-8300
Attn: Office of Petitions

By hand: U.S. Patent and Trademark Office
Customer Service Window
Randolph Building
401 Dulany Street
Alexandria, VA 22314

Telephone inquiries regarding this communication should be directed to Petitions Attorney Steven Brantley at (571) 272-3203.

Charles Steven Brantley
Senior Petitions Attorney
Office of Petitions

Attached: Form PTO/SB/64
Privacy Act Notice

PTO/SB/64 (04-07)
Approved for use through 09/30/2007. OMB 0651-0031
U.S. Patent and Trademark Office; U.S. DEPARTMENT OF COMMERCE
Under the Paperwork Reduction Act of 1995, no persons are required to respond to a collection of information unless it displays a valid OMB control number.

PETITION FOR REVIVAL OF AN APPLICATION FOR PATENT ABANDONED UNINTENTIONALLY UNDER 37 CFR 1.137(b)

Docket Number (Optional)

First named inventor:

Application No.: Art Unit:

Filed: Examiner:

Title:

Attention: Office of Petitions
Mail Stop Petition
Commissioner for Patents
P.O. Box 1450
Alexandria, VA 22313-1450
FAX (571) 273-8300

NOTE: If information or assistance is needed in completing this form, please contact Petitions Information at (571) 272-3282.

The above-identified application became abandoned for failure to file a timely and proper reply to a notice or action by the United States Patent and Trademark Office. The date of abandonment is the day after the expiration date of the period set for reply in the office notice or action plus an extensions of time actually obtained.

APPLICANT HEREBY PETITIONS FOR REVIVAL OF THIS APPLICATION

NOTE: A grantable petition requires the following items:
(1) Petition fee;
(2) Reply and/or issue fee;
(3) Terminal disclaimer with disclaimer fee - required for all utility and plant applications filed before June 8, 1995; and for all design applications; and
(4) Statement that the entire delay was unintentional.

1.Petition fee

☐ Small entity-fee $ _____ (37 CFR 1.17(m)). Applicant claims small entity status. See 37 CFR 1.27.

☐ Other than small entity – fee $ _____ (37 CFR 1.17(m))

2. Reply and/or fee

A. The reply and/or fee to the above-noted Office action in the form of _____(identify type of reply):

☐ has been filed previously on _____.
☐ is enclosed herewith.

B. The issue fee and publication fee (if applicable) of $ _____.

☐ has been paid previously on _____.
☐ is enclosed herewith.

This collection of information is required by 37 CFR 1.137(b). The information is required to obtain or retain a benefit by the public which is to file (and by the USPTO to process) an application. Confidentiality is governed by 35 U.S.C. 122 and 37 CFR 1.11 and 1.14. This collection is estimated to take 1.0 hour to complete, including gathering, preparing, and submitting the completed application form to the USPTO. Time will vary depending upon the individual case. Any comments on the amount of time you require to complete this form and/or suggestions for reducing this burden, should be sent to the Chief Information Officer, U.S. Patent and Trademark Office, U.S. Department of Commerce, P.O. Box 1450, Alexandria, VA 22313-1450. DO NOT SEND FEES OR COMPLETED FORMS TO THIS ADDRESS. **SEND TO: Mail Stop Petition, Commissioner for Patents, P.O. Box 1450, Alexandria, VA 22313-1450.**

If you need assistance in completing the form, call 1-800-PTO-9199 and select option 2.

3. Terminal disclaimer with disclaimer fee

☐ Since this utility/plant application was filed on or after June 8, 1995, no terminal disclaimer is required.

☐ A terminal disclaimer (and disclaimer fee (37 CFR 1.20(d)) of $ _____ for a small entity or $ _____ for other than a small entity) disclaiming the required period of time is enclosed herewith (see PTO/SB/63).

4. STATEMENT: The entire delay in filing the required reply from the due date for the required reply until the filing of a grantable petition under 37 CFR 1.137(b) was unintentional. [NOTE: The United States Patent and Trademark Office may require additional information if there is a question as to whether either the abandonment or the delay in filing a petition under 37 CFR 1.137(b) was unintentional (MPEP 711.03(c), subsections (III)(C) and (D)).]

WARNING:

Petitioner/applicant is cautioned to avoid submitting personal information in documents filed in a patent application that may contribute to identity theft. Personal information such as social security numbers, bank account numbers, or credit card numbers (other than a check or credit card authorization form PTO-2038 submitted for payment purposes) is never required by the USPTO to support a petition or an application. If this type of personal information is included in documents submitted to the USPTO, petitioners/applicants should consider redacting such personal information from the documents before submitting them to the USPTO. Petitioner/applicant is advised that the record of a patent application is available to the public after publication of the application (unless a non-publication request in compliance with 37 CFR 1.213(a) is made in the application) or issuance of a patent. Furthermore, the record from an abandoned application may also be available to the public if the application is referenced in a published application or an issued patent (see 37 CFR 1.14). Checks and credit card authorization forms PTO-2038 submitted for payment purposes are not retained in the application file and therefore are not publicly available.

_____ _____
Signature Date

_____ _____
Typed or printed name Registration Number, if applicable

_____ _____
Address Telephone Number

_____
Address

Enclosures: ☐ Fee Payment
☐ Reply
☐ Terminal Disclaimer Form
☐ Additional sheets containing statements establishing unintentional delay
☐ Other: _____

CERTIFICATE OF MAILING OR TRANSMISSION [37 CFR 1.8(a)]

I hereby certify that this correspondence is being:

☐ Deposited with the United States Postal Service on the date shown below with sufficient postage as first class mail in an envelope addressed to: Mail Stop Petition, Commissioner for Patents, P. O. Box 1450, Alexandria, VA 22313-1450.

☐ Transmitted by facsimile on the date shown below to the United States Patent and Trademark Office at (571) 273-8300.

_____ _____
Date Signature

_____
Typed or printed name of person signing certificate

Privacy Act Statement

The **Privacy Act of 1974 (P.L. 93-579)** requires that you be given certain information in connection with your submission of the attached form related to a patent application or patent. Accordingly, pursuant to the requirements of the Act, please be advised that: (1) the general authority for the collection of this information is 35 U.S.C. 2(b)(2); (2) furnishing of the information solicited is voluntary; and (3) the principal purpose for which the information is used by the U.S. Patent and Trademark Office is to process and/or examine your submission related to a patent application or patent. If you do not furnish the requested information, the U.S. Patent and Trademark Office may not be able to process and/or examine your submission, which may result in termination of proceedings or abandonment of the application or expiration of the patent.

The information provided by you in this form will be subject to the following routine uses:

1. The information on this form will be treated confidentially to the extent allowed under the Freedom of Information Act (5 U.S.C. 552) and the Privacy Act (5 U.S.C 552a). Records from this system of records may be disclosed to the Department of Justice to determine whether disclosure of these records is required by the Freedom of Information Act.
2. A record from this system of records may be disclosed, as a routine use, in the course of presenting evidence to a court, magistrate, or administrative tribunal, including disclosures to opposing counsel in the course of settlement negotiations.
3. A record in this system of records may be disclosed, as a routine use, to a Member of Congress submitting a request involving an individual, to whom the record pertains, when the individual has requested assistance from the Member with respect to the subject matter of the record.
4. A record in this system of records may be disclosed, as a routine use, to a contractor of the Agency having need for the information in order to perform a contract. Recipients of information shall be required to comply with the requirements of the Privacy Act of 1974, as amended, pursuant to 5 U.S.C. 552a(m).
5. A record related to an International Application filed under the Patent Cooperation Treaty in this system of records may be disclosed, as a routine use, to the International Bureau of the World Intellectual Property Organization, pursuant to the Patent Cooperation Treaty.
6. A record in this system of records may be disclosed, as a routine use, to another federal agency for purposes of National Security review (35 U.S.C. 181) and for review pursuant to the Atomic Energy Act (42 U.S.C. 218(c)).
7. A record from this system of records may be disclosed, as a routine use, to the Administrator, General Services, or his/her designee, during an inspection of records conducted by GSA as part of that agency's responsibility to recommend improvements in records management practices and programs, under authority of 44 U.S.C. 2904 and 2906. Such disclosure shall be made in accordance with the GSA regulations governing inspection of records for this purpose, and any other relevant (*i.e.*, GSA or Commerce) directive. Such disclosure shall not be used to make determinations about individuals.
8. A record from this system of records may be disclosed, as a routine use, to the public after either publication of the application pursuant to 35 U.S.C. 122(b) or issuance of a patent pursuant to 35 U.S.C. 151. Further, a record may be disclosed, subject to the limitations of 37 CFR 1.14, as a routine use, to the public if the record was filed in an application which became abandoned or in which the proceedings were terminated and which application is referenced by either a published application, an application open to public inspection or an issued patent.
9. A record from this system of records may be disclosed, as a routine use, to a Federal, State, or local law enforcement agency, if the USPTO becomes aware of a violation or potential violation of law or regulation.

UNITED STATES PATENT AND TRADEMARK OFFICE

Commissioner for Patents
United States Patent and Trademark Office
P.O. Box 1450
Alexandria, VA 22313-1450
www.uspto.gov

COPY MAILED

MAR 1 0 2009

OFFICE OF PETITIONS

Duane Arthur Coon
11051 W. 1st St.
Star, ID 83669

In re Application of Coon :
Application No. 10/788,213 : Decision on Petition
Filing Date: February 27, 2004 :
For: Trowel :

This is a decision on the petition under 37 CFR 1.137(b), filed September 24, 2008, to revive the above-identified application.

The petition is **dismissed**.

Any request for reconsideration must be submitted within TWO (2) MONTHS from the mail date of this decision. No further petition fee is required for the request. Extensions of time under 37 CFR 1.136(a) are permitted. The reconsideration request should include a cover letter entitled "Renewed Petition under 37 CFR 1.137(b)." This is **not** final agency action within the meaning of 5 U.S.C. § 704.

A Notice of Allowability was mailed September 22, 2005. The Notice set a period for reply of three (3) months.

The Notice of Allowability stated,

> Applicant has THREE MONTHS ... to file a reply complying with the requirements noted below. Failure to timely comply will result in ABANDONMENT of this application....
>
> CORRECTED DRAWINGS ... must be submitted. [The drawings should include] changes required by the attached Examiner's Amendment.

The Examiner's Amendment mailed with the Notice of Allowability stated,

> The following changes to the drawings have been approved by the examiner and agreed upon by applicant....
>
> In order to avoid abandonment of the application, applicant must make these above agreed upon drawing changes. See the attached marked up copy of drawings.

Petitioner did not believe new drawings were required and did not submit new drawings. As a result, the application became abandoned on December 23, 2005.

A Notice of Abandonment was mailed July 26, 2006.

Petitioner filed a petition to withdraw the holding of abandonment on July 26, 2007.

A decision dismissing the petition was mailed September 19, 2007.

The instant petition was filed September 24, 2008, more than one year after a decision dismissing the prior petition was mailed.

37 CFR 1.137(b)(3) states a petition must include, with emphasis added,

> A statement that the entire delay in filing the required reply from the due date for the reply until the filing of a grantable petition pursuant to this paragraph was unintentional. *The Director may require additional information where there is a question whether the delay was unintentional.*

Petitioner has previously submitted an explanation for the delay in the filing of the July 26, 2007 petition to withdraw the holding of abandonment. Specifically, the July 26, 2007, petition indicated that, due to the place which handles his mail improperly failing to timely deliver all of his mail, he did not actually receive the Notice of Abandonment until the day before he mailed the petition to withdraw the holding of abandonment.

Petitioner has not provided an explanation for the year of delay between the Office issuing a decision on the prior petition and the filing of the instant petition. Petitioner should provide an explanation for the delay. Petitioner may wish to note petitioner does not need to prove the delay was unavoidable. The only issue that must be addresses is whether or not the delay was intentional.

Petitioner should feel free to call Petitions Attorney Steven Brantley at the phone number as the end of this decision if he has any questions concerning the information being requested.

Further correspondence with respect to this matter should be addressed as follows:

By mail: Mail Stop Petition
Commissioner for Patents
P.O. Box 1450
Alexandria, VA 22313-1450

By facsimile: (571) 273-8300
Attn: Office of Petitions

Telephone inquiries regarding this communication should be directed to Petitions Attorney Steven Brantley at (571) 272-3203.

Charles Steven Brantley
Senior Petitions Attorney
Office of Petitions

UNITED STATES PATENT AND TRADEMARK OFFICE

Commissioner for Patents
United States Patent and Trademark Office
P.O. Box 1450
Alexandria, VA 22313-1450
www.uspto.gov

Duane Arthur Coon
11051 W. 1st St.
Star, ID 83669

MAILED

MAY 07 2009

OFFICE OF PETITIONS

In re Application of Coon :
Application No. 10/788,213 : Decision on Petition
Filing Date: February 27, 2004 :
For: Trowel :

This is a decision on the renewed petition under 37 CFR 1.137(b), filed April 15, 2009, and supplemented May 5, 2009, to revive the above-identified application.

The petition is **granted**.

Facts

A Notice of Allowability was mailed September 22, 2005. The Notice set a period for reply of three (3) months. The Notice of Allowability stated,

> Applicant has THREE MONTHS ... to file a reply complying with the requirements noted below. Failure to timely comply will result in ABANDONMENT of this application....
>
> CORRECTED DRAWINGS ... must be submitted. [The drawings should include] changes required by the attached Examiner's Amendment.

The Examiner's Amendment mailed with the Notice of Allowability stated,

> The following changes to the drawings have been approved by the examiner and agreed upon by applicant....
>
> In order to avoid abandonment of the application, applicant must make these above agreed upon drawing changes. See the attached marked up copy of drawings.

Petitioner did not believe new drawings were required and did not submit new drawings. As a result, the application became abandoned on December 23, 2005.

A Notice of Abandonment was mailed July 26, 2006.

Petitioner filed a petition to withdraw the holding of abandonment on July 26, 2007. A decision dismissing the petition was mailed September 19, 2007.

A petition under 37 CFR 1.137(b) was filed September 24, 2008. A decision dismissing the petition was mailed March 10, 2009.

Discussion

The instant petition requests revival of the application.

A grantable petition under 37 CFR 1.137(b) must be accompanied by:

(1) the reply required to the outstanding Office action or notice, unless previously filed,
(2) the petition fee,
(3) a statement that the entire delay in filing the required reply from the due date for the reply until the filing of a grantable petition pursuant to 37 CFR 1.137(b) was unintentional, and
(4) a terminal disclaimer and fee if the application was filed on or before June 8, 1995 or if the application is a design application.

Petitioner has submitted a reply to the Notice of Allowability in the form of corrected drawings. Petitioner has submitted the required petition fee. Petitioner has stated the entire delay in filing the required reply from the due date for the reply until the filing of a grantable petition pursuant to 37 CFR 1.137(b) was unintentional.

Petitioner has met the requirements to revive the above-identified application pursuant to 37 CFR 1.137(b). Therefore, the petition is granted and the application is revived.

The Office of Data Management ("ODM") will be informed of the instant decision. Thereafter, ODM will take steps to have the application issued as a patent in due course. *If* ODM determines any requirement necessary for a patent to issue has not been met, ODM will notify petitioner of the requirement and provide petitioner with a time period within which to satisfy the requirement.

Telephone inquiries regarding this communication should be directed to Petitions Attorney Steven Brantley at (571) 272-3203.

Charles Steven Brantley
Senior Petitions Attorney
Office of Petitions

UNITED STATES PATENT AND TRADEMARK OFFICE

UNITED STATES DEPARTMENT OF COMMERCE
United States Patent and Trademark Office
Address: COMMISSIONER FOR PATENTS
P.O. Box 1450
Alexandria, Virginia 22313-1450
www.uspto.gov

ADVANCED MICRO DEVICES, INC.
C/O VEDDER PRICE P.C.
222 N.LASALLE STREET
CHICAGO, IL 60601

Mail Date: 04/21/2010

Applicant	: Jeffrey T. Brady	: DECISION ON REQUEST FOR
Patent Number	: 7594069	: RECALCULATION of PATENT
Issue Date	: 09/22/2009	: TERM ADJUSTMENT IN VIEW
Appliction No	: 10/788,225	: OF WYETH AND NOTICE OF INTENT TO
Filed	: 02/26/2004	: ISSUE CERTIFICATE OF CORRECTION
		:

The Request for Recalculation is **GRANTED** to the extent indicated.

The patent term adjustment has been determined to be **119** days. The USPTO will *sua sponte* issue a certificate of correction reflecting the amount of PTA days determined by the recalculation.

Prior to the issuance of the certificate of correction, the USPTO will afford patentee an opportunity to be heard and request reconsideration. Accordingly, patentee has **one month or thirty (30) days**, whichever is longer, to file a request for reconsideration of this patent term adjustment calculation. See 35 U.S.C. 154(b)(3)(B)(ii) and 37 CFR 1.322(a)(4). No extensions of time will be granted under 37 CFR 1.136.

Patentee should use document code PET.OP if electronically filing a request for reconsideration of this patent term adjustment calculation. The patentee must also include the information required by 37 CFR 1.705(b)(2) and the fee required by 37 CFR 1.18(e). If patentee does not file a timely request for reconsideration of this patent term adjustment calculation including the information required by 37 CFR 1.705(b)(2) and the fee required by 37 CFR 1.18(e), the USPTO will issue a certificate of correction reflecting the PTA determination noted above.

Patentee should be aware that in order to preserve the right to review in the United States District Court for the District of Columbia of the USPTO patent term adjustment determination, patentee must ensure that he or she also take the steps required under 35 U.S.C. 154(b)(4)(A) in a timely manner. Nothing in the request for recalculation should be construed as providing an alternative time frame for commencing a civil action under 35 U.S.C. 154(b)(4)(A).

Any questions concerning this decision should be directed to the Office of Patent Legal Administration at 571-272-7702.

UNITED STATES PATENT AND TRADEMARK OFFICE

UNITED STATES DEPARTMENT OF COMMERCE
United States Patent and Trademark Office
Address: COMMISSIONER FOR PATENTS
P.O. Box 1450
Alexandria, Virginia 22313-1450
www.uspto.gov

MCANDREWS HELD & MALLOY, LTD
500 WEST MADISON STREET
SUITE 3400
CHICAGO, IL 60661

Mail Date: 04/21/2010

Applicant	: Marc Zabeau	: DECISION ON REQUEST FOR
Patent Number	: 7584058	: RECALCULATION of PATENT
Issue Date	: 09/01/2009	: TERM ADJUSTMENT IN VIEW
Appliction No	: 10/788,260	: OF WYETH AND NOTICE OF INTENT TO
Filed	: 02/26/2004	: ISSUE CERTIFICATE OF CORRECTION
		:

The Request for Recalculation is **GRANTED** to the extent indicated.

The patent term adjustment has been determined to be **706** days. The USPTO will *sua sponte* issue a certificate of correction reflecting the amount of PTA days determined by the recalculation.

Prior to the issuance of the certificate of correction, the USPTO will afford patentee an opportunity to be heard and request reconsideration. Accordingly, patentee has **one month or thirty (30) days**, whichever is longer, to file a request for reconsideration of this patent term adjustment calculation. See 35 U.S.C. 154(b)(3)(B)(ii) and 37 CFR 1.322(a)(4). No extensions of time will be granted under 37 CFR 1.136.

Patentee should use document code PET.OP if electronically filing a request for reconsideration of this patent term adjustment calculation. The patentee must also include the information required by 37 CFR 1.705(b)(2) and the fee required by 37 CFR 1.18(e). If patentee does not file a timely request for reconsideration of this patent term adjustment calculation including the information required by 37 CFR 1.705(b)(2) and the fee required by 37 CFR 1.18(e), the USPTO will issue a certificate of correction reflecting the PTA determination noted above.

Patentee should be aware that in order to preserve the right to review in the United States District Court for the District of Columbia of the USPTO patent term adjustment determination, patentee must ensure that he or she also take the steps required under 35 U.S.C. 154(b)(4)(A) in a timely manner. Nothing in the request for recalculation should be construed as providing an alternative time frame for commencing a civil action under 35 U.S.C. 154(b)(4)(A).

Any questions concerning this decision should be directed to the Office of Patent Legal Administration at 571-272-7702.

UNITED STATES PATENT AND TRADEMARK OFFICE

Commissioner for Patents
United States Patent and Trademark Office
P.O. Box 1450
Alexandria, VA 22313-1450
www.uspto.gov

COPY MAILED

MAY 2 2 2006

OFFICE OF PETITIONS

MATTINGLY, STANGER & MALUR, P.C.
SUITE 370
1800 DIAGONAL ROAD
ALEXANDRIA VA 22314

In re Application of	:	
Taro Ogawa et al	:	
Application No. 10/788,275	:	ON PETITION
Filed: March 1, 2004	:	
Attorney Docket No. ASA-1166	:	

This is a decision on the petition, filed May 18, 2006, under 37 CFR 1.313(c)(2) to withdraw the above-identified application from issue after payment of the issue fee.

The petition is **GRANTED.**

The above-identified application is withdrawn from issue for consideration of a submission under 37 CFR 1.114 (request for continued examination). See 37 CFR 1.313(c)(2).

Petitioner is advised that the issue fee paid on April 25, 2006, in the above-identified application cannot be refunded. If, however, the above-identified application is again allowed, petitioner may request that it be applied towards the issue fee required by the new Notice of Allowance.[1]

Telephone inquiries should be directed to the undersigned at (571) 272-3208.

The examiner of Technology Center AU 2884 will consider the request for continued examination under 37 CFR 1.114.

Karen Creasy

Karen Creasy
Petitions Examiner
Office of Petitions

---

[1] The request to apply the issue fee to the new Notice may be satisfied by completing and returning the new Issue Fee Transmittal Form PTOL-85(b), which includes the following language thereon: "Commissioner for Patents is requested to apply the Issue Fee and Publication Fee (if any) or re-apply any previously paid issue fee to the application identified above." Petitioner is advised that, whether a fee is indicated as being due or not, the Issue Fee Transmittal Form **must** be completed and timely submitted to avoid abandonment. Note the language in bold text on the first page of the Notice of Allowance and Fee(s) Due (PTOL-85).

UNITED STATES PATENT AND TRADEMARK OFFICE

COMMISSIONER FOR PATENTS
UNITED STATES PATENT AND TRADEMARK OFFICE
P.O. BOX 1450
ALEXANDRIA, VA 22313-1450
www.uspto.gov

HUMAN GENOME SCIENCES INC
INTELLECTUAL PROPERTY DEPT.
14200 SHADY GROVE ROAD
ROCKVILLE MD 20850

COPY MAILED

JUL 0 6 2005

OFFICE OF PETITIONS

Applicant: Hastings et al.
Appl. No.: 10/788,346
Filing Date: Match 1, 2004
Title: HUMAN NEURONAL ATTACHMENT FACTOR-1
Attorney Docket No.: PF226D2
Pub. No.: US 2004/01469928 A1
Pub. Date: July 29, 2004

This is a decision on the request for corrected of patent application publication under 37 CFR 1.221(b), filed on November 12, 2004, which is a copy of the paper filed August 17, 2004, for the above-identified application.

The request is granted.

Inquiries relating to this matter may be directed to Mark Polutta at (571) 272-7709 (voice).

Mark O. Polutta
Office of Patent Legal Administration
Office of the Deputy Commissioner
for Patent Examination Policy

UNITED STATES PATENT AND TRADEMARK OFFICE

Commissioner for Patents
United States Patent and Trademark Office
P.O. Box 1450
Alexandria, VA 22313-1450
www.uspto.gov

COPY MAILED

DEC 23 2009

OFFICE OF PETITIONS

HUMAN GENOME SCIENCES INC.
INTELLECTUAL PROPERTY DEPT.
14200 SHADY GROVE ROAD
ROCKVILLE MD 20850

In re Patent No. 7,485,459 :
Hastings et al. :
Issued: February 3, 2009: DECISION ON REQUEST FOR
Application No. 10/788,346 : RECONSIDERATION OF
Filed: March 1, 2004 : PATENT TERM ADJUSTMENT
Atty Docket No. PF226D2 :

This is in response to the "APPLICATION FOR PATENT TERM ADJUSTMENT UNDER 37 C.F.R. §1.705(d)," filed on April 3, 2009. Patentees request that the patent term adjustment indicated on the face of the patent be corrected from 516 days to 905 days.

The request for reconsideration of patent term adjustment is **DISMISSED**.

On February 3, 2009, the above-identified application matured into US Patent No. 7,485,459 with a patent term adjustment of 516 days. This request for reconsideration of patent term adjustment (including the required fee) was timely filed within two months of the issue date of the patent. See 1.705(d).

The Office acknowledges submission of the $200.00 fee set forth in 37 CFR 1.18(e). No additional fees are required.

Patentees assert that they are entitled to additional patent term adjustment pursuant to Wyeth v. Dudas.[1] Patentees request recalculation of the patent term adjustment to include a 389 day period of adjustment pursuant to 37 C.F.R. §1.703(b). Patentees maintain entitlement to a period of adjustment due to the Three Year Delay by the Office, pursuant to 37 CFR § 1.703(b), of 389

[1] 580 F. Supp. 2d 138, 88 U.S.P.Q. 2d 1538 (D.D.C. 2008).

days and the period of adjustment due to other examination delay, pursuant to 37 CFR §1.702(a), of 607 days.

Under 37 CFR § 1.703(f), patentees are entitled to a period of patent term adjustment equal to the period of delays based on the grounds set forth in 37 CFR §1.702 reduced by the period of time equal to the period of time during which patentees failed to engage in reasonable efforts to conclude prosecution pursuant to 37 CFR §1.704. In other words, the period of Office delay reduced by the period of applicant delay. The period of applicant delay is 91 days.

The 389 day period is calculated based on the application having been filed under 35 U.S.C. §111(a) in March 1, 2004. On June 24, 2008, a request for continued examination was filed. The filing of an RCE cuts off the ability to accumulate any additional patent term adjustment under the three-year pendency provision. The period beginning on the day the RCE is filed to the issue date of the patent is excluded from the period under § 1.702(b). As such, the period in this instance is 510 days, counting the number of days in the period beginning on March 1, 2007, and ending on June 23, 2008, the day prior to the date the RCE was filed.

Further, the period for appellate review is excluded from the three-year period. On March 24, 2008, a notice of appeal was filed. The period for appellate review ended on July 24, 2008 with the filing of a RCE. The period beginning on March 24, 2008, and ending on July 24, 2008, is 123 days. Accordingly, a 123 day period should have been excluded from the period of adjustment under 35 U.S.C. 154(b)(1)(B) and 37 CFR 1.702(b). Thus, the period of adjustment under 35 U.S.C. 154(b)(1)(B) and 37 CFR 1.702(b) is 387 (510 - 123) days, not 389 days as asserted by patentees.

Regardless, patentees' calculation of the period of overlap is inconsistent with the Office's interpretation of this provision. 35 U.S.C. 154(b)(2)(A) limits the adjustment of patent term, as follows:

> to the extent that the periods of delay attributable to grounds specified in paragraph (1) overlap, the period of any adjustment granted under this subsection shall not exceed the actual number of days the issuance of the

patent was delayed.

Likewise, 37 CFR 1.703(f) provides that:

> To the extent that periods of delay attributable to the grounds specified in §1.702 overlap, the period of adjustment granted under this section shall not exceed the actual number of days the issuance of the patent was delayed.

As explained in *Explanation of 37 CFR 1.703(f) and of the United States Patent and Trademark Office Interpretation of 35 U.S.C. 154(b)(2)(A)*, 69 Fed. Reg. 34283 (June 21, 2004), the Office interprets 35 U.S.C. 154(b)(2)(A) as permitting either patent term adjustment under 35 U.S.C. 154(b)(1)(A)(i)-(iv), or patent term adjustment under 35 U.S.C. 154(b)(1)(B), but not as permitting patent term adjustment under both 35 U.S.C. 154(b)(1)(A)(i)-(iv) and 154(b)(1)(B). Accordingly, the Office implements the overlap provision as follows:

> If an application is entitled to an adjustment under 35 U.S.C. 154(b)(1)(B), the entire period during which the application was pending (except for periods excluded under 35 U.S.C. 154(b)(1)(B)(i)-(iii)), and not just the period beginning three years after the actual filing date of the application, is the period of delay under 35 U.S.C. 154(b)(1)(B) in determining whether periods of delay overlap under 35 U.S.C. 154(b)(2)(A). Thus, any days of delay for Office issuance of the patent more than 3 years after the filing date of the application, which overlap with the days of patent term adjustment accorded prior to the issuance of the patent will not result in any additional patent term adjustment. See 35 U.S.C. 154(b)(1)(B), 35 U.S.C. 154(b)(2)(A), and 37 CFR § 1.703(f). See *Changes to Implement Patent Term Adjustment Under Twenty Year Term; Final Rule*, 65 Fed. Reg. 56366 (Sept. 18, 2000). See also *Revision of Patent Term Extension and Patent Term Adjustment Provisions; Final Rule*, 69 Fed. Reg. 21704 (April 22, 2004), 1282 Off. Gaz. Pat. Office 100 (May 18, 2004). See also *Explanation of 37 CFR 1.703(f) and of the United States Patent and Trademark Office Interpretation of 35 U.S.C. 154(b)(2)(A)*, 69 Fed. Reg. 34283 (June 21, 2004).

Further, as stated in the *Explanation of 37 CFR 1.703(f) and of the United States Patent and Trademark Office Interpretation of 35 U.S.C. 154(b)(2)(A)*, the Office has consistently taken the position that if an application is entitled to an adjustment under the three-year pendency provision of 35 U.S.C. 154(b)(1)(B), the entire period during which the application was pending before the Office (except for periods excluded under 35 U.S.C. 154(b)(1)(B)(i)-(iii)), and not just the period beginning three years after the actual filing date of the application, is the relevant period under 35 U.S.C. 154(b)(1)(B) in determining whether periods of delay "overlap" under 35 U.S.C. 154(b)(2)(A).

This interpretation is consistent with the statute. Taken together the statute and rule provide that to the extent that periods of delay attributable to grounds specified in 35 U.S.C. 154(b)(1) and in corresponding §1.702 overlap, the period of adjustment granted shall not exceed the actual number of days the issuance of the patent was delayed.

In this instance, the relevant period under 35 U.S.C. 154(b)(1)(B) in determining whether periods of delay "overlap" under 35 U.S.C. 154(b)(2)(A) is the period during which the application was pending before the Office beginning on the application filing date under 35 U.S.C. 111(a), March 1, 2004, and ending on July 23, 2008, the day prior to the date of filing of a request for continued examination (RCE) (not including any other periods excluded under 35 U.S.C. 154(b)(1)(B)(i)-(iii)). As such, the 123 day period consumed by appellate review is excluded.

Pursuant to 35 U.S.C. 154(b)(1)(A) and 37 CFR 1.702(a)(1), 607 days of patent term adjustment were accorded prior to the filing of the RCE for the Office failing to respond within a specified time frame. Pursuant to 35 U.S.C. 154(b)(1)(B) and 37 CFR 1.702(b), 387 (510 - 123) days of patent term adjustment accrued for Office issuance of the patent more than 3 years after the filing date of the application.

The 387 days for Office delay in issuance of the patent, overlap with the 607 days of Office delay accorded prior to the filing of the RCE. Entry of both the 387 days and the 607 days is neither permitted nor warranted. Considering the applicant delay of 91 days, 516 (607 - 91) days is determined to be the actual number days that the issuance of the patent was delayed.

Accordingly, at issuance, the Office properly entered no additional days of patent term adjustment for the Office taking in excess of 3 years to issue the patent.

In view thereof, no adjustment to the patent term will be made.

Telephone inquiries specific to this matter should be directed to Douglas I. Wood, Senior Petitions Attorney, at (571) 272-3231.

Nancy Johnson

Anthony Knight
Supervisor
Office of Petitions

UNITED STATES PATENT AND TRADEMARK OFFICE

Commissioner for Patents
United States Patent and Trademark Office
P.O. Box 1450
Alexandria, VA 22313-1450
www.uspto.gov

MATTINGLY, STANGER, MALUR & BRUNDIDGE, P.C.
1800 DIAGONAL ROAD
SUITE 370
ALEXANDRIA, VA 22314

MAILED

APR 26 2006

TECHNOLOGY CENTER 2100

In re Application of: Fujibayashi, et al.
Application No. 10/788,390
Filed: March 1, 2004
For: METHOD AND APPARATUS FOR DATA MIGRATION WITH THE EFFICIENT USE OF OLD ASSESTS

DECISION ON PETITION
TO MAKE SPECIAL
(ACCELERATED EXAMINATION)
UNDER M.P.E.P. §708.02 (VIII)

This is a decision on the petition to make special under 37 C.F.R. §102(d) and M.P.E.P. §708.02(VIII): Accelerated Examination, filed on January 17, 2006.

The Petition is **GRANTED**.

M.P.E.P. §708.02, Section VIII which sets out the prerequisites for a grantable petition for Accelerated Examination under 37 C.F.R. §1.102(d) states in relevant part:

A new application (one which has not received any examination by the examiner) may be granted special status provided that applicant (and this term includes applicant's attorney or agent) complies with each of the following items:

(a) Submits a petition to make special accompanied by the fee set forth in 37 CFR 1.17(h);

(b) Presents all claims directed to a single invention, or if the Office determines that all the claims presented are not obviously directed to a single invention, will make an election without traverse as a prerequisite to the grant of special status;

(c) Submits a statement(s) that a pre-examination search was made, listing the field of search by class and subclass, publication, Chemical Abstracts, foreign patents, etc. The pre-examination search must be directed to the invention as claimed in the application for which special status is requested. A search made by a foreign patent office satisfies this requirement;

(d) Submits one copy each of the references deemed most closely related to the subject matter encompassed by the claims if said references are not already of record; and

(e) Submits a detailed discussion of the references, which discussion points out, with the particularity required by 37 CFR 1.111 (b) and (c), how the claimed subject matter is patentable over the references.

Petition to Make Special **GRANTED** since all of the requirements for special status under MPEP § 708.02(VIII) have been met.

The application file is being forwarded to the Examiner for accelerated examination in accordance with M.P.E.P. §708.02, Section VIII. If the application is subsequently allowed, it will be given priority for printing. See M.P.E.P. §1309.

Brian L. Johnson
Special Program Examiner
Technology Center 2100
Computer Architecture, Software and Information Security
571-272-3595

OIPE
OCT 14 2004
PATENT & TRADEMARK OFFICE

FILE COPY

Docket No.: IK-0081

PATENT

IN THE UNITED STATES PATENT AND TRADEMARK OFFICE

In re Application of	Confirmation No.: 7404
Il Gyeong GO and Young-Gun MIN	Group Art Unit: 1744
Serial No.: 10/788,396	Examiner: Terrence R. TILL
Filed: March 1, 2004	**Customer No.: 34610**

For: DUST COLLECTING UNIT OF VACUUM CLEANER

PETITION TO MAKE SPECIAL
UNDER 37 C.F.R. 1.102(d) and MPEP § 708.02(VIII)

U.S. Patent and Trademark Office
220 20th St. S.
Customer Window,
Crystal Plaza Two, Lobby, Room 1B03
Arlington, VA 22202

Sir:

Applicants hereby Petition to make this application special. In support of this request for accelerated examination, Applicants respectfully submit that 1) the fee set forth in 37 C.F.R. 1.17(h) of $130.00 is attached; 2) all claims presented are directed to a single invention; 3) should the Patent Office determine that all claims presented are not drawn to a single invention, Applicants will make an election without traverse as a prerequisite to granting special status; 4) a pre-examination search was made by the undersigned; 5) a copy of each of the references deemed most closely related to the subject matter encompassed by the claims are submitted herewith along with an Information Disclosure Statement; and 6) a detailed discussion is

10/15/2004 FFANAEIA 00000046 10788396
01 FC:1460 130.00 OP

PETITION GRANTED

Richard Crispino
Special Program Examiner
TC 1700 FEB 28 2005

UNITED STATES PATENT AND TRADEMARK OFFICE

Commissioner for Patents
United States Patent and Trademark Office
P.O. Box 1450
Alexandria, VA 22313-1450
www.uspto.gov

MAIL

JUL 2 2 2005

DIRECTOR OFFICE
TECHNOLOGY CENTER 2600

REED SMITH LLP
Suite 1400
3110 Fairview Park Drive
Falls Church VA 22042

In re Application of
SUZUKI, HIROSHI, et al.
Application No. 10/788,401
Filed: March 1, 2004
For: **STORAGE SYSTEM**

DECISION ON PETITION
TO MAKE SPECIAL

This is a decision on the petition filed June 27, 2005 under Manual of Patent Examination Procedure §708.02, VIII requesting accelerated examination.

The petition under Manual of Patent Examination Procedure §708.02, VIII, must:
(1) be filed prior to receiving any examination by the examiner,
(2) be accompanied by the required fee- $130,
(3) the claims should be directed to a single invention (if it is determined that the claims pertain to more than one invention, then applicant will have to make an election without traverse or forfeit accelerated examination status),
(4) state that a pre-examination search was made, and fully discuss the search method employed, such as classes and subclasses searched, publications, Chemical abstracts, patents, etc. A search made by a foreign patent office satisfies this requirement,
(5) be accompanied by a copy of each of the references most closely related to the subject matter encompassed by the claims if said references are not already of record,
(6) fully discuss the references, pointing out with the particularity required by 37 C.F.R. §1.111 (b) and (c), how the claimed subject matter is patentable over the references.

The petitioner meets all the above-listed requirements. Accordingly, the petition is **GRANTED**.

The application will retain its special status throughout its entire prosecution, including any appeal to the Board of Patent Appeals and Interferences, subject only to diligent prosecution by the applicant. The application file is being forwarded to the examiner for appropriate action in due course.

Kenneth A. Wieder
Special Program Examiner
Technology Center 2600
Communications

UNITED STATES PATENT AND TRADEMARK OFFICE

Commissioner for Patents
United States Patent and Trademark Office
P.O. Box 1450
Alexandria, VA22313-1450
www.uspto.gov

ROBERT W.B. BAILEY
BOX 2
STATION L
WINNIPEG MB R3H 0Z4 CA CANADA

COPY MAILED

SEP 17 2007

OFFICE OF PETITIONS

In re Application of
Reginald B. Harder
Application No. 10/788,402
Filed: March 1, 2004
Attorney Docket No: 414-1US

ON PETITION

This is a decision on the petition filed August 28, 2007 which is treated under 37 CFR 1.181.

The petition is DISMISSED.

Any request for reconsideration of this decision must be submitted within **TWO (2) MONTHS** from the mail date of this decision. Extensions of time under 37 CFR 1.136(a) are permitted. The reconsideration request should include a cover letter entitled "Renewed Petition under 37 CFR 1.181," or, as explained in more detail below," ...under 37 CFR 1.137(a)" or (b). This is not a final agency decision.

A Notice to File Missing Parts was mailed May 19, 2004 and set a two month period for reply. A response was filed August 2, 2004, and is of record, however without an extension of time and thus the application became abandoned for failure to file a timely reply. Accordingly, a Notice of Abandonment was mailed August 24, 2007.

Petitioner alleges that the response was deposited with Federal Express on July 15, 2004 and delivered to Patent Providers, Inc. on August 2, 2004 who in turn delivered the response to the USPTO on August 2, 2004.

The statutory authority for the granting of filing date based on the date of deposit for correspondence sent by "Express Mail" and received by the Office found in section 21(a) of Title 35 of the United States Code. The specific rule for obtaining a filing date as of the date of deposit in "Express Mail" (rather than the date of receipt at the Office) is 37 CFR 1.10. However, 35 USC 21(a) is limited to correspondence deposited with the United States Postal Service (USPS). The procedure in 37 CFR 1.10 is limited to correspondence deposited in the "Express Mail Post Office to Addressee" service of the

USPS. There are no similar provisions and no similar benefit can be obtained for correspondence deposited in Federal Express or any other Express Mail service. *See MPEP 513.*

The petition therefore must be dismissed because the present application was not sent to the USPTO using the Express Mail service of the United States Postal Service but instead was sent by Federal Express. 37 CFR 1.10 does not afford protection to papers that are not sent by the Express Mail Service of the United States Postal Service. As such, the response date must be accorded the actual date of receipt in the Office, which is August 2, 2004.[1] While it is unfortunate that the application was not received in the USPTO within two months of the date the Notice to File Missing Parts was mailed, applicant did not avail himself of the protections available under 37 CFR 1.10 or any other Office procedures. As such, the Office must rely on the official record, which shows that the response was received on August 2, 2004.

Petitioner may wish to file a petition to revive under 37 CFR 1.137(a) or (b). Section 1.137(b) now provides that where the delay in reply was unintentional, a petition may be filed to revive an abandoned application or a lapsed patent pursuant to 37 CFR 1.137(b). A grantable petition pursuant to 37 CFR 1.137(b) must be accompanied by:

> (1) the required reply, unless previously filed. In a nonprovisional application abandoned for failure to prosecute, the required reply may be met by the filing of a continuing application. In an application or patent, abandoned or lapsed for failure to pay the issue fee or any portion thereof, the required reply must be the payment of the issue fee or any outstanding balance thereof;
>
> (2) the petition fee as set forth in 37 CFR 1.17(m) ($675.00);
>
> (3) a statement that the entire delay in filing the required reply from the due date for the reply until the filing of a grantable petition pursuant to 37 CFR 1.137(b) was unintentional. The Commissioner may required additional information where there is a question whether the delay was unintentional; and
>
> (4) any terminal disclaimer (and fee as set forth in 37 CFR 1.20(d)) required pursuant to 37 CFR 1.137(c)).

The filing of a petition under the unintentional standard cannot be intentionally delayed and therefore should be filed promptly. A person seeking revival due to unintentional

---

[1] 37 CFR 1.8

delay cannot make a statement that the delay was unintentional unless the entire delay, including the delay from the date it was discovered that the application was abandoned until the filing of the petition to revive under 37 CFR 1.137(b), was unintentional. A statement that the delay was unintentional is not appropriate if petitioner intentionally delayed the filing of a petition for revival under 37 CFR 1.137(b).

Further correspondence with respect to this matter should be addressed as follows:

By mail: Mail Stop Petition
Commissioner for Patents
P.O. Box 1450
Alexandria, VA 22313-1450

By FAX: (571) 273-8300

Telephone inquiries concerning this matter may be directed to the undersigned Petitions Attorney at (571) 272-3212.

Patricia Faison-Ball
Senior Petitions Attorney
Office of Petitions

UNITED STATES PATENT AND TRADEMARK OFFICE

Commissioner for Patents
United States Patent and Trademark Office
P.O. Box 1450
Alexandria, VA22313-1450
www.uspto.gov

ROBERT W.B. BAILEY
BOX 2
STATION L
WINNIPEG MB R3H 0Z4 CA CANADA

COPY MAILED

NOV 28 2007

OFFICE OF PETITIONS

In re Application of
Reginald B. Harder
Application No. 10/788,402
Filed: March 1, 2004
Attorney Docket No: 414-1US

ON PETITION

This is a decision on the petition filed October 18, 2007 under 37 CFR 1.137(a) [1] for revival of the above-identified application.

The petition under 37 CFR 1.137(a) is **DISMISSED**.

Any request for reconsideration of this decision must be submitted within TWO (2) MONTHS from the mail date of this decision. Extensions of time under 37 CFR 1.136(a) are permitted. The reconsideration request should include a cover letter entitled "Renewed Petition under 37 CFR 1.137(a)" or "Renewed Petition under 37 CFR 1.137(b)." This is not a final agency decision.

A Notice to File Missing Parts was mailed May 19, 2004 and set a two month period for reply. A response was filed August 2, 2004, and is of record, however without an extension of time and thus the application became abandoned for failure to file a timely reply. Accordingly, a Notice of Abandonment was mailed August 24, 2007.

Petitioner alleges that the response was deposited with Federal Express on July 15, 2004 and delivered to Patent Providers, Inc. on August 2, 2004 who in turn delivered the response to the USPTO on August 2, 2004.

This petition lacks item (3) above.

---

[1] A grantable petition under 37 CFR 1.137(a) must be accompanied by:

(1) the required reply, unless previously filed; In a nonprovisional application abandoned for failure to prosecute, the required reply may be met by the filing of a continuing application. In a nonprovisional utility or plant application filed on or after June 8, 1995, and abandoned for failure to prosecute, the required reply may also be met by the filing of a request for continued examination in compliance with § 1.114. In an application or patent, abandoned or lapsed for failure to pay the issue fee or any portion thereof, the required reply must be the payment of the issue fee or any outstanding balance thereof.

(2) the petition fee as set forth in 37 CFR 1.17(l);

(3) a showing to the satisfaction of the Commissioner that the entire delay in filing the required reply from the due date for the reply until the filing of a grantable petition pursuant to 37 CFR 1.137(a) was unavoidable; and

(4) any terminal disclaimer (and fee as set forth in 37 CFR 1.20(d)) required pursuant to 37 CFR 1.137©)).

PETITION UNDER 37 CFR 1.137(a)

The Commissioner may revive an abandoned application if the delay in responding to the relevant outstanding Office requirement is shown to the satisfaction of the Commissioner to be "unavoidable".[2] Decisions on reviving abandoned applications on the basis of "unavoidable" delay have adopted the reasonably prudent person standard in determining if the delay was unavoidable:

> The word 'unavoidable' . . . is applicable to ordinary human affairs, and requires no more or greater care or diligence than is generally used and observed by prudent and careful men in relation to their most important business. It permits them in the exercise of this care to rely upon the ordinary and trustworthy agencies of mail and telegraph, worthy and reliable employees, and such other means and instrumentalities as are usually employed in such important business. If unexpectedly, or through the unforeseen fault or imperfection of these agencies and instrumentalities, there occurs a failure, it may properly be said to be unavoidable, all other conditions of promptness in its rectification being present.[3]

The showing of record is inadequate to establish unavoidable delay within the meaning of 35 U.S.C. § 133 and 37 CFR 1.137(a).[4] Specifically, an application is "unavoidably" abandoned only where petitioner, or counsel for petitioner, takes all action necessary for a proper response to the outstanding Office action, but through the intervention of unforeseen circumstances, such as failure of mail, telegraph, facsimile, or the negligence of otherwise reliable employees, the response is not timely received in the Office.[5]

Rather than unavoidable delay, the showing of record is that the means by which petitioner chose and entrusted the delivery of the response to the Notice to File Missing Parts did not reliably and timely deliver the package. Petitioner has not provided any evidence that FEDEX met with circumstances that was outside of their control in timely delivering the package to Patent Providers Inc. Neither has petitioner provided any

---

[2]35 U.S.C. § 133.

[3]In re Mattullath, 38 App. D.C. 497, 514-15 (1912)(quoting Ex parte Pratt, 1887 Dec. Comm'r Pat. 31, 32-33 (1887)); see also Winkler v. Ladd, 221 F. Supp. 550, 552, 138 USPQ 666, 167-68 (D.D.C. 1963), aff'd, 143 USPQ 172 (D.C. Cir. 1963); Ex parte Henrich, 1913 Dec. Comm'r Pat. 139, 141 (1913). In addition, decisions on revival are made on a "case-by-case basis, taking all the facts and circumstances into account." Smith v. Mossinghoff, 671 F.2d 533, 538, 213 USPQ 977, 982 (D.C. Cir. 1982). Finally, a petition cannot be granted where a petitioner has failed to meet his or her burden of establishing that the delay was "unavoidable." Haines v. Quigg, 673 F. Supp. 314, 316-17, 5 USPQ2d 1130, 1131-32 (N.D. Ind. 1987).

[4]See MPEP 711(c)(III)(C)(2) for a discussion of the requirements for a showing of unavoidable delay.

[5]Ex parte Pratt, 1887 Dec. Comm'r Pat. 31 (Comm'r Pat. 1887).

evidence that it was reasonable to believe that the package mailed July 14, 2004 from CANADA could be delivered to Patent Providers Inc in the UNITED STATES and then to the USPTO between July 14, 2004 and July 19, 2004, the due date for timely response to the Notice to File Missing Parts mailed on May 19, 2004. Did FEDEX guarantee delivery to Patent Providers, Inc. within a specified amount of time and then due to some unforseen circumstance was unable to do so?

The statutory authority for the granting of filing date based on the date of deposit for correspondence sent by "Express Mail" and received by the Office found in section 21(a) of Title 35 of the United States Code. The specific rule for obtaining a filing date as of the date of deposit in "Express Mail" (rather than the date of receipt at the Office) is 37 CFR 1.10. However, 35 USC 21(a) is limited to correspondence deposited with the United States Postal Service (USPS). The procedure in 37 CFR 1.10 is limited to correspondence deposited in the "Express Mail Post Office to Addressee" service of the USPS. There are no similar provisions and no similar benefit can be obtained for correspondence deposited in Federal Express or any other Express Mail service. *See MPEP 513.*

The petition therefore must be dismissed because the present application was not sent to the USPTO using the Express Mail service of the United States Postal Service but instead was sent by Federal Express. 37 CFR 1.10 does not afford protection to papers that are not sent by the Express Mail Service of the United States Postal Service. As such, the response date must be accorded the actual date of receipt in the Office, which is August 2, 2004.[6] While it is unfortunate that the application was not received in the USPTO within two months of the date the Notice to File Missing Parts was mailed, applicant did not avail himself of the protections available under 37 CFR 1.10 or any other Office procedures. As such, the Office must rely on the official record, which shows that the response was received on August 2, 2004.

Additionally, no evidence has been presented to rebut the presumption that petitioner acted diligently and responsibly in mailing the package containing the response in a timely manner. Thus the evidence presented does not constitute unavoidable delay and as the showing presented is insufficient to establish unavoidable delay within the meaning of 35 U.S.C. § 133 and 37 CFR 1.137(a), the petition will be dismissed.

ALTERNATIVE VENUE

Petitioner may wish to consider filing a renewed petition under 37 CFR 1.137(b)[7],

---

[6] 37 CFR 1.8

[7] Effective December 1, 1997, the provisions of 37 CFR 1.137(b) now provide that where the delay in reply was unintentional, a petition may be filed to revive an abandoned application or a lapsed patent pursuant to 37 CFR 1.137(b). A grantable petition filed under the provisions of 37 CFR 1.137(b) must be accompanied by:

which now provides that where the delay in reply was unintentional, a petition may be filed to revive an abandoned application or a lapsed patent pursuant to 37 CFR 1.137(b).

The filing of a petition under the unintentional standard cannot be intentionally delayed and therefore should be filed promptly. A person seeking revival due to unintentional delay cannot make a statement that the delay was unintentional unless the entire delay, including the delay from the date it was discovered that the application was abandoned until the filing of the petition to revive under 37 CFR 1.137(b), was unintentional. A statement that the delay was unintentional is not appropriate if petitioner intentionally delayed the filing of a petition for revival under 37 CFR 1.137(b). A petition under 37 CFR 1.137 (b) also carries with it a petition fee of $770.00 for a small entity and $1540.00 for a large entity and the $255.00 petition fee paid with the instant petition cannot be credited towards the fee for the petition under 37 CFR 1.137(b), if petitioner chooses to file such.

Further correspondence with respect to this matter should be addressed as follows:

By mail: Mail Stop Petitions
Commissioner for Patents
P.O. Box 1450
Alexandria VA 22313-1450

By FAX: (571) 273-8300
Attn: Office of Petitions

Telephone inquiries concerning this matter may be directed to the undersigned Petitions Attorney at (571) 272-3212.

Patricia Faison-Ball
Senior Petitions Attorney
Office of Petitions

---

(1) the required reply, unless previously filed. In a nonprovisional application abandoned for failure to prosecute, the required reply may be met by the filing of a continuing application. In an application or patent, abandoned or lapsed for failure to pay the issue fee or any portion thereof, the required reply must be the payment of the issue fee or any outstanding balance thereof.

(2) the petition fee as set forth in 37 CFR 1.17(m);

(3) a statement that the entire delay in filing the required reply from the due date for the reply until the filing of a grantable petition pursuant to 37 CFR 1.137(b) was unintentional. The Commissioner may required additional information where there is a question whether the delay was unintentional; and

(4) any terminal disclaimer (and fee as set forth in 37 CFR 1.20(d)) required pursuant to 37 CFR 1.137(c)).

UNITED STATES PATENT AND TRADEMARK OFFICE

Commissioner for Patents
United States Patent and Trademark Office
P.O. Box 1450
Alexandria, VA 22313-1450
www.uspto.gov

ROBERT W.B. BAILEY
BOX 2
STATION L
WINNIPEG MB R3H 0Z4 CA CANADA

COPY MAILED

FEB 15 2008

OFFICE OF PETITIONS

In re Application of
Reginald B. Harder
Application No. 10/788,402
Filed: March 1, 2004
Attorney Docket No: 414-1US

ON PETITION

This is a decision on the petition filed January 25, 2008 under 37 CFR 1.137(b)[1] for revival of the above-identified application.

The petition under 37 CFR 1.137(b) is **GRANTED**.

A Notice to File Missing Parts was mailed May 19, 2004 and set a two month period for reply. A response was filed August 2, 2004, and is of record, however without an extension of time and thus the application became abandoned for failure to file a timely reply. Accordingly, a Notice of Abandonment was mailed August 24, 2007.

The filing of the response to the Notice to File Missing Parts mailed May 19, 2004 is acknowledged. All other requirements having been met , this matter is being referred to the Office of Patent Application Processing for further pre-examination processing.

Telephone inquiries concerning this matter may be directed to the undersigned Petitions Attorney at (571) 272-3212.

Patricia Faison-Ball
Senior Petitions Attorney
Office of Petitions

---

[1]Effective December 1, 1997, the provisions of 37 CFR 1.137(b) now provide that where the delay in reply was unintentional, a petition may be filed to revive an abandoned application or a lapsed patent pursuant to 37 CFR 1.137(b). A grantable petition filed under the provisions of 37 CFR 1.137(b) must be accompanied by:

(1) the required reply, unless previously filed. In a nonprovisional application abandoned for failure to prosecute, the required reply may be met by the filing of a continuing application. In an application or patent, abandoned or lapsed for failure to pay the issue fee or any portion thereof, the required reply must be the payment of the issue fee or any outstanding balance thereof.

(2) the petition fee as set forth in 37 CFR 1.17(m);

(3) a statement that the entire delay in filing the required reply from the due date for the reply until the filing of a grantable petition pursuant to 37 CFR 1.137(b) was unintentional. The Commissioner may required additional information where there is a question whether the delay was unintentional; and

(4) any terminal disclaimer (and fee as set forth in 37 CFR 1.20(d)) required pursuant to 37 CFR 1.137(c)).

UNITED STATES PATENT AND TRADEMARK OFFICE

Commissioner for Patents
United States Patent and Trademark Office
P.O. Box 1450
Alexandria, VA 22313-1450
www.uspto.gov

LUCAS & MERCANTI, LLP
475 PARK AVENUE SOUTH
15TH FLOOR
NEW YORK NY 10016

MAILED

JUN 18 2010

OFFICE OF PETITIONS

In re Application of	:	
Anderson et al.	:	
Application No. 10/788,413	:	ON APPLICATION FOR
Filed: 03/01/2004	:	PATENT TERM ADJUSTMENT
Atty. Docket No. 820.1020	:	

This is in response to the "APPLICATION FOR PATENT TERM ADJUSTMENT UNDER 37 C.F.R. §1.705(b)" filed February 19, 2010. Applicants submit that the correct patent term adjustment to be indicated on the patent is one thousand ninety-five (1095) days, not five hundred forty-five (545) days as calculated by the Office as of the mailing of the initial determination of patent term adjustment. Applicants seek this correction solely on the basis that the Office will take in excess of three years to issue this patent.

As the instant application for patent term adjustment requests reconsideration of the patent term adjustment as it relates to the Office's failure to issue the patent within three years of the filing date, the application for patent term adjustment under 37 CFR 1.705(b) is **DISMISSED as PREMATURE**.

Knowledge of the actual date the patent issues is required to calculate the amount, if any, of additional patent term patentees are entitled to for Office failure to issue the patent within three years. See 37 CFR 1.702(b). (This is true even where a request for continued examination (RCE) was filed). The computer will not undertake the § 1.702(b) calculation until the actual date of issuance of the patent has been determined. Likewise, the computer will not calculate any further Office delay under 37 CFR 1.702(a)(4) or applicant delay under 37 CFR

1.704(c)(10) until the actual date of issuance of the patent has been determined. As such, the Office cannot make a determination on the correctness of the patent term adjustment until the patent has issued.

Requesting reconsideration of the patent term adjustment to be indicated on the patent under 37 CFR 1.705(b) based on the initial determination of patent term adjustment and a projected issuance date of the patent (or even the filing date of the request for continued examination) is premature. Accordingly, it is appropriate to dismiss such a request as premature.

Rather than file an application for patent term adjustment under 37 CFR 1.705(b) contesting the 37 CFR 1.702(b) calculation at the time of the mailing of the notice of allowance, applicants are advised that they may wait until the time of the issuance of the patent and file a request for reconsideration of the patent term adjustment pursuant to 37 CFR 1.705(d). As the USPTO does not calculate the amount of time earned pursuant to 37 CFR 1.702(b) until the time of the issuance of the patent, the Office will consider any request for reconsideration of the patent term adjustment due to an error in the calculation of 37 CFR 1.702(b) to be timely if the request for reconsideration is filed within two months of the issuance of the patent. However, as to all other bases for contesting the initial determination of patent term adjustment received with the notice of allowance, applicants must timely file an application for patent term adjustment prior to the payment of the issue fee.[1]

The Office acknowledges submission of the $200.00 fee set forth in 37 CFR 1.18(e) for consideration of the application for patent term adjustment under 37 CFR 1.705(b).

---

[1] For example, if applicants dispute both the calculation of patent term adjustment under 37 CFR 1.702(a)(1) for Office failure to mail a first Office action or notice of allowance not later than fourteen months after the date on which the application was filed, and under 37 CFR 1.702(b) for Office failure to issue a patent within three years of the actual filing date of the application, then applicants must still timely file an application for patent term adjustment prior to the payment of the issue fee to contest the calculation of Office delay in issuing a first Office action or notice of allowance. See 37 CFR 1.705(b) and 35 U.S.C. 154(b)(3)(B). A dispute as to the calculation of the § 1.702(a)(1) period raised on request for reconsideration of patent term adjustment under 37 CFR 1.705(d) will be dismissed as untimely filed.

Any request for reconsideration of the patent term adjustment indicated on the patent must be timely filed within two months after issuance pursuant to 37 CFR 1.705(d) and must include payment of the required fee under 37 CFR 1.18(e).

The Office of Data Management has been advised of this decision. This application is being referred to the Office of Data Management for issuance of the patent.

Telephone inquiries specific to this decision should be directed to the undersigned at (571) 272-3211.

C. T. Donnell

Christina Tartera Donnell
Senior Petitions Attorney
Office of Petitions

UNITED STATES PATENT AND TRADEMARK OFFICE

COMMISSIONER FOR PATENTS
UNITED STATES PATENT AND TRADEMARK OFFICE
P.O. BOX 1450
ALEXANDRIA, VA 22313-1450
www.uspto.gov

ST. ONGE STEWARD JOHNSTON & REENS, LLC
986 BEDFORD STREET
STAMFORD, CT 06905-5619

COPY MAILED

AUG 0 4 2004

OFFICE OF PETITIONS

In re Application of :
Herbert Huettlin :
Application No. 10/788,428 : NOTICE
Filed: February 27, 2004 :
Attorney Docket No. 03928- P0005A

This is a notice regarding your request for acceptance of a fee deficiency submission under 37 CFR 1.28. On September 1, 1998, the Court of Appeals for the Federal Circuit held that 37 CFR 1.28(c) is the sole provision governing the time for correction of the erroneous payment of the issue fee as a small entity. **See DH Technology v. Synergystex International, Inc. 154 F.3d 1333, 47 USPQ2d 1865 (Fed. Cir. Sept. 1, 1998).**

The Office no longer investigates or rejects original or reissue applications under 37 CFR 1.56. **1098 Off. Gaz. Pat. Office 502 (January 3, 1989)**. Therefore, nothing in this Notice is intended to imply that an investigation was done.

Your fee deficiency submission under 37 CFR 1.28 is hereby **ACCEPTED**.

Inquiries related to this communication should be directed to the Office of Petitions Staff at (703) 305-9285.

This file is being returned to the Office of Initial Patent Examination for further processing using the declaration filed July 19, 2004.

Sherry D. Brinkley
Petitions Examiner
Office of Petitions
Office of the Deputy Commissioner
for Patent Examination Policy

UNITED STATES PATENT AND TRADEMARK OFFICE

Commissioner for Patents
United States Patent and Trademark Office
P.O. Box 1450
Alexandria, VA 22313-1450
www.uspto.gov

BUCHANAN, INGERSOLL & ROONEY PC
POST OFFICE BOX 1404
ALEXANDRIA VA 22313-1404

MAILED

JUN 23 2010

OFFICE OF PETITIONS

In re Application of :
Moberg-Alehammar et al. :
Application No. 10/788,446 : ON APPLICATION FOR
Filed: March 1, 2004 : PATENT TERM ADJUSTMENT
Atty Docket No. 1018798-000224 :

This is in response to the REQUEST FOR RECONSIDERATION OF PATENT TERM ADJUSTMENT PURSUANT TO 37 C.F.R. 1.705(b), filed January 28, 2010. Applicants submit that the correct patent term adjustment to be indicated on the patent is nine hundred (900) days, not three hundred thirty-four (334) days as calculated by the Office as of the mailing of the initial determination of patent term adjustment. Applicants request this correction solely on the basis that the Office will take in excess of three years to issue this patent.

As the instant application for patent term adjustment requests reconsideration of the patent term adjustment as it relates to the Office's failure to issue the patent within 3 years of the filing date, the application for patent term adjustment under 37 CFR 1.705(b) is **DISMISSED as PREMATURE**.

Knowledge of the actual date the patent issues is required to calculate the amount, if any, of additional patent term patentees are entitled to for Office failure to issue the patent within 3 years. See § 1.702(b). This is true even where a request for continued examination (RCE) was filed. The computer will not undertake the § 1.702(b) calculation until the actual date of issuance of the patent has been determined. Likewise, the computer will not calculate any further Office delay under § 1.702(a)(4) or applicant delay under § 1.704(c)(10) until the actual date of issuance of the patent has been determined. As

such, the Office can not make a determination on the correctness of the patent term adjustment until the patent has issued.

Requesting reconsideration of the patent term adjustment to be indicated on the patent under 37 CFR 1.705(b) based on the initial determination of patent term adjustment and a projected issuance date of the patent or even the filing date of the request for continued examination is premature. Accordingly, it is appropriate to dismiss as premature such a request.

Rather than file an application for patent term adjustment under 37 CFR 1.705(b) contesting the 37 CFR 1.702(b) calculation at the time of the mailing of the notice of allowance, applicants are advised that they may wait until the time of the issuance of the patent and file a request for reconsideration of the patent term adjustment pursuant to 37 CFR 1.705(d). As the USPTO does not calculate the amount of time earned pursuant to 37 CFR 1.702(b) until the time of the issuance of the patent, the Office will consider any request for reconsideration of the patent term adjustment due to an error in the calculation of 37 CFR 1.702(b) to be timely if the request for reconsideration is filed within two months of the issuance of the patent. However, as to all other bases for contesting the initial determination of patent term adjustment received with the notice of allowance, applicants must timely file an application for patent term adjustment prior to the payment of the issue fee[1].

The Office acknowledges submission of the $200.00 fee set forth in 37 CFR 1.18(e) for consideration of the application for patent term adjustment under 37 CFR 1.705(b).

Any request for reconsideration of the patent term adjustment indicated on the patent must be timely filed within 2 months

---

[1] For example, if applicant disputes both the calculation of patent term adjustment under 37 CFR 1.702(a)(1) for Office failure to mail a first Office action or notice of allowance not later than fourteen months after the date on which the application was filed and under 37 CFR 1.702(b) for Office failure to issue a patent within three years of the actual filing date of the application, then applicant must still timely file an application for patent term adjustment prior to the payment of the issue fee to contest the calculation of Office delay in issuing a first Office action or notice of allowance. See 37 CFR 1.705(b) and 35 U.S.C. 154(b)(3)(B). A dispute as to the calculation of the §1.702(a)(1) period raised on request for reconsideration of patent term adjustment under 37 CFR 1.705(d) will be dismissed as untimely filed.

after issuance pursuant to 37 CFR 1.705(d) and must include payment of the required fee under 37 CFR 1.18(e).

The Office of Data Management has been advised of this decision. This application is being referred to the Office of Data Management for issuance of the patent.

Telephone inquiries specific to this decision should be directed to the undersigned at (571) 272-3230.

Shirene Willis Brantley

Shirene Willis Brantley
Senior Petitions Attorney
Office of Petitions

UNITED STATES PATENT AND TRADEMARK OFFICE

Commissioner for Patents
United States Patent and Trademark Office
P.O. Box 1450
Alexandria, VA 22313-1450
www.uspto.gov

Mattingly, Stanger & Malur, P.C.
1800 Diagonal Rd., Suite 370
Alexandria, Virginia 22314

MAILED

JUL 05 2005

Technology Center 2100

In re Application of: Nishikawa, et al.
Application No. 10/788,452
Filed: 1 March 2004
For: COMPUTER SYSTEM

DECISION ON PETITION FOR ACCELERATED EXAMINATION UNDER M.P.E.P.§708.02(VIII)

This is a decision on the petition filed 31 May 2005 under 37 C.F.R. 102(d) and M.P.E.P. § 708.02(VIII): Accelerated Examination, to make the above-identified application special.

The Petition is **GRANTED**.

M.P.E.P. § 708.02, Section VIII which sets out the prerequisites for a grantable petition for Accelerated Examination under 37 C.F.R. § 102(d) states in relevant part:

A new application (one which has not received any examination by the examiner) may be granted special status provided that applicant (and this term includes applicant's attorney or agent) complies with each of the following items:

(a) Submits a petition to make special accompanied by the fee set forth in 37 CFR 1.17(h);

(b) Presents all claims directed to a single invention, or if the Office determines that all the claims presented are not obviously directed to a single invention, will make an election without traverse as a prerequisite to the grant of special status;

(c) Submits a statement(s) that a pre-examination search was made, listing the field of search by class and subclass, publication, Chemical Abstracts, foreign patents, etc. The pre-examination search must be directed to the invention as claimed in the application for which special status is requested. A search made by a foreign patent office satisfies this requirement;

(d) Submits one copy each of the references deemed most closely related to the subject matter encompassed by the claims if said references are not already of record; and

(e) Submits a detailed discussion of the references, which discussion points out, with the particularity required by 37 CFR 1.111 (b) and (c), how the claimed subject matter is patentable over the references.

Petition to Make Special **GRANTED** since all of the requirements for special status under MPEP § 708.02(VIII) have been met.

The application file is being forwarded to the Examiner for accelerated examination in accordance with the procedures set forth in M.P.E.P. §708.02, Section VIII. If the application is subsequently allowed, it will be given priority for printing. See M.P.E.P. §1309.

Brian L. Johnson
Special Program Examiner
Technology Center 2100
Computer Architecture, Software and Information Security
571-272-3595

6/30/05

GO

UNITED STATES PATENT AND TRADEMARK OFFICE

Commissioner for Patents
United States Patent and Trademark Office
P.O. Box 1450
Alexandria, VA 22313-1450
www.uspto.gov

MAIL

APR 1 8 2005

DIRECTOR OFFICE
TECHNOLOGY CENTER 2100

MATTINGLY, STANGER, MALUR & BRUNDIDGE, P.C.
1800 DIAGONAL ROAD
SUITE 370
ALEXANDRIA, VA 22314

In re Application of: IKEGAYA, Naoko Application No. 10/788,453 Filed: March 1, 2004 For: METHOD OF MONITORING STATUS INFORMATION OF REMOTE STORAGE AND STORAGE SUBSYSTEM	DECISION ON PETITION TO MAKE SPECIAL (ACCELERATED EXAMINATION) UNDER M.P.E.P. §708.02 (VIII)

This is a response to the petition filed February 16, 2005, under 37 C.F.R. §1.102(d) and M.P.E.P. §708.02 (VIII): Accelerated Examination, to make the above-identified application special.

The Petition is **DISMISSED**.

M.P.E.P. §708.02, Section VIII which sets out the prerequisites for a grantable petition for Accelerated Examination under 37 C.F.R. §1.102(d) states in relevant part:

A new application (one which has not received any examination by the examiner) may be granted special status provided that applicant (and this term includes applicant's attorney or agent) complies with each of the following items:

(a) Submits a petition to make special accompanied by the fee set forth in **37 CFR 1.17(h)**;

(b) Presents all claims directed to a single invention, or if the Office determines that all the claims presented are not obviously directed to a single invention, will make an election without traverse as a prerequisite to the grant of special status;

(c) Submits a statement(s) that a pre-examination search was made, listing the field of search by class and subclass, publication, Chemical Abstracts, foreign patents, etc. The pre-examination search must be directed to the invention as claimed in the application for which special status is requested. A search made by a foreign patent office satisfies this requirement;

(d) Submits one copy each of the references deemed most closely related to the subject matter encompassed by the claims if said references are not already of record; and

(e) Submits a detailed discussion of the references, which discussion points out, with the particularity required by 37 CFR 1.111 (b) and (c), how the claimed subject matter is patentable over the references.

The petition filed February 16, 2004 fails to adequately meet requirement (e) of the criteria set forth above. With respect to requirement (e), a complete detailed discussion of the (aforementioned most closely related) references has not been provided with the necessary specificity required under 37 CFR 1.111 (b) and (c). Specifically, Petitioner should ensure that the above discussion is directed to how the language of **each of the independent claims** are specifically distinguishable and patentable from the references provided in requirement (d) above. It is noted that all independent claims presented in the preliminary amendment filed March 15, 2005 do not include at least one or more claim features as alleged by Petitioner to be distinguishable over the references. For instance, independent claims 13 and 18-23 do not recite at least the asserted limitations of: storage systems that are not directly coupled to the host computer; and an upstream storage subsystem connected to the storage subsystem wherein the status information is received from the down-stream storage subsystem. Independent claim 24 does not include the asserted limitations of storage systems that are not directly coupled to the host computer, and storage systems receiving status information command from the host computer. Independent claim 21, in addition to the aforementioned limitations, does not even recite the feature of remote copy status information of storage systems.

Accordingly, Petition to Make Special is **DISMISSED**.

Petitioner is given one opportunity to perfect the petition. Any request for reconsideration must be filed within TWO MONTHS of the mail date of this decision. Extensions of time under 37 CFR 1.136(a) are permitted by a declaration or statement providing the information as outlined above.

Until the renewed petition is submitted, the application will be returned to the examiner's docket to await treatment on the merits in the normal order of examination.

Brian L. Johnson
Special Program Examiner
Technology Center 2100
Computer Architecture, Software and Information Security
571-272-3595

4/12/05

SDL: 04/07/05

UNITED STATES PATENT AND TRADEMARK OFFICE

COMMISSIONER FOR PATENTS
UNITED STATES PATENT AND TRADEMARK OFFICE
P.O. BOX 1450
ALEXANDRIA, VA 22313-1450
www.uspto.gov

MATTINGLY, STANGER, MALUR &
BRUNDIDGE, P.C.
1800 Diagonal Road
Suite 370
Alexandria, VA 22314

MAILED

SEP 2 8 2005

Technology Center 2100

In re Application of:
Naoko IKEGAYA
Application No. 10/788,453
Filed: March 1, 2004
For: METHOD OF MONITORING STATUS INFORMATION TO MAKE REMOTE STORAGE AND STORAGE SUBSYSTEM

DECISION ON PETITION
TO MAKE SPECIAL

This is a decision on the renewed petition, filed on July 27, 2005 under 37 C.F.R. §102(d) and M.P.E.P. § 708.02(VIII): Accelerated Examination, to make the above-identified application special.

The petition is **GRANTED**.

M.P.E.P. § 708.02, Section VIII which sets out the prerequisites for a grantable petition for Accelerated Examination under 37 C.F.R. § 102(d) states in relevant part:

> A new application (one which has not received any examination by the examiner) may be granted special status provided that applicant (and this term includes applicant's attorney or agent) complies with each of the following items:
>
> (A) Submits a petition to make special accompanied by the fee set forth in 37 CFR 1.17(h);
>
> (B) Presents all claims directed to a single invention, or if the Office determines that all the claims presented are not obviously directed to a single invention, will make an election without traverse as a prerequisite to the grant of special status;
>
> (C) Submits a statement(s) that a pre-examination search was made, listing the field of search by class and subclass, publication, Chemical Abstracts, foreign patents, etc. A search made by a foreign patent office satisfies this requirement;
>
> (D) Submits one copy each of the references deemed most closely related to the subject matter encompassed by the claims if said references are not already of record; and
>
> (E) Submits a detailed discussion of the references, which discussion points out, with the particularity required by 37 CFR 1.111 (b) and (c), how the claimed subject matter is patentable over the references.

> In those instances where the request for this special status does not meet all the prerequisites set forth above, applicant will be notified and the defects in the request will be stated. The application will remain in the status of a new application awaiting action in its regular turn. In those instances where a request is defective in one or more respects, applicant will be given one opportunity to perfect the request in a renewed petition to make special. If perfected, the request will then be granted. If not perfected in the first renewed petition, any additional renewed petitions to make special may or may not be considered at the discretion of the Group Special Program Examiner.

Applicant's submissions of July 27, 2005 and February 16, 2005 meet all the criteria set out above. Accordingly, the petition is **GRANTED**. The application file is being forwarded to the Examiner for accelerated examination in accordance with M.P.E.P. § 708.02. If the application is subsequently allowed, it will be given priority for printing. See M.P.E.P. § 1309.

Vincent N. Trans
Special Program Examiner
Technology Center 2100
Computer Architecture, Software, and
Information Security
571-272-3613

UNITED STATES PATENT AND TRADEMARK OFFICE

UNITED STATES DEPARTMENT OF COMMERCE
United States Patent and Trademark Office
Address: COMMISSIONER FOR PATENTS
P.O. Box 1450
Alexandria, Virginia 22313-1450
www.uspto.gov

RIDOUT & MAYBEE LLP
225 KING STREET WEST
10TH FLOOR
TORONTO, ON M5V 3M2
CANADA

Mail Date: 04/21/2010

Applicant	: Steven Louis Shafer	: DECISION ON REQUEST FOR
Patent Number	: 7648981	: RECALCULATION of PATENT
Issue Date	: 01/19/2010	: TERM ADJUSTMENT IN VIEW
Appliction No	: 10/788,466	: OF WYETH AND NOTICE OF INTENT TO
Filed	: 03/01/2004	: ISSUE CERTIFICATE OF CORRECTION
		:

The Request for Recalculation is **GRANTED** to the extent indicated.

The patent term adjustment has been determined to be **333** days. The USPTO will *sua sponte* issue a certificate of correction reflecting the amount of PTA days determined by the recalculation.

Prior to the issuance of the certificate of correction, the USPTO will afford patentee an opportunity to be heard and request reconsideration. Accordingly, patentee has **one month or thirty (30) days**, whichever is longer, to file a request for reconsideration of this patent term adjustment calculation. See 35 U.S.C. 154(b)(3)(B)(ii) and 37 CFR 1.322(a)(4). No extensions of time will be granted under 37 CFR 1.136.

Patentee should use document code PET.OP if electronically filing a request for reconsideration of this patent term adjustment calculation. The patentee must also include the information required by 37 CFR 1.705(b)(2) and the fee required by 37 CFR 1.18(e). If patentee does not file a timely request for reconsideration of this patent term adjustment calculation including the information required by 37 CFR 1.705(b)(2) and the fee required by 37 CFR 1.18(e), the USPTO will issue a certificate of correction reflecting the PTA determination noted above.

Patentee should be aware that in order to preserve the right to review in the United States District Court for the District of Columbia of the USPTO patent term adjustment determination, patentee must ensure that he or she also take the steps required under 35 U.S.C. 154(b)(4)(A) in a timely manner. Nothing in the request for recalculation should be construed as providing an alternative time frame for commencing a civil action under 35 U.S.C. 154(b)(4)(A).

Any questions concerning this decision should be directed to the Office of Patent Legal Administration at 571-272-7702.

UNITED STATES PATENT AND TRADEMARK OFFICE

UNITED STATES DEPARTMENT OF COMMERCE
United States Patent and Trademark Office
Address: COMMISSIONER FOR PATENTS
P.O. Box 1450
Alexandria, Virginia 22313-1450
www.uspto.gov

WEINGARTEN, SCHURGIN, GAGNEBIN & LEBOVICI LLP
TEN POST OFFICE SQUARE
BOSTON, MA 02109

Mail Date: 04/26/2010

Applicant	: Gordon Rouleau	: DECISION ON REQUEST FOR
Patent Number	: 7643433	: RECALCULATION of PATENT
Issue Date	: 01/05/2010	: TERM ADJUSTMENT IN VIEW
Application No	: 10/788,479	: OF WYETH AND NOTICE OF INTENT TO
Filed	: 03/01/2004	: ISSUE CERTIFICATE OF CORRECTION
		:

The Request for Recalculation is **GRANTED** to the extent indicated.

The patent term adjustment has been determined to be **1326** days. The USPTO will *sua sponte* issue a certificate of correction reflecting the amount of PTA days determined by the recalculation.

Prior to the issuance of the certificate of correction, the USPTO will afford patentee an opportunity to be heard and request reconsideration. Accordingly, patentee has **one month or thirty (30) days**, whichever is longer, to file a request for reconsideration of this patent term adjustment calculation. See 35 U.S.C. 154(b)(3)(B)(ii) and 37 CFR 1.322(a)(4). No extensions of time will be granted under 37 CFR 1.136.

Patentee should use document code PET.OP if electronically filing a request for reconsideration of this patent term adjustment calculation. The patentee must also include the information required by 37 CFR 1.705(b)(2) and the fee required by 37 CFR 1.18(e). If patentee does not file a timely request for reconsideration of this patent term adjustment calculation including the information required by 37 CFR 1.705(b)(2) and the fee required by 37 CFR 1.18(e), the USPTO will issue a certificate of correction reflecting the PTA determination noted above.

Patentee should be aware that in order to preserve the right to review in the United States District Court for the District of Columbia of the USPTO patent term adjustment determination, patentee must ensure that he or she also take the steps required under 35 U.S.C. 154(b)(4)(A) in a timely manner. Nothing in the request for recalculation should be construed as providing an alternative time frame for commencing a civil action under 35 U.S.C. 154(b)(4)(A).

Any questions concerning this decision should be directed to the Office of Patent Legal Administration at 571-272-7702.

UNITED STATES PATENT AND TRADEMARK OFFICE

UNITED STATES DEPARTMENT OF COMMERCE
United States Patent and Trademark Office
Address: COMMISSIONER FOR PATENTS
P.O. Box 1450
Alexandria, Virginia 22313-1450
www.uspto.gov

MICHAEL BEST & FRIEDRICH LLP
100 E WISCONSIN AVENUE
Suite 3300
MILWAUKEE, WI 53202

Mail Date: 04/21/2010

Applicant	: Vittorio Accomazzi	: DECISION ON REQUEST FOR
Patent Number	: 7596267	: RECALCULATION of PATENT
Issue Date	: 09/29/2009	: TERM ADJUSTMENT IN VIEW
Appliction No	: 10/788,481	: OF WYETH AND NOTICE OF INTENT TO
Filed	: 03/01/2004	: ISSUE CERTIFICATE OF CORRECTION
		:

The Request for Recalculation is **GRANTED** to the extent indicated.

The patent term adjustment has been determined to be **1139** days. The USPTO will *sua sponte* issue a certificate of correction reflecting the amount of PTA days determined by the recalculation.

Prior to the issuance of the certificate of correction, the USPTO will afford patentee an opportunity to be heard and request reconsideration. Accordingly, patentee has **one month or thirty (30) days**, whichever is longer, to file a request for reconsideration of this patent term adjustment calculation. See 35 U.S.C. 154(b)(3)(B)(ii) and 37 CFR 1.322(a)(4). No extensions of time will be granted under 37 CFR 1.136.

Patentee should use document code PET.OP if electronically filing a request for reconsideration of this patent term adjustment calculation. The patentee must also include the information required by 37 CFR 1.705(b)(2) and the fee required by 37 CFR 1.18(e). If patentee does not file a timely request for reconsideration of this patent term adjustment calculation including the information required by 37 CFR 1.705(b)(2) and the fee required by 37 CFR 1.18(e), the USPTO will issue a certificate of correction reflecting the PTA determination noted above.

Patentee should be aware that in order to preserve the right to review in the United States District Court for the District of Columbia of the USPTO patent term adjustment determination, patentee must ensure that he or she also take the steps required under 35 U.S.C. 154(b)(4)(A) in a timely manner. Nothing in the request for recalculation should be construed as providing an alternative time frame for commencing a civil action under 35 U.S.C. 154(b)(4)(A).

Any questions concerning this decision should be directed to the Office of Patent Legal Administration at 571-272-7702.

UNITED STATES PATENT AND TRADEMARK OFFICE

UNITED STATES DEPARTMENT OF COMMERCE
United States Patent and Trademark Office
Address: COMMISSIONER FOR PATENTS
P.O. Box 1450
Alexandria, Virginia 22313-1450
www.uspto.gov

MICHAEL BEST & FRIEDRICH LLP
100 E WISCONSIN AVENUE
Suite 3300
MILWAUKEE, WI 53202

Mail Date: 05/18/2010

Applicant : Vittorio Accomazzi
Patent Number : 7596267
Issue Date : 09/29/2009
Application No: 10/788,481
Filed : 03/01/2004

: NOTICE CONCERNING IMPROPER
: CALCULATION OF PATENT TERM
: ADJUSTMENT BASED UPON USPTO
: IMPROPERLY MEASURING REDUCTION
: PERIOD UNDER 37 CFR 1.704(c)(10).

The United States Patent and Trademark Office (USPTO) discovered that in processing the recent recalculation decisions mailed in response to patentee's filed Request for Recalculation of Patent Term Adjustment in view of Wyeth, the USPTO improperly measured the reduction period for reductions under 37 CFR 1.704(c)(10). Pursuant to 37 CFR 1.704(c)(10), patentee's reduction begins on the date of filing the amendment under 37 CFR 1.312 ("1.312 amendment") or other related paper and ends on the date that the Office mails a response to the filing of the 1.312 amendment or other paper. It has been discovered that during the recalculation, the calculation failed to the limit the reduction to the mail date of the response to the 1.312 amendment or other paper. Accordingly, patentee's reductions were greater than warranted.

This notice **VACATES** the previous GRANTED request for recalculation and provides patentee with a revised GRANTED recalculation.

The patent term adjustment has been determined to be **1174** days. The USPTO will *sua sponte* issue a certificate of correction reflecting the amount of patent term adjustment (PTA) days determined by the recalculation.

Prior to the issuance of the certificate of correction, the USPTO will afford patentee an opportunity to be heard and request reconsideration. Accordingly, patentee has **one month or thirty (30) days** from the mail date of this notice, whichever is longer, to file a request for reconsideration of this PTA calculation. See 35 U.S.C. § 154(b)(3)(B)(ii) and 37 CFR 1.322(a)(4).

Patentee should use document code PET.OP if electronically filing a request for reconsideration of this PTA calculation. The patentee must also include the information required by 37 CFR 1.705(b)(2), and the fee required by 37 CFR 1.18(e). If patentee does not file a timely request for reconsideration of this PTA calculation, including the information required by 37 CFR 1.705(b)(2) and the fee required by 37 CFR 1.18(e), the USPTO will issue a certificate of correction reflecting the PTA determination noted above.

Patentee should be aware that in order to preserve the right of review of the USPTO's PTA determination in the United States District Court for the District of Columbia, patentee must ensure that the steps required under 35 U.S.C. § 154 (b)(4) are taken in a timely manner. Nothing in the request for recalculation should be construed as providing an alternative time frame for commencing a civil action under 35 U.S.C. § 154(b)(4).

UNITED STATES PATENT AND TRADEMARK OFFICE

UNITED STATES DEPARTMENT OF COMMERCE
United States Patent and Trademark Office
Address: COMMISSIONER FOR PATENTS
P.O. Box 1450
Alexandria, Virginia 22313-1450
www.uspto.gov

APPLICATION NO.	FILING DATE	FIRST NAMED INVENTOR	ATTORNEY DOCKET NO.	CONFIRMATION NO.
10/788,489	03/01/2004	Serge Carillo	ST94037B	9027

29693 7590 02/11/2009

WILEY REIN LLP
1776 K. STREET N.W.
WASHINGTON, DC 20006

EXAMINER	
LONG, SCOTT	

ART UNIT	PAPER NUMBER
1633	

MAIL DATE	DELIVERY MODE
02/11/2009	PAPER

Please find below and/or attached an Office communication concerning this application or proceeding.

The time period for reply, if any, is set in the attached communication.

UNITED STATES PATENT AND TRADEMARK OFFICE

Commissioner for Patents
United States Patent and Trademark Office
P.O. Box 1450
Alexandria, VA 22313-1450
www.uspto.gov

FEB 1 1 2009

WILEY REIN LLP
1776 K. STREET N.W.
WASHINGTON DC 20006

In re Application of:
Carillo et al.
Serial No.: 10/788,489
Filed: March 1,2004
Attorney Docket No.: **ST94037B**

: PETITION DECISION

This is in response to the petition under 37 CFR § 1.181, filed January 26, 2009, requesting that either the finality of the Office action of April 30, 2008 be withdrawn or that applicants' amendment filed under 37 CFR 1.116 after final Office action on October 30, 2008 be entered, thus overturning the examiner's decision to not enter said amendments as communicated in the Advisory Action mailed November 26, 2008.

BACKGROUND

The examiner mailed a non-final Office action on August 17, 2007 setting a three month statutory limit for reply. At the time of this non-final Office action, claims 1-8 were pending and examined on their merits. *Inter alia*, the examiner rejected claims 2 and 5-7 under 35 U.S.C. § 112, second paragraph, for reciting indefinite matter, rejected claims 5 and 7 under 35 U.S.C. § 112, first paragraph, for lacking written description, rejected claims 1-2 and 8 under 35 U.S.C. 102(b) as being anticipated by Rambsy et al. (1994) and rejected claims 1-8 under 35 U.S.C. 103(a) as being unpatentable over Rambsy et al. (1994) in view of Asada et al. (1989).

In response to the non-final Office action of August 17, 2007, applicants filed a response on February 19, 2008. Said response included an amendment to claims 1, 2 and 5.

The examiner mailed a final Office action on April 30, 2008 setting a three month statutory limit for reply. At the time of this final Office action, claims 1-8 remained pending in the application and were examined on their merits. *Inter alia*, the examiner withdrew the rejection made previously over claims 2 and 5-7 under 35 U.S.C. § 112, second paragraph, for reciting indefinite matter, withdrew the rejections made over claims 5 and 7 under 35 U.S.C. § 112, first paragraph, for lacking written description, withdrew the rejection of claims 1-2 and 8 under 35 U.S.C.

102(b) as being anticipated by Rambsy et al. (1994) and removed the rejection of claims 1-8 under 35 U.S.C. 103(a) as being unpatentable over Rambsy et al. (1994) in view of Asada et al. (1989). The examiner instituted a new rejection of claims 1-8 under U.S.C. 103(a) as being unpatentable over Henkart et al. (US-5,607,831) in view of Squier et al. (Journal of Cellular Physiology, May 1994; 159(2): 229-237) and further in view of Maki et al. (The Journal of Biological Chemistry, Nov.15, 1989; 264(32): 18866-18869) and further in view of Haake et al. (J Invest Dermatol, 1993; 101 : 107-112).

Applicants filed a Notice of Appeal on October 30, 2008.

In response to the final Office action issued April 30, 2008, applicants submitted a response under 37 CFR 1.116 after final Office action which included remarks, arguments and a proposed amendment to claim 1. Applicants' proposed amendment reads as follows:

> 1. (Currently amended) A method for detecting an inhibitor of p53 protein degradation comprising providing a cell extract containing one or more p53 proteins and one or more proteases, administering a peptide or protein inhibitor of calpain protease activity to the cell extract, and measuring p53 protein and p53 protein fragments.

On November 26, 2008, the examiner mailed an Advisory Action. In this Advisory Action, the examiner indicated that applicants' proposed claim amendments submitted on April 30, 2008 under 37 CFR 1.116 after final Office action would not be entered because they raised the issue of further consideration and/or search. The examiner specifically indicated:

> The applicant has argued (Remarks, page 5 bridging page 6, filed 10/30/2008) that the examiner's claim interpretation is "nonsensical." The applicant further states, "applicant's have amended claim 1 to fully clarify that the peptide or protein inhibitor of calpain protease activity is administered to the cell extract." (Remarks, page 6, lines 19-21). Since the disputed claim interpretation has been amended to further limit the claims, the examiner believes this would require further search and consideration. Accordingly, the proposed amendments will not be entered.

In response thereto, applicants filed this petition under 37 CFR § 1.181 on January 26, 2009, requesting that either the finality of the Office action of April 30, 2008 be withdrawn or that applicants' amendment filed under 37 CFR 1.116 after final Office action on October 30, 2008 be entered, thus overturning the examiner's decision to not enter said amendments as communicated in the Advisory Action mailed November 26, 2008.

It is noted that applicants' Petition to remove the finality of the final Office action of April 30, 2008 is untimely as applicants are provided 2 months to Petition from the date of mailing of the petitionable Office action (37 CFR § 1.181(f)). Nonetheless, a decision on the finality of the April 30, 2008 final Office action has been rendered herein.

DISCUSSION

In the petition filed on January 26, 2009, applicants first argue that rendering final the Office action mailed April 30, 2008 was improper due to the examiner's new rejection therein of

claims 1-8 under U.S.C. 103(a) as being unpatentable over Henkart et al. (US-5,607,831) in view of Squier et al. (Journal of Cellular Physiology, May 1994; 159(2): 229-237) and further in view of Maki et al. (The Journal of Biological Chemistry, Nov.15, 1989; 264(32): 18866-18869) and further in view of Haake et al. (J Invest Dermatol, 1993; 101 : 107-112).

Applicants specifically argue that the new ground of rejection instituted by the examiner in the final Office action was not necessitated by applicants' amendment to the claims:

> All of these alleged "limitations" were present in the original, unamended claims. More specifically, claim 2 has always disclosed that the inhibitor is a calpastatin, meaning that the Henkart, Squier, and Maki references could have been cited in the initial Office Action. Additionally, independent claim 1 has always disclosed "providing a cell extract containing one or more p53 proteins," meaning that Haake and Ramsby could have been cited in the initial Office Action.

Applicants' argument that the 35 USC § 103 rejection rendered in the final Office action is a *new* rejection is persuasive since the 35 USC § 103 rejection was not previously set forth on the record by the examiner. It is noted that new rejections in a final Office action are permitted under certain circumstances. Specifically, finality of Office actions on a second action is governed by MPEP § 706.07(a):

> Under present practice, second or any subsequent actions on the merits shall be final, *except where the examiner introduces a new ground of rejection that is neither necessitated by applicant's amendment of the claims, nor based on information submitted in an information disclosure statement filed during the period set forth in 37 CFR 1.97(c)* with the fee set forth in 37 CFR 1.17(p). Where information is submitted in an information disclosure statement during the period set forth in 37 CFR 1.97(c) with a fee, the examiner may use the information submitted, e.g., a printed publication or evidence of public use, and make the next Office action final whether or not the claims have been amended, provided that no other new ground of rejection which was not necessitated by amendment to the claims is introduced by the examiner. (emphasis added)

Therefore, the MPEP establishes that new rejections may be made in final Office actions so long as the new rejections are necessitated by applicants' amendment(s) to the claims, or based upon information submitted in an information disclosure statement. Additionally, MPEP § 706.07(a) states: "Furthermore, a second or any subsequent action on the merits in any application or patent undergoing reexamination proceedings *will not be made final if it includes a rejection*, on newly cited art, other than information submitted in an information statement filed under 37 CFR 1.97(c)...*of any claim not amended by applicant or patent owner in spite of the fact that other claims may have been amended to require newly cited art*." (emphasis added)

An analysis of the nature of the claim amendments made by applicants prior to the final Office action is in order: the complete set of claims, as they were amended by applicants on February 19, 2008 are set forth *infra*:

> 1. (Currently Amended) A method for detecting an inhibitor of p53 protein degradation comprising providing a cell extract containing one or more p53 proteins and one or more proteases, administering an a peptide or protein inhibitor of calpain protease activity, and measuring p53 protein and p53 protein fragments.

2. (Currently Amended) The method of claim 1, wherein the inhibitor administered is a calpastatin.

3. (Original) The method of claim 2, wherein the calpastatin is encoded by one of SEQ ID NO: 1-3.

4. (Original) The method of claim 1, wherein the cell extract is derived from a tumor cell.

5. (Original) The method of claim 1, wherein the inhibitor administered is a fragment of calpastatin.

6. (Original) The method of claim 4, wherein the inhibitor is a calpastatin.

7. (Original) The method of claim 4, wherein the inhibitor is a fragment of calpastatin.

8. (Original) The method of claim 1, wherein measuring the p53 protein and p53 protein fragments is performed using gel electrophoresis.

It is evident that applicants' amendment to claim 1 limited the 'inhibitor' to more narrowly recite 'a peptide or protein.' Applicants' amendment to claim 2 which inserted 'administered' prior to 'is a calpastatin' which resulted in the limitation '...wherein the inhibitor administered is a calpastatin' is not deemed to limit nor broaden the scope of claim 2 because claim 1 states 'administering an inhibitor of calpain protease activity.' Because claim 2 is dependent upon claim 1, the only necessary conclusion which can be made is that 'the inhibitor' of claim 2 is 'the inhibitor' of claim 1 which is 'administered.' The amendment to claim 5 whereby applicants inserted 'administered' following 'inhibitor' also is not deemed to limit claim 5 any more than it originally stated. Thus, the amendments made to claims 2 and 5 were merely claim amendments to the matter of form and not substance.

It is further evident from said amendment, that prior to said amendment and therefore at the time the non-final Office action was mailed; claims 2-3 limited claim 1 to wherein the inhibitor was calpastatin and further limited claim 1 to wherein the calpastatin was encoded by one of SEQ ID NO: 1-3,' respectively, claim 5 limited claim 1 to wherein the inhibitor was a fragment of calpastatin, claim 6 limited claim 4 to wherein the inhibitor was calpastatin, and claim 7 limited claim 4 to wherein the inhibitor was a fragment of calpastatin. Therefore, all of claims 2-3, 5, 6 and 7 were already respectively limited to wherein the inhibitor was a protein or peptide and applicants' amendment to claims 1, 2 and 5 of February 19, 2008 did not change the scope of any of claims 2, 3, 5, 6 or 7.

Thus, it can be said that the only claims which were actually narrowed by applicant in said amendment submitted after final Office action were claims 1, 4 and 8. Subsequently, *any new rejection instituted over any claims other than claims 1, 4 and 8 in the final Office action could not have been necessitated by applicants' amendments to the claims.* On this account, it is clear that the rejection of claims 2, 3, 5, 6 and 7 under U.S.C. 103(a) as being unpatentable over Henkart et al. (US-5,607,831) in view of Squier et al. (Journal of Cellular Physiology, May 1994; 159(2): 229-237) and further in view of Maki et al. (The Journal of Biological Chemistry, Nov.15, 1989; 264(32): 18866-18869) and further in view of Haake et al. (J Invest Dermatol, 1993; 101 : 107-112) was indeed a new rejection instituted by the examiner in the final Office action which was not necessitated by applicants' amendment to these claims, nor necessitated by

the filing of an IDS in the interim between the mailing of the non-final Office action and the final Office action.

Hence, applicants' arguments are well-taken that the finality of the Office action issued April 30, 2008 was premature and thus improper. The finality of said Office action is herein REMOVED.

Applicants' second argument contends that the examiner erred in refusing to enter the amendment filed under 37 CFR 1.116 after final Office action on October 30, 2008. Applicants assert that the amendment merely placed claim 1 in better condition for appeal and consequently, should be entered. To reiterate, applicants' proposed amendment read as follows:

> 1. (Currently amended) A method for detecting an inhibitor of p53 protein degradation comprising providing a cell extract containing one or more p53 proteins and one or more proteases, administering a peptide or protein inhibitor of calpain protease activity to the cell extract, and measuring p53 protein and p53 protein fragments.

Prosecution after final rejection is governed by 37 C.F.R.§ 1.116 which states, in part:

> (b) After a final rejection or other final action (§ 1.113) in an application or in an ex parte reexamination filed under § 1.510, or an action closing prosecution (§ 1.949) in an inter partes reexamination filed under § 1.913, but before or on the same date of filing an appeal (§ 41.31 or § 41.61 of this title):
> (1) An amendment may be made canceling claims or complying with any requirement of form expressly set forth in a previous Office action;
> (2) An amendment presenting rejected claims in better form for consideration on appeal may be admitted; or
> (3) An amendment touching the merits of the application or patent under reexamination may be admitted upon a showing of good and sufficient reasons why the amendment is necessary and was not earlier presented.

The examiner indicated on the Advisory Action form PTOL-303 that the proposed amendments filed after final rejection would not be entered because they raised new issues that would have required further consideration and/or search. The examiner, on the addendum page of the Advisory Action form clearly indicated:

> The applicant has argued (Remarks, page 5 bridging page 6, filed 10/30/2008) that the examiner's claim interpretation is "nonsensical." The applicant further states, "applicant's have amended claim 1 to fully clarify that the peptide or protein inhibitor of calpain protease activity is administered to the cell extract." (Remarks, page 6, lines 19-21). Since the disputed claim interpretation has been **amended to further limit** the claims, the examiner believes this **would require further search and consideration**. Accordingly, the proposed amendments will not be entered. (emphasis added)

Hence, the examiner properly reasoned that applicants' amendment to claim 1 which inserted 'to the cell extract' would require a new search and consideration due to the fact that 'to the cell extract' served to limit the claimed invention. Furthermore, while applicants argue that the limitation 'to the cell extract' merely places the claim in better form for appeal; this argument is not accepted. MPEP § 714.13 II and III offer further insight as to whether a claim amendment filed after final Office action places the claim(s) in better condition for allowance.

MPEP § 714.13 II indicates:

> Except where an amendment merely cancels claims, adopts examiner suggestions, removes issues for appeal, or in some other way requires only a cursory review by the examiner, compliance with the requirement of a showing under 73 CFR 1.116(b)(3) is expected in all amendments after final rejection.

MPEP § 714.13 III (A) indicates, in part:

> (A) The claims, if amended as proposed, would not avoid any of the rejections set forth in the last Office action, and thus the amendment would not place the case in condition for allowance or in better condition for appeal.

'[R]emoves issues for appeal' as stated by MPEP § 714.13 II means 'issues of record.' There was no 'issue' on record regarding the breadth of the claim(s) prior to the proposed amendment filed by applicants after final Office action which proposed to insert the limitation 'to the cell extract.' It is therefore decided that the proposed added limitation 'to the cell extract' does not 'avoid any of the rejections set forth in the last Office action' because the proposed insertion of 'to the cell extract' was not suggested by the examiner and consideration of such an amendment would require more than a cursory review by the examiner in order to ascertain whether or not the limitation would serve to overcome the outstanding rejections to the claimed invention.

Hence, no impropriety can be found on the part of the examiner for refusing to admit applicants' proposed amendments filed under 37 CFR 1.116 after final Office action on October 30, 2008.

However, notwithstanding the decision that the examiner's refusal to enter the after final amendment was indeed proper, applicants' request to enter the claim amendment is granted based upon the conclusion rendered herein; that the finality of the Office action instituted by the examiner on April 30, 2008 was improper and is herein removed. Due to removal of finality, the amendment filed on October 30, 2008 will be entered and treated as an amendment filed under 37 CFR § 1.111; or in other words, treated as an amendment filed prior to a final Office action.

Accordingly, upon careful review of the prosecution history of this case, applicants' arguments are found persuasive. Consequently, the finality of the Office action mailed April 30, 2008 is hereby REMOVED. The amendment submitted by applicants after final Office action on October 30, 2008 is hereby ENTERED, whereby said amendment will be treated as an amendment filed under 37 CFR § 1.111 and acted on accordingly by the examiner.

DECISION

The petition is **GRANTED.**

This case will be forwarded to the examiner to take action not inconsistent with this decision.

Should there be any questions about this decision please contact Marianne C. Seidel, by letter addressed to Director, TC 1600, at the address listed above, or by telephone at 571-272-0584 or by facsimile sent to the general Office facsimile number, 703-872-9306.

Andrew Wang
Acting Director, Technology Center 1600

UNITED STATES PATENT AND TRADEMARK OFFICE

Commissioner for Patents
United States Patent and Trademark Office
P.O. Box 1450
Alexandria, VA 22313-1450
www.uspto.gov

WILMERHALE/BOSTON
60 STATE STREET
BOSTON MA 02109

COPY MAILED

FEB 08 2010

In re Application of	:	
LING, XINSHENG SEAN	:	
Application No. 10/788,539	:	ON APPLICATION FOR
Filed: February 27, 2004	:	PATENT TERM ADJUSTMENT
Atty. Docket No. 0012136.00131US1	:	

This is in response to the APPLICATION FOR PATENT TERM ADJUSTMENT AND REQUEST FOR RECONSIDERATION OF THE PATENT TERM ADJUSTMENT UNDER 37 C.F.R. §§ 1.702-1.705 filed December 10, 2009. Applicants submit that the correct patent term adjustment to be indicated on the patent should be a minimum of one thousand five hundred thirty-four (1,534) days, not seven hundred eighty-seven (787) days as calculated by the Office as of the mailing of the initial determination of patent term adjustment. Applicants seek this correction solely on the basis that the Office will take in excess of three years to issue this patent.

As the instant application for patent term adjustment requests reconsideration of the patent term adjustment as it relates to the Office's failure to issue the patent within three years of the filing date, the application for patent term adjustment under 37 CFR 1.705(b) is **DISMISSED as PREMATURE**.

Knowledge of the actual date the patent issues is required to calculate the amount, if any, of additional patent term patentees are entitled to for Office failure to issue the patent within three years. See 37 CFR 1.702(b). (This is true even where a request for continued examination (RCE) was filed). The computer will not undertake the § 1.702(b) calculation until the actual date of issuance of the patent has been determined.

Likewise, the computer will not calculate any further Office delay under 37 CFR 1.702(a)(4) or applicant delay under 37 CFR 1.704(c)(10) until the actual date of issuance of the patent has been determined. As such, the Office cannot make a determination on the correctness of the patent term adjustment until the patent has issued.

Requesting reconsideration of the patent term adjustment to be indicated on the patent under 37 CFR 1.705(b) based on the initial determination of patent term adjustment and a projected issuance date of the patent (or even the filing date of the request for continued examination) is premature. Accordingly, it is appropriate to dismiss such a request as premature.

Rather than file an application for patent term adjustment under 37 CFR 1.705(b) contesting the 37 CFR 1.702(b) calculation at the time of the mailing of the notice of allowance, applicants are advised that they may wait until the time of the issuance of the patent and file a request for reconsideration of the patent term adjustment pursuant to 37 CFR 1.705(d). As the USPTO does not calculate the amount of time earned pursuant to 37 CFR 1.702(b) until the time of the issuance of the patent, the Office will consider any request for reconsideration of the patent term adjustment due to an error in the calculation of 37 CFR 1.702(b) to be timely if the request for reconsideration is filed within two months of the issuance of the patent. However, as to all other bases for contesting the initial determination of patent term adjustment received with the notice of allowance, applicants must timely file an application for patent term adjustment prior to the payment of the issue fee.[1]

---

[1] For example, if applicants dispute both the calculation of patent term adjustment under 37 CFR 1.702(a)(1) for Office failure to mail a first Office action or notice of allowance not later than fourteen months after the date on which the application was filed, and under 37 CFR 1.702(b) for Office failure to issue a patent within three years of the actual filing date of the application, then applicants must still timely file an application for patent term adjustment prior to the payment of the issue fee to contest the calculation of Office delay in issuing a first Office action or notice of allowance. See 37 CFR 1.705(b) and 35 U.S.C. 154(b)(3)(B). A dispute as to the calculation of the § 1.702(a)(1) period raised on request for reconsideration of patent term adjustment under 37 CFR 1.705(d) will be dismissed as untimely filed.

The Office acknowledges submission of the $200.00 fee set forth in 37 CFR 1.18(e) for consideration of the application for patent term adjustment under 37 CFR 1.705(b).

Any request for reconsideration of the patent term adjustment indicated on the patent must be timely filed within two months after issuance pursuant to 37 CFR 1.705(d) and must include payment of the required fee under 37 CFR 1.18(e).

The Office of Data Management has been advised of this decision. This application is being referred to the Office of Data Management for issuance of the patent.

Telephone inquiries specific to this decision should be directed to the undersigned at (571) 272-3211.

Christina Tartera Donnell

Christina Tartera Donnell
Senior Petitions Attorney
Office of Petitions

UNITED STATES PATENT AND TRADEMARK OFFICE

Commissioner for Patents
United States Patent and Trademark Office
P.O. Box 1450
Alexandria, VA 22313-1450
www.uspto.gov
DIW Feb-08

JOSEPH J. LAKS
THOMSON LICENSING LLC
2 INDEPENDENCE WAY, PATENT OPERATIONS
PO BOX 5312
PRINCETON NJ 08543

COPY MAILED

FEB 20 2008

OFFICE OF PETITIONS

In re Application of	:	
Allibhoy et al.	:	
Application Number: 10/788559	:	DECISION ON PETITION
Filing Date: 02/26/2004	:	
Attorney Docket Number:	:	
PU050096	:	

This is a decision on the petition under 37 CFR 1.137(b),[1] filed on September 19, 2007, to revive the above-identified application.

The petition is **DISMISSED**.

Any request for reconsideration of this decision must be submitted within TWO (2) MONTHS from the mail date of this

---

[1] Effective December 1, 1997, the provisions of 37 CFR 1.137(b) now provide that where the delay in reply was unintentional, a petition may be filed to revive an abandoned application or a lapsed patent pursuant to 37 CFR 1.137(b). A grantable petition filed under the provisions of 37 CFR 1.137(b) must be accompanied by:

(1) the required reply, unless previously filed. In a nonprovisional application abandoned for failure to prosecute, the required reply may be met by the filing of a continuing application. In a nonprovisional application filed on or after June 8, 1995, and abandoned for failure to prosecute, the required reply may also be met by the filing of a request for continued examination in compliance with § 1.114. In an application or patent, abandoned or lapsed for failure to pay the issue fee or any portion thereof, the required reply must be the payment of the issue fee or any outstanding balance thereof. In an application abandoned for failure to pay the publication fee, the required reply must include payment of the publication fee.

(2) the petition fee as set forth in 37 CFR 1.17(m);

(3) a statement that the entire delay in filing the required reply from the due date for the reply until the filing of a grantable petition pursuant to 37 CFR 1.137(b) was unintentional. The Commissioner may required additional information where there is a question whether the delay was unintentional; and

(4) any terminal disclaimer (and fee as set forth in 37 CFR 1.20(d)) required pursuant to 37 CFR 1.137(c)).

decision. Extensions of time under 37 CFR 1.136(a) are permitted. The reconsideration request should include a cover letter entitled "Renewed Petition Under 37 CFR 1.137(b)." This is not a final agency decision.

This application became abandoned on September 29, 2006, for failure to timely file a proper reply to the final Office action mailed on June 28, 2006, which set a three (3) month shortened statutory period for reply. No extensions of time under 37 CFR 1.136(a) were obtained. Notice of Abandonment was mailed on July 13, 2007.

The petition lacks the required reply. The only proper reply to a final Office action is a Notice of Appeal and fee, Request for Continuing Examination and submission under 37 CFR 1.114, a continuing application, or an amendment placing the application in *prima facie* condition for allowance. The examiner has determined that the amendment filed on September 19, 2007, does not place the case in *prima facie* condition for allowance.

Petitioner should file a proper reply with any renewed petition.

A copy of the examiner's Advisory Action is enclosed for petitioner's reference.

Further correspondence with respect to this matter should be addressed as follows:

By mail: Mail Stop Petition
Commissioner for Patents
P.O. Box 1450
Alexandria, VA 22313-1450

By FAX: (571) 273-8300
Attn: Office of Petitions

By hand: Customer Service Window
Mail Stop Petition
Randolph Building
401 Dulany Street
Alexandria, VA 22314

Telephone inquiries concerning this matter may be directed to the undersigned at (571) 272-3231.

DIWood

Douglas I. Wood
Senior Petitions Attorney
Office of Petitions

Encl: Advisory Action Before the Filing of an Appeal Brief

UNITED STATES PATENT AND TRADEMARK OFFICE

Commissioner for Patents
United States Patent and Trademark Office
P.O. Box 1450
Alexandria, VA 22313-1450
www.uspto.gov
DIW Apr-08

JOSEPH J. LAKS
THOMSON LICENSING LLC
2 INDEPENDENCE WAY, PATENT OPERATIONS
PO BOX 5312
PRINCETON NJ 08543

COPY MAILED

APR 14 2008

OFFICE OF PETITIONS

In re Application of	:	
Allibhoy et al.	:	
Application Number: 10/788559	:	DECISION ON PETITION
Filing Date: 02/26/2004	:	
Attorney Docket Number:	:	
PU050096	:	

This is a decision on the renewed petition under 37 CFR 1.137(b),[1] filed on March 19, 2008, to revive the above-identified application.

The petition is **GRANTED**.

This application became abandoned on September 29, 2006, for failure to timely file a proper reply to the final Office action

---

[1] Effective December 1, 1997, the provisions of 37 CFR 1.137(b) now provide that where the delay in reply was unintentional, a petition may be filed to revive an abandoned application or a lapsed patent pursuant to 37 CFR 1.137(b). A grantable petition filed under the provisions of 37 CFR 1.137(b) must be accompanied by:

(1) the required reply, unless previously filed. In a nonprovisional application abandoned for failure to prosecute, the required reply may be met by the filing of a continuing application. In a nonprovisional application filed on or after June 8, 1995, and abandoned for failure to prosecute, the required reply may also be met by the filing of a request for continued examination in compliance with § 1.114. In an application or patent, abandoned or lapsed for failure to pay the issue fee or any portion thereof, the required reply must be the payment of the issue fee or any outstanding balance thereof. In an application abandoned for failure to pay the publication fee, the required reply must include payment of the publication fee.

(2) the petition fee as set forth in 37 CFR 1.17(m);

(3) a statement that the entire delay in filing the required reply from the due date for the reply until the filing of a grantable petition pursuant to 37 CFR 1.137(b) was unintentional. The Director may required additional information where there is a question whether the delay was unintentional; and

(4) any terminal disclaimer (and fee as set forth in 37 CFR 1.20(d)) required pursuant to 37 CFR 1.137(c)).

mailed on June 28, 2006, which set a three (3) month shortened statutory period for reply. No extensions of time under 37 CFR 1.136(a) were obtained. Notice of Abandonment was mailed on July 13, 2007. The petition filed on September 19, 2007, was dismissed because the amendment after final filed with the petition failed to place the application in condition for allowance.

The present petition is accompanied by a Request for Continued Examination (RCE) and the required fee. Petitioner requests the previous amendment after final be treated as the submission required under 37 CFR 1.114.

The application is referred to Technology Center Art Unit 2157 for further processing.

Telephone inquiries concerning this matter may be directed to the undersigned at (571) 272-3231.

D Wood

Douglas I. Wood
Senior Petitions Attorney
Office of Petitions

UNITED STATES PATENT AND TRADEMARK OFFICE

COMMISSIONER FOR PATENTS
UNITED STATES PATENT AND TRADEMARK OFFICE
P.O. Box 1450
ALEXANDRIA, VA 22313-1450
www.uspto.gov

MAILED

MAY 08 2009

TECHNOLOGY CENTER 2100

Joel M. Fogelson
Thomson Licensing LLC
P.O. Box 5312
Two Independence Way
PRINCETON NJ 08543-5312

In re Application of: ALLIBHOY, N. et. al..
Application No. **10/788,559**
Filed: February 26, 2004
Attorney Docket No.: PU050096
Title of Invention: METHOD AND SYSTEM FOR CONTROLLING AND AUDITING CONTENT /SERVICES SYSTEMS

DECISION ON PETITION UNDER 37 CFR § 1.181

This is a decision on the petition, filed January 14, 2009, under 37 C.F.R. § 1.181(a) to invoke Supervisory Authority of the Commissioner and require the Examiner to withdraw the Final rejection mailed July 22, 2008. Petitioner also seeks response to the arguments enclosed with this petition and indication of the status of claim 16.

This petition is hereby **GRANTED**.

RELEVANT HISTORY

06/28/06 Final office action mailed 6/28/06 in response to filing of application.

07/13/07 Notice of abandonment for failure to reply of action mailed 06/28/06.

09/19/07 After-final amendment in response to action mailed 06/28/06, the response including amendment to the specification, remarks/arguments and replacement drawings. Additionally, a Petition to revive is filed including an RCE is filed. The RCE request previously submitted amendment filed be considered as submission.

02/20/08 Advisory Action in response to petition to revive and RCE was mailed.

07/22/08 Final action in response to petition to revive and RCE is mailed after petition was granted on 4/14/08..

01/14/09 Amendment after-final including amendment to the specification and

remarks/arguments is filed. Additionally, a Petition for review by the Technology Center SPRE is filed.

RULES AND REGULATIONS

MPEP §706.07 Final Rejection: 37 CFR §1.113 Final rejection or action.

(b) In making such final rejection, the examiner shall repeat or state all grounds of rejection then considered applicable to the claims in the application, *clearly stating the reasons in support thereof.* (c) Reply to a final rejection or action must include cancellation of, or appeal from the rejection of, each rejected claim. If any claim stands allowed, *the reply to a final rejection or action must comply with any requirements or objections as to form.*

STATEMENT OF GROUNDS

In making the final rejection, all outstanding grounds of rejection of record should be carefully reviewed, and any such grounds relied on in the final rejection should be reiterated. They must also be clearly developed to such an extent that applicant may readily judge the advisability of an appeal unless a single previous Office action contains a complete statement supporting the rejection. However, where a single previous Office action contains a complete statement of a ground of rejection, *the final rejection may refer to such a statement and also should include a rebuttal of any arguments raised in the applicant's reply.* If appeal is taken in such a case, the examiner's answer should contain a complete statement of the examiner's position.

MPEP §706.07(b) Final Rejection, When Proper on First Action

The claims of a new application may be finally rejected in the first Office action in those situations where *(A) the new application is a continuing application of, or a substitute for, an earlier application, and (B) all claims of the new application (1) are drawn to the same invention claimed in the earlier application,* and (2) would have been properly finally rejected on the grounds and art of record in the next Office action if they had been entered in the earlier application.

The claims of an application for which a request for continued examination (RCE) has been filed may be finally rejected in the action immediately subsequent to the filing of the RCE (with a submission and fee under 37 CFR 1.114) *where all the claims in the application after the entry of the submission under 37 CFR 1.114 (A) are drawn to the same invention claimed in the application prior to the entry of the submission under 37CFR 1.114, and (B) would have been properly finally rejected on the grounds and art of record in the next Office action if they had been entered in the application prior to the filing of the RCE under 37 CFR 1.114.*

706.07(d) Final Rejection, Withdrawal of, Premature

If, on request by applicant for reconsideration, the primary examiner finds the final rejection to have been premature, he or she should withdraw the finality of the rejection. The finality of the Office action must be withdrawn while the application is still pending. The examiner cannot withdraw the final rejection once the application is abandoned. Once the finality of the Office action has been withdrawn, the next Office action may be made final if the conditions set forth in MPEP § 706.07(a) are met.

DECISION

According to the cited portions above, in making final rejections, the examiner shall repeat or state all grounds of rejection then considered applicable to the claims in the application, *clearly stating the reasons in support thereof.* In this case, final rejections mailed 6/28/06 and 7/22/08 clearly state all grounds of rejection applicable to the claims in the application, including claim 16 which appear to be rejected as being anticipated by Wolfe et. al. according to the grounds of rejection statement addressing claims 1-33 in the office action and the disposition of claims section item 6 which shows the status of the claims (1-33) as being rejected.

However, these office actions clearly fail to state the reasons in support of the rejection with respect to claim 16. Thus, the rejections are not clearly developed to such an extent that applicant may readily judge the advisability of an appeal unless a single previous Office action contains a complete statement supporting the rejection, as required according to the above cited portion of the MPEP. The finality of office action mailed 7/22/08 is hereby **withdrawn**.

For the reasons stated above, this petition is **GRANTED**.

Advisory Action mailed 2/20/08 was in response After-final amendment filed 09/19/07 including amendment to the specification, remarks/arguments and replacement drawings.

Once the finality of the Office action has been withdrawn, the next Office action may be made final if the conditions set forth in MPEP § 706.07(a) are met (see MPEP §706.07(d)).

Application will be forwarded to examiner for proper treatment of applicant's response mailed 9/19/07 and arguments/remarks presented on 1/14/09 and new office action will be mailed in due course.

Furthermore, since the petition under 37 CFR § 1.181 requires no fee, Petitioner's Deposit Account No. 07-0832 will be credited $400.00 for the petition fee under 37 CFR § 1.182 paid on January 14, 2009.

/bp/

/Beatriz Prieto/

Beatriz Prieto, Quality Assurance Specialist
Technology Center 2400,
Network, Multiplexing, Cable and Security

UNITED STATES PATENT AND TRADEMARK OFFICE

UNITED STATES DEPARTMENT OF COMMERCE
United States Patent and Trademark Office
Address: COMMISSIONER FOR PATENTS
P.O. Box 1450
Alexandria, Virginia 22313-1450
www.uspto.gov

APPLICATION NO.	FILING DATE	FIRST NAMED INVENTOR	ATTORNEY DOCKET NO.	CONFIRMATION NO.
10/788,559	02/26/2004	Nizar Allibhoy	PU050096	9141

24498 7590 05/08/2009

Thomson Licensing LLC
P.O. Box 5312
Two Independence Way
PRINCETON, NJ 08543-5312

EXAMINER	
EL CHANTI, HUSSEIN A	

ART UNIT	PAPER NUMBER
2457	

MAIL DATE	DELIVERY MODE
05/08/2009	PAPER

Please find below and/or attached an Office communication concerning this application or proceeding.

The time period for reply, if any, is set in the attached communication.

UNITED STATES PATENT AND TRADEMARK OFFICE

UNITED STATES DEPARTMENT OF COMMERCE
United States Patent and Trademark Office
Address: COMMISSIONER FOR PATENTS
P.O. Box 1450
Alexandria, Virginia 22313-1450
www.uspto.gov

Robert D. Shedd, Patent Operations
THOMSON Licensing LLC
P.O. Box 5312
Princeton, NJ 08543-5312

Mail Date: 04/21/2010

Applicant	: Nizar Allibhoy	: DECISION ON REQUEST FOR
Patent Number	: 7631072	: RECALCULATION of PATENT
Issue Date	: 12/08/2009	: TERM ADJUSTMENT IN VIEW
Appliction No	: 10/788,559	: OF WYETH AND NOTICE OF INTENT TO
Filed	: 02/26/2004	: ISSUE CERTIFICATE OF CORRECTION
		:

The Request for Recalculation is **GRANTED** to the extent indicated.

The patent term adjustment has been determined to be **870** days. The USPTO will *sua sponte* issue a certificate of correction reflecting the amount of PTA days determined by the recalculation.

Prior to the issuance of the certificate of correction, the USPTO will afford patentee an opportunity to be heard and request reconsideration. Accordingly, patentee has **one month or thirty (30) days**, whichever is longer, to file a request for reconsideration of this patent term adjustment calculation. See 35 U.S.C. 154(b)(3)(B)(ii) and 37 CFR 1.322(a)(4). No extensions of time will be granted under 37 CFR 1.136.

Patentee should use document code PET.OP if electronically filing a request for reconsideration of this patent term adjustment calculation. The patentee must also include the information required by 37 CFR 1.705(b)(2) and the fee required by 37 CFR 1.18(e). If patentee does not file a timely request for reconsideration of this patent term adjustment calculation including the information required by 37 CFR 1.705(b)(2) and the fee required by 37 CFR 1.18(e), the USPTO will issue a certificate of correction reflecting the PTA determination noted above.

Patentee should be aware that in order to preserve the right to review in the United States District Court for the District of Columbia of the USPTO patent term adjustment determination, patentee must ensure that he or she also take the steps required under 35 U.S.C. 154(b)(4)(A) in a timely manner. Nothing in the request for recalculation should be construed as providing an alternative time frame for commencing a civil action under 35 U.S.C. 154(b)(4)(A).

Any questions concerning this decision should be directed to the Office of Patent Legal Administration at 571-272-7702.

UNITED STATES PATENT AND TRADEMARK OFFICE

Commissioner for Patents
United States Patent and Trademark Office
P.O. Box 1450
Alexandria, VA 22313-1450
www.uspto.gov

JOHN T. WINBURN
100 BOSCH BOULEVARD
NEW BERN NC 28562

COPY MAILED

JUL 12 2006

OFFICE OF PETITIONS

In re Application of	:	
Anton STEMPFLE et al.	:	DECISION ON PETITIONS
Application No. 10/788,569	:	UNDER 37 CFR 1.183 AND
Filed: February 27, 2004	:	UNDER 37 CFR 1.78(a)(3)
Attorney Docket No. 2001P14034WOUS	:	

This is a decision on the petition under 37 CFR 1.183, filed March 20, 2006, requesting waiver of 37 CFR 1.78(a)(3) as that rule operates in conjunction with 37 CFR 1.17(t), and a decision on the petition under 37 CFR 1.78(a)(3), filed April 28, 2006, to accept an unintentionally delayed claim under 35 U.S.C. § 120 and 365(c) for the benefit of priority to prior-filed PCT Application No. PCT/EP02/09697, filed August 30, 2002, set forth in the accompanying Application Data Sheet.

The petition under 37 CFR 1.183 is **DISMISSED** as moot in view of the request filed April 28, 2006, withdrawing the petition to waive the surcharge fee requirement of 37 CFR 1.78(a)(3). No fee has been assessed to petitioner's deposit account for the petition under 37 CFR 1.183.

The petition under 37 CFR 1.78(a)(3) is **GRANTED.**

A petition for acceptance of a claim for late priority under 37 CFR 1.78(a)(3) is only applicable to those applications filed on or after November 29, 2000. Further, the petition is appropriate only after the expiration of the period specified in 37 CFR 1.78(a)(2)(ii). In addition, the petition under 37 CFR 1.78(a)(3) must be accompanied by:

(1) the reference required by 35 U.S.C. § 120 and 37 CFR 1.78(a)(2)(i) of the prior-filed application, unless previously submitted;

(2) the surcharge set forth in § 1.17(t); and

(3) a statement that the entire delay between the date the claim was due under 37 CFR 1.78(a)(2)(ii) and the date the claim was filed was unintentional. The Commissioner may require additional information where there is a question whether the delay was unintentional.

All the above requirements having been satisfied, the late claim for priority under 35 U.S.C. § 120 and 365(c) is accepted as being unintentionally delayed.

The granting of the petition to accept the delayed benefit claim to the prior-filed application under 37 CFR 1.78(a)(3) should not be construed as meaning that the application is entitled to the benefit of the prior-filed application. In order for the application to be entitled to the benefit of the prior-filed application, all other requirements under 35 U.S.C. §§ 120 and 365(c) and 37 CFR 1.78(a)(1) and (a)(2) must be met. Similarly, the fact that the corrected Filing Receipt accompanying this decision on petition includes the prior-filed application should not be construed as meaning that applicant is entitled to the claim for benefit of priority to the prior-filed application noted thereon. Accordingly, the examiner will, in due course, consider this benefit claim and determine whether the application is entitled to the benefit of the earlier filing date.

A corrected Filing Receipt, which includes the priority claim to the prior-filed application, accompanies this decision on petition.

Any inquiries concerning this decision may be directed to David Bucci at (571) 272-7099. All other inquiries concerning either the examination procedures or status of the application should be directed to the Technology Center.

This application is being forwarded to the examiner of Technology Center Art Unit 3744 for appropriate action on the amendment filed April 28, 2006, including consideration of applicant's entitlement to claim benefit of priority under 35 U.S.C. § 120 and 365(c) to the above-noted, prior-filed PCT application.

Brian Hearn
Petitions Examiner
Office of Petitions

ATTACHMENT: Corrected Filing Receipt

UNITED STATES PATENT AND TRADEMARK OFFICE

UNITED STATES DEPARTMENT OF COMMERCE
United States Patent and Trademark Office
Address: COMMISSIONER FOR PATENTS
P.O. Box 1450
Alexandria, Virginia 22313-1450
www.uspto.gov

APPL NO.	FILING OR 371 (c) DATE	ART UNIT	FIL FEE REC'D	ATTY.DOCKET NO	DRAWINGS	TOT CLMS	IND CLMS
10/788,569	02/27/2004	3744	900	2001P14034WOUS	2	8	1

CONFIRMATION NO. 9444

46726
JOHN T. WINBURN
100 BOSCH BOULEVARD
NEW BERN, NC 28562

CORRECTED FILING RECEIPT

OC000000019507739

Date Mailed: 07/06/2006

Receipt is acknowledged of this regular Patent Application. It will be considered in its order and you will be notified as to the results of the examination. Be sure to provide the U.S. APPLICATION NUMBER, FILING DATE, NAME OF APPLICANT, and TITLE OF INVENTION when inquiring about this application. Fees transmitted by check or draft are subject to collection. Please verify the accuracy of the data presented on this receipt. **If an error is noted on this Filing Receipt, please mail to the Commissioner for Patents P.O. Box 1450 Alexandria Va 22313-1450. Please provide a copy of this Filing Receipt with the changes noted thereon. If you received a "Notice to File Missing Parts" for this application, please submit any corrections to this Filing Receipt with your reply to the Notice. When the USPTO processes the reply to the Notice, the USPTO will generate another Filing Receipt incorporating the requested corrections (if appropriate).**

Applicant(s)

Anton Stempfle, Giengen, GERMANY;
Christian Mayershofer, Grundremmingen, GERMANY;
Rainer Brachert, Gundelfingen, GERMANY;
Andreas Reiter, Morslingen, GERMANY;
Rudolf Schmidt, Giengen, GERMANY;

Assignment For Published Patent Application

BSH Bosch und Siemens Hausgerate GmbH, Munich, GERMANY

Power of Attorney: The patent practitioners associated with Customer Number **000046726**.

Domestic Priority data as claimed by applicant

This application is a CON of PCT/EP02/09697 08/30/2002

Foreign Applications

GERMANY 10143240.2 09/04/2001
If Required, Foreign Filing License Granted: 05/21/2004

The country code and number of your priority application, to be used for filing abroad under the Paris Convention, is US10/788,569

Projected Publication Date: Not Applicable

Non-Publication Request: No

Early Publication Request: No

Title

Refrigerating appliance

Preliminary Class

062

PROTECTING YOUR INVENTION OUTSIDE THE UNITED STATES

Since the rights granted by a U.S. patent extend only throughout the territory of the United States and have no effect in a foreign country, an inventor who wishes patent protection in another country must apply for a patent in a specific country or in regional patent offices. Applicants may wish to consider the filing of an international application under the Patent Cooperation Treaty (PCT). An international (PCT) application generally has the same effect as a regular national patent application in each PCT-member country. The PCT process **simplifies** the filing of patent applications on the same invention in member countries, but **does not result** in a grant of "an international patent" and does not eliminate the need of applicants to file additional documents and fees in countries where patent protection is desired.

Almost every country has its own patent law, and a person desiring a patent in a particular country must make an application for patent in that country in accordance with its particular laws. Since the laws of many countries differ in various respects from the patent law of the United States, applicants are advised to seek guidance from specific foreign countries to ensure that patent rights are not lost prematurely.

Applicants also are advised that in the case of inventions made in the United States, the Director of the USPTO must issue a license before applicants can apply for a patent in a foreign country. The filing of a U.S. patent application serves as a request for a foreign filing license. The application's filing receipt contains further information and guidance as to the status of applicant's license for foreign filing.

Applicants may wish to consult the USPTO booklet, "General Information Concerning Patents" (specifically, the section entitled "Treaties and Foreign Patents") for more information on timeframes and deadlines for filing foreign patent applications. The guide is available either by contacting the USPTO Contact Center at 800-786-9199, or it can be viewed on the USPTO website at http://www.uspto.gov/web/offices/pac/doc/general/index.html.

For information on preventing theft of your intellectual property (patents, trademarks and copyrights), you may wish to consult the U.S. Government website, http://www.stopfakes.gov. Part of a Department of Commerce initiative, this website includes self-help "toolkits" giving innovators guidance on how to protect intellectual property in specific countries such as China, Korea and Mexico. For questions regarding patent enforcement issues, applicants may call the U.S. Government hotline at 1-866-999-HALT (1-866-999-4158).

LICENSE FOR FOREIGN FILING UNDER
Title 35, United States Code, Section 184
Title 37, Code of Federal Regulations, 5.11 & 5.15

GRANTED

The applicant has been granted a license under 35 U.S.C. 184, if the phrase "IF REQUIRED, FOREIGN FILING LICENSE GRANTED" followed by a date appears on this form. Such licenses are issued in all applications where the conditions for issuance of a license have been met, regardless of whether or not a license may be required as set forth in 37 CFR 5.15. The scope and limitations of this license are set forth in 37 CFR 5.15(a) unless an earlier license has been issued under 37 CFR 5.15(b). The license is subject to revocation upon written notification. The

date indicated is the effective date of the license, unless an earlier license of similar scope has been granted under 37 CFR 5.13 or 5.14.

This license is to be retained by the licensee and may be used at any time on or after the effective date thereof unless it is revoked. This license is automatically transferred to any related applications(s) filed under 37 CFR 1.53(d). This license is not retroactive.

The grant of a license does not in any way lessen the responsibility of a licensee for the security of the subject matter as imposed by any Government contract or the provisions of existing laws relating to espionage and the national security or the export of technical data. Licensees should apprise themselves of current regulations especially with respect to certain countries, of other agencies, particularly the Office of Defense Trade Controls, Department of State (with respect to Arms, Munitions and Implements of War (22 CFR 121-128)); the Bureau of Industry and Security, Department of Commerce (15 CFR parts 730-774); the Office of Foreign Assets Control, Department of Treasury (31 CFR Parts 500+) and the Department of Energy.

NOT GRANTED

No license under 35 U.S.C. 184 has been granted at this time, if the phrase "IF REQUIRED, FOREIGN FILING LICENSE GRANTED" DOES NOT appear on this form. Applicant may still petition for a license under 37 CFR 5.12, if a license is desired before the expiration of 6 months from the filing date of the application. If 6 months has lapsed from the filing date of this application and the licensee has not received any indication of a secrecy order under 35 U.S.C. 181, the licensee may foreign file the application pursuant to 37 CFR 5.15(b).

UNITED STATES PATENT AND TRADEMARK OFFICE

Commissioner for Patents
United States Patent and Trademark Office
P.O. Box 1450
Alexandria, VA 22313-1450
www.uspto.gov

HUNTON & WILLIAMS LLP
ENERGY PLAZA, 30TH FLOOR
1601 BRYAN STREET
DALLAS, TX 75201-3402

COPY MAILED

AUG 13 2007

OFFICE OF PETITIONS

In re Patent No. 6,996,483 :
Issue Date: February 7, 2006 :
Application No. 10/788,617 : ON PETITION
Filed: February 27, 2004 :
Attorney Docket No. 82274.98 :

This is a decision on the petition filed July 19, 2006, which is being treated as a request under 37 CFR 3.81(b)[1] to correct the name of the assignee on the front page of the above-identified patent by way of a Certificate of Correction.

The request is **GRANTED**.

Telephone inquiries concerning this decision may be directed to the undersigned at (571) 272-3208. Inquiries regarding the issuance of a certificate of correction should be directed to the Certificate of Correction Branch at (571) 272-4200.

The Certificates of Correction Branch will be notified of this decision granting the petition under 37 CFR 3.81(b) and directing issuance of the requested Certificate of Correction.

Karen Creasy

Karen Creasy
Petitions Examiner
Office of Petitions

[1] *See* MPEP 1309, subsection II; and Official Gazette of June 22, 2004.

UNITED STATES PATENT AND TRADEMARK OFFICE

Commissioner for Patents
United States Patent and Trademark Office
P.O. Box 1450
Alexandria, VA 22313-1450
www.uspto.gov

HARNESS DICKEY & PIERCE P.L.C.
SUITE 400
5445 CORPORATE DRIVE
TROY, MI 48098

COPY MAILED

JUL 2 8 2005

OFFICE OF PETITIONS

In re Application of :
Farbod Aram :
Application No. 10/788,618 : ON PETITION
Filed: February 27, 2004 :
Attorney Docket No. MP0401

This is a decision on the petition, filed June 27, 2005 under 37 CFR 1.313(c)(2), to withdraw the above-identified application from issue after payment of the issue fee.

The petition is **GRANTED**.

The above-identified application is withdrawn from issue for consideration of a submission under 37 CFR 1.114 (request for continued examination). See 37 CFR 1.313(c)(2).

Petitioner is advised that the issue fee paid on May 26, 2005 in the above-identified application cannot be refunded. If, however, the above-identified application is again allowed, petitioner may request that it be applied towards the issue fee required by the new Notice of Allowance.[1]

Telephone inquiries should be directed to Irvin Dingle at (571) 272-3210.

This matter is being referred to Technology Center AU 2816 for processing of the request for continued examination under 37 CFR 1.114 and for consideration of the concurrently filed Information Disclosure Statement.

Irvin Dingle
Petitions Examiner
Office of Petitions
Office of the Deputy Commissioner
for Patent Examination Policy

[1] The request to apply the issue fee to the new Notice may be satisfied by completing and returning the new Issue Fee Transmittal Form PTOL-85(b), which includes the following language thereon: Commissioner for Patents is requested to apply the Issue Fee and Publication Fee (if any) or re-apply any previously paid issue fee to the application identified above. Petitioner is advised that, whether a fee is indicated as being due or not, the Issue Fee Transmittal Form **must** be completed and timely submitted to avoid abandonment. Note the language in bold text on the first page of the Notice of Allowance and Fee(s) Due (PTOL-85).

UNITED STATES PATENT AND TRADEMARK OFFICE

COMMISSIONER FOR PATENTS
UNITED STATES PATENT AND TRADEMARK OFFICE
P.O. BOX 1450
ALEXANDRIA, VA 22313-1450
www.uspto.gov

COPY MAILED

AUG 18 2006

OFFICE OF PETITIONS

CNH AMERICA LLC
INTELLECTUAL PROPERTY LAW DEPARTMENT
700 STATE STREET
RACINE WI 53404

In re Application of :
Troy L. Cooper, et al. :
Application No. 10/788,624 : ON PETITION
Filed: February 27, 2004 :
Attorney Docket No. 17319 :

This is a decision on the petition under 37 CFR 1.137(b), filed March 27, 2006, to revive the above-identified application.

There is no indication that the person signing the instant petition was ever given a power of attorney or authorization of agent to prosecute the above-identified application. However, in accordance with 37 CFR 1.34(a), the signature of William T. Kryger appearing on the petition shall constitute a representation to the United States Patent and Trademark Office that he is authorized to represent the particular party on whose behalf he acts. A courtesy copy of this decision is being mailed to petitioner. However, if Mr. Kryger desires to receive future correspondence regarding this application, the appropriate power of attorney or authorization of agent must be submitted. Until otherwise instructed, all future correspondence regarding this application will be directed solely to the address of record.

This application became abandoned for failure to timely reply to the final Office action mailed July 13, 2005. A Notice of Abandonment was mailed March 6, 2006. In response, on March 27, 2006 the present petition was filed along with, inter alia, a 3-month extension of time and a Request for Continued Examination.

Extensions of time under 37 CFR 1.136 are available only if asked for prior to or with the response. In no case, however, may an applicant respond later than the maximum time period set by statute. Accordingly, if the question of abandonment arises when the provisions of 37 CFR 1.136 can no longer be used, then the application is abandoned when the unextended time for response has expired. Since, no extension of time fees are due on a petition for revival, the extension fees submitted with the present petition are being credited to counsel's deposit account.

The petition is **GRANTED**.

The application is revived for consideration of a submission under 37 CFR 1.114 (request for continued examination).

Telephone inquiries concerning this decision should be directed to the undersigned at (571) 272-3204.

The application file is being forwarded to Technology Center AU 3671, for further processing of the request for continued examination under 37 CFR 1.114 filed March 27, 2006.

Sherry D. Brinkley
Petitions Examiner
Office of Petitions

cc: WILLIAM T. KRYGER
BOYLE, FREDRICKSON, NEWHOLM,
STEIN & GRATZ, S.C.
250 EAST WISCONSIN AVENUE, SUITE 1030
MILWAUKEE, WS 53202

UNITED STATES PATENT AND TRADEMARK OFFICE

Commissioner for Patents
United States Patent and Trademark Office
P.O. Box 1450
Alexandria, VA 22313-1450
www.uspto.gov

DECHERT LLP
P.O. BOX 390460
MOUNTAIN VIEW, CA 94039-0460

MAILED

FEB 27 2009

OFFICE OF PETITIONS

In re Application of :
Linda **LEE, et al.** :
Application No. 10/788,660 : DECISION ON PETITION
Filed: February 26, 2004 : UNDER 37 CFR 1.137(b)
Attorney Docket No. **375461-001T2C2(355294)** :

This is a decision on the petition under the unintentional provisions of 37 CFR 1.137(b), filed August 27, 2008, to revive the above-identified application.

The petition is **DISMISSED**.

The application became abandoned for failure to timely pay the issue and publication fees on or before August 20, 2008, as required by the Notice of Allowance/Allowability, mailed May 20, 2008, which set a statutory period for reply of three (3) months. Accordingly, the application became abandoned on August 21, 2008.

A grantable petition under 37 CFR 1.137(b) must be accompanied by: (1) the required reply, unless previously filed; (2) the petition fee as set forth in 37 CFR 1.17(m); (3) a statement that the entire delay in filing the required reply from the due date for the reply until the filing of a grantable petition pursuant to 37 CFR 1.137(b) was unintentional; and (4) any terminal disclaimer (and fee as set forth in 37 CFR 1.20(d)) required by 37 CFR 1.137(d). Where there is a question as to whether either the abandonment or the delay in filing a petition under 37 CFR 1.137 was unintentional, the Director may require additional information. See MPEP 711.03(c)(II)(C) and (D). The instant petition lacks item (1) the required reply, payment of the issue/publication fees and supplemental oath/declaration as required by the Notice of Allowability mailed on May 20, 2008.

35 U.S.C. 41(a)(7) and 151 each require payment of the issue fee as a condition of reviving an application abandoned or patent lapsed for failure to pay the issue fee. The filing of a continuing application without payment of the issue fee or any outstanding balance thereof is not an acceptable reply in an application abandoned or patent lapsed for failure to the pay the issue fee or any portion thereof.

Any request for reconsideration of this decision must be submitted within TWO (2) MONTHS from the mail date of this decision. Extensions of time under 37 CFR 1.136(a) are permitted. The reconsideration request should include a cover letter entitled

"Renewed Petition under 37 CFR 1.137(b)." This is **not** a final agency action within the meaning of 5 U.S.C. § 704.

Further correspondence with respect to this matter should be addressed as follows:

By Mail:
Mail Stop PETITION
Commissioner for Patents
P. O. Box 1450
Alexandria, VA 22313-1450

By hand:
U. S. Patent and Trademark Office
Customer Service Window, Mail Stop Petitions
Randolph Building
401 Dulany Street
Alexandria, VA 22314

The centralized facsimile number is **(571) 273-8300.**

Telephone inquiries concerning this decision should be directed to Monica A. Graves at (571) 272-7253.

Brian W. Brown
Petitions Examiner
Office of Petitions

UNITED STATES PATENT AND TRADEMARK OFFICE

Commissioner for Patents
United States Patent and Trademark Office
P.O. Box 1450
Alexandria, VA 22313-1450
www.uspto.gov

DECHERT LLP
P.O. BOX 390460
MOUNTAIN VIEW CA 94039-0460

MAILED

MAY 14 2009

OFFICE OF PETITIONS

In re Application of :
Linda G. LEE, et al. :
Application No. 10/788,660 : DECISION ON PETITION
Filed: February 26, 2004 : UNDER 37 CFR 1.137(b)
Attorney Docket No. **375461-001T2C2 (355294)** :

This is a decision on the renewed petition under the unintentional provisions of 37 CFR 1.137(b), filed April 10, 2009, to revive the above-identified application.

The petition is **GRANTED**.

This application became abandoned for failure to timely pay the issue/publication fees on or before August 20, 2008, as required by the Notices of Allowance/Allowability, mailed May 20, 2008. Accordingly, the date of abandonment of this application is August 21, 2008.

A review of the file record discloses that petitioner incorrectly paid the *plant application* issue fee of $1190. The current issue fee for a large entity ***utility application*** is $1510. Petitioner's deposit account number 50-2778 has been charged $320, the amount deficient as authorized by the Issue Fee Transmittal submitted on April 10, 2009.

The petition satisfies the requirements of 37 CFR 1.137(b) in that petitioner has supplied (1) the reply in the form of payment of the issue fee of $1510, the publication fee of $300, and a supplemental oath/declaration; (2) the petition fee of $1540; and (3) an adequate statement of unintentional delay.

Telephone inquiries concerning this decision should be directed to Monica A. Graves at (571) 272-7253.

This application is being referred to the Office of Data Management for processing into a patent.

Brian W. Brown
Petitions Examiner
Office of Petitions

UNITED STATES PATENT AND TRADEMARK OFFICE

Commissioner for Patents
United States Patent and Trademark Office
P.O. Box 1450
Alexandria, VA 22313-1450
www.uspto.gov

QUINN LAW GROUP, PLLC
39555 ORCHARD HILL PLACE
SUITE # 520
NOVI MI 48375

COPY MAILED

OCT 1 0 2008

OFFICE OF PETITIONS

In re Patent No. 6,874,488 :
Issue Date: April 5, 2005 :
Application No. 10/788,680 : NOTICE
Filed: February 27, 2004 :
Attorney Docket No. WAH0108PUS :

This is a notice regarding your request for acceptance of a fee deficiency submission under 37 CFR 1.28. On September 1, 1998, the Court of Appeals for the Federal Circuit held that 37 CFR 1.28(c) is the sole provision governing the time for correction of the erroneous payment of the issue fee as a small entity. **See DH Technology v. Synergystex International, Inc. 154 F.3d 1333, 47 USPQ2d 1865 (Fed. Cir. Sept. 1, 1998).**

The Office no longer investigates or rejects original or reissue applications under 37 CFR 1.56. **1098 Off. Gaz. Pat. Office 502 (January 3, 1989)**. Therefore, nothing in this Notice is intended to imply that an investigation was done.

Your fee deficiency submission under 37 CFR 1.28 is hereby **ACCEPTED**.

This patent is no longer entitled to small entity status. Accordingly, all future fees paid in this patent must be paid at the large entity rate.

Liana Walsh
Petitions Examiner
Office of Petitions

UNITED STATES PATENT AND TRADEMARK OFFICE

Commissioner for Patents
United States Patent and Trademark Office
P.O. Box 1450
Alexandria, VA 22313-1450
www.uspto.gov

QUINN LAW GROUP, PLLC
39555 ORCHARD HILL PLACE
SUITE # 520
NOVI MI 48375

COPY MAILED

OCT 1 0 2008

OFFICE OF PETITIONS

In re Patent No. 6,868,841 :
Issue Date: March 22, 2005 :
Application No. 10/788,681 : NOTICE
Filed: February 27, 2004 :
Attorney Docket No. WAH0109PUS :

This is a notice regarding your request for acceptance of a fee deficiency submission under 37 CFR 1.28. On September 1, 1998, the Court of Appeals for the Federal Circuit held that 37 CFR 1.28(c) is the sole provision governing the time for correction of the erroneous payment of the issue fee as a small entity. **See DH Technology v. Synergystex International, Inc. 154 F.3d 1333, 47 USPQ2d 1865 (Fed. Cir. Sept. 1, 1998).**

The Office no longer investigates or rejects original or reissue applications under 37 CFR 1.56. **1098 Off. Gaz. Pat. Office 502 (January 3, 1989)**. Therefore, nothing in this Notice is intended to imply that an investigation was done.

Your fee deficiency submission under 37 CFR 1.28 is hereby **ACCEPTED**.

This patent is no longer entitled to small entity status. Accordingly, all future fees paid in this patent must be paid at the large entity rate.

Liana Walsh
Petitions Examiner
Office of Petitions

UNITED STATES PATENT AND TRADEMARK OFFICE

Commissioner for Patents
United States Patent and Trademark Office
P.O. Box 1450
Alexandria, VA 22313-1450
www.uspto.gov

3M INNOVATIVE PROPERTIES COMPANY
PO BOX 33427
ST. PAUL, MN 55133-3427

COPY MAILED
DEC 11 2006
OFFICE OF PETITIONS

In re Application of :
Richard J. Scherer, et. al. :
Application No. 10/788,684 : ON PETITION
Filed: February 27, 2004 :
Attorney Docket No. 59419US002 :

This is a decision on the petition under 37 CFR 1.137(b), filed July 27, 2006, to revive the above-identified application.

The petition is **DISMISSED AS MOOT**.

A final Office action was issued on December 29, 2005. On February 28, 2006, an amendment in response to the Office action was submitted. The Office issued an Advisory action mailed on March 27, 2006. In response to the Advisory action, petitioner filed on April 27, 2006 a Notice of Appeal with fee and a one (1) month extension of time. Therefore, applicant has two months from the filing of the Notice of Appeal submitted on April 27, 2006 to file an Appeal Brief and fee with extensions of time available under 37 CFR 1.136(a).

Since the Appeal Brief and fee filed on July 27, 2006, was filed within the extendable time period, the Request for Refund filed October 4, 2006, is being treated as a request for a one-month extension of time. Accordingly, this application is not considered abandoned and the instant petition is unnecessary.

This application is being referred to Technology Center Art Unit 2833, for further processing.

Telephone inquiries concerning this decision should be directed to the undersigned at (571) 272-3226.

Andrea Smith
Petitions Examiner
Office of Petitions

UNITED STATES PATENT AND TRADEMARK OFFICE

Commissioner for Patents
United States Patent and Trademark Office
P.O. Box 1450
Alexandria, VA 22313-1450
www.uspto.gov

August 19, 2009

Shawn Doman
Campbell Stephenson, LLP
11401 Century Oaks Terrace
Building H, Suite 250
Austin, TX 78758

Patent No.: 7,565,568 B1
Application No.: 10/788,698
Inventor: Mukul Kumar, et al.
Issued: July 21, 2009
Title: **METHOD AND SYSTEM FOR VIRTUALIZATION SWITCH FAILOVER**

Re: Request for Certificate of Correction

Consideration has been given your request for the issuance of a certificate of correction for the above-identified patent under the provisions of Rule(s) 1.322 and/or 1.323.

Assignees' names and addresses (assignment data) printed in a patent, are based *solely* on information supplied in the appropriate space for identifying the assignment data, i.e., item 3 of the Issue Fee Transmittal Form PTOL-85B. Granting of a request under 37 CFR 3.81(b) is required to correct applicant's error providing ***incorrect or erroneous*** assignment data, *before* issuance of a Certificate of Correction, under 37 CFR 1.323 *(see Manual of Patent Examining Procedures (M.P.E.P) Chp.1400, sect. 1481).* This procedure is required *at any time after the issue fee is paid*, including after issuance of the patent.

In view of the foregoing, your request, in this matter, is hereby denied.

A request to correct the Assignee under 37 CFR 3.81(b) should include:

A. **the processing fee set forth in 37 CFR 1.117(h) (currently $130);**
B. a statement that the failure to include the correct assignee name on the PTOL-85B was inadvertent; and
C. a copy of the Notice of Recordation of Assignment Document, reflecting the reel and frame number where the assignment(s) is recorded and/or reflecting proof of *the date* the assignment was submitted for recordation.

In the Request, Applicant(s) may request that the file be forwarded to Certificates of Correction Branch, for issuance of a Certificate of Correction, if the Request is granted.

Any request under 37 CFR 3.81(b) should be directed to the following address or facsimile number:

By mail:	Mail Stop PETITIONS Commissioner for Patents Post Office Box 1450 Alexandria, VA 22313-1450
By hand:	Customer Service Window Mail Stop Petitions Randolph Building 401 Dulany Street Alexandria, VA 22314
By fax:	(571) 273-0025 ATTN: Office of Petitions

If a fee (currently $100) was previously submitted for consideration of a Request for Certificate of Correction, under CFR 1.323, to correct assignment data, no additional fee is required.

/Virginia Tolbert/
Virginia Tolbert
For Mary Diggs, Supervisor
Decisions & Certificate of Correction Branch
571 272-0460 (voice)
571 270-9892 (fax)

vt

UNITED STATES PATENT AND TRADEMARK OFFICE

Commissioner for Patents
United States Patent and Trademark Office
P.O. Box 1450
Alexandria, VA 22313-1450
www.uspto.gov

ROSSI KIMMS & MCDOWELL LLP
20609 GORDON PARK SQUARE SUITE 150
ASHBURN VA 20147

MAILED

JUN 19 2009

OFFICE OF PETITIONS

In re Application of	:	
Yamamoto, et al.	:	
Application No. 10/788,720	:	ON PETITION
Filed: February 27, 2004	:	
Attorney Docket No. KIOI:039	:	

This is a decision on the petition to revive under 37 CFR 1.137(b), filed May 16, 2009.

The petition under 37 CFR 1.137(b) is **GRANTED**.

The above-identified application became abandoned for failure to timely file a proper Appeal Brief. The Office mailed a Notice of Noncompliant Appeal Brief on November 24, 2008, setting a one month period for reply. Applicant filed an Appeal Brief in response on December 5, 2008. However, on March 24, 2009, the Office mailed a communication indicating that the appeal was dismissed and the application was abandoned. The Office mailed a Notice of Abandonment on March 27, 2009.

With the instant petition, applicant paid the petition fee, made the proper statement of unintentional delay, and submitted the required reply in the form of an RCE.

The application is being forwarded to Group Art Unit 3656 for consideration of the RCE, filed May 16, 2009.

Telephone inquiries related to this decision should be directed to the undersigned at (571)272-3207.

Cliff Congo
Petitions Attorney
Office of Petitions

UNITED STATES PATENT AND TRADEMARK OFFICE

OFFICE

COPY MAILED

FEB 0 8 2006

Director's Office
Office of Patent Publication

MCNEES, WALLACE & NURICK LLC
100 PINE STREET
P.O. BOX 1166
HARRISBURG, PA 17108-1166

In re Application of :
WILLS, FRANK EUGENE, et al. :
Application No. 10/788,723 : **DECISION ON PETITION**
Filed: February 27, 2004 :
Attorney Docket No. 20712-0062 :

This is a decision on the Petition To Withdraw Holding Of Abandonment Under 37 CFR 1.181(a), received in the United States Patent & Trademark (USPTO) on January 20, 2006.

The petition is **DISMISSED**.

The above-identified application was held abandoned for Applicants failure to timely pay the issue fee and publication, as required in the Notice of Allowance mailed September 6, 2005. The Notice of Abandonment indicates that the submitted fee of $1,400 is insufficient. A balance of $300 is due. Issue fee required is $1,400 and the publication fee is $300.

The Office acknowledges receipt of PART B – FEE(S) TRANSMITTAL on November 18, 2005, authorizing that the Issue Fee, Publication Fee, and Advance Order Copies Fee be charged to Deposit Account No. 50-1059. Unfortunately, on November 18, 2005, when an attempt was made by the Office of Finance to charge such fees, there was insufficient funds in the Deposit Account to charge all the required fees—Publication fee of $300.

37 CFR 1.25 (a) and (b), which states in part:

> 1.25(a) ...An amount sufficient to cover all fee, services, copies, etc., requested must always be on deposit. Charges to accounts with insufficient funds will not be accepted."
> 1.25 (b) ...An authorization to charge a fee to a deposit account will not be considered payment of the fee on the date the authorization to charge the fee is effective as to the particular fee to be charged unless sufficient funds are present in the account to cover the fee.

In light of the non-compliance with 37 CFR 1.25, the holding of abandonment cannot be withdrawn.

Applicant may seek relief by filing a petition for Revival of Abandoned Application under CFR § 1.137 (a) or (b). (Forms are available at USPTO website http://www.uspto.gov)

- Under 37 CFR 1.137(a), a petition for the revival of an ***unavoidably*** abandoned application
- Under 37 CFR 1.137(b), a petition for the revival of an ***unintentionally*** abandoned application

Further inquires with respect to filing a petition under 37 CFR § 1.137 may be directed to the Office of Petitions at 571-272-3282 or addressed as follows:

By mail: Mail Stop Petitions
Commissioner for Patents
Office of Petitions
P O Box 1450
Alexandria, VA 22313-1450

Telephone inquires concerning this decision matter may be directed to the undersigned at 703 308-9250.

Thomas E. Hawkins
Paralegal Specialist
Office of the Director
Office of Patent Publications

UNITED STATES PATENT AND TRADEMARK OFFICE

COMMISSIONER FOR PATENTS
UNITED STATES PATENT AND TRADEMARK OFFICE
P.O. BOX 1450
ALEXANDRIA, VA 22313-1450
www.uspto.gov

MCNEES, WALLACE & NURICK LLC
100 PINE STREET
P.O. BOX 1166
HARRISBURG, PA 17108-1166

COPY MAILED

JUL 1 1 2006

OFFICE OF PETITIONS

In re Application of
Frank E. Wills, et al.
Application No. 10/788,723
Filed: February 27, 2004
Attorney Docket No. 20712-0062

ON PETITION

This is a decision on the petition under 37 CFR 1.137(b) to revive the above-identified application, filed February 21, 2006.

The petition is **GRANTED**.

The application became abandoned for failure to pay the issue/publication fee on or before December 6, 2005. A Notice of Abandonment was mailed on January 20, 2006. In response, on February 21, 2006, the present petition was filed.

The petition satisfies the requirements of 37 CFR 1.137(b) in that petitioner has supplied (1) the reply in the form of the requisite publication fee; (2) the petition fee of $1,500; and (3) the required statement of unintentional delay.

The application is being referred to the Office of Publications to be processed into a patent.

Telephone inquires related to this decision should be directed to the undersigned at (571) 272-3204. Telephone inquiries related to processing at Publishing Division should be directed to (571) 272-4200.

Sherry D. Brinkley
Petitions Examiner
Office of Petitions

UNITED STATES PATENT AND TRADEMARK OFFICE

COMMISSIONER FOR PATENTS
UNITED STATES PATENT AND TRADEMARK OFFICE
P.O. BOX 1450
ALEXANDRIA, VA 22313-1450
www.uspto.gov

WILLIAM C. FUESS
FUESS & DAVIDENAS
SUITE II-G
10951 SORRENTO VALLEY ROAD
SAN DIEGO, CA 92121

COPY MAILED

JAN 19 2007

OFFICE OF PETITIONS

In re Application of :
John S. Fox :
Application No. 10/788,724 : ON PETITION
Filed: February 26, 2004 :
Attorney Docket No. LIG 0002P :

This is a decision in response to the petition, filed July 10, 2006, to revive the above-identified application under the provisions of 37 CFR 1.137(b) and copy thereof filed December 26, 2006.

The petition is **GRANTED**.

The above-identified application became abandoned for failure to reply in a timely manner to the non-final Office action mailed September 21, 2005, which set a shortened statutory period for reply of one (1) month or thirty (30) days (whichever is later). No extension of time under the provisions of 37 CFR 1.136(a) was obtained. It is noted that an Election was subsequently filed on November 28, 2005, using a Certificate of Mailing under 37 CFR 1.8 dated November 22, 2005. However, the Election was untimely since it did not include an appropriate petition for extension of time and fee. Consequently, on May 1, 2006, a Notice of Abandonment was mailed. In response, on July 10, 2006 the present petition was filed.

The petition satisfies the requirements of 37 CFR 1.137(b) in that petitioner has supplied (1) the response in the form of an election of the invention to be examined; (2) the petition fee of $750; and (3) the requisite statement of unintentional delay.

Telephone inquiries concerning this decision may be directed to the undersigned at (571) 272-3204. All other inquiries regarding this application should be directed to the Technology Center.

The application is being referred to Technology Center AU 2883 for consideration of the response filed July 10, 2006.

Sherry D. Brinkley
Petitions Examiner
Office of Petitions

UNITED STATES PATENT AND TRADEMARK OFFICE

COMMISSIONER FOR PATENTS
UNITED STATES PATENT AND TRADEMARK OFFICE
P.O. BOX 1450
ALEXANDRIA, VA 22313-1450
www.uspto.gov

MAILED

JUL 21 2008

TECHNOLOGY CENTER 2100

MARVELL/FINNEGAN HENDERSON LLP
c/o FINNEGAN, HENDERSON, FARABOW, GARNETT et. al.
901 NEW YORK AVENUE
WASHINGTON DC 20001-4413

In re Application of: Michael MORROW	)	
Application No. 10/788,725	)	*SUA SPONTE*
Attorney Docket No. MP1439	)	WITHDRAWAL OF HOLDING OF
Filed: February 26, 2004	)	ABANDONMENT
For: LOW POWER SEMI-TRACE	)	
INSTRUCTION CACHE	)	

The information and request for withdrawal of the holding of abandonment, filed October 30, 2007 is acknowledged.

A review of the application reveals that a Notice of Abandonment was mailed to the applicant on September 17, 2007. The notice incorrectly indicated that the instant application was being held abandoned for failure to timely file a proper reply to the requirement for Correction to Drawings that was contained in the Notice of Allowance communication (mailed on May 1, 2007). Applicant filed a response to the drawing requirement, with a replacement drawing, and amendments to the specification to incorporate the drawing changes as required by examiner, on July 31, 2007, along with the payment of the issue fee. Accordingly, the amendment/response was timely filed.

In view of these facts, the abandonment of the application was clearly in error and is hereby **VACATED**.

The application is being forwarded to the Supervisory Legal Instruments Examiner with instructions to **WITHDRAW** the holding of abandonment, and restore the instant application to pending status. The application will then be forwarded for Issue Processing.

Inquiries to this decision may be directed to Quality Assurance Specialist, Mano Padmanabhan at (571) 272-4210.

Mano Padmanabhan
Quality Assurance Specialist, TC 2100, WG 2180
Computer Architecture, Software, and Information Security

UNITED STATES PATENT AND TRADEMARK OFFICE

Commissioner for Patents
United States Patent and Trademark Office
P.O. Box 1450
Alexandria, VA 22313-1450
www.uspto.gov

NEW MARKET SERVICES CORPORATION
(FORMERLY ETHYL CORPORATION)
330 SOUTH 4TH STREET
RICHMOND, VA 23219

COPY MAILED
NOV 06 2008

In re Application of :
Lee D. Saathoff, et al. :
Application No. 10/788,732 : ON PETITION
Filed: February 27, 2004 :
Attorney Docket No. EI-7624 :

This is a decision on the petition under 37 CFR 1.137(b), filed July 28, 2008, to revive the above-identified application.

The petition is **GRANTED**.

There is no indication that the person signing the instant petition was ever given a power of attorney or authorization of agent to prosecute the above-identified application. However, in accordance with 37 CFR 1.34(a), the signature of Edward C. LaRose appearing on the petition shall constitute a representation to the United States Patent and Trademark Office that he is authorized to represent the particular party on whose behalf he acts. A courtesy copy of this decision is being mailed to petitioner. However, if Mr. LaRose desires to receive future correspondence regarding this application, the appropriate power of attorney or authorization of agent must be submitted. Until otherwise instructed, all future correspondence regarding this application will be directed solely to the address of record.

This application became abandoned for failure to timely reply to the final Office action mailed September 24, 2007. This decision precedes the mailing of a Notice of Abandonment. On July 28, 2008, the present petition was filed.

The petition satisfies the requirements of 37 CFR 1.137(b) in that petitioner has supplied (1) the reply in the form of a Request for Continued Examination (RCE), including the fee of $810; (2) the petition fee of $1,540; and (3) an adequate statement of unintentional delay[1].

[1] 37 CFR 1.137(b)(3) requires a statement that the entire delay in filing the required reply from the due date for the reply until the filing of a grantable petition pursuant to 37 CFR 1.137(b) was unintentional. While the statement is not made by an attorney of record, such statement is being treated as having been made as the result of a reasonable inquiry into the facts and circumstances of such delay. See 37 CFR 10.18(b) and Changes to Patent Practice and Procedure; Final Rule Notice, 62 Fed. Reg. 53131, 53178 (October 10, 1997), 1203 Off. Gaz. Pat. Office 63, 103 (October 21, 1997). In the event that such an inquiry has not been made, petitioner must make such an inquiry. If such inquiry results in the discovery that it is not correct that the entire delay in filing the required reply from the due date for the reply until the filing of a grantable petition pursuant to 37 CFR 1.137(b) was unintentional, petitioner must notify the Office.

Telephone inquiries concerning this decision should be directed to the undersigned at (571) 272-3204.

This application is being referred to Technology Center AU 1797 for processing of the RCE and for appropriate action by the Examiner in the normal course of business on the amendment submitted in accordance with 37 CFR 1.114.

Sherry D. Brinkley
Petitions Examiner
Office of Petitions

cc: EDWARD C. LAROSE
900 S. GAY STREET, SUITE 1871
KNOXVILLE, TN 37902

UNITED STATES PATENT AND TRADEMARK OFFICE

Commissioner for Patents
United States Patent and Trademark Office
P.O. Box 1450
Alexandria, VA 22313-1450
www.uspto.gov

DENNIS H. RAINEAR
CHIEF PATENT COUNSEL, ETHYL CORPORATION
330 SOUTH FOURTH STREET
RICHMOND VA 23219

COPY MAILED

JUL 15 2004

OFFICE OF PETITIONS

In re Application of :
Iyer et al. : DECISION ON PETITION
Application No. 10/788,734 :
Filed: February 27, 2004 :
Attorney Docket No. EI7617 :

This is a decision on the petition filed June 11, 2004, requesting that the above-identified application be accorded a filing date of February 27, 2004.

On February 27, 2004, applicants deposited the above-identified application. However, on May 24, 2004, the Office of Initial Patent Examination mailed a "Notice Of Incomplete Application" requiring drawings of applicants' invention and stating that the filing date would be the date of receipt of the omitted drawings. It is noted that the specification filed on February 27, 2004, described drawings containing Figures 1-2, but no drawings were filed on February 27, 2004.

On June 11, 2004, applicants filed the present petition and a $130.00 petition fee, requesting that the above-identified application be accorded a filing date of February 27, 2004. Applicants admitted that the application was deposited without drawings on February 27, 2004. However, applicants asserted that the drawing Figures 1-2 did not add new matter to the application.

As stated in MPEP § 601.01(f), it is the practice of the United States Patent and Trademark Office (Office) to treat an application that contains at least one process or method claim as an application for which a drawing is <u>not</u> necessary for an understanding of the invention under 35 U.S.C. 113 (first sentence).

MPEP § 601.01(f) also states that:

> A nonprovisional application having at least one claim, or a provisional application having at least some disclosure, directed to the subject matter discussed above for which a drawing is usually not considered essential for a filing date, describing drawing figure(s) in the specification, but filed without drawings will be treated as an application filed without all of the drawing figures referred to in the specification as discussed in MPEP § 601.01(g), so long as the application contains something that can be construed as a written description and the names of all the inventors.

This application contains method claims. Therefore, the application should have been treated as an application filed without all of the drawing figures referred to in the specification as discussed in MPEP § 601.01(g).

MPEP § 601.01(g) states that if an application is filed without all of the drawing figure(s) referred to in the specification, a "Notice of Omitted Item(s)" is mailed indicating that the application has been accorded a filing date, but is lacking some of the figures of drawings described in the specification. In view of the above, the requirement for drawings as set forth in the "Notice of Incomplete Application" of May 24, 2004, was mailed in error and is hereby withdrawn.

The application will be accorded a filing date of February 27, 2004, because drawings were not necessary to obtain a filing date. Accordingly, the petition is **granted**. The application will be accorded a filing date of February 27, 2004, without any drawings.

The issue of new matter is a determination for the examiner. Applicants may wish to file an amendment requesting entry of Figures 1-2.

The $130.00 petition fee is unnecessary and will be refunded by to Deposit Account No. 05-1372.

The Office of Initial Patent Examination is directed to accord the above-identified application a filing date of February 27, 2004, without any drawings, and to mail a corrected filing receipt.

Any inquiries related to this decision should be directed to the undersigned at (703) 306-5589.

Christina Tartera Donnell

Christina Tartera Donnell
Senior Petitions Attorney
Office of Petitions

UNITED STATES PATENT AND TRADEMARK OFFICE

Commissioner for Patents
United States Patent and Trademark Office
P.O. Box 1450
Alexandria, VA 22313-1450
www.uspto.gov

Date : February 16, 2007

Patent No. : 7,141,820 B2
Inventor(s) : Lee, et al.
Issued : November 28, 2006
Title : **STRUCTURES WITH PLANAR STRAINED LAYERS**
Docket No. : ASC-012DV

Re: Request for Certificate of Correction

Consideration has been given your request for the issuance of a certificate of correction for the above-identified patent under the provisions of 37 CFR 1.322 and/or 1.323.

Assignees' names and addresses (assignment data) printed in a patent are based *solely* on information supplied in the appropriate space for identifying the assignment data, i.e., item 3 of the Fee(s) Transmittal Form PTOL-85B. After payment of the issue fee, correction of assignment data submitted on the PTOL-85B can only be done by Certificate of Correction under 37 CFR 1.323, with a request under 37 CFR 3.81(b).

A request for a patent to be corrected to state the name of the assignee must:

A. state that the assignment was submitted for recordation as set forth in 37 CFR 3.11 before issuance of the patent;
B. include a request for a certificate of correction under 37 CFR 1.323 along with the fee set forth in 37 CFR 1.20(a); and
C. include the processing fee set forth in 37 CFR 1.17(i).

If the request is granted, Certificates of Correction Branch will be notified that a Certificate of Correction may be issued.

See Manual of Patent Examining Procedure, Section 1481.01 (Rev. 3) (Oct. 2005).

Applicant has not included items A and or C above, accordingly, the request for Certificate of Correction to add or change the assignee data is denied.

Any request under 37 CFR 3.81(b) should be directed to the following address or facsimile number:

By mail: Mail Stop PETITIONS
Commissioner for Patents
Post Office Box 1450
Alexandria, VA 22313-1450

By hand: Customer Service Window
Mail Stop Petitions
Randolph Building
401 Dulany Street
Alexandria, VA 22314

By fax: 571-273-8300
ATTN: Office of Petitions

If a fee (currently $100) was previously submitted for consideration of a Request for Certificate of Correction, under CFR 1.323, to correct assignment data, no additional fee is required.

Elisha Evans
For Cecelia Newman
Decisions & Certificates
of Correction Branch
(703) 308-9390 ext. 110

GOODWIN PROCTER LLP
PATENT ADMINISTRATOR
EXCHANGE PLACE
BOSTON MA 02109-2881

CBN/eme

UNITED STATES PATENT AND TRADEMARK OFFICE

Commissioner for Patents
United States Patent and Trademark Office
P.O. Box 1450
Alexandria, VA 22313-1450
www.uspto.gov

Date : February 16, 2007

Patent No. : 7,141,820 B2
Inventor(s) : Lee, et al.
Issued : November 28, 2006
Title : **STRUCTURES WITH PLANAR STRAINED LAYERS**
Docket No. : ASC-012DV

Re: Request for Certificate of Correction

Consideration has been given your request for the issuance of a certificate of correction for the above-identified patent under the provisions of 37 CFR 1.322 and/or 1.323.

Assignees' names and addresses (assignment data) printed in a patent are based *solely* on information supplied in the appropriate space for identifying the assignment data, i.e., item 3 of the Fee(s) Transmittal Form PTOL-85B. After payment of the issue fee, correction of assignment data submitted on the PTOL-85B can only be done by Certificate of Correction under 37 CFR 1.323, with a request under 37 CFR 3.81(b).

A request for a patent to be corrected to state the name of the assignee must:

A. state that the assignment was submitted for recordation as set forth in 37 CFR 3.11 before issuance of the patent;
B. include a request for a certificate of correction under 37 CFR 1.323 along with the fee set forth in 37 CFR 1.20(a); and
C. include the processing fee set forth in 37 CFR 1.17(i).

If the request is granted, Certificates of Correction Branch will be notified that a Certificate of Correction may be issued.

See Manual of Patent Examining Procedure, Section 1481.01 (Rev. 3) (Oct. 2005).

Applicant has not included items A and or C above, accordingly, the request for Certificate of Correction to add or change the assignee data is denied.

Any request under 37 CFR 3.81(b) should be directed to the following address or facsimile number:

By mail: Mail Stop PETITIONS
Commissioner for Patents
Post Office Box 1450
Alexandria, VA 22313-1450

By hand: Customer Service Window
Mail Stop Petitions
Randolph Building
401 Dulany Street
Alexandria, VA 22314

By fax: 571-273-8300
ATTN: Office of Petitions

If a fee (currently $100) was previously submitted for consideration of a Request for Certificate of Correction, under CFR 1.323, to correct assignment data, no additional fee is required.

Elisha Evans
For Cecelia Newman
Decisions & Certificates
of Correction Branch
(703) 308-9390 ext. 110

GOODWIN PROCTER LLP
PATENT ADMINISTRATOR
EXCHANGE PLACE
BOSTON MA 02109-2881

CBN/eme

UNITED STATES PATENT AND TRADEMARK OFFICE

Commissioner for Patents
United States Patent and Trademark Office
P.O. Box 1450
Alexandria, VA 22313-1450
www.uspto.gov

GOODWIN PROCTER LLP
PATENT ADMINISTRATOR
53 STATE STREET
EXCHANGE PLACE
BOSTON MA 02109-2881

COPY MAILED

AUG 0 3 2009

OFFICE OF PETITIONS

In re Application of :
Lee et al. :
Application No. 10/788,741 :
Filed: February 27, 2004 : DECISION ON PETITION
Patent No.7,141,820 :
Issued: November 28, 2006 :
Attorney Docket No. ASC-012DV :

This is a decision on the petition under 37 CFR 3.81(b)[1] filed December 4, 2008 to correct the name of the assignee on the front page of the above-identified patent by way of a Certificate of Correction.

The request is **GRANTED**.

Petitioner indicates that the correct assignee is Massachusetts Institute of Technology. Accordingly, petitioner requests that a certificate of correction be issued to reflect the correct assignee.

37 CFR 3.81(b), effective June 25, 2004, reads:

> *After payment of the issue fee:* Any request for issuance of an application in the name of the assignee submitted after the date of payment of the issue fee, and any request for a patent to be corrected to state the name of the assignee, must state that the assignment was submitted for recordation as set forth in § 3.11 before issuance of the patent, and must include a request for a certificate of correction under § 1.323 of this chapter (accompanied by the fee set forth in § 1.20(a) and the processing fee set forth in § 1.17(i) of this chapter.

The request was accompanied by a request for certificate of correction and the processing fee set forth in § 1.17(i), as required by 3.81(b). The certificate of correction fee set forth in § 1.20(a)

[1] *See* MPEP 1309, subsection II; and Official Gazette of June 22, 2004.

($100.00) was previously paid. Further, Office assignment records reflect that Massachusetts Institute of Technology is the assignee of record, which assignment was submitted for recordation as set forth in § 3.11 before issuance of the patent. Accordingly, as the request complies with the provisions of 37 CFR 3.81(b), it would be appropriate for a certificate of correction to be processed after issuance of this application into a patent.

Telephone inquiries concerning this decision should be directed to Christopher Bottorff at (571) 272-6692. Inquiries regarding the issuance of a certificate of correction should be directed to the Certificate of Correction Branch at (571) 272-4200.

The Certificates of Correction Branch will be notified of this decision granting the petition under 37 CFR 3.81(b) and directing issuance of the requested Certificate of Correction.

Christopher Bottorff
Petitions Examiner
Office of Petitions

UNITED STATES PATENT AND TRADEMARK OFFICE

Commissioner for Patents
United States Patent and Trademark Office
P.O. Box 1450
Alexandria, VA 22313-1450
www.uspto.gov

COPY MAILED

FEB 0 5 2008

OFFICE OF PETITIONS

INTERVET INC
PATENT DEPARTMENT
PO BOX 318
MILLSBORO DE 19966-0318

In re Application :
Weston, et al. :
Application No. 10/788,746 : DECISION ON APPLICATION
Filed: February 26, 2004 : FOR PATENT TERM ADJUSTMENT
Atty Docket No. 1-1998.376 US D1 :

This is a decision on the "REQUEST FOR RECONSIDERATION OF PATENT TERM ADJUSTMENT UNDER 37 C.F.R. § 1.705(b)", filed October 19, 2007. Applicants request that the initial determination of patent term adjustment under 35 U.S.C. 154(b) be increased from the currently accorded one hundred fifty-eight (158) days to two hundred (200) days.

For the reasons set forth below, a decision on the request for reconsideration of the patent term adjustment indicated on the patent is being **HELD IN ABEYANCE** until after the actual patent date.

Patentees are given TWO (2) MONTHS from the issue date of the patent to file a written request for reconsideration of the patent term adjustment for Office failure to issue the patent within 3 years. A copy of this decision should accompany the request. Patentees may seek such consideration without payment of an additional fee. However, as to all other bases for seeking reconsideration of the patent term adjustment indicated in the patent, all requirements of § 1.705(d) must be met. Requests for reconsideration on other bases must be timely filed and must include payment of the required fee.

On July 20, 2007, the Office mailed the Determination of Patent Term Adjustment under 35 U.S.C. 154(b) in the above-identified application. The Notice stated that the patent term adjustment (PTA) to date is one hundred fifty-eight (158) days. On October 19, 2007, Applicants timely[1] submitted the instant application for patent term adjustment.

Applicants state that the patent issuing from the application is not subject to a terminal disclaimer.

The Office initially determined a patent term adjustment of one hundred fifty-eight (158) days based on an adjustment of two hundred ninety-five (295) days of PTO delay pursuant to 35 U.S.C. 154(b)(1)(A)(i) and 37 C.F.R. § 1.703(a)(1), reduced by applicants' delays of sixty-one (61) and twenty-nine (29) days pursuant to 37 C.F.R § 1.704(b), and forty-seven (47) days pursuant to 37 C.F.R. 1.704(c)(8). All periods of adjustment have been reviewed and found to be correct.

However, applicants assert additional PTO delay for the failure on the part of the Office to issue the patent within three years of its filing. The Office will be able to assess whether or not any additional PTA is accorded once the issue date is established.[2]

In view thereof, the correct determination of patent term adjustment at the time of the mailing of the Notice of Allowance is **one hundred fifty-eight (158)** (295 days of PTO delay, reduced by 137 days of applicant delay).

The $200 fee set forth in 37 C.F.R. § 1.18(e) has been charged to Deposit Account No. 02-2334, as authorized.

The application is being forwarded to the Office of Patent Publication for processing into a patent.

---

[1] Applicant filed the application for patent term adjustment together with the payment of the issue fee.

[2] Applicant should note that if an application is entitled to an adjustment under 35 U.S.C. 154(b)(1)(B), the entire period of pendency before the Office except for periods excluded under 35 U.S.C. (b)(1)(B)(i)-(iii), and not just the period beginning three years after the actual filing date of the application, is the period of delay under 35 U.S.C. 154(b)(1)(B) in determining whether periods of delay overlap under 35 U.S.C. 154(b)(2)(A).

Telephone inquiries specific to this matter should be directed to Cliff Congo, Petitions Attorney, at (571)272-3207.

Nancy Johnson
Senior Petitions Attorney
Office of Petitions

UNITED STATES PATENT AND TRADEMARK OFFICE

Commissioner for Patents
United States Patent and Trademark Office
P.O. Box 1450
Alexandria, VA 22313-1450
www.uspto.gov

COPY MAILED

MAR 07 2007

OFFICE OF PETITIONS

DLA PIPER US LLP
4365 EXECUTIVE DRIVE
SUITE 1100
SAN DIEGO CA 92121-2133

In re Application of
Kenneth W. Carpenter et al
Application No. 10/788,747
Filed: February 26, 2004
Attorney Docket No. MEDIV2020-2

: DECISION ON PETITION
: UNDER 37 CFR 1.78(a)(3) AND
: UNDER 37 CFR 1.78(a)(6)

This is a decision on the petition under 37 CFR 1.78(a)(3) and 1.78(a)(6), filed October 31, 2006, to accept an unintentionally delayed claim under 35 U.S.C. §§ 120 and 119(e) for benefit of priority to the prior-filed applications set forth in the concurrently filed amendment.

The petition is **DISMISSED**.

A petition for acceptance of a claim for late priority under 37 CFR 1.78(a)(3) is only applicable to those applications filed on or after November 29, 2000. Further, the petition is appropriate only after the expiration of the period specified in 37 CFR 1.78(a)(2)(ii). In addition, the petition under 37 CFR 1.78(a)(3) must be accompanied by:

> **(1)** the reference required by 35 U.S.C. § 120 and 37 CFR 1.78(a)(2)(i) of the prior-filed application, unless previously submitted;[1]
> **(2)** the surcharge set forth in § 1.17(t); and
> **(3)** a statement that the entire delay between the date the claim was due under 37 CFR 1.78(a)(2)(ii) and the date the claim was filed was unintentional. The Commissioner may require additional information where there is a question whether the delay was unintentional.

---

[1] Any nonprovisional application or international application designating the United States of America claiming the benefit of one or more prior-filed copending applications or international applications designating the United States of America must contain or be amended to contain a reference (amendment to the first line of the specification following the title or in an application data sheet (ADS)) to each such prior-filed application, identifying it by application number (consisting of the series code and serial number) or international application number and international filing date filing date and indicating the relationship of the applications. Cross references to other related applications may be made when appropriate (*see* § 1.14).

The instant application was filed on February 26, 2004 and was pending at the time of filing of the instant petition.

The reference to the prior-filed application was not included in the manner specified in 37 CFR 1.78(a)(2)(i) (i.e., in an ADS or in an amendment to the first sentence following the title of the specification) or filed within the period specified in 37 CFR 1.78(a)(2)(ii).

As to the benefit claim under 37 CFR 1.78(a)(6):

A petition under 37 CFR 1.78(a)(6) is only applicable to those applications filed on or after November 29, 2000. Further, the petition is appropriate only after expiration of the period specified in 37 CFR 1.78(a)(5)(ii) and must be filed during the pendency of the nonprovisional application. In addition, the petition must be accompanied by:

> (1) the surcharge set forth in 37 CFR 1.17(t);
>
> (2) a statement that the entire delay between the date the claim was due under 37 CFR 1.78(a)(5)(ii) and the date the claim was filed was unintentional; and
>
> (3) the reference to the prior filed provisional application supplied in an application data sheet (ADS)37 CFR 1.76) or as an amendment in the first sentence of the specification following the title. See 35 U.S.C. §119(e) and 37 CFR 1.78(a)(5)(i). The Commissioner may require additional information where there is a question whether the delay was unintentional.

The reference to the above-noted, prior-filed provisional applications was not included in the manner specified in 37 CFR 1.78(a)(5)(i) (i.e., in an ADS or in an amendment to the first sentence following the title of the specification) or filed within the period specified in 37 CFR 1.78(a)(5)(ii).

A reference to add the prior-filed applications on page one following the first sentence of the specification has been included in an amendment filed on October 31, 2006. However, the amendment is not acceptable as drafted since it improperly incorporates by reference the prior-filed Application No. 10/362,848. Petitioner's attention is directed to Dart Industries v. Banner, 636 F.2d 684, 207 USPQ 273 (C.A.D.C. 1980), where the court drew a distinction between a permissible 35 U.S.C. § 120 statement and the impermissible introduction of new matter by way of incorporation by reference in a 35 U.S.C. § 120 statement. The court specifically stated:

> Section 120 merely provides a mechanism whereby an application becomes entitled to benefit of the filing date of an earlier application disclosing the same subject matter. Common subject matter must be disclosed, in both applications, either specifically or by an express incorporation-by-reference of prior disclosed subject matter. Nothing in section 120 itself operates to carry forward any disclosure from an earlier application. In re deSeversky, supra at 674, 177 USPQ at 146-147. Section 120 contains no magical disclosure-augmenting powers able to pierce new matter barriers. It cannot, therefore, "limit" the absolute and express prohibition against new matter contained in section 251.

Accordingly, before the petition under 37 CFR 1.78(a)(3) and 37 CFR 1.78(a)(6) can be granted, a substitute amendment deleting the incorporation by reference statement for Application No. 10/362,848 is required.

Further correspondence with respect to this matter should be addressed as follows:

By mail: Mail Stop PETITIONS
Commissioner for Patents
Post Office Box 1450
Alexandria, VA 22313-1450

By hand: Customer Window located at:

Randolph Building
401 Dulany Street
Alexandria, VA 22314

By fax: (571) 273-8300
ATTN: Office of Petitions

Telephone inquiries concerning this decision should be directed to the undersigned at (571) 272-3208.

Karen Creasy
Petitions Examiner
Office of Petitions

UNITED STATES PATENT AND TRADEMARK OFFICE

Commissioner for Patents
United States Patent and Trademark Office
P.O. Box 1450
Alexandria, VA 22313-1450
www.uspto.gov

MERCHANT & GOULD P.C.
P.O. BOX 2903
MINNEAPOLIS, MN 55402-0903

COPY MAILED

JUN 23 2005

OFFICE OF PETITIONS

In re Application of :
Chin-Ying Huang :
Application No. 10/788,751 : DECISION ON PETITION
Filed: February 27, 2004 : UNDER 37 CFR 1.78(a)(3)
Attorney Docket No. 12929.1104USC2

This is a decision on the petition under 37 CFR 1.78(a)(3), filed February 23, 2005, to accept an unintentionally delayed claim under 35 U.S.C. § 120 for the benefit of priority to the prior-filed nonprovisional application set forth in the concurrently filed amendment.

The petition is **DISMISSED**.

A petition for acceptance of a claim for late priority under 37 CFR 1.78(a)(3) is only applicable to those applications filed on or after November 29, 2000. Further, the petition is appropriate only after the expiration of the period specified in 37 CFR 1.78(a)(2)(ii). In addition, the petition under 37 CFR 1.78(a)(3) must be accompanied by:

> (1) the reference required by 35 U.S.C. § 120 and 37 CFR 1.78(a)(2)(i) of the prior-filed application, unless previously submitted;
> (2) the surcharge set forth in § 1.17(t); and
> (3) a statement that the entire delay between the date the claim was due under 37 CFR 1.78(a)(2)(ii) and the date the claim was filed was unintentional. The Commissioner may require additional information where there is a question whether the delay was unintentional.

The instant petition does not comply with item (1) above.

The concurrently filed amendment to add the prior-filed application on page one following the first sentence of the specification is not acceptable as drafted since it improperly incorporates by reference the prior-filed application. Petitioner's attention is directed to Dart Industries v. Banner, 636 F.2d 684, 207 USPQ 273 (C.A.D.C. 1980), where the court drew a distinction between a permissible 35 U.S.C. § 120 statement and the impermissible introduction of new matter by way of incorporation by reference in a 35 U.S.C. § 120 statement. The court specifically stated:

> Section 120 merely provides a mechanism whereby an application becomes entitled to benefit of the filing date of an earlier application disclosing the same subject matter. Common subject matter must be disclosed, in both

> applications, either specifically or by an express incorporation-by-reference of prior disclosed subject matter. Nothing in section 120 itself operates to carry forward any disclosure from an earlier application. In re deSeversky, supra at 674, 177 USPQ at 146-147. Section 120 contains no magical disclosure-augmenting powers able to pierce new matter barriers. It cannot, therefore, "limit" the absolute and express prohibition against new matter contained in section 251.

In order for the incorporation by reference statement to be effective as a proper safeguard against the omission of a portion of a prior application, the incorporation by reference statement must be included in the specification-as-filed, or in an amendment specifically referred to in an oath or declaration executing the application. See In re deSeversky, supra. Note also MPEP 201.06(c).

Accordingly, before the petition under 37 CFR 1.78(a)(3) can be granted, a substitute amendment[1] deleting the incorporation by reference statement for application number 09/755,316 along with a renewed petition under 37 CFR 1.78(a)(3), is required.

Further correspondence with respect to this matter should be addressed as follows:

By mail:	Mail Stop PETITIONS Commissioner for Patents Post Office Box 1450 Alexandria, VA 22313-1450
By hand:	Customer Service Window Randolph Building 401 Dulany Street Alexandria, VA 22314
By fax:	(703) 872-9306 ATTN: Office of Petitions

Telephone inquiries concerning this decision should be directed to Irvin Dingle at (571) 272-3210.

Frances Hicks
Petitions Examiner
Office of Petitions
Office of the Deputy Commissioner
for Patent Examination Policy

[1] Note 37 CFR 1.121

UNITED STATES PATENT AND TRADEMARK OFFICE

Commissioner for Patents
United States Patent and Trademark Office
P.O. Box 1450
Alexandria, VA 22313-1450
www.uspto.gov

MERCHANT & GOULD P.C.
P.O. BOX 2903
MINNEAPOLIS, MN 55402-0903

COPY MAILED

OCT 2 7 2005

OFFICE OF PETITIONS

In re Application of :
Chin-Ying Huang :
Application No. 10/788,751 : DECISION ON PETITION
Filed: February 27, 2004 : UNDER 37 CFR 1.78(a)(3)
Attorney Docket No. 12929.1104USC2

This is a decision on the renewed petition under 37 CFR 1.78(a)(3), filed August 23, 2005, to accept an unintentionally delayed claim under 35 U.S.C. § 120 for the benefit of priority to prior-filed nonprovisional Application No. 09/755,316, as set forth in the concurrently filed amendment.

The petition is **GRANTED**.

A petition for acceptance of a claim for late priority under 37 CFR 1.78(a)(3) is only applicable to those applications filed on or after November 29, 2000. Further, the petition is appropriate only after the expiration of the period specified in 37 CFR 1.78(a)(2)(ii). In addition, the petition under 37 CFR 1.78(a)(3) must be accompanied by:

> **(1)** the reference required by 35 U.S.C. § 120 and 37 CFR 1.78(a)(2)(i) of the prior-filed application, unless previously submitted;
> **(2)** the surcharge set forth in § 1.17(t); and
> **(3)** a statement that the entire delay between the date the claim was due under 37 CFR 1.78(a)(2)(ii) and the date the claim was filed was unintentional. The Commissioner may require additional information where there is a question whether the delay was unintentional.

The instant pending application was filed on February 27, 2004, and was pending at the time of filing of the instant petition. A reference to the above-noted prior-filed nonprovisional application has been included in an amendment to the first sentence of the specification following the title as required by 37 CFR 1.78(a)(2)(iii).

The instant nonprovisional application was filed after November 29, 2000, and the claim herein for the benefit of priority to the prior-filed nonprovisional application is submitted after expiration of the period specified in 37 CFR 1.78(a)(2)(ii). Also, the reference to the prior-filed nonprovisional application was submitted during the pendency of the instant nonprovisional

application, for which the claim for benefit of priority is sought. *See* 35 U.S.C. § 120. Accordingly, having found that the instant petition for acceptance of an unintentionally delayed claim for the benefit of priority under 35 U.S.C. § 120 to the prior-filed nonprovisional application satisfies the conditions of 37 CFR 1.78(a)(3), the petition is granted.

The granting of the petition to accept the delayed benefit claim to the prior-filed application under 37 CFR 1.78(a)(3) should not be construed as meaning that the instant application is entitled to the benefit of the prior-filed application. In order for the instant application to be entitled to the benefit of the prior-filed application, all other requirements under 35 U.S.C. § 120 and 37 CFR 1.78(a)(1) and (a)(2) must be met. Similarly, the fact that the corrected Filing Receipt accompanying this decision on petition includes the prior-filed application should not be construed as meaning that applicant is entitled to the claim for benefit of priority to the prior-filed application noted thereon. Accordingly, the examiner will, in due course, consider this benefit claim and determine whether the instant application is entitled to the benefit of the earlier filing date.

Any inquiries concerning this decision may be directed to Irvin Dingle at (571) 272-3210.

This matter is being referred to Technology Center Art Unit 3753.

Frances Hicks
Petitions Examiner
Office of Petitions

Attachment: Corrected Filing Receipt

UNITED STATES PATENT AND TRADEMARK OFFICE

Commissioner for Patents
United States Patent and Trademark Office
P.O. Box 1450
Alexandria, VA 22313-1450
www.uspto.gov

WESTERN DIGITAL TECHNOLOGIES, INC.
ATTN: RENEE M. QUICK
20511 LAKE FOREST DRIVE, E-118H
LAKE FOREST, CA 92630

COPY MAILED

OCT 2 4 2007

OFFICE OF PETITIONS

In re Application of :
Yingjian Chen et al :
Application No. 10/788,765 : DECISION ON PETITION
Filed: February 27, 2004 :
Attorney Docket No. R1850 :

This is a decision on the petition under the unintentional provisions of 37 CFR 1.137(b), filed February 6, 2007, to revive the above-identified application.

The petition is **DISMISSED**.

Any request for reconsideration of this decision must be submitted within TWO (2) MONTHS from the mail date of this decision. Extensions of time under 37 CFR 1.136(a) are permitted. The reconsideration request should include a cover letter entitled "Renewed Petition under 37 CFR 1.137(b)." This is **not** a final agency action within the meaning of 5 U.S.C. § 704.

The application became abandoned for failure to reply in a timely manner to the Notice to File Missing Parts of Nonprovisional Application (Notice), mailed May 19, 2004, which required the submission of an executed oath or declaration and a $130 surcharge fee for its late filing. The Notice set a period for reply of two (2) months from the mail date of the Notice. In reply, on November 5, 2004, the Office received a declaration executed by all the inventors, except for inventor Mohamad T. Krounbi, along with a four (4) month extension of time under the provisions of 37 CFR 1.136(a). On November 16, 2004, the Office mailed a Notice of Incomplete Reply stating that the signature of inventor Mohamad T. Krounbi was missing and that the period for reply remained as set in the Notice of May 19, 2004. No reply was received. Therefore, the application became abandoned on November 20, 2004. A Notice of Abandonment was mailed on March 27, 2006.

A grantable petition under 37 CFR 1.137(b) must be accompanied by: (1) the required reply, unless previously filed; (2) the petition fee as set forth in 37 CFR 1.17(m); (3) a statement that the entire delay in filing the required reply from the due date for the reply until the filing of a grantable petition pursuant to 37 CFR 1.137(b) was unintentional; and (4) any terminal disclaimer (and fee as set forth in 37 CFR 1.20(d)) required by 37 CFR 1.137(d). Where there is a question as to whether either the abandonment or the delay in filing a petition under 37 CFR 1.137 was unintentional, the Director may require additional information. *See* MPEP 711.03(c)(II)(C). The instant petition lacks items (1) and (3).

Turning first to item (1), the petition was accompanied by a declaration executed by inventor Mohamad T. Krounbi only. While the Office did receive a declaration executed by all the other named inventors on November 4, 2004, the declaration submitted with the petition is unacceptable as it fails to comply with 37 CFR 1.63(a)(2) in that the declaration does not list all the named inventors. Petitioner's attention is directed to MPEP Section 602, which states: "Where joint inventors execute separate oaths or declarations, each oath or declaration should make reference to the fact that the affiant is a joint inventor together with the other joint inventors indicating them by name." Accordingly, an executed declaration which lists all the inventors is required to satisfy item (1) above

Lastly, as to item (3) above, as this application has been abandoned for an inordinate period of time, there are three periods to be considered during the evaluation of a petition under 37 CFR 1.137(b):

(1) the delay in reply that originally resulted in the abandonment;

(2) the delay in filing an initial petition pursuant to 37 CFR 1.137(b) to revive the application; and

(3) the delay in filing a grantable petition pursuant to 37 CFR 1.137(b) to revive the application.

Currently, the delay has not been shown to the satisfaction of the Director to be unintentional for periods (1) and (2).

As to Period (1):

The patent statute at 35 U.S.C. § 41(a)(7) authorizes the Director to revive an "unintentionally abandoned application." The legislative history of Public Law 97-247 reveals that the purpose of 35 U.S.C. § 41(a)(7) is to permit the Office to have more discretion than in 35 U.S.C. §§ 133 or 151 to revive abandoned applications in appropriate circumstances, but places a limit on this discretion, stating that "[u]nder this section a petition accompanied by either a fee of $500 or a fee of $50 **would not be granted where the abandonment** or the failure to pay the fee for issuing the patent **was intentional** as opposed to being unintentional or unavoidable." [emphasis added]. See H.R. Rep. No. 542, 97th Cong., 2d Sess. 6-7 (1982), *reprinted in* 1982 U.S.C.C.A.N. 770-71. The revival of an intentionally abandoned application is antithetical to the meaning and intent of the statute and regulation.

35 U.S.C. § 41(a)(7) authorizes the Commissioner to accept a petition "for the revival of an unintentionally abandoned application for a patent." As amended December 1, 1997, 37 CFR 1.137(b)(3) provides that a petition under 37 CFR 1.137(b) must be accompanied by a statement that the delay was unintentional, but provides that "[t]he Commissioner may require additional information where there is a question whether the delay was unintentional." Where, as here, there is a question whether the initial delay was unintentional, the petitioner must meet the burden of establishing that the delay was unintentional within the meaning of 35 U.S.C. § 41(a)(7) and 37 CFR 1.137(b). *See* In re Application of G, 11 USPQ2d 1378, 1380 (Comm'r Pats. 1989); 37 CFR 1.137(b). Here, in view of the inordinate delay (over two years) in resuming prosecution, there is a question whether the entire delay was unintentional. Petitioner should note that the issue is not whether some of the delay was unintentional by any party; rather, the issue is whether the entire delay has been shown to the satisfaction of the Director to be unintentional.

The question under 37 CFR 1.137(b) for period (1) is whether the delay on the part of the party having the right or authority to reply to avoid abandonment (or not reply) was unintentional. Accordingly, any renewed petition must clearly identify the party having the right to reply to avoid abandonment on November 19, 2004, the date the Office received the partial reply and four month extension of time. That party, in turn, must explain what effort(s) was made to provide a complete reply to the outstanding

Office action and further, why a complete reply was not timely filed. If no effort was made to further reply, then that party must explain why the delay in this application does not result from a deliberate course of action (or inaction). Likewise, as the record reflects that Western Digital Technologies, Inc. (hereafter WDT, Inc.), was, and still is, responsible for prosecuting this application, then WDT, Inc. should explain why this application became abandoned while it was under their control and what efforts WDT, Inc. made to further reply of itself and with whom this matter was discussed outside of WDT, Inc. Copies of any correspondence relating to the filing, or to not filing a further reply to the outstanding Office action are required from responsible person(s), WDT, Inc., and whoever else was involved with this application at the time of abandonment. Statements are required from any and all persons then at WDT, Inc., and the responsible person(s) having firsthand knowledge of the circumstances surrounding the lack of the submission of a complete reply to the outstanding Office action. As the courts have made clear, it is pointless for the USPTO to revive a long abandoned application without an adequate showing that the delay did not result from a deliberate course of action. *See* Lawman Armor v. Simon, 2005 U.S. Dist. LEXIS 10843, 74 USPQ2d 1633 (DC EMich 2005); Field Hybrids, LLC v. Toyota Motor Corp., 2005 U.S. Dist. LEXIS 1159 (D. Minn Jan. 27, 2005); Lumenyte Int'l Corp. v. Cable Lite Corp., Nos. 96-1011, 96-1077, 1996 U.S. App. LEXIS 16400, 1996 WL 383927 (Fed. Cir. July 9, 1996) (unpublished) (patents held unenforceable due to a finding of inequitable conduct in submitting an inappropriate statement that the abandonment was unintentional).

As to Period (2):

Likewise, where the applicant deliberately chooses not to seek or persist in seeking the revival of an abandoned application, or where the applicant deliberately chooses to delay seeking the revival of an abandoned application, the resulting delay in seeking revival of the abandoned application cannot be considered as "unintentional" within the meaning of 37 CFR 1.137(b). *See* MPEP 711.03(c).

The language of both 35 U.S.C. § 41(a)(7) and 37 CFR 1.137(b) are clear and unambiguous, and furthermore, without qualification. That is, the delay in filing the reply during prosecution, as well as in filing the petition seeking revival, must have been, without qualification, "unintentional" for the reply to now be

accepted on petition. The Office requires that the entire delay be at least unintentional as a prerequisite to revival of an abandoned application to prevent abuse and injury to the public. *See* H.R. Rep. No. 542, 97th Cong., 2d Sess. 7 (1982), reprinted in 1982 U.S.C.C.A.N. 771 ("[i]n order to prevent abuse and injury to the public the Commissioner . . . could require applicants to act promptly after becoming aware of the abandonment"). The December 1997 change to 37 CFR 1.137 did not create any new right to overcome an intentional delay in seeking revival, or in renewing an attempt at seeking revival, of an abandoned application. *See* Changes to Patent Practice and Procedure; Final Rule Notice, 62 Fed. Reg. 53131, 53160 (October 10, 1997), 1203 Off. Gaz. Pat. Office 63, 87 (October 21, 1997), which clearly stated clear that any protracted delay (here, over two years) could trigger, as here, a request for additional information. As the courts have since made clear, a protracted delay in seeking revival, as here, requires a petitioner's detailed explanation seeking to excuse the delay as opposed to USPTO acceptance of a general allegation of unintentional delay. *See* Lawman Armor v. Simon, 2005 U.S. Dist. LEXIS 10843, 74 USPQ2d 1633, at 1637-8 (DC EMich 2005); Field Hybrids, LLC v. Toyota Motor Corp., 2005 U.S. Dist. LEXIS 1159 (D. Minn Jan. 27, 2005) at *21-*23. Statements are required from any and all persons then at WDT, Inc. and the responsible person(s) having firsthand knowledge of the circumstances surrounding the protracted delay, after the abandonment date, in seeking revival.

Any renewed petition may be addressed as follows:

By Mail:
Mail Stop PETITION
Commissioner for Patents
P. O. Box 1450
Alexandria, VA 22313-1450

By hand:
U. S. Patent and Trademark Office
Customer Service Window, Mail Stop Petitions
Randolph Building
401 Dulany Street
Alexandria, VA 22314

The centralized facsimile number is **(571) 273-8300.**

Telephone inquiries concerning this decision should be directed to the undersigned at (571) 272-3218.

Frances Hicks
Petitions Examiner
Office of Petitions

UNITED STATES PATENT AND TRADEMARK OFFICE

Commissioner for Patents
United States Patent and Trademark Office
P.O. Box 1450
Alexandria, VA 22313-1450
www.uspto.gov

WESTERN DIGITAL TECHNOLOGIES, INC.
ATTN: LESLEY NING
20511 LAKE FOREST DR.
E-118G
LAKE FOREST CA 92630

COPY MAILED

JUL 16 2008

In re Application of	:	
Yingjian Chen et al.	:	
Application No. 10/788,765	:	ON PETITION
Filed: February 27, 2004	:	
Attorney Docket No. R1850	:	

This is a decision on the renewed petition under 37 CFR 1.137(b), filed February 20, 2008, to revive the above-identified application.

The petition is **GRANTED**.

The above-identified application became abandoned for failure to timely reply to the Notice to File Missing Parts of Nonprovisional Application (Notice), mailed May 19, 2004 which set a period for reply of two (2) months. A reply and four (4) month extension of time was received November 5, 2004 but this reply was also incomplete and a Notice of Incomplete Reply was mailed November 16, 2004. No reply was received. Accordingly, by operation of law, the above-identified application became abandoned on November 20, 2004.

The petition decision mailed October 24, 2007 indicates the petition under 37 CFR 1.137(b) filed February 6, 2007 was dismissed as failing to meet the requirements of 37 CFR 1.137(b)(1) and (3).

The renewed petition satisfies the conditions for revival pursuant to the provisions of 37 CFR 1.137(b)(1) and (3). Accordingly, the declaration with all signatures is accepted as having been unintentionally delayed.

Telephone inquiries concerning this decision should be directed to Carl Friedman at (571) 272-6842.

The application file is being referred to the Office of Patent Application Processing.

Carl Friedman
Petitions Examiner
Office of Petitions

UNITED STATES PATENT AND TRADEMARK OFFICE

Commissioner for Patents
United States Patent and Trademark Office
P.O. Box 1450
Alexandria, VA 22313-1450
www.uspto.gov

LOUIS J. HOFFMAN, P.C.
11811 NORTH TATUM BOULEVARD, SUITE 2100
PHOENIX, AZ 85028

COPY MAILED

MAY 0 4 2007

OFFICE OF PETITIONS

In re Application of :
Rodolfo B. Manzone :
Application No. 10/788,772 : ON PETITION
Filed: February 27, 2004 :
Attorney Docket No. 55-AMDIV2 :

This is a decision on the petition filed January 24, 2007 under 37 CFR 1.137(b), to revive the above-identified application.

The petition is **GRANTED.**

The above-identified application became abandoned for failure to submit the Issue fee and Publication fee in a timely manner in reply to the Notice of Allowance mailed September 6, 2006, which set a statutory period for reply of three (3) months. Accordingly, the above-identified application became abandoned on December 7, 2006.

The petition satisfies the conditions for revival pursuant to the provisions of 37 CFR 1.137(b) in that (1) the reply in the form of payment of the Issue fee and Publication fee; (2) the petition fee; and (3) the required statement of unintentional delay have been received. Accordingly, the issue fee is accepted as having been unintentionally delayed.

Telephone inquiries concerning this decision should be directed to the undersigned at (571) 272-3210.

This matter is being referred to the Publishing Division for further processing.

Irvin Dingle
Petitions Examiner
Office of Petitions

UNITED STATES PATENT AND TRADEMARK OFFICE

Commissioner for Patents
United States Patent and Trademark Office
P.O. Box 1450
Alexandria, VA 22313-1450
www.uspto.gov

LAHIVE & COCKFIELD
28 STATE STREET
BOSTON MA 02109

COPY MAILED
AUG 0 9 2006
OFFICE OF PETITIONS

In re Application of :
Donald A. Serino :
Application No. 10/788,783 : DECISION ON PETITION
Filed: February 27, 2004 :
Attorney Docket No. ALS-018 :

This is a decision on the petition under 37 CFR 1.137(b), filed on March 24, 2006, to revive the above-identified application. The petition was recently forwarded to the Office of Petitions for a decision on its merits. The Office apologizes for any inconvenience.

The application became abandoned on December 22, 2005, for failure to file a timely and proper response to the final Office action mailed on September 21, 2005, which set a three (3) month shortened statutory period for reply. On December 21, 2005, petitioner submitted an amendment in response to the final Office action. Upon reviewing the amendment, the examiner mailed an Advisory Action on January 26, 2006, stating that the amendment did not place the application in condition for allowance. On March 24, 2006, petitioner submitted a notice of appeal, a request for an extension of time for response within the third month, and the requisite fees. Unfortunately, the response was untimely because it was submitted beyond the six-month statutory period to reply to the final Office action.[1] Additionally, on March 24, 2006, petitioner filed the present petition to revive the application. On July 24, 2006, the Office mailed a Notice of Abandonment.

Petitioner has met the requirements to revive the above-identified application pursuant to 37 CFR 1.137(b). Petitioner submitted the required reply in the form of a Notice of Appeal and paid the requisite fee. Accordingly, the petition is **granted. Petitioner must file an appeal brief within two months from the mailing date of this decision.**

This matter is being referred to Technology Center Art Unit 2833.

[1] Pursuant to 37 CFR 1.136, a request for an extension of time must be filed prior to the expiration of the maximum period obtainable for reply to avoid abandonment. Accordingly, the $1,020.00 extension of time fee will be credited to petitioner's Deposit Account No. 12-0080.

Telephone inquiries related to this decision may be directed to the undersigned at (571) 272-3211.

Christina Tartera Donnell

Christina Tartera Donnell
Senior Petitions Attorney
Office of Petitions

SPE RESPONSE FOR CERTIFICATE OF CORRECTION

DATE : 3/12/07 **Paper No.:** —

TO SPE OF : ART UNIT 3735

SUBJECT : Request for Certificate of Correction for Appl. No.: 10/788791 Patent No.: 7081086B2

Please respond to this request for a certificate of correction within 7 days.

Please review the requested changes/corrections as shown in the **COCIN** document(s) in the IFW application image. No new matter should be introduced, nor should the scope or meaning of the claims be changed.

Please complete the response (see below) and forward the completed response to scanning using document code **COCX**.

Virginia Tolbert
Certificates of Correction Branch

703-308-9390 ext. 113

Thank You For Your Assistance

The request for issuing the above-identified correction(s) is hereby:
Note your decision on the appropriate box.

- ☐ **Approved** — **All** changes apply.
- ☐ **Approved in Part** — Specify below which changes **do not** apply.
- ☒ **Denied** — State the reasons for denial below.

Comments: the Amendment is not included in the preliminary amendment of 2/27/2004 page 5. The relationship of the specific applications are never set forth in the application. Inclusion would change the scope and meaning of the claims.

SPE — Art Unit 3735

The error is verifiable in the patent application file as follows:

ERROR	APPLICATION FILE
New Paragraph to be added on Title Page --Related U.S.Application Data This application is a continuation of 10/714,189 filed on Nov. 13, 2003,now Pat. No. 7,077,802, which is a continuation of 10/705,989 filed on Nov. 12, 2003, now Pat. No. 7,097,611, which is a continuation of 10/693,577 filed on Oct. 23, 2003, which is a continuation of 10/314,696 filed on Dec. 9, 2002, which is a continuation of 09/953,493 filed on Sep. 14, 2001, now Pat. No. 6,595,912, which is a continuation of 09,952,774 filed on Sep. 14, 2001, now Pat. No. 6,682,979, which is a continuation of 09/952,145, filed Sep. 10, 2001, now abandoned, which is a continuation of 09/952,116 filed on Sep. 10, 2001, now Pat. No. 6,663,558, which is a continuation of 09/952,081 filed on Sep. 10, 2001, now Pat. No. 6,682,474, which is a continuation of 09/952,074 filed on Sep. 10, 2001, now Pat. No. 6,612,978, which is a continuation of 09/951,923 filed on Sep. 10, 2001, now Pat. No. 6,602,184, which claim the benefit of 09/634,043 filed on Aug. 8, 2000, now Pat. No. 6,702,732-- Also, to be added as a paragraph in the Specification, in Column 1, after the title, before the Background Of The Invention.	Preliminary Amendment dated February 27, 2004, page 5, first paragraph and Filing Receipt dated 2/27/04.

UNITED STATES PATENT AND TRADEMARK OFFICE

Commissioner for Patents
United States Patent and Trademark Office
P.O. Box 1450
Alexandria, VA 22313-1450
www.uspto.gov

July 31, 2007

John S. Nagy
FULWIDER PATTON, LLP
6060 Center Drive, 10th Floor
Los Angeles, CA 90045

Patent No: 7081086 B2
Application No: 10/788791
Applicant: Lilip Lau, et al.
Issued: July 25, 2006
Title: **EXPANDABLE CARDIC HARNESS FOR TREATING CONGESTIVE HEART FAILURE**

Request for Certificate Of Correction:

Consideration has been given to your request for the issuance of a certificate of correction for the above- identified patent under the provisions of Rule 1.323.

Inspection of the printed patent, of the above application reveals that the error mentioned in your request is in fact printed in accordance with the record in the Patent and Trademark Office, as passed to issue by the examiner. Per the examiner " **The amendment is not included in the preliminary amendment of 02/27/04 page 5. The relationship of the specific applications are never set forth in the application. Inclusion would change the scope and meaning of the claims".**

In view of the foregoing your request in this matter is hereby **denied**.

Further communication concerning this application should be submitted to the Decisions and Certificate of Correction Branch.

Virginia Tolbert
For Cecelia Newman, Supervisor
Decisions and Certificate of Correction
(703) 308-8309 or (703) 308-9390 ext. 113

vt

UNITED STATES DEPARTMENT OF COMMERCE
COMMISSIONER FOR PATENTS
P. O. BOX 1450
ALEXANDRIA, VA 22313-1450

Date : 8/11/2009
Patent No. : 7,353,084 B2
Serial No. : 10/788,814
Inventor(s) : Schaper et al.
Issue Date : April 1, 2008
Title : **GENERATOR CONTROLLER**
Doc./File No. : **ACUT-1-1002**

Re: Certificate of Correction (Reconsideration)

Consideration has been given your request for a certificate of correction (reconsideration), for the above-identified patent under the provisions of Rule 1.322 and 1.323.

Respecting the alleged error(s) in your request, Your request cannot be processed, you must provide the office a cover letter and instructions on the SB44/PTOL-1050 requesting the alleged errors(s) and location of alleged error(s) to be considered for correction. No correction is in order here.

In view of the foregoing, your request in this matter is denied.

Further consideration will be given concerning this matter upon receipt of a request for **Reconsideration** (reconsideration should be accompanied by supporting document(s) such as, amendment, postcard receipt, 1449/892, etc.) and should be filed and directed to Decisions & Certificates of Correction Branch.

Ernest C. White, *LIE* (703) 756-1590
Mary F. Diggs, *Supervisor* (703) 756-1580
Decisions & Certificates of Correction Branch

BLACK LOWE & GRAHAM, PLLC
701 FIFTH AVENUE
SUITE 4800
SEATTLE WA 98104

ecw

UNITED STATES PATENT AND TRADEMARK OFFICE

UNITED STATES DEPARTMENT OF COMMERCE
United States Patent and Trademark Office
Address: COMMISSIONER FOR PATENTS
P.O. Box 1450
Alexandria, Virginia 22313-1450
www.uspto.gov

Docket Administrator - Room 3D-201E
Alcatel-Lucent USA Inc.
600-700 Mountain Avenue
Murray Hill, NJ 07974

Mail Date: 08/04/2010

Applicant	: Iraj Saniee	: DECISION ON REQUEST FOR
Patent Number	: 7653042	: RECALCULATION of PATENT
Issue Date	: 01/26/2010	: TERM ADJUSTMENT IN VIEW
Application No	: 10/788,824	: OF WYETH AND NOTICE OF INTENT TO
Filed	: 02/27/2004	: ISSUE CERTIFICATE OF CORRECTION
		:

The Request for Recalculation is **GRANTED** to the extent indicated.

The patent term adjustment has been determined to be **1022** days. The USPTO will *sua sponte* issue a certificate of correction reflecting the amount of PTA days determined by the recalculation.

Prior to the issuance of the certificate of correction, the USPTO will afford patentee an opportunity to be heard and request reconsideration. Accordingly, patentee has **one month or thirty (30) days**, whichever is longer, to file a request for reconsideration of this patent term adjustment calculation. See 35 U.S.C. 154(b)(3)(B)(ii) and 37 CFR 1.322(a)(4). No extensions of time will be granted under 37 CFR 1.136.

Patentee should use document code PET.OP if electronically filing a request for reconsideration of this patent term adjustment calculation. The patentee must also include the information required by 37 CFR 1.705(b)(2) and the fee required by 37 CFR 1.18(e). If patentee does not file a timely request for reconsideration of this patent term adjustment calculation including the information required by 37 CFR 1.705(b)(2) and the fee required by 37 CFR 1.18(e), the USPTO will issue a certificate of correction reflecting the PTA determination noted above.

Patentee should be aware that in order to preserve the right to review in the United States District Court for the District of Columbia of the USPTO patent term adjustment determination, patentee must ensure that he or she also take the steps required under 35 U.S.C. 154(b)(4)(A) in a timely manner. Nothing in the request for recalculation should be construed as providing an alternative time frame for commencing a civil action under 35 U.S.C. 154(b)(4)(A).

Any questions concerning this decision should be directed to the Office of Patent Legal Administration at 571-272-7702.

UNITED STATES PATENT AND TRADEMARK OFFICE

Commissioner for Patents
United States Patent and Trademark Office
P.O. Box 1450
Alexandria, VA 22313-1450
www.uspto.gov

STEPHEN B DAVIS
BRISTOL-MYERS SQUIBB COMPANY
PATENT DEPARTMENT
P O BOX 4000
PRINCETON NJ 08543-4000

COPY MAILED

JUL 22 2004

OFFICE OF PETITIONS

In re Application of	:	
Shen, et al.	:	
Application No. 10/788,825	:	DECISION GRANTING PETITION
Filed: February 27, 2004	:	
Attorney Docket No. LA0100(NP)	:	

This is a decision on the "SUPPLEMENTAL REPLY TO THE NOTICE OF INCOMPLETE NONPROVISIONAL APPLICATION", filed June 17, 2004, which is being treated as a petition under 37 CFR 1.53 to accord the above-identified application a filing date of February 27, 2004.

The application was deposited on February 27, 2004. However, on May 20, 2004, the Office of Initial Patent Examination mailed a "Notice of Incomplete Nonprovisional Application", stating that the application had not been accorded a filing date because the application was deposited without drawings.

As stated in MPEP § 601.01(f), it is the practice of the PTO to treat an application that contains at least one process or method claim as an application for which a drawing is not necessary for an understanding of the invention under 35 U.S.C. 113 (first sentence).

MPEP § 601.01(f) also states that:

> A nonprovisional application having at least one claim, or a provisional application having at least some disclosure, directed to the subject matter discussed above for which a drawing is usually not considered essential for a filing date, describing drawing figure(s) in the specification, but filed without drawings will be treated as an application filed without all of the drawing figures referred to in the specification as discussed in MPEP § 601.01(g), so long as the application contains something that can be construed as a written description.

This instant application contains method claims.

Therefore, the application should have been treated as an application filed without all of the drawing figures referred to in the specification as discussed in MPEP § 601.01(g).

In view of the above, the petition is **GRANTED**.

The "Notice of Incomplete Nonprovisional Application", mailed May 20, 2004, was mailed in error and is hereby **VACATED**.

The above-identified application is accorded a filing date of February 27, 2004, as requested in the petition.

Given the basis for granting this petition, no petition fee has been charged.

The application is being forwarded to the Office of Initial Patent Examination (OIPE) for further processing with a filing date of February 27, 2004, using the application papers received in the Office on that date and for indication on the file wrapper label to show that "0" sheets of drawings were present on filing.

Telephone inquiries specific to this decision may be directed to Petitions Attorney Cliff Congo at (703) 305-0272.

Patricia Faison-Ball
for

Charles Pearson
Director
Office of Petitions

UNITED STATES PATENT AND TRADEMARK OFFICE

Commissioner for Patents
United States Patent and Trademark Office
P.O. Box 1450
Alexandria, VA 22313-1450
www.uspto.gov

LOCKE LIDDELL & SAPP LLP
600 TRAVIS
3400 CHASE TOWER
HOUSTON, TX 77002-3095

COPY MAILED

DEC 26 2006

OFFICE OF PETITIONS

In re Application of	:	
Dewayne Turner et al	:	
Application No. 10/788,833	:	DECISION DISMISSING PETITION
Filed: February 27, 2004	:	UNDER 37 CFR 1.313(c)(2)
Attorney Docket No. 020569-05007	:	

This is a decision on the petition under 37 CFR 1.313(c)(2), filed December 22, 2006, to withdraw the above-identified application from issue after payment of the issue fee.

The petition is **DISMISSED AS MOOT**.

Unfortunately, the petition was not received within sufficient time to effect the withdrawal of this application from issue prior to the scheduled issue date of December 26, 2006. Therefore, as the case has now issued, the petition to withdraw from issue cannot now be granted.

Petitioner's attention is directed to 37 CFR 1.313(d), which states:

> A petition under this section will not be effective to withdraw the application from issue unless it is actually received and granted by the appropriate officials **before the date of issue**. (Emphasis added)

The request for continued examination (RCE) filed concurrently with the petition is improper in view of the issuance of this application into a patent and will not be processed. Accordingly, the $790 filing fee and the $130 petition fee submitted are unnecessary and will be refunded in due course.

Telephone inquiries should be directed to the undersigned at (571) 272-3218.

Frances Hicks
Petitions Examiner
Office of Petitions

UNITED STATES PATENT AND TRADEMARK OFFICE

Commissioner for Patents
United States Patent and Trademark Office
P.O. Box 1450
Alexandria, VA 22313-1450
www.uspto.gov

MINTZ, LEVIN, COHN, FERRIS,
GLOVSKY AND POPEO, P.C
ONE FINANCIAL CENTER
BOSTON MA 02111

MAILED

JUN 2 4 2010

OFFICE OF PETITIONS

In re Application of	:	
Nakamura et al.	:	
Application No. 10/788847	:	ON APPLICATION FOR
Filing or 371(c) Date: 02/27/2004	:	PATENT TERM ADJUSTMENT
Atty Docket No.:	:	
25371-021002US	:	

This is in response to the APPLICATION FOR PATENT TERM ADJUSTMENT UNDER 37 C.F.R. § 1.705(b), filed March 15, 2010. Applicant submits that the proper patent term adjustment to be indicated on the patent is 690 days, not 401 days as calculated by the Office as of the mailing of the initial determination of patent term adjustment. Applicant requests this correction solely on the basis that the Office will take in excess of three years to issue this patent. The application for patent term adjustment is properly treated under 37 C.F.R. § 1.705(b).

As the instant application for patent term adjustment requests reconsideration of the patent term adjustment as it relates to the Office's failure to issue the patent within 3 years of the filing date, the application for patent term adjustment under 37 CFR 1.705(b) is **DISMISSED as PREMATURE**.

Knowledge of the actual date the patent issues is required to calculate the amount, if any, of additional patent term patentee is entitled to for Office failure to issue the patent within 3 years. See § 1.702(b). (This is true even where a request for continued examination (RCE) was filed). The computer will not undertake the § 1.702(b) calculation until the actual date of issuance of the patent has been determined. Likewise, the computer will not calculate any further Office delay under § 1.702(a)(4) or applicant delay under § 1.704(c)(10) until the actual date of issuance of the patent has been determined. As such, the Office can not make a determination on the correctness of the patent term adjustment until the patent has issued.

Requesting reconsideration of the patent term adjustment to be indicated on the patent under 37 CFR 1.705(b) based on the initial determination of patent term adjustment and a projected issuance date of the patent (or even the filing date of the request for continued examination) is premature. Accordingly, it is appropriate to dismiss as premature such a request.

Rather than file an application for patent term adjustment under 37 CFR 1.705(b) contesting the 37 CFR 1.702(b) calculation at the time of the mailing of the notice of allowance, applicant is advised that they may wait until the time of the issuance of the patent and file a request for reconsideration of the patent term adjustment pursuant to 37 CFR 1.705(d). As the USPTO does not calculate the amount of time earned pursuant to 37 CFR 1.702(b) until the time of the issuance of the patent, the Office will consider any request for reconsideration of the patent term adjustment due to an error in the calculation of 37 CFR 1.702(b) to be timely if the request for reconsideration is filed within two months of the issuance of the patent. However, as to all other bases for contesting the initial determination of patent term adjustment received with the notice of allowance, applicant must timely file an application for patent term adjustment prior to the payment of the issue fee[1].

The Office acknowledges submission of the $200.00 fee set forth in 37 CFR 1.18(e) for consideration of the application for patent term adjustment under 37 CFR 1.705(b).

Any request for reconsideration of the patent term adjustment indicated on the patent must be timely filed within 2 months after issuance pursuant to 37 CFR 1.705(d) and ***must*** include payment of the required fee under 37 CFR 1.18(e).

The Office of Data Management has been advised of this decision. This application is being referred to the Office of Data Management for issuance of the patent.

Telephone inquiries specific to this decision should be directed to the undersigned at (571) 272-3232.

/Derek L. Woods/

Derek L. Woods
Attorney
Office of Petitions

---

[1] For example, if applicant disputes both the calculation of patent term adjustment under 37 CFR 1.702(a)(1) for Office failure to mail a first Office action or notice of allowance not later than fourteen months after the date on which the application was filed and under 37 CFR 1.702(b) for Office failure to issue a patent within three years of the actual filing date of the application, then applicant must still timely file an application for patent term adjustment prior to the payment of the issue fee to contest the calculation of Office delay in issuing a first Office action or notice of allowance. See 37 CFR 1.705(b) and 35 U.S.C. 154(b)(3)(B). A dispute as to the calculation of the §1.702(a)(1) period raised on request for reconsideration of patent term adjustment under 37 CFR 1.705(d) will be dismissed as untimely filed.

UNITED STATES PATENT AND TRADEMARK OFFICE

Commissioner for Patents
United States Patent and Trademark Office
P.O. Box 1450
Alexandria, VA 22313-1450
www.uspto.gov

MAILED

JUL 13 2010

OFFICE OF PETITIONS

ALBEMARLE CORPORATION
PATENT DEPARTMENT
451 FLORIDA STREET
BATON ROUGE LA 70801

In re Patent No. 7,667,066	:	DECISION ON REQUEST
Vincent J. Gatto et al.	:	FOR
Issue Date: February 23, 2010	:	RECONSIDERATION OF
Application No. 10/788,850	:	PATENT TERM ADJUSTMENT
Filed: February 27, 2004	:	and
Atty Docket No. AN-7421	:	NOTICE OF INTENT TO ISSUE
	:	CERTIFICATE OF CORRECTION

This is a decision on the petition filed on April 23, 2010, which is being treated as a petition under 37 CFR 1.705(d) requesting that the patent term adjustment indicated on the above-identified patent be corrected to indicate that the term of the above-identified patent is extended or adjusted by nineteen hundred seventy-seven (1977) days.

The petition to correct the patent term adjustment indicated on the above-identified patent to indicate that the term of the above-identified patent is extended or adjusted by seven hundred forty-seven (747) days is **GRANTED to the extent indicated herein.**

As the period from the filing date of the request for continued examination (RCE) to the issue date of the patent is not included in the "B" delay period, the over three year period begins on February 28, 2007, and ends on March 11, 2008, the day before the RCE was filed, and is 378 days. See 35 U.S.C. 154(b)(1)(B)(i).

The Office will *sua sponte* issue a certificate of correction. Pursuant to 37 CFR 1.322, the Office will not issue a certificate of correction without first providing assignee or patentee an opportunity to be heard. Accordingly, patentees are given **one (1) month or thirty (30) days**, whichever is longer, from the mail date of this decision to respond. No extensions of time will be granted under § 1.136.

Nothing in this decision shall be construed as a waiver of the requirement of 35 U.S.C. 154(b)(4) that any civil action by an applicant dissatisfied with a determination made by the Director under 35 U.S.C. 154(b)(3) be filed in the United States District Court for the District of Columbia within 180 days after the grant of the patent.

The application is being forwarded to the Certificates of Branch for issuance of a certificate of correction. The Office will issue a certificate of correction indicating that the term of the above-identified patent is extended or adjusted by **seven hundred forty-seven (747)** days.

Telephone inquiries specific to this matter should be directed to the undersigned, at (571) 272-3222.

/Kenya A. McLaughlin/

Kenya A. McLaughlin
Petitions Attorney
Office of Petitions

Enclosure: Copy of DRAFT Certificate of Correction

DRAFT COPY

UNITED STATES PATENT AND TRADEMARK OFFICE

CERTIFICATE OF CORRECTION

PATENT : 7,667,066 B2

DATED : Feb. 23, 2010

INVENTOR(S) : Gatto et al.

It is certified that error appears in the above-identified patent and that said Letters Patent is hereby corrected as shown below:

On the cover page,

[*] Notice: Subject to any disclaimer, the term of this patent is extended or adjusted under 35 USC 154(b) by (369) days

Delete the phrase "by 369 days" and insert – by 747 days--

UNITED STATES PATENT AND TRADEMARK OFFICE

Commissioner for Patents
United States Patent and Trademark Office
P.O. Box 1450
Alexandria, VA 22313-1450
www.uspto.gov

BANNER & WITCOFF LTD
1001 G STREET NW
WASHINGTON DC 20001-4597

COPY MAILED

APR 0 6 2007

OFFICE OF PETITIONS

In re Application	:	
Michael A. Poteet	:	
Application No. 10/788,877	:	DECISION ON APPLICATION
Filed: February 27, 2004	:	FOR PATENT TERM ADJUSTMENT
Atty Docket No. 006417.00002	:	

This is a decision on the "PETITION FOR PATENT TERM ADJUSTMENT" filed November 17, 2006. Applicant requests that the initial determination of patent term adjustment under 35 U.S.C. 154(b) be corrected from seventy-seven (77) days to one hundred twelve (112) days.

The application for patent term adjustment is **DISMISSED**.

On October 6, 2006, the Office mailed the Determination of Patent Term Adjustment under 35 U.S.C. 154(b) in the above-identified application. The Notice stated that the patent term adjustment (PTA) to date is seventy-seven (77) days. On November 17, 2006, Applicant timely[1] submitted the instant application for patent term adjustment, asserting that the correct number of days of PTA at the time of the mailing of the Notice of Allowance is one hundred twelve (112) days. Applicant states that the patent issuing from the application is not subject to a terminal disclaimer.

---

[1] Applicants filed the application for patent term adjustment together with the filing of the issue fee.

The Office initially determined a patent term adjustment of seventy-seven (77) days based on an adjustment for PTO delay of seventy-seven (77) days pursuant to 35 U.S.C. 154(b)(1)(A)(i) and 37 C.F.R. § 1.703(a)(1), reduced by zero (0) days of applicant delay.

Applicant asserts entitlement to a patent term adjustment of one hundred twelve (112) days on the basis that the PTO did not timely mail a response to the Amendment filed on November 29, 2005. While the Office mailed a Notice of Allowance on February 9, 2006, it was withdrawn by the Office *sua sponte* on February 21, 2006. The Office then mailed a non-final Office action on May 3, 2006. Accordingly, Applicant asserts that the PTO should have been assessed delay of thirty-five (35) days, representing the number of days beginning on March 30, 2006 and ending on May 3, 2006.

Applicant's argument has been considered, but is not persuasive. Pursuant to 37 C.F.R. § 1.703(a)(2), the Office had until March 29, 2006 to mail an action under 35 U.S.C. 132 or a Notice of Allowance. The Office did timely mail a Notice of Allowance. While the Notice was withdrawn, it was not vacated.

In view thereof, the correct determination of patent term adjustment at the time of the mailing of the Notice of Allowance is **seventy-seven (77) days** (77 days of PTO delay and 0 days of applicant delay).

The Office acknowledges submission of the $200.00 fee set forth in 37 C.F.R. § 1.18(e).

The application file is being forwarded to the Office of Patent Publication for processing into a patent.

Telephone inquiries specific to this matter should be directed to Cliff Congo, Petitions Attorney, at (571)272-3207.

Nancy Johnson
Senior Petitions Attorney
Office of Petitions

UNITED STATES PATENT AND TRADEMARK OFFICE

Commissioner for Patents
United States Patent and Trademark Office
P.O. Box 1450
Alexandria, VA 22313-1450
www.uspto.gov

JON P. CHRISTENSEN
WELSH & KATZ, LTD.
22ND FLOOR
120 SOUTH RIVERSIDE PLAZA
CHICAGO, IL 60606

COPY MAILED

OCT 2 4 2007

OFFICE OF PETITIONS

In re Application of	:	
Daniel FIAT	:	
Application No. 10/788,878	:	DECISION ON PETITION
Filed: February 27, 2004	:	
Attorney Docket No. 7628-91548	:	

This is a decision on the petition under the unintentional provisions of 37 CFR 1.137(b), filed September 04, 2007, to revive the above-identified application.

The petition is **DISMISSED**.

Any request for reconsideration of this decision must be submitted within TWO (2) MONTHS from the mail date of this decision. Extensions of time under 37 CFR 1.136(a) are permitted. The reconsideration request should include a cover letter entitled "Renewed Petition under 37 CFR 1.137(b)." This is **not** a final agency action within the meaning of 5 U.S.C. § 704.

The application became abandoned for failure to timely file a reply within the meaning of 37 CFR 1.113 to the final Office action of June 08, 2006. The proposed reply required for consideration of a petition to revive must be a Notice of Appeal (and appeal fee required by 37 CFR 41.20(b)(2)), an amendment that *prima facie* places the application in condition for allowance, a Request for Continued Examination (RCE) and submission (37 CFR 1.114), or the filing of a continuing application under 37 CFR 1.53(b). *See* MPEP 711.03(c)(II)(A)(2). Since the amendment submitted does not *prima facie* place the application in condition for allowance, the reply required must be a Notice of Appeal (and appeal fee), RCE, or the filing of a continuing application under 37 CFR 1.53(b). See attached courtesy copy of examiner's advisory action.

A grantable petition under 37 CFR 1.137(b) must be accompanied by: (1) the required reply, unless previously filed; (2) the petition fee as set forth in 37 CFR 1.17(m); (3) a statement that the entire delay in filing the required reply from the due date for the reply until the filing of a grantable petition pursuant to 37 CFR 1.137(b) was unintentional; and (4) any terminal disclaimer (and fee as set forth in 37 CFR 1.20(d)) required by 37 CFR 1.137(d). Where there is a question as to whether either the abandonment or the delay in filing a petition under 37 CFR 1.137 was unintentional, the Director may require additional information. See MPEP 711.03(c)(II)(C) and (D). The instant petition lacks item (1). Petitioner failed to provide a proper response to the office action.

Further correspondence with respect to this matter should be addressed as follows:

By Mail: Mail Stop PETITION
Commissioner for Patents
P. O. Box 1450
Alexandria, VA 22313-1450

By hand: U. S. Patent and Trademark Office
Customer Service Window, Mail Stop Petitions
Randolph Building
401 Dulany Street
Alexandria, VA 22314

The centralized facsimile number is **(571) 273-8300.**

Telephone inquiries concerning this decision should be directed to the undersigned at (571) 272-4231.

Michelle R. Eason
Petitions Examiner
Office of Petitions

Attachment: Courtesy copy of examiners Advisory Action

Advisory Action Before the Filing of an Appeal Brief	**Application No.** 10/788,878	**Applicant(s)** FIAT, DANIEL	
	Examiner Dixomara Vargas	**Art Unit** 2859	

–The MAILING DATE of this communication appears on the cover sheet with the correspondence address –

THE REPLY FILED 04 September 2007 FAILS TO PLACE THIS APPLICATION IN CONDITION FOR ALLOWANCE.

1. ☒ The reply was filed after a final rejection, but prior to or on the same day as filing a Notice of Appeal. To avoid abandonment of this application, applicant must timely file one of the following replies: (1) an amendment, affidavit, or other evidence, which places the application in condition for allowance; (2) a Notice of Appeal (with appeal fee) in compliance with 37 CFR 41.31; or (3) a Request for Continued Examination (RCE) in compliance with 37 CFR 1.114. The reply must be filed within one of the following time periods:
   a) ☐ The period for reply expires _____ months from the mailing date of the final rejection.
   b) ☐ The period for reply expires on: (1) the mailing date of this Advisory Action, or (2) the date set forth in the final rejection, whichever is later. In no event, however, will the statutory period for reply expire later than SIX MONTHS from the mailing date of the final rejection.

   Examiner Note: If box 1 is checked, check either box (a) or (b). ONLY CHECK BOX (b) WHEN THE FIRST REPLY WAS FILED WITHIN TWO MONTHS OF THE FINAL REJECTION. See MPEP 706.07(f).

Extensions of time may be obtained under 37 CFR 1.136(a). The date on which the petition under 37 CFR 1.136(a) and the appropriate extension fee have been filed is the date for purposes of determining the period of extension and the corresponding amount of the fee. The appropriate extension fee under 37 CFR 1.17(a) is calculated from: (1) the expiration date of the shortened statutory period for reply originally set in the final Office action; or (2) as set forth in (b) above, if checked. Any reply received by the Office later than three months after the mailing date of the final rejection, even if timely filed, may reduce any earned patent term adjustment. See 37 CFR 1.704(b).

NOTICE OF APPEAL

2. ☐ The Notice of Appeal was filed on _____. A brief in compliance with 37 CFR 41.37 must be filed within two months of the date of filing the Notice of Appeal (37 CFR 41.37(a)), or any extension thereof (37 CFR 41.37(e)), to avoid dismissal of the appeal. Since a Notice of Appeal has been filed, any reply must be filed within the time period set forth in 37 CFR 41.37(a).

AMENDMENTS

3. ☒ The proposed amendment(s) filed after a final rejection, but prior to the date of filing a brief, will not be entered because
   (a) ☒ They raise new issues that would require further consideration and/or search (see NOTE below);
   (b) ☐ They raise the issue of new matter (see NOTE below);
   (c) ☒ They are not deemed to place the application in better form for appeal by materially reducing or simplifying the issues for appeal; and/or
   (d) ☐ They present additional claims without canceling a corresponding number of finally rejected claims.

   NOTE: *See Continuation Sheet*. (See 37 CFR 1.116 and 41.33(a)).

4. ☐ The amendments are not in compliance with 37 CFR 1.121. See attached Notice of Non-Compliant Amendment (PTOL-324).
5. ☐ Applicant's reply has overcome the following rejection(s): _____.
6. ☐ Newly proposed or amended claim(s) _____ would be allowable if submitted in a separate, timely filed amendment canceling the non-allowable claim(s).
7. ☒ For purposes of appeal, the proposed amendment(s): a) ☒ will not be entered, or b) ☐ will be entered and an explanation of how the new or amended claims would be rejected is provided below or appended.
   The status of the claim(s) is (or will be) as follows:
   Claim(s) allowed: _____.
   Claim(s) objected to: _____.
   Claim(s) rejected: 38-48.
   Claim(s) withdrawn from consideration: _____.

AFFIDAVIT OR OTHER EVIDENCE

8. ☐ The affidavit or other evidence filed after a final action, but before or on the date of filing a Notice of Appeal will not be entered because applicant failed to provide a showing of good and sufficient reasons why the affidavit or other evidence is necessary and was not earlier presented. See 37 CFR 1.116(e).
9. ☐ The affidavit or other evidence filed after the date of filing a Notice of Appeal, but prior to the date of filing a brief, will not be entered because the affidavit or other evidence failed to overcome all rejections under appeal and/or appellant fails to provide a showing a good and sufficient reasons why it is necessary and was not earlier presented. See 37 CFR 41.33(d)(1).
10. ☐ The affidavit or other evidence is entered. An explanation of the status of the claims after entry is below or attached.

REQUEST FOR RECONSIDERATION/OTHER

11. ☐ The request for reconsideration has been considered but does NOT place the application in condition for allowance because: _____.
12. ☐ Note the attached Information Disclosure Statement(s). (PTO/SB/08) Paper No(s). _____
13. ☐ Other: _____.

Continuation Sheet (PTO-303)

Application No. 10/788,878

Continuation of 3. NOTE: The newly added limitations where not present in the claims considered in the Final Rejection filed 06/08/06. Therefore, said limitations need further consideration and search.

UNITED STATES PATENT AND TRADEMARK OFFICE

Commissioner for Patents
United States Patent and Trademark Office
P.O. Box 1450
Alexandria, VA 22313-1450
www.uspto.gov

JON P. CHRISTENSEN
WELSH & KATZ, LTD.
22ND FLOOR
120 SOUTH RIVERSIDE PLAZA
CHICAGO, IL 60606

COPY MAILED

MAY 27 2008

In re Application of :
Daniel FIAT :
Application No. 10/788,878 : DECISION ON PETITION
Filed: February 27, 2004 :
Attorney Docket No. **7628-91548** :

This is a decision on the renewed petition under the unintentional provisions of 37 CFR 1.137(b), filed October 31, 2007, to revive the above-identified application.

The petition is **GRANTED**.

The application became abandoned for failure to timely file a reply within the meaning of 37 CFR 1.113 to the final Office action of June 08, 2006. The proposed reply required for consideration of a petition to revive must be a Notice of Appeal (and appeal fee required by 37 CFR 41.20(b)(2), an amendment that *prima facie* places the application in condition for allowance, a Request for Continued Examination and submission (37 CFR 1.114), or the filing of a continuing application under 37 CFR 1.53(b). See MPEP 711.03(c)(III)(A)(2). No extensions of time pursuant to the provisions of 37 CFR 1.136(a) were obtained. Accordingly, the date of abandonment of this application is September 09, 2006.

The petition satisfies the requirements of 37 CFR 1.137(b) in that petitioner has supplied (1) the reply in the form of a Request for Continued Examination (RCE) and fee of $405.00, and the submission required by 37 CFR 1.114; (2) the petition fee of $750.00; and (3) a proper statement of unintentional delay. Accordingly, the reply to the final Office of June 08, 2006 is accepted as having been unintentionally delayed.

Telephone inquiries concerning this decision should be directed to Michelle R. Eason at (571) 272-4231.

This application is being referred to Technology Center AU 2859 for processing of the RCE and for appropriate action by the Examiner in the normal course of business on the amendment submitted in accordance with 37 CFR 1.114.

Michelle R. Eason
Paralegal Specialist
Office of Petitions

UNITED STATES PATENT AND TRADEMARK OFFICE

Commissioner for Patents
United States Patent and Trademark Office
P.O. Box 1450
Alexandria, VA 22313-1450
www.uspto.gov

TOWNSEND AND TOWNSEND AND CREW LLP
TWO EMBARCADERO CENTER
EIGHTH FLOOR
SAN FRANCISCO, CA 94111-3834

COPY MAILED

MAY 30 2006

OFFICE OF PETITIONS

In re Application of :
Cornelius G Hunter :
Application No. 10/788,898 : DECISION ON PETITION
Filed: February 26, 2004 : TO WITHDRAW
Attorney Docket No. 021973-000100US : FROM RECORD
:

This is a decision on the request to withdraw as attorney or agent of record under 37 C.F.R. § 1.36(b), filed May 31, 2005.

The request is **NOT APPROVED** as moot.

A review of the file record indicates that the power of attorney to Joe Liebeschuetz and the attorneys associated with Customer Number 20350 have been revoked by the assignee of the patent application on June 27, 2005. Accordingly, the request to withdraw under 37 C.F.R. § 1.36(b) is moot.

All future communications from the Office will continue to be directed to the below-listed address until otherwise notified by applicant.

Telephone inquires concerning this decision should be directed to the undersigned at 571-272-3218.

Frances Hicks
Petitions Examiner
Office of Petitions

cc:

Burr & Brown
P O Box 7068
Syracuse, NY 13261-7068

UNITED STATES PATENT AND TRADEMARK OFFICE

Commissioner for Patents
United States Patent and Trademark Office
P.O. Box 1450
Alexandria, VA 22313-1450
www.uspto.gov

THE WEBB LAW FIRM, P.C.
700 KOPPERS BUILDING
436 SEVENTH AVENUE
PITTSBURGH, PA 15219

COPY MAILED

MAR 1 2 2009

OFFICE OF PETITIONS

In re Patent No. 6,982,051 :
Issue Date: January 3, 2006 :
Application No. 10/788,921 : NOTIFICATION UNDER 37 CFR 1.28(C)
Filed: February 26, 2004 :
Attorney Docket No. **4326-032044** :

This is a notice regarding your request for acceptance of a fee deficiency submission under 37 CFR 1.28. On September 1, 1998, the Court of Appeals for the Federal Circuit held that 37 CFR 1.28(c) is the sole provision governing the time for correction of the erroneous payment of the issue fee as a small entity. **See DH Technology v. Synergystex International, Inc. 154 F.3d 1333, 47 USPQ2d 1865 (Fed. Cir. Sept. 1, 1998).**

The Office no longer investigates or rejects original or reissue applications under 37 CFR 1.56. **1098 Off. Gaz. Pat. Office 502 (January 3, 1989).** Therefore, nothing in this Notice is intended to imply that an investigation was done.

Your fee deficiency submission under 37 CFR 1.28 is hereby **ACCEPTED.**

This application is no longer entitled to small entity status. Accordingly, all future fees paid in this application must be paid at the large entity rate.

Inquiries related to this communication should be directed to the undersigned at (571) 272-7253.

Brian W. Brown
Petitions Examiner
Office of Petitions

UNITED STATES PATENT AND TRADEMARK OFFICE

UNITED STATES DEPARTMENT OF COMMERCE
United States Patent and Trademark Office
Address: COMMISSIONER FOR PATENTS
P.O. Box 1450
Alexandria, Virginia 22313-1450
www.uspto.gov

HICKMAN PALERMO TRUONG & BECKER LLP/Yahoo! Inc.
2055 Gateway Place
Suite 550
San Jose, CA 95110-1083

Mail Date: 04/21/2010

Applicant	: Arkady Borkovsky	: DECISION ON REQUEST FOR
Patent Number	: 7672927	: RECALCULATION of PATENT
Issue Date	: 03/02/2010	: TERM ADJUSTMENT IN VIEW
Appliction No	: 10/788,970	: OF WYETH
Filed	: 02/27/2004	:
		:

The Patentee's Request for Recalculation is **DISMISSED.**

This Request is deemed ineligible for consideration for one or more of the following reasons:

(A). The patent for which PTA recalculation is requested is either a design or reissue application or is a reexamination proceeding;

(B). The patent for which PTA recalculation is requested resulted from a utility or plant application filed under 35 USC 111(a) before May 29, 2000 and no CPA filed in the application on/after May 29, 2000;

(C). The patent for which PTA recalculation is requested resulted from an international application in which the international filing date was before May 29, 2000 and no CPA filed in the application on/after May 29, 2000;

(D). The patent for which PTA recalculation is requested issued on/after March 2, 2010;

(E). The Request for Recalculation was filed more than 180 days after the grant date of the patent and the request was not filed within two months of a dismissal of a request for reconsideration of the of the patent term under 37 CFR 1.705(d);

(F). The Request for Recalculation is not solely limited to USPTO pre-Wyeth interpretation of 35 U.S.C. 154(b)(2)(A);

or

(G). A civil action was filed pursuant to 35 U.S.C. 154(b)(4)(A)concerning the same patent at issue in this request.

Patentee may file a reply to this decision dismissing the Request for Recalculation. Patentee must file such reply within one month or thirty days, whichever is longer, of the mail date of the decision dismissing the Request for Recalculation. No fee is required if patentee is asserting in the reply that the dismissal for ineligibility is improper.

Patentee should use document code PET.OP if electronically filing a reply to this dismissal. If the USPTO finds that the request was improperly deemed ineligible, the USPTO will mail applicant a recalculation determination.

Patentee should be aware that in order to preserve the right to review in the United States District Court for the District of Columbia of the USPTO patent term adjustment determination, patentee must ensure that he or she also take the steps required under 35 U.S.C. 154(b)(4)(A). Nothing in the request for recalculation should be construed as providing an alternative time frame for commencing a civil action under 35 U.S.C. 154 (b)(4)(A).

Any questions concerning this decision should be directed to the Office of Patent Legal Administration at 571-272-7702.

UNITED STATES PATENT AND TRADEMARK OFFICE

Commissioner for Patents
United States Patent and Trademark Office
P.O. Box 1450
Alexandria, VA 22313-1450
www.uspto.gov

Paper No.

AVENTIS PHARMA DEUTSCHLAND GMBH
INDUSTRIEPARK HOCHST/BUILDING K801
FRANKFURT AM 65926
GERMANY

COPY MAILED

DEC 1 1 2008

OFFICE OF PETITIONS

In re Patent No. 7,365,084	:	LETTER
Issued: 04/29/2008	:	REGARDING
Application No. 10/788,997	:	PATENT TERM ADJUSTMENT
Filed: February 27, 2004	:	AND
Atty Docket No.	:	NOTICE OF INTENT TO ISSUE
DEAV2003/0081US NP	:	CERTIFICATE OF CORRECTION

This letter is in response to the "LETTER OF GOOD FAITH AND CANDOR REGARDING PATENT TERM UNDER § 37 C.F.R. § 1.705," filed on June 27, 2008. Patentee requests that the Patent Term Adjustment for the above-identified patent be reduced by 123 days from 520 days to 397 days.

The request for reconsideration of the patent term adjustment indicated in the patent is **GRANTED to the extent indicated**.

Patentees are given TWO (2) MONTHS to respond to this decision. No extensions of time will be granted under § 1.136.

The patent term adjustment indicated in the patent is to be corrected by issuance of a certificate of correction showing a revised Patent Term Adjustment of four hundred (400) days.

On April 29, 2008, the above-identified application matured into U.S. Patent No. 7,365,084. The Patent issued with a revised Patent Term Adjustment of 520 days. This revised determination was calculated as follows: The initial determination of PTA of 447 days was increased by 73 days.

Patentee states that the patent term adjustment period should be reduced for the filing, on September 18, 2007, of an amendment after the mailing of a notice of allowance. Patentee states

that the applicant delay is believed to be 152 days, and that a total patent term adjustment period of 397 days, rather than 500 days, is correct.

Patentee states the application is not subject to a terminal disclaimer.

37 CFR 1.704(c)(10) states that circumstances that constitute a failure of the applicant to engage in reasonable efforts to conclude processing or examination of an application also include the following circumstances, which will result in the following reduction of the period of adjustment set forth in § 1.703 to the extent that the periods are not overlapping: Submission of an amendment under § 1.312 or other paper after a notice of allowance has been given or mailed, in which case the period of adjustment set forth in § 1.703 shall be reduced by the lesser of: (i) The number of days, if any, beginning on the date the amendment under § 1.312 or other paper was filed and ending on the mailing date of the Office action or notice in response to the amendment under § 1.312 or such other paper; or (ii) Four months.

On July 26, 2007, a notice of allowance was mailed. On September 18, 2007, an amendment under 37 CFR 1.312 was filed. On March 25, 2008, a response to the amendment under § 1.312 was mailed. As the response to the amendment under § 1.312 was mailed more than four (4) months after the date the amendment under § 1.312 was filed, the period of reduction of patent term adjustment under 37 CFR 1.704 is four (4) months, or 120 days.

In view thereof, the patent term adjustment indicated on the patent should be four hundred (400) days.

As the instant letter was submitted to advise the Office of an error in Patentee's favor, the $200.00 application fee under 37 CFR 1.705(b) was not required, and has not been charged.

The Office thanks Patentees for their good faith and candor in bringing this matter to the attention of the Office.

The application is being referred to the Certificate of Correction Branch for issuance of a certificate of correction to rectify this error. The Office will issue a certificate of

correction indicating that the term of the above-identified patent is extended or adjusted by FOUR HUNDRED (400) days.

Telephone inquiries specific to this matter should be directed to Douglas I. Wood, Senior Petitions Attorney, at (571) 272-3231.

Nancy Johnson
Senior Petitions Attorney
Office of Petitions

Enclosure: Copy of DRAFT Certificate of Correction

UNITED STATES PATENT AND TRADEMARK OFFICE

CERTIFICATE OF CORRECTION

PATENT : 7,365,084 B2

DATED : April 29, 2008

INVENTOR(S) : Christian Stapper et al.

DRAFT

It is certified that error appears in the above-identified patent and that said Letters Patent is hereby corrected as shown below:

On the cover page,

[*] Notice: Subject to any disclaimer, the term of this patent is extended or adjusted under 35 USC 154(b) by (520) days

Delete the phrase "by 520 days" and insert – by 400 days--

UNITED STATES PATENT AND TRADEMARK OFFICE

Commissioner for Patents
United States Patent and Trademark Office
P.O. Box 1450
Alexandria, VA 22313-1450
www.uspto.gov

MYERS DAWES ANDRAS & SHERMAN, LLP
19900 MACARTHUR BLVD.
SUITE 1150
IRVINE CA 92612

COPY MAILED

APR 15 2008

OFFICE OF PETITIONS

In re Application of	:	
Acar et al.	:	
Application No. 10/789,037	:	DECISION ON PETITION
Filed: February 27, 2004	:	
Attorney Docket No. UC1.PAU.48	:	

This is a decision on the petition under the unintentional provisions of 37 CFR 1.137(b), filed March 5, 2008, to revive the above-identified application.

The petition is **GRANTED**.

The petition satisfies the requirements of 37 CFR 1.137(b) in that petitioner has supplied (1) the reply in the form of a Replacement Drawing, (2) the petition fee, and (3) a proper statement of unintentional delay.

Telephone inquiries concerning this decision should be directed to the undersigned at (571) 272-3206.

This matter is being referred to the Office of Data Management for processing into a patent.

Liana Walsh
Petitions Examiner
Office of Petitions

UNITED STATES PATENT AND TRADEMARK OFFICE

COMMISSIONER FOR PATENTS
UNITED STATES PATENT AND TRADEMARK OFFICE
P.O. BOX 1450
ALEXANDRIA, VA 22313-1450
www.uspto.gov

CHARLES W. STEWART
SHELL OIL COMPANY
INTELLECTUAL PROPERTY SERVICES
P.O. BOX 2463
HOUSTON, TX 77252-2463

COPY MAILED

MAY 2 0 2005

OFFICE OF PETITIONS

In re Application of :
Peter Ingraham Chipman et al :
Application No. 10/789,052 :
Filed: February 27, 2004 :
Attorney Docket No. TH-2429 (US) :

ON PETITION

This is a decision on the petition, filed November 12, 2004, which is being treated as a petition under 37 CFR § 1.78(a)(6), to accept an unintentionally delayed claim under 35 U.S.C. § 119(e) for the benefit of the prior-filed provisional application set forth in the concurrently filed amendment.

The petition is **DISMISSED AS MOOT**.

A petition under 37 CFR § 1.78(a)(6) is only applicable to those applications filed on or after November 29, 2000.

Along with the instant petition under 37 CFR § 1.76(a)(6), petitioner has submitted an amendment to the first sentence of the specification following the title to include a reference to the prior-filed application.

The instant pending nonprovisional application was filed on February 27, 2004, and was pending at the time of filing of the instant petition. While a reference to the prior-filed application was not included in an ADS or in the first sentence of the specification following the title, reference nevertheless was made in the transmittal letter filed with the above-identified application.

The current procedure where a claim for priority under 37 CFR § 1.78(a)(6) is not included in the first sentence of the specification or in an ADS but does appear either in the oath or declaration or a transmittal letter filed with the application and the Office notes the claim for priority, no petition will be required to accept a late claim for priority. This is because the application would have been scheduled for publication on the basis of the information concerning the claim submitted elsewhere in the application within the time period set forth in 37 CFR § 1.78(a)(5)(ii). However, on the other hand, if the USPTO does not note the claim for priority to the prior-filed application set forth in the oath or declaration or transmittal letter submitted with the application,

a petition will be required to accept a late claim for priority under 37 CFR § 1.78(a)(6).[1] In the instant case, the Office noted the claim for priority of the prior-filed application in the declaration filed with the application, as shown by its inclusion on the filing receipt.

In view of the above, the $1370 petition fee submitted is unnecessary and will be refunded to petitioner's deposit account in due course.

Any questions concerning this decision on petition may be directed to Irvin Dingle at (571) 272-3210. All other inquiries concerning either the examination procedures or status of the application should be directed to the Technology Center.

This matter is being referred to the Examiner of Technology Center AU 1625 for appropriate action on the amendment filed November 12, 2004.

Frances Hicks
Petitions Examiner
Office of Petitions
Office of the Deputy Commissioner
For Patent Examination Policy

[1] *Note* MPEP 201.11 (III)(D) , pages 200-59 and 200-60 (Rev. 2. May 2004) and 66 Federal Register 67087 at 67089 (Dec. 28, 2001), effective December 28, 2001.

UNITED STATES PATENT AND TRADEMARK OFFICE

UNITED STATES DEPARTMENT OF COMMERCE
United States Patent and Trademark Office
Address: COMMISSIONER FOR PATENTS
P.O. Box 1450
Alexandria, Virginia 22313-1450
www.uspto.gov

MENDELSOHN, DRUCKER, & ASSOCIATES, P.C.
1500 JOHN F. KENNEDY BLVD., SUITE 405
PHILADELPHIA, PA 19102

Mail Date: 05/26/2010

Applicant	: Dennis S. Greywall	: DECISION ON REQUEST FOR
Patent Number	: 7628041	: RECALCULATION of PATENT
Issue Date	: 12/08/2009	: TERM ADJUSTMENT IN VIEW
Application No	: 10/789,074	: OF WYETH AND NOTICE OF INTENT TO
Filed	: 02/27/2004	: ISSUE CERTIFICATE OF CORRECTION
		:

The Request for Recalculation is **GRANTED** to the extent indicated.

The patent term adjustment has been determined to be **1398** days. The USPTO will *sua sponte* issue a certificate of correction reflecting the amount of PTA days determined by the recalculation.

Prior to the issuance of the certificate of correction, the USPTO will afford patentee an opportunity to be heard and request reconsideration. Accordingly, patentee has **one month or thirty (30) days**, whichever is longer, to file a request for reconsideration of this patent term adjustment calculation. See 35 U.S.C. 154(b)(3)(B)(ii) and 37 CFR 1.322(a)(4). No extensions of time will be granted under 37 CFR 1.136.

Patentee should use document code PET.OP if electronically filing a request for reconsideration of this patent term adjustment calculation. The patentee must also include the information required by 37 CFR 1.705(b)(2) and the fee required by 37 CFR 1.18(e). If patentee does not file a timely request for reconsideration of this patent term adjustment calculation including the information required by 37 CFR 1.705(b)(2) and the fee required by 37 CFR 1.18(e), the USPTO will issue a certificate of correction reflecting the PTA determination noted above.

Patentee should be aware that in order to preserve the right to review in the United States District Court for the District of Columbia of the USPTO patent term adjustment determination, patentee must ensure that he or she also take the steps required under 35 U.S.C. 154(b)(4)(A) in a timely manner. Nothing in the request for recalculation should be construed as providing an alternative time frame for commencing a civil action under 35 U.S.C. 154(b)(4)(A).

Any questions concerning this decision should be directed to the Office of Patent Legal Administration at 571-272-7702.

UNITED STATES PATENT AND TRADEMARK OFFICE

Commissioner for Patents
United States Patent and Trademark Office
P.O. Box 1450
Alexandria, VA 22313-1450
www.uspto.gov

Date : December 22, 2006

Patent No. : 7,108,948 B2
Inventor(s) : Tokarski, et al.
Issued : September 19, 2006
Title : **ORGANOPHOTORECEPTOR WITH CHARGE TRANSPORT COMPOSITIONS**
Docket No. : 3216.55US01

Re: Request for Certificate of Correction

Consideration has been given your request for the issuance of a certificate of correction for the above-identified patent under the provisions of 37 CFR 1.322 and/or 1.323.

Assignees' names and addresses (assignment data) printed in a patent are based *solely* on information supplied in the appropriate space for identifying the assignment data, i.e., item 3 of the Fee(s) Transmittal Form PTOL-85B. After payment of the issue fee, correction of assignment data submitted on the PTOL-85B can only be done by Certificate of Correction under 37 CFR 1.323, with a request under 37 CFR 3.81(b).

A request for a patent to be corrected to state the name of the assignee must:

A. state that the assignment was submitted for recordation as set forth in 37 CFR 3.11 before issuance of the patent;
B. include a request for a certificate of correction under 37 CFR 1.323 along with the fee set forth in 37 CFR 1.20(a); and
C. include the processing fee set forth in 37 CFR 1.17(i).

If the request is granted, Certificates of Correction Branch will be notified that a Certificate of Correction may be issued.

See Manual of Patent Examining Procedure, Section 1481.01 (Rev. 3) (Oct. 2005).

Applicant has not included items A and or C above, accordingly, the request for Certificate of Correction to add or change the assignee data is denied.

Any request under 37 CFR 3.81(b) should be directed to the following address or facsimile number:

By mail: Mail Stop PETITIONS
Commissioner for Patents
Post Office Box 1450
Alexandria, VA 22313-1450

By hand: Customer Service Window
Mail Stop Petitions
Randolph Building
401 Dulany Street
Alexandria, VA 22314

By fax: 571-273-8300
ATTN: Office of Petitions

If a fee (currently $100) was previously submitted for consideration of a Request for Certificate of Correction, under CFR 1.323, to correct assignment data, no additional fee is required.

Elisha Evans
For Cecelia Newman
Decisions & Certificates
of Correction Branch
(703) 308-9390 or (703) 308-

PATTERSON, THUENTE, SKAAR & CHRISTENSEN, P.A.
4800 IDS CENTER
80 SOUTH 8TH STREET
MINNEAPOLIS MN 55402-2100

CBN/eme

UNITED STATES PATENT AND TRADEMARK OFFICE

Commissioner for Patents
United States Patent and Trademark Office
P.O. Box 1450
Alexandria, VA 22313-1450
www.uspto.gov

PATTERSON, THUENTE, SKAAR & CHRISTENSEN, P.A.
4800 IDS CENTER
80 SOUTH 8TH STREET
MINNEAPOLIS MN 55402-2100

COPY MAILED

JUL 03 2007

OFFICE OF PETITIONS

In re Patent No. 7,108,948 :
Issued: September 19, 2006 :
Application No. 10/789,077 : ON PETITION
Filed: February 27, 2004 :
Attorney Docket Number: 3216.55US01 :

This is a decision on the petition, filed January 29, 2007, to correct the assignee's name on the front of the Patent, which is being treated as a request under 37 CFR 3.81(b)[1], and in response to the requested certificate of correction filed November 29, 2006, pursuant to 37 CFR 1.323.

The petition under 37 CFR 3.81 is **GRANTED**.

The request for a certificate of correction under 37 CFR 1.323 is **GRANTED**.

Assignment data printed on the patent is based solely on the information so supplied on the Issue Fee Transmittal Form (PTOL-85B). A review of the record indicates that the Issue Fee Transmittal Form (PTOL-85B), submitted July 31, 2006, incorrectly identified the address for the assignee as the Republic of China.

A request for certificate of correction (and fee) as required by 3.81(b) was filed November 29, 2006 and dismissed in a decision mailed December 22, 2006 since the request was not accompanied by a petition under 37 CFR 3.81.

37 CFR 3.81(b), effective June 25, 2004, reads:

> *After payment of the issue fee:* Any request for issuance of an application in the name of the assignee submitted after the date of payment of the issue fee, and any request for a patent to be corrected to state the name of the assignee, must state that the assignment was submitted for recordation as set forth in § 3.11 before issuance of the

---

[1] *See* Official Gazette of June 22, 2004

patent, and must include a request for a certificate of correction under § 1.323 of this chapter (accompanied by the fee set forth in § 1.20(a) and the processing fee set forth in § 1.17(i) of this chapter.

In accordance with the instant request, and as the request agrees with Office assignment records, the assignee information will be corrected on the face of the patent as follows:

Assignee: SAMSUNG ELECTRONICS CO., LTD
KYUNGKI DO, KR

A review of the finance records indicates that the fee for the certificate of correction, paid November 29, 2006 has been properly applied as well as the fee for the instant petition.

This matter is being forwarded to the Certificates of Correction Branch for issuance of the requested Certificate of Correction.

Telephone inquiries concerning this matter may be directed to the undersigned Petitions Attorney at (571) 272-3212

Patricia Faison-Ball

Patricia Faison-Ball
Senior Petitions Attorney
Office of Petitions

UNITED STATES PATENT AND TRADEMARK OFFICE

UNITED STATES DEPARTMENT OF COMMERCE
United States Patent and Trademark Office
Address: COMMISSIONER FOR PATENTS
P.O. Box 1450
Alexandria, Virginia 22313-1450
www.uspto.gov

INTELLECTUAL PROPERTY MANAGEMENT
BOEING MANAGEMENT COMPANY
P.O. BOX 2515
MAIL CODE 110-SD54
SEAL BEACH, CA 90740-1515

Mail Date: 04/20/2010

Applicant	: Robert W. Turner	: DECISION ON REQUEST FOR
Patent Number	: 7657124	: RECALCULATION of PATENT
Issue Date	: 02/02/2010	: TERM ADJUSTMENT IN VIEW
Appliction No	: 10/789,084	: OF WYETH AND NOTICE OF INTENT TO
Filed	: 02/27/2004	: ISSUE CERTIFICATE OF CORRECTION
		:

The Request for Recalculation is **GRANTED** to the extent indicated.

The patent term adjustment has been determined to be **1113** days. The USPTO will *sua sponte* issue a certificate of correction reflecting the amount of PTA days determined by the recalculation.

Prior to the issuance of the certificate of correction, the USPTO will afford patentee an opportunity to be heard and request reconsideration. Accordingly, patentee has **one month or thirty (30) days**, whichever is longer, to file a request for reconsideration of this patent term adjustment calculation. See 35 U.S.C. 154(b)(3)(B)(ii) and 37 CFR 1.322(a)(4). No extensions of time will be granted under 37 CFR 1.136.

Patentee should use document code PET.OP if electronically filing a request for reconsideration of this patent term adjustment calculation. The patentee must also include the information required by 37 CFR 1.705(b)(2) and the fee required by 37 CFR 1.18(e). If patentee does not file a timely request for reconsideration of this patent term adjustment calculation including the information required by 37 CFR 1.705(b)(2) and the fee required by 37 CFR 1.18(e), the USPTO will issue a certificate of correction reflecting the PTA determination noted above.

Patentee should be aware that in order to preserve the right to review in the United States District Court for the District of Columbia of the USPTO patent term adjustment determination, patentee must ensure that he or she also take the steps required under 35 U.S.C. 154(b)(4)(A) in a timely manner. Nothing in the request for recalculation should be construed as providing an alternative time frame for commencing a civil action under 35 U.S.C. 154(b)(4)(A).

Any questions concerning this decision should be directed to the Office of Patent Legal Administration at 571-272-7702.

UNITED STATES PATENT AND TRADEMARK OFFICE

UNITED STATES DEPARTMENT OF COMMERCE
United States Patent and Trademark Office
Address: COMMISSIONER FOR PATENTS
P.O. Box 1450
Alexandria, Virginia 22313-1450
www.uspto.gov

Docket Administrator - Room 3D-201E
Alcatel-Lucent USA Inc.
600-700 Mountain Avenue
Murray Hill, NJ 07974

Mail Date: 04/21/2010

Applicant	: Raafat E. Kamel	: DECISION ON REQUEST FOR
Patent Number	: 7583750	: RECALCULATION of PATENT
Issue Date	: 09/01/2009	: TERM ADJUSTMENT IN VIEW
Appliction No	: 10/789,086	: OF WYETH AND NOTICE OF INTENT TO
Filed	: 02/27/2004	: ISSUE CERTIFICATE OF CORRECTION
		:

The Request for Recalculation is **GRANTED** to the extent indicated.

The patent term adjustment has been determined to be **1465** days. The USPTO will *sua sponte* issue a certificate of correction reflecting the amount of PTA days determined by the recalculation.

Prior to the issuance of the certificate of correction, the USPTO will afford patentee an opportunity to be heard and request reconsideration. Accordingly, patentee has **one month or thirty (30) days**, whichever is longer, to file a request for reconsideration of this patent term adjustment calculation. See 35 U.S.C. 154(b)(3)(B)(ii) and 37 CFR 1.322(a)(4). No extensions of time will be granted under 37 CFR 1.136.

Patentee should use document code PET.OP if electronically filing a request for reconsideration of this patent term adjustment calculation. The patentee must also include the information required by 37 CFR 1.705(b)(2) and the fee required by 37 CFR 1.18(e). If patentee does not file a timely request for reconsideration of this patent term adjustment calculation including the information required by 37 CFR 1.705(b)(2) and the fee required by 37 CFR 1.18(e), the USPTO will issue a certificate of correction reflecting the PTA determination noted above.

Patentee should be aware that in order to preserve the right to review in the United States District Court for the District of Columbia of the USPTO patent term adjustment determination, patentee must ensure that he or she also take the steps required under 35 U.S.C. 154(b)(4)(A) in a timely manner. Nothing in the request for recalculation should be construed as providing an alternative time frame for commencing a civil action under 35 U.S.C. 154(b)(4)(A).

Any questions concerning this decision should be directed to the Office of Patent Legal Administration at 571-272-7702.

UNITED STATES PATENT AND TRADEMARK OFFICE

UNITED STATES DEPARTMENT OF COMMERCE
United States Patent and Trademark Office
Address: COMMISSIONER FOR PATENTS
P.O. Box 1450
Alexandria, Virginia 22313-1450
www.uspto.gov

IBM CORPORATION, T.J. WATSON RESEARCH CENTER
P.O. BOX 218
YORKTOWN HEIGHTS, NY 10598

Mail Date: 04/20/2010

Applicant	: Paul M. Dantzig	: DECISION ON REQUEST FOR
Patent Number	: 7631081	: RECALCULATION of PATENT
Issue Date	: 12/08/2009	: TERM ADJUSTMENT IN VIEW
Appliction No	: 10/789,087	: OF WYETH AND NOTICE OF INTENT TO
Filed	: 02/27/2004	: ISSUE CERTIFICATE OF CORRECTION
		:

The Request for Recalculation is **GRANTED** to the extent indicated.

The patent term adjustment has been determined to be **1167** days. The USPTO will *sua sponte* issue a certificate of correction reflecting the amount of PTA days determined by the recalculation.

Prior to the issuance of the certificate of correction, the USPTO will afford patentee an opportunity to be heard and request reconsideration. Accordingly, patentee has **one month or thirty (30) days**, whichever is longer, to file a request for reconsideration of this patent term adjustment calculation. See 35 U.S.C. 154(b)(3)(B)(ii) and 37 CFR 1.322(a)(4). No extensions of time will be granted under 37 CFR 1.136.

Patentee should use document code PET.OP if electronically filing a request for reconsideration of this patent term adjustment calculation. The patentee must also include the information required by 37 CFR 1.705(b)(2) and the fee required by 37 CFR 1.18(e). If patentee does not file a timely request for reconsideration of this patent term adjustment calculation including the information required by 37 CFR 1.705(b)(2) and the fee required by 37 CFR 1.18(e), the USPTO will issue a certificate of correction reflecting the PTA determination noted above.

Patentee should be aware that in order to preserve the right to review in the United States District Court for the District of Columbia of the USPTO patent term adjustment determination, patentee must ensure that he or she also take the steps required under 35 U.S.C. 154(b)(4)(A) in a timely manner. Nothing in the request for recalculation should be construed as providing an alternative time frame for commencing a civil action under 35 U.S.C. 154(b)(4)(A).

Any questions concerning this decision should be directed to the Office of Patent Legal Administration at 571-272-7702.

UNITED STATES PATENT AND TRADEMARK OFFICE

UNITED STATES DEPARTMENT OF COMMERCE
United States Patent and Trademark Office
Address: COMMISSIONER FOR PATENTS
P.O. Box 1450
Alexandria, Virginia 22313-1450
www.uspto.gov

IBM CORPORATION, T.J. WATSON RESEARCH CENTER
P.O. BOX 218
YORKTOWN HEIGHTS, NY 10598

Mail Date: 05/17/2010

Applicant : Paul M. Dantzig
Patent Number : 7631081
Issue Date : 12/08/2009
Application No: 10/789,087
Filed : 02/27/2004

: NOTICE CONCERNING IMPROPER
: CALCULATION OF PATENT TERM
: ADJUSTMENT BASED UPON USPTO
: IMPROPERLY MEASURING REDUCTION
: PERIOD UNDER 37 CFR 1.704(c)(10).

The United States Patent and Trademark Office (USPTO) discovered that in processing the recent recalculation decisions mailed in response to patentee's filed Request for Recalculation of Patent Term Adjustment in view of Wyeth, the USPTO improperly measured the reduction period for reductions under 37 CFR 1.704(c)(10). Pursuant to 37 CFR 1.704(c)(10), patentee's reduction begins on the date of filing the amendment under 37 CFR 1.312 ("1.312 amendment") or other related paper and ends on the date that the Office mails a response to the filing of the 1.312 amendment or other paper. It has been discovered that during the recalculation, the calculation failed to the limit the reduction to the mail date of the response to the 1.312 amendment or other paper. Accordingly, patentee's reductions were greater than warranted.

This notice **VACATES** the previous GRANTED request for recalculation and provides patentee with a revised GRANTED recalculation.

The patent term adjustment has been determined to be **1248** days. The USPTO will *sua sponte* issue a certificate of correction reflecting the amount of patent term adjustment (PTA) days determined by the recalculation.

Prior to the issuance of the certificate of correction, the USPTO will afford patentee an opportunity to be heard and request reconsideration. Accordingly, patentee has **one month or thirty (30) days** from the mail date of this notice, whichever is longer, to file a request for reconsideration of this PTA calculation. See 35 U.S.C. § 154(b)(3)(B)(ii) and 37 CFR 1.322(a)(4).

Patentee should use document code PET.OP if electronically filing a request for reconsideration of this PTA calculation. The patentee must also include the information required by 37 CFR 1.705(b)(2), and the fee required by 37 CFR 1.18(e). If patentee does not file a timely request for reconsideration of this PTA calculation, including the information required by 37 CFR 1.705(b)(2) and the fee required by 37 CFR 1.18(e), the USPTO will issue a certificate of correction reflecting the PTA determination noted above.

Patentee should be aware that in order to preserve the right of review of the USPTO's PTA determination in the United States District Court for the District of Columbia, patentee must ensure that the steps required under 35 U.S.C. § 154 (b)(4) are taken in a timely manner. Nothing in the request for recalculation should be construed as providing an alternative time frame for commencing a civil action under 35 U.S.C. § 154(b)(4).

23 SEP 2005

UNITED STATES PATENT AND TRADEMARK OFFICE

Commissioner for Patents
United States Patent and Trademark Office
P.O. Box 1450
Alexandria, VA 22313-1450
www.uspto.gov

Francis Law Group
1942 Embarcadero
Oakland CA 94606

In re Application of	:	
Roberts, Claire et al.	:	
Application No.: 10/789,105	:	DECISION ON
Filing Date: 27 February 2004	:	
Attorney Docket No.: LP-02-019	:	PETITION
For: REGULATION OF CYTOTROPHOBLAST CELL DIFFERENTIATION AND CELL MIGRATION	:	UNDER 37 CFR 1.182

This decision is in response to applicants' "Petition to Accord 35 U.S.C. §371 Filing Status," filed on 12 September 2005. It has been treated as a petition under 37 CFR 1.182.

BACKGROUND

On 30 August 2002, applicants filed international application PCT/AU02/01226, which claimed a priority date of 30 August 2001. Accordingly, the thirty-month period for paying the basic national fee in the United States expired at midnight on 01 March 2004 (29 February 2004 was a Sunday).

On 27 February 2004, applicants filed utility patent application transmittal, which was accompanied by, *inter alia*, utility filing fee, a specification and a preliminary amendment.

On 25 May 2004, the Office mailed a Notification to File Missing Parts and a Notice Regarding Benefit/Priority Claim(s).

On 12 September 2005, applicants filed the instant petition to convert.

DISCUSSION

This decision is in response to applicants' petition filed on 12 September 2005, requesting to convert the above-captioned application to a national stage application of PCT/AU02/01226.

Further, a review of the above-captioned application file verifies that it was properly filed under 35 U.S.C. 111(a). The USPTO Notice published in the Official Gazette at 1077 OG 13 entitled "Minimum Requirements for Acceptance of Applications Under 35 U.S.C. 371 (the National Stage of PCT)" states, in part, the following:

> The Patent and Trademark Office is continuing to receive application papers which do not clearly identify whether the papers (1) are being submitted to enter the national stage of the Patent Cooperation Treaty (PCT) under 35 U.S.C. 371 or (2) are being filed as a regular national application under 35 U.S.C. 111 . . .

If there are any conflicting instructions as to which sections of the statute (371 or 111) is intended the application will be accepted under 35 U.S.C. 111.

Here, the reference to 37 CFR 1.53(b) at the top of the transmittal letter filed on 27 February 2004, is an instruction to process the application pursuant to 35 U.S.C. 111(a). Thus, the application was correctly accepted as a filing under 35 U.S.C. 111(a) pursuant to 1077 OG 13. Nevertheless, applicants filed the instant petition to convert to a national stage application which is treated as a petition under 37 CFR 1.182. The $400.00 petition fee has been paid.

Applicants allege that MPEP 1893.03(a) favors them and that the transmittal letter Form PTO/SB/05 should not be a conflicting instruction. However, MPEP 1893.03(a) states: "a conflicting instruction will be present, for example, where applicant includes in the initial submission under 35 U.S.C. 371, a 'Utility Patent Application Transmittal' (Form PTO/SB/05)".

U.S. Statutes and Regulations do not make specific provision for conversion of the application to a national phase and as such the Office does not grant such petitions for conversion as a mere matter of course. The Office will only grant such petitions upon a showing by applicant of sufficient cause (e.g., the loss of patent rights) where no other remedy is available.

In the present petition, applicants have not made a showing that a loss of patent rights would occur if the above-captioned application is a filing under 35 U.S.C. 111(a).

CONCLUSION

As discussed above, the petition under 37 CFR 1.182 is **DISMISSED** without prejudice.

This application is being forwarded to Technology Center 1600 for continued processing.

Erin P. Thomson

Erin P. Thomson
Attorney Advisor
PCT Legal Administration

Telephone: (571)272-3292
Facsimile: (571)273-0459

UNITED STATES PATENT AND TRADEMARK OFFICE

Commissioner for Patents
United States Patent and Trademark Office
P.O. Box 1450
Alexandria, VA 22313-1450
www.uspto.gov

Francis Law Group
1942 Embarcadero
Oakland CA 94606

COPY MAILED

NOV 16 2005

OFFICE OF PETITIONS

In re Application of :
Claire Roberts : DECISION DISMISSING PETITION
Application No. 10/789,105 : UNDER 37 CFR 1.78(a)(3)
Filed: February 27, 2004 :
Attorney Docket No. LP-02-019 :

This is a decision on the petition under 37 CFR 1.78(a)(6), filed October 17, 2005, which is being treated as a petition under 37 CFR 1.78(a)(3) to accept an unintentionally delayed claim under 35 U.S.C. § 120 for the benefit of priority to the prior-filed International Application No. PCT/AU02/01226, filed August 30, 2002.

The petition is **DISMISSED**.

A petition for acceptance of a claim for late priority under 37 CFR 1.78(a)(3) is only applicable to those applications filed on or after November 29, 2000. Further, the petition is appropriate only after the expiration of the period specified in 37 CFR 1.78(a)(2)(ii). In addition, the petition under 37 CFR 1.78(a)(3) must be accompanied by:

(1) the reference required by 35 U.S.C. § 120 and 37 CFR 1.78(a)(2)(i) of the prior-filed application, unless previously submitted;
(2) the surcharge set forth in § 1.17(t); and
(3) a statement that the entire delay between the date the claim was due under 37 CFR 1.78(a)(2)(ii) and the date the claim was filed was unintentional. The Director may require additional information where there is a question whether the delay was unintentional.

The instant petition does not comply with item (1) above.

The Office notes that the instant nonprovisional application was not filed within 12 months from the filing date of the prior-filed international application. Therefore, the amendment on page one of the specification following the title is not acceptable as drafted because it improperly seeks to claim priority under 35 U.S.C. § 119(e) to International Application No. PCT/AU02/01226, filed August 30, 2002.

The Office further notes that 37 CFR 1.78(a)(2)(i) requires that any nonprovisional application claiming the benefit of one or more prior-filed international applications designating the United States of America must contain or be amended to contain a reference to each such prior-filed application, identifying it by international application number and international filing date, and indicating the relationship of the applications. The relationship between the applications is whether the subject application is a continuation, divisional, or continuation-in-part of a prior-filed application. An example of a proper benefit claim is: "This application is a continuation application of International Application No. PCT/US--/---, filed ---." The amendment, filed October 17, 2005, fails to comply with the provisions of 37 CFR 1.78(a)(2)(iii), and therefore, is unacceptable.

Lastly, 37 CFR 1.78(a)(3) requires a statement that the entire delay between the date the claim was due under 37 CFR 1.78(a)(2)(ii) and the date the claim was filed was unintentional. Because the statement contained in the instant petition varies from the language required by 37 CFR 1.78(a)(3), the statement contained in the instant petition is being construed as the statement required by 37 CFR 1.78(a)(3).

Accordingly, before the petition under 37 CFR 1.78(a)(3) can be granted, applicant must file a renewed petition under 37 CFR 1.78(a)(3) and a substitute amendment[1] or an Application Data Sheet, which sets forth the relationship of the prior-filed application.

Further correspondence with respect to this matter should be addressed as follows:

By mail:
Mail Stop PETITIONS
Commissioner for Patents
Post Office Box 1450
Alexandria, VA 22313-1450

By hand:
Customer Service Window
Mail Stop Petitions
Randolph Building
401 Dulany Street
Alexandria, VA 22314

By fax:
(571) 273-8300
ATTN: Office of Petitions

[1] *Note* 37 CFR 1.121 and 37 CFR 1.4(c).

Any inquiries concerning this decision may be directed to Senior Petitions Attorney Christina Tartera Donnell at (571) 272-3211.

Frances Hicks

Frances Hicks
Lead Paralegal
Office of Petitions
Office of the Deputy Commissioner
for Patent Examination Policy

UNITED STATES PATENT AND TRADEMARK OFFICE

Commissioner for Patents
United States Patent and Trademark Office
P.O. Box 1450
Alexandria, VA 22313-1450
www.uspto.gov

Francis Law Group
1942 Embarcadero
Oakland CA 94606

COPY MAILED

NOV 3 0 2005

OFFICE OF PETITIONS

In re Application of :
Claire Roberts : DECISION GRANTING PETITION
Application No. 10/789,105 : UNDER 37 CFR 1.78(a)(3)
Filed: February 27, 2004 :
Attorney Docket No. LP-02-019 :

This is a decision on the renewed petition under 37 CFR 1.78(a)(3) filed November 23, 2005, to accept an unintentionally delayed claim under 35 U.S.C. § 120 for the benefit of priority to the prior-filed International Application No. PCT/AU02/01226, filed August 30, 2002.

The petition is **granted**.

A petition for acceptance of a claim for late priority under 37 CFR 1.78(a)(3) is only applicable to those applications filed on or after November 29, 2000. Further, the petition is appropriate only after the expiration of the period specified in 37 CFR 1.78(a)(2)(ii). In addition, the petition under 37 CFR 1.78(a)(3) must be accompanied by:

(1) the reference required by 35 U.S.C. § 120 and 37 CFR 1.78(a)(2)(i) of the prior-filed application, unless previously submitted;
(2) the surcharge set forth in § 1.17(t); and
(3) a statement that the entire delay between the date the claim was due under 37 CFR 1.78(a)(2)(ii) and the date the claim was filed was unintentional. The Director may require additional information where there is a question whether the delay was unintentional.

The instant nonprovisional application was filed after November 29, 2000, and the claim herein for the benefit of priority to the prior-filed international application is submitted after expiration of the period specified in 37 CFR 1.78(a)(2)(ii). Therefore, this is a proper petition under 37 CFR 1.78(a)(3).

The petition complies with the requirements for a grantable petition under 37 CFR 1.78(a)(3) in that (1) a reference to the prior-filed International Application No. PCT/AU02/01226, has been included in an amendment to the first sentence of the specification following the title, as provided by 37 CFR 1.78(a)(2)(iii); (2) the surcharge fee required by 37 CFR 1.17(t) has been submitted; and

(3) the petition contains an appropriate statement of unintentional delay. Accordingly, having found that the instant petition for acceptance of an unintentionally delayed claim for the benefit of priority under 35 U.S.C. § 120 to the prior-filed international application satisfies the conditions of 37 CFR 1.78(a)(3), the petition is granted.

The granting of the petition to accept the delayed benefit claim to the prior-filed application under 37 CFR 1.78(a)(3) should not be construed as meaning that the instant application is entitled to the benefit of the prior-filed application. In order for the instant application to be entitled to the benefit of the prior-filed application, all other requirements under 35 U.S.C. § 120 and 37 CFR 1.78(a)(1) and (a)(2) must be met. Similarly, the fact that the corrected Filing Receipt accompanying this decision on petition includes the prior-filed application should not be construed as meaning that applicant is entitled to the claim for benefit of priority to the prior-filed application noted thereon. Accordingly, the examiner will, in due course, consider this benefit claim and determine whether the instant application is entitled to the benefit of the earlier filing date.

A corrected Filing Receipt, which includes the priority claim to the prior-filed International Application No. PCT/AU02/01226, filed August 30, 2002, accompanies this decision on petition.

Any inquiries concerning this decision may be directed to Senior Petitions Attorney Christina Tartera Donnell at (571) 272-3211. All other inquiries concerning either the examination procedures or status of the application should be directed to the Technology Center.

This matter is being referred to Technology Center Art Unit 1649 for appropriate action on the amendment filed November 23, 2005, including consideration by the examiner of applicant's entitlement to claim benefit of priority to the prior-filed international application.

Frances Hicks
Lead Paralegal
Office of Petitions
Office of the Deputy Commissioner
for Patent Examination Policy

ATTACHMENT: Corrected Filing Receipt

UNITED STATES PATENT AND TRADEMARK OFFICE

Commissioner for Patents
United States Patent and Trademark Office
P.O. Box 1450
Alexandria, VA 22313-1450
www.uspto.gov

COPY MAILED

OCT 11 2007

OFFICE OF PETITIONS

Merchant & Gould P.C.
P.O. Box 2903
Minneapolis, MN 55402-0903

In re Application of Stole :
Application No. 10/789,108 : Decision on Petition
Filing Date: February 26, 2004 :
Attorney Docket No. 10139.31US01 :

This is a decision on the petition under 37 CFR 1.181, filed June 15, 2007, to withdraw the holding of abandonment.

The petition is **granted.**

This application was held abandoned for failure to timely respond to the final Office action of October 18, 2006, which set a three (3) month shortened statutory period for reply. Accordingly, a reply was due on or before January 18, 2007. A Notice of Abandonment was mailed on May 3, 2007.

Petitioner contends a reply was timely filed in response to the final Office action.

A review of the file indicates petitioner's previously mailed reply has been matched with the file. Although the Office physically received the paper on April 23, 2007, the paper contains a certificate of mailing in compliance with 37 CFR 1.8. The certificate of mailing is dated April 18, 2007. Therefore, the reply was timely filed.

The Notice of Abandonment is hereby vacated and the holding of abandonment withdrawn.

The Office incorrectly charged a petition fee of $130 to petitioner's deposit account on June 18, 2007. The $130 has been credited back to the deposit account.

Technology Center Art Unit 3729 will be informed of the instant decision and the examiner will consider the papers filed April 23, 2007, in due course.

Telephone inquiries regarding this communication should be directed to Petitions Attorney Steven Brantley at (571) 272-3203.

Charles Steven Brantley
Senior Petitions Attorney
Office of Petitions

UNITED STATES PATENT AND TRADEMARK OFFICE

Commissioner for Patents
United States Patent and Trademark Office
P.O. Box 1450
Alexandria, VA 22313-1450
www.uspto.gov

CALFEE HALTER & GRISWOLD, LLP
800 SUPERIOR AVENUE
SUITE 1400
CLEVELAND OH 44114

COPY MAILED

MAR 1 1 2005

OFFICE OF PETITIONS

In re Application of
Jamieson, et al.
Application No. 10/789,114
Filed: February 26, 2004
Attorney Docket No. 21220/04179
For: SYSTEM AND METHOD OF IDENTIFYING AN OBJECT IN A LASER BEAM ILLUMINATED SCENE BASED ON MATERIAL TYPES

: DECISION GRANTING
: PETITION

This is a decision on the petition under 37 CFR 1.53(e), filed February 22, 2005 (certificate of mailing date February 17, 2005), requesting, in effect, partial withdrawal of the Notice to File Missing Parts of Nonprovisional Application (Notice) insofar as it alleges that Figures 11-13 described in the specification were omitted.

The application was filed on February 26, 2004. On January 21, 2005, the Office of Initial Patent Examination mailed a Notice informing petitioners, *inter alia*, that Figures 11-13 described in the specification appeared to have been omitted.

In response to the Notice, petitioners timely filed the present petition. Petitioners request that Figures 11-13 be accorded a filing date of February 26, 2004 on the basis that 11 pages of drawing figures, including Figures 11-13, were received in the Patent and Trademark Office (PTO) on February 26, 2004. In support, the petition is accompanied by a copy of applicants', itemized postcard receipt showing an Office of Initial Patent Examination generated barcode citing February 26, 2004 as the date of receipt. The postcard lists, *inter alia*, that the filing included 11 pages of drawings.

The return postcard constitutes *prima facie* evidence that 11 pages of drawing figures were filed on February 26, 2004. MPEP 503. A review of the originally filed pages of drawings reveals that only 9 pages are present. Accordingly, the request is granted.

Pursuant to petitioners' authorization, the $400.00 petition fee will be credited to deposit account no. 03-0172.

The application is being returned to Office of Initial Patent Examination for further processing, with a filing date of **February 26, 2004**, using the 2 pages of drawing figures submitted with the instant petition. Office records will be corrected to show that 11 pages of drawings were present on filing.

Any inquiries pertaining to this matter may be directed to the undersigned at (571) 272-3230.

E. Shirene Willis
Senior Petitions Attorney
Office of Petitions

UNITED STATES PATENT AND TRADEMARK OFFICE

Commissioner for Patents
United States Patent and Trademark Office
P.O. Box 1450
Alexandria, VA 22313-1450
www.uspto.gov

SHELL OIL COMPANY
LEGAL - INTELLECTUAL PROPERTY
P.O. BOX 2463
HOUSTON TX 77252-2463

COPY MAILED

FEB 0 1 2005

OFFICE OF PETITIONS

In re Application of
Laurent Alain Michel Fenouil et al.
Application No. 10/789,115
Filed: February 27, 2004
Attorney Docket No. TH185403(US)

:DECISION ON PETITIONS
: UNDER 37 CFR 1.78(a)(3)
: UNDER 37 CFR 1.78(a)(6)

This is a decision on the petition under 37 CFR 1.78(a)(3) and 1.78(a)(6) filed October 22, 2004, to accept an unintentionally delayed claim under 35 U.S.C. § 120 and 119(e) for the benefit of the prior-filed nonprovisional and provisional applications set forth in the concurrently filed amendment.

The petition is **DISMISSED AS MOOT**.

A petition under 37 CFR §§ 1. 78(a)(3) and 1.78(a)(6) is only applicable to those applications filed on or after November 29, 2000.

Along with the instant petition under 37 CFR §§ 1.78(a)(3) and 1.76(a)(6), petitioner has submitted an amendment to the first sentence of the specification following the title to include a reference to the prior-filed applications.

The instant pending nonprovisional application was filed on February 27, 2004, and was pending at the time of filing of the instant petition. While a reference to the prior-filed applications was not included in an ADS or in the first sentence of the specification following the title, reference nevertheless was made in the transmittal letter filed with the above-identified application.

The current procedure where a claim for priority under 37 CFR §§ 1.78(a)(3) and 1.78(a)(6) is not included in the first sentence of the specification or in an ADS but does appear either in the oath or declaration or a transmittal letter filed with the application and the Office notes the claim for priority, no petition will be required to accept a late claim for priority. This is because the application would have been scheduled for publication on the basis of the information concerning the claim submitted elsewhere in the application within the time period set forth in 37 CFR §§ 1.78(a)(2)(ii) and 1.78(a)(5)(ii). However, on the other hand, if the USPTO does not note the claim for

priority to the prior-filed application(s) set forth in the oath or declaration or transmittal letter submitted with the application, a petition will be required to accept a late claim for priority under 37 CFR §§ 1.78(a)(3) and 1.78(a)(6).[1] In the instant case, the Office noted the claim for priority of the prior-filed applications in the transmittal letter filed with the application, as shown by their inclusion on the filing receipt.

In vew of the above, the $130.00 petition fee submitted is unnecessary and will be refunded to petitioner's deposit account in due course.

Any questions concerning this decision on petition may be directed to Senior Petitions Attorney Patricia Faison-Ball at (571) 272-3212. All other inquiries concerning either the examination procedures or status of the application should be directed the Technology Center.

This matter is being referred to Technology Center Art Unit 1764 for appropriate action on the amendment filed October 22, 2004, including consideration of the claim under 35 U.S.C. § 120 and 37 CFR 1.78(a)(2) and the claim under 35 U.S.C. § 119(e) and 37 CFR 1.78(a)(5) for benefit of the prior-filed applications.

Frances Hicks
Petitions Examiner
Office of Petitions
Office of the Deputy Commissioner
for Patent Examination Policy

[1] *Note* MPEP 201.11 (V), page 200-75 (Rev. 1. Feb. 2004 and 66 Federal Register 67087 at 67089 (Dec. 28, 2001), effective December 28, 2001.

UNITED STATES PATENT AND TRADEMARK OFFICE

COMMISSIONER FOR PATENTS
UNITED STATES PATENT AND TRADEMARK OFFICE
P.O. BOX 1450
ALEXANDRIA, VA 22313-1450
www.uspto.gov

TIMOTHY N. ELLIS, PATENT ATTORNEY
8680 VIA MALLORCA, SUITE D
LA JOLLA, CA 92037

COPY MAILED

MAR 15 2005

OFFICE OF PETITIONS

In re Application of :
Robert B. Basham, et al. :
Application No.: 10/789,124 : ON PETITION
Filed: February 27, 2004 :
Attorney Docket No. SJO920030103US1 :

This is a decision on the petition under 37 CFR 1.182, filed January 18, 2005, to change the name of one of the joint inventors.

The petition is **GRANTED**.

The name of the third inventor has been changed from Sunil Kumar Nagarajrao to **Sunil Bharadwaj**. A corrected Filing Receipt is enclosed.

The application is being referred to Technology Center AU 2122.

Telephone inquiries concerning this decision may be directed to the undersigned at (571) 272-3204.

Sherry D. Brinkley
Petitions Examiner
Office of Petitions
Office of the Deputy Commissioner
for Patent Examination Policy

Enclosure: Corrected Filing Receipt

UNITED STATES PATENT AND TRADEMARK OFFICE

UNITED STATES DEPARTMENT OF COMMERCE
United States Patent and Trademark Office
Address: COMMISSIONER FOR PATENTS
P.O. Box 1450
Alexandria, Virginia 22313-1450
www.uspto.gov

FLIESLER MEYER LLP
650 CALIFORNIA STREET
14TH FLOOR
SAN FRANCISCO, CA 94108

Mail Date: 04/20/2010

Applicant	: Daryl B. Olander	: DECISION ON REQUEST FOR
Patent Number	: 7647564	: RECALCULATION of PATENT
Issue Date	: 01/12/2010	: TERM ADJUSTMENT IN VIEW
Appliction No	: 10/789,140	: OF WYETH AND NOTICE OF INTENT TO
Filed	: 02/27/2004	: ISSUE CERTIFICATE OF CORRECTION
		:

The Request for Recalculation is **GRANTED** to the extent indicated.

The patent term adjustment has been determined to be **601** days. The USPTO will *sua sponte* issue a certificate of correction reflecting the amount of PTA days determined by the recalculation.

Prior to the issuance of the certificate of correction, the USPTO will afford patentee an opportunity to be heard and request reconsideration. Accordingly, patentee has **one month or thirty (30) days**, whichever is longer, to file a request for reconsideration of this patent term adjustment calculation. See 35 U.S.C. 154(b)(3)(B)(ii) and 37 CFR 1.322(a)(4). No extensions of time will be granted under 37 CFR 1.136.

Patentee should use document code PET.OP if electronically filing a request for reconsideration of this patent term adjustment calculation. The patentee must also include the information required by 37 CFR 1.705(b)(2) and the fee required by 37 CFR 1.18(e). If patentee does not file a timely request for reconsideration of this patent term adjustment calculation including the information required by 37 CFR 1.705(b)(2) and the fee required by 37 CFR 1.18(e), the USPTO will issue a certificate of correction reflecting the PTA determination noted above.

Patentee should be aware that in order to preserve the right to review in the United States District Court for the District of Columbia of the USPTO patent term adjustment determination, patentee must ensure that he or she also take the steps required under 35 U.S.C. 154(b)(4)(A) in a timely manner. Nothing in the request for recalculation should be construed as providing an alternative time frame for commencing a civil action under 35 U.S.C. 154(b)(4)(A).

Any questions concerning this decision should be directed to the Office of Patent Legal Administration at 571-272-7702.

UNITED STATES PATENT AND TRADEMARK OFFICE

Commissioner for Patents
United States Patent and Trademark Office
P.O. Box 1450
Alexandria, VA 22313-1450
www.uspto.gov

Calfree Halter & Griswold LLP
Suite 1100
21 East State Street
Columbus, OH 43215-4243

COPY MAILED

AUG 0 4 2006

OFFICE OF PETITIONS

In re Application of
Matthew Berry
Application No. 10/789,155
Filed: February 27, 2004
Attorney Docket No. 28773.04003

DECISION ON PETITION
TO WITHDRAW
FROM RECORD

This is a decision on the Request to Withdraw as attorney or agent of record under 37 C.F.R. § 1.36(b), filed January 1, 2006.

The request is **NOT APPROVED** as moot.

A review of the file record indicates that the power of attorney given to Joan N. Drew and attorney(s) and/or agents(s) associated with Customer Number 24024 have been revoked by the applicant of the patent application on January 26, 2006. Accordingly, the request to withdraw under 37 C.F.R. § 1.36(b) is moot.

All future communications from the Office will continue to be directed to the below-listed address until otherwise notified by applicant.

Telephone inquires concerning this decision should be directed to Terri Williams at 571-272-2991.

David Bucci
Petitions Examiner
Office of Petitions

cc: McNees, Wallace & Nurick, LLC
21 E. State Street
17th Floor
Columbus, OH 43215-4228

UNITED STATES PATENT AND TRADEMARK OFFICE

Commissioner for Patents
United States Patent and Trademark Office
P.O. Box 1450
Alexandria, VA 22313-1450
www.uspto.gov

MAILED

APR 26 2010

OFFICE OF PETITIONS

TOWNSEND AND TOWNSEND AND CREW, LLP
TWO EMBARCADERO CENTER
EIGHTH FLOOR
SAN FRANCISCO CA 94111-3834

In re Application of	:	
Philip F. Spalding Jr.	:	
Application No. 10/789,158	:	DECISION ON PETITION
Filed: February 27, 2004	:	
Attorney Docket No. 026818-000100US	:	

This is a decision on the petition under the unintentional provisions of 37 CFR 1.137(b), filed December 28, 2009, to revive the above-identified application.

The petition is **GRANTED**.

The petition satisfies the conditions for revival pursuant to the provisions of 37 CFR 1.137(b) in that (1) the reply in the form of an RCE and a previously filed amendment; (2) the petition fee; and (3) the required statement of unintentional delay have been received. Accordingly, the reply is accepted as having been unintentionally delayed.

An extension of time under 37 CFR 1.136 must be filed prior to the expiration of the maximum extendable period for reply. *See* In re Application of S., 8 USPQ2d 1630, 1631 (Comm'r Pats. 1988). Since the $1,175 extension of time fee submitted with the petition on December 28, 2009, was subsequent to the maximum extendable period for reply, this fee is unnecessary and will be credited to petitioner's deposit account as authorized.

Telephone inquiries concerning this decision should be directed to the undersigned at (571) 272-3208.

This application is being referred to Technology Center AU 3626 for appropriate action by the Examiner in the normal course of business on the reply received December 28, 2009.

/KOC/
Karen Creasy
Petitions Examiner
Office of Petitions

UNITED STATES PATENT AND TRADEMARK OFFICE

Commissioner for Patents
United States Patent and Trademark Office
P.O. Box 1450
Alexandria, VA 22313-1450
www.uspto.gov

JUN - 8 2005

MERCHANT & GOULD PC
P.O. BOX 2903
MINNEAPOLIS MN 55402-0903

In re Application of	:	
Michel Franz	:	
Serial No.: 10/789,174	:	PETITION TO MAKE SPECIAL
Filed: February 26, 2004	:	
Attorney Docket No.: 09997.0087US01	:	

This is in response to applicant's petition filed May 27, 2005, to make the above-identified application special under the provisions of 37 CFR 1.102(d).

Applicant has satisfied the provisions set forth in M.P.E.P. 708.02, VIII. (A), (B), (C), (D), and (E). The $130.00 petition fee as required by 37 CFR 1.17(h) was received. Therefore, the petition is **GRANTED**.

The application will be forwarded the examiner for action on the merits commensurate with this decision.

Should there be any questions with regard to this letter please contact Marianne C. Seidel by letter addressed to the Director, Technology Center 1600, P.O. Box 1450, Alexandria, VA 22313-1450, or by telephone at 571-272-0584 or by facsimile transmission at the general Office facsimile number, (703) 872-9306.

Marianne C. Seidel
Special Program Examiner
Technology Center 1600

UNITED STATES PATENT AND TRADEMARK OFFICE

COMMISSIONER FOR PATENTS
UNITED STATES PATENT AND TRADEMARK OFFICE
P.O. BOX 1450
ALEXANDRIA, VA 22313-1450
www.uspto.gov

Townsend and Townsend and Crew, LLP
Two Embarcadero Center
Eighth Floor
San Francisco, CA 94111-3834

COPY MAILED

MAY 2 6 2005

OFFICE OF PETITIONS

In re Application of	:	
John C. Zarganis	:	
Application No. 10/789,176	:	DECISION GRANTING
Filed: February 26, 2004	:	PETITION
Attorney Docket No. 020843-002710US	:	

This is a decision on the petition filed July 19, 2004, requesting that the above-identified application retain its filing date of February 26, 2004.

The petition is **GRANTED**.

The application was filed on February 26, 2004. However, the Office of Initial Patent Examination mailed a "Notice of Omitted Items" on May 20, 2004 stating that Figures 3 & 4 described in the specification appear(s) to have been omitted.

In response, applicant filed the present petition and a copy of the applicant's postcard receipt acknowledging receipt of 10 sheets of drawings, which included Figures 3 & 4 on February 26, 2004 in the United States Patent and Trademark Office (USPTO). Additionally, applicants resubmitted 10 sheets of drawings, which include Figures 3 & 4 with the instant petition.

MPEP 503 in pertinent part states:

> "A post card receipt which itemizes and properly identifies the papers which are being filed serves as prima facie evidence of receipt in the PTO of all the items listed thereon on the date stamped thereon by the PTO."

Upon review of the record, Figures 3&4, deposited on February 26, 2004, have not been located among the application papers. However, the evidence is convincing that the application papers deposited on February 26, 2004, which were subsequently misplaced in the USPTO. Therefore, the application, including Figures 3 & 4, was complete on filing and will be granted a filing date of February 26, 2004.

Since the Office erred by mailing the Notice of Omitted Items, the petition fee of $130 will be credited to petitioner's deposit account in due course.

This application file is being referred to the Office of Initial Patent Examination Division for further **processing with a filing date of February 26, 2004, with an indication on the filing receipt that 10 sheets of drawings were present on filing and using the 10 sheets of drawings, which include Figures 3 & 4 supplied with the instant petition.**

Telephone inquiries concerning this matter may be directed to Marianne Jenkins at (571) 272-3223.

Brian Hearn
Senior Petitions Examiner
Office of Petitions
Office of the Deputy Commissioner
for Patent Examination Policy

UNITED STATES PATENT AND TRADEMARK OFFICE

Commissioner for Patents
United States Patent and Trademark Office
P.O. Box 1450
Alexandria, VA 22313-1450
www.uspto.gov

Paper No.

MAILED

APR 29 2010

OFFICE OF PETITIONS

LAHIVE & COCKFIELD, LLP
FLOOR 30, SUITE 3000
ONE POST OFFICE SQUARE
BOSTON MA 02109

In re Patent No. 7,468,269	: DECISION ON REQUEST
Kenan C. Murphy	: FOR
Issue Date: December 23, 2008	: RECONSIDERATION OF
Application No. 10/789,186	: PATENT TERM ADJUSTMENT
Filed: February 26, 2004	: and
Atty Docket No. UMY-046	: NOTICE OF INTENT TO ISSUE
	: CERTIFICATE OF CORRECTION

This is a decision on the petition filed on February 4, 2009, which is being treated as a petition under 37 CFR 1.705(d) requesting that the patent term adjustment indicated on the above-identified patent be corrected to indicate that the term of the above-identified patent is extended or adjusted by three hundred twenty-nine (329) days.

The petition to correct the patent term adjustment indicated on the above-identified patent to indicate that the term of the above-identified patent is extended or adjusted by three hundred twenty-nine (329) days is **GRANTED**.

The Office acknowledges submission of the $200.00 fee set forth in 37 CFR 1.18(e). No additional fees are required.

The application is being forwarded to the Certificates of Correction Branch for issuance of a certificate of correction. The Office will issue a certificate of correction indicating that the term of the above-identified patent is extended or adjusted by **three hundred twenty-nine (329)** days.

Telephone inquiries specific to this matter should be directed to the undersigned at (571) 272-3231.

DWood

Douglas I. Wood
Senior Petitions Attorney
Office of Petitions

Enclosure: Copy of DRAFT Certificate of Correction

UNITED STATES PATENT AND TRADEMARK OFFICE

CERTIFICATE OF CORRECTION

PATENT : 7,468,269 B2

DATED : **December 23, 2008** **DRAFT**

INVENTOR(S) : Murphy

It is certified that error appears in the above-identified patent and that said Letters Patent is hereby corrected as shown below:

On the cover page,

[*] Notice: Subject to any disclaimer, the term of this patent is extended or adjusted under 35 USC 154(b) by 258 days.

Delete the phrase "by 258 days" and insert – by 329 days--

SPE RESPONSE FOR CERTIFICATE OF CORRECTION

Paper No : _____

DATE 5/1/2008

TO SPE OF . ART UNIT 3700 (3739)

SUBJECT : Request for Certificate of Correction on Patent No. 7,278,965

Attn: John Leubecker

A response is requested with respect to the accompanying request for a certificate of correction

Please complete this form and forward within 7 days to: **Scanning customer Support**

Send copy also via PTO mail to:
Certificates of Correction Branch - 2900 South Tower 9A39A
Palm location **7580** - Tel. No. 308-8309

With respect to the change(s) requested, correcting Office and/or Applicant's errors, should the patent read as shown in the certificate of correction? No new matter should be introduced, nor should the scope or meaning of the claims be changed.

***Ok to enter changes to claims as req. in COCIN?** **OK**

Thank You For Your Assistance

Ernest C. White, LIE - 308-9590x122
Certificates of Correction Branch

The request for issuing the above-identified correction(s) is hereby:
Note your decision on the appropriate box

X **Approved**	**All** changes apply.
☐ **Approved in Part**	Specify below which changes **do not** apply.
☐ **Denied**	State the reasons for denial below.

Comments:

_____

_____

_____

_____

_____

SPE Art

PTOL-306 (REV. 7-03) U.S. DEPARTMENT OF COMMERCE Patent and Trademark Office

UNITED STATES PATENT AND TRADEMARK OFFICE

Commissioner for Patents
United States Patent and Trademark Office
P.O. Box 1450
Alexandria, VA 22313-1450
www.uspto.gov

ZAGORIN OBRIEN & GRAHAM LLP
7600B N CAPITAL OF TEXAS HIGHWAY
SUITE 350
AUSTIN TX 78731

COPY MAILED

SEP 2 3 2004

OFFICE OF PETITIONS

In re Application of:
Andrew Miner
Application No. 10/789,205
Filed: February 27, 2004
Attorney Docket No. 089-0006

DECISION

This is a decision on the "REQUEST TO EXCUSE SMALL ENTITY ERROR (37 CFR §1.28(c))", filed August 20, 2004.

The fee deficiency submission under 37 CFR 1.28 is hereby **accepted.**

Deposit Account No. 50-0631 has been charged $579 ($385 difference for the statutory filing fee, $129 difference for the independent claims in excess of 3, and $65 difference for the surcharge for the late filing fee).

The change of status to a large entity has been entered and made of record.

The file is being forwarded to Group Art Unit 3653 for examination in due course.

Telephone inquiries concerning this matter may be directed to the undersigned at (703) 305-0272.

Cliff Congo
Petitions Attorney
Office of Petitions

OIPE
AUG 2 0 2004
PATENT & TRADEMARK OFFICE

PATENT MAINTENANCE DIVISION
PATENT

IN THE UNITED STATES PATENT AND TRADEMARK OFFICE

2004 AUG 24 PM 12:43

RECEIVED
AUG 26 2004
OFFICE OF PETITIONS

Applicant(s):	Uttam Ghoshal		
Title:	FLUIDIC APPARATUS AND METHOD FOR COOLING A NON-UNIFORMLY HEATED POWER DEVICE		
Application No.:	10/789,205	Filed:	February 27, 2004
Patent No.:	n/a	Granted:	n/a
Examiner:	Unknown	Group Art Unit:	Unknown
Atty. Docket No.:	089-0006	Confirmation No.:	Unknown

August 18, 2004

Commissioner for Patents
P.O. Box 1450
Alexandria, VA 22313-1450

REQUEST TO EXCUSE SMALL ENTITY ERROR (37 CFR § 1.28(c))

Small entity status was previously established in good faith in the above-identified application. However:

☒ it was later discovered that such status as a small entity was established in error.

☐ through error, the Office was not notified of a loss of entitlement to small entity status as required under 37 CFR § 1.27(g)(2).

The deficiency payment and itemization required for the error to be excused under 37 CFR § 1.28(c) are submitted herewith and calculated below.

Pursuant to 37 CFR § 1.28(d), the deficiency payment submitted herewith is to be treated as a notice of loss of entitlement to small entity status as required by 37 CFR § 1.27(g)(2).

08/25/2004 DALLEN 00000051 10789205
01 FC:1461 514.00 OP
Adjustment date: 09/23/2004 AKELLEY
08/25/2004 DALLEN 00000051 10789205
01 FC:1461 -514.00 OP
09/23/2004 AKELLEY 00000006 500631 10789205
01 FC:1461 65.00 DA 514.00 OP

PATENT MAINTENANCE DIVISION

ITEMIZATION AND CALCULATION OF DEFICIENCY PAYMENT

2004 AUG 24 PM 12:43

Type of Fee Erroneously Paid as a Small Entity	Date Paid	Fee Paid	Current Fee	Deficiency
Basic Statutory Filing Fee	27-Feb-04	$385.00	$770.00	$385.00
Claims in Excess of 20	27-Feb-04	$0.00	$0.00	$0.00
Independent Claims in Excess of 3	27-Feb-04	$129.00	$258.00	$129.00
Total Deficiency:				$514.00

FEE AUTHORIZATION

☒ A check in the amount of the Total Deficiency ($514.00) is enclosed.

☐ Please charge the Total Fee shown above to Deposit Account n/a.

☒ If any additional fees should be due, the undersigned hereby authorizes the Commissioner to charge any such fees to Deposit Account No. 50-0631.

CERTIFICATE OF MAILING OR TRANSMISSION

I hereby certify that, on the date shown below, this correspondence is being

☒ deposited with the US Postal Service with sufficient postage as first class mail, in an envelope addressed to Commissioner for Patents, P.O. Box 1450, Alexandria, VA 22313-1450.

☐ facsimile transmitted to the US Patent and Trademark Office.

David W. O'Brien — 18-Aug-04 (Date)

EXPRESS MAIL LABEL: _____

Respectfully submitted,

David W. O'Brien, Reg. No. 40,107
Attorney for Applicant(s)
(512) 338-6314
(512) 338-6301 (fax)

UNITED STATES PATENT AND TRADEMARK OFFICE

Commissioner for Patents
United States Patent and Trademark Office
P.O. Box 1450
Alexandria, VA 22313-1450
www.uspto.gov

MAILED
FROM DIRECTORS OFFICE
OCT 04 2005
TECHNOLOGY CENTER 3600

SCHLUMBERGER K.K.
Intellectual Property and Legal Department
2-2-1 Fuchinobe, Sagamihara-shi
Kanagawa-ken
229-0006
JAPAN

In re Application of : PETITION TO
Thomas J. Plona et al : ACCEPT COLOR
Application No. 10/789,210 : DRAWINGS/PHOTOGRAPHS
Filed: February 27, 2004 :
For: SLOWNESS-FREQUENCY PROJECTION DISPLAY AND ANIMATION

This is a decision on applicant's petition under 37 CFR 1.184(A)(2) filed February 27, 2004 to accept color drawings/photographs.

For the acceptance of color drawings in accordance with 37 CFR 1.184(A)(2), a petition is required which fulfills the following requirements:

(i) The appropriate fee set forth in 1.17(h),
(ii) three (3) sets of color drawings/photographs, and
(iii) amending the specification to contain the following language as the first paragraph in that portion of the specification relating to the brief description of the drawings: "The file of this patent contains at least one drawing executed in color photography. Copies of this patent with color photographs will be provided by the Patent and Trademark Office upon request and payment of necessary fee."

Having met the requirements of 37 CFR 1.184(A)(2), the petition is **GRANTED**.

Any questions or comments with respect to the decision should be forwarded to Supervisory Patent Examiner, Jack Keith at the number listed below.

Jack Keith
Supervisory Patent Examiner
Art Unit 3663
(571) 272-6878

jwk: 10/3/05

IN THE UNITED STATES PATENT AND TRADEMARK OFFICE

In re Application of: T. Plona, et al.	) Docket: 26.0273 US)
Serial No.: Unknown	) Group Art Unit: Unknown
Filed: Herewith	) Examiner: Unknown
For: Slowness-Frequency Projection Display and Animation	)

PETITION TO ACCEPT COLOR DRAWINGS UNDER §1.84(a)(2)

Commissioner for Patents
P.O. Box 1450
Alexandria, VA 22313-1450

Sir:

The applicant hereby petitions the Office to accept the color drawings submitted with the above-identified patent application. The applicant has included color drawings for Figures 2, 3A-E, 4D-E, 5A-C, 6B, 6D, 7A-D, 8A-D, 9A-C and 10 which include features that cannot be shown practically in another way. Namely, Color figures illustrate various slowness logs, plots, and displays generated from sonic data. The logs, plots and displays are only usefully understood when a user is able to see different components of different colors, which cannot be sufficiently distinguished from other colors using black and white drawings.

The applicant therefore respectfully requests that the color drawings be accepted. The applicant has included the required language identifying the color drawings at the first paragraph of the BRIEF DESCRIPTION OF THE DRAWINGS portion of the specification. Three copies of the color Figures 2, 3A-E, 4D-E, 5A-C, 6B, 6D, 7A-D, 8A-D, 9A-C and 10 are enclosed.

The Commissioner is hereby authorized to deduct the appropriate fee for this petition as set forth under 37 CFR §1.17(h) from deposit account number 50-1122.

Respectfully Submitted,

Robin Nava
Registration Number 42,926

Date: 27-FEB-2004

Schlumberger Conveyance and Delivery Center
555 Industrial Blvd. MD1
Sugar Land, Texas 77478
Tel: 281 285 4791
Fax: 281 285 7056

UNITED STATES PATENT AND TRADEMARK OFFICE

Commissioner for Patents
United States Patent and Trademark Office
P.O. Box 1450
Alexandria, VA 22313-1450
www.uspto.gov

Paper No.

Schlumberger K.K.
Intellectual Property and Legal Department
2-2-1 Fuchinobe, Sagamihara-shi
Kanagawa-ken 229-0-006 JP JAPAN

COPY MAILED
AUG 1 1 2008

In re Application of	:	
Thomas J. Plona et al.	:	
Application No. 10/789,210	:	DECISION ON PETITION
Filed: February 27, 2004	:	PURSUANT TO
Attorney Docket Number:	:	37 C.F.R. § 1.137(B)
26.0273 US	:	
Title: SLOWNESS-FREQUENCY	:	
PROJECTION DISPLAY AND	:	
ANIMATION	:	

This is a decision on the petition filed March 13, 2008, pursuant to 37 C.F.R. § 1.137(b), to revive the above-identified application.

The petition pursuant to 37 C.F.R. § 1.137(b) is **GRANTED.**

The above-identified application became abandoned for failure to reply within the meaning of 37 C.F.R § 1.113 in a timely manner to the final Office action mailed August 21, 2007, which set a shortened statutory period for reply of three months. An after-final amendment was received on January 22, 2008, along with a petition for a two-month extension of time (it is noted that January 21, 2008 fell on a Federal holiday). An advisory action was mailed on February 20, 2008. No further extensions of time

under the provisions of 37 C.F.R § 1.136(a) were requested, and no further responses were received. Accordingly, the above-identified application became abandoned on January 22, 2008.

A grantable petition pursuant to 37 C.F.R. § 1.137(b) must be accompanied by:

(1) The reply required to the outstanding Office action or notice, unless previously filed;
(2) The petition fee as set forth in 37 C.F.R. § 1.17(m);
(3) A statement that the entire delay in filing the required reply from the due date for the reply until the filing of a grantable petition pursuant to this paragraph was unintentional. The Commissioner may require additional information where there is a question whether the delay was unintentional, and;
(4) Any terminal disclaimer (and fee as set forth in 37 C.F.R. § 1.20(d)) required pursuant to paragraph (d) of this section.

With this petition, Petitioner has submitted the petition fee, a Request for Continued Examination (RCE) along with the associated fee, and the proper statement of unintentional delay.

The first three requirements of Rule 1.137(b) have been met. The fourth requirement is not applicable, as a terminal disclaimer is not required.

The Technology Center will be notified of this decision. The Technology Center's support staff will notify the Examiner of this decision, so that the submission under 37 C.F.R. § 1.114 - the amendment received on January 22, 2008 - can be processed.

Petitioner may find it beneficial to view Private PAIR within a fortnight of the present decision to ensure that the revival has been acknowledged by the Technology Center in response to this decision. It is noted that all inquiries with regard to any failure of that change in status should be directed to the Technology Center where that change of status must be effected - **the Office of Petitions cannot effectuate a change of status.**

Telephone inquiries regarding *this decision* should be directed to the undersigned at (571) 272-3225[1]. All other inquiries

1 Petitioner will note that all practice before the Office should be in writing, and the action of the Office will be based exclusively on the written

concerning the status of the application should be directed to the Technology Center.

/Paul Shanoski/
Paul Shanoski
Senior Attorney
Office of Petitions

---

record in the Office. See 37 C.F.R. § 1.2. As such, Petitioner is reminded that no telephone discussion may be controlling or considered authority for any further action(s) of Petitioner.

COMMISSIONER FOR PATENTS
UNITED STATES PATENT AND TRADEMARK OFFICE
P.O BOX 1450
ALEXANDRIA, VA 22313-1450
www.uspto.gov

26 AUG 2004

Stephen D. Harper
Henkel Corporation
Patent Law Department
2200 Renaissance Blvd., Suite 200
Gulph Mills PA 19406

In re Application of	:	DECISION ON
CHURCH Richard	:	
Application No.: 10/789,225	:	
Filing Date: 27 February 2004	:	PETITION UNDER
Attorney's Docket No.: M 5796 HST	:	
For: COATING FOR COLD WORKING	:	
METALS	:	37 CFR 1.137(b)

This is in response to "Petition For Revival Of A Patent Application Abandoned Unintentionally Under 37 C.F.R. 1.137(b)" filed on 27 February 2004.

Applicants' petition under 37 CFR 1.137(b) filed 27 February 2004 to revive international application PCT/US01/18261 abandoned under 35 U.S.C. 371(d) is hereby **GRANTED** as to the National stage in the United States of America as follows:

On 19 October 2001, a Demand electing the United States was filed in this international application. International application PCT/US01/18261 became abandoned as to the United States of America at midnight on 08 December 2002 for failure to pay the basic national fee. The filing of the present continuing application under 35 U.S.C. 111 is accepted as the appropriate response under 37 CFR 1.137(b) (See MPEP § 711.03(c)).

International application PCT/US01/18261 is being revived for purposes of continuity only and since continuity has been established by this decision reviving the international application, the international application is again abandoned in favor of the present continuing application number 10/789,225.

This application is being forward to Office Initial Patent Examination(OIPE) for continued processing.

Rafael Bacares
PCT Legal Examiner
PCT Legal Office
Telephone: (703) 308-6312
Facsimile: (703) 308-6459

UNITED STATES PATENT AND TRADEMARK OFFICE

COMMISSIONER FOR PATENTS
UNITED STATES PATENT AND TRADEMARK OFFICE
P.O. BOX 1450
ALEXANDRIA, VA 22313-1450
www.uspto.gov

MAIL

NOV 18 2004

DIRECTOR OFFICE
TECHNOLOGY CENTER 2600

Ivan S. Kavrukov
Cooper & Dunham LLP
1185 Avenue of the Americas
New York NY 10036

In re Application of :
Yoshiyuki SASAKI :
Application No. 10/789,235 : DECISION ON PETITION
Filed: February 27, 2004 : TO MAKE SPECIAL
For: **INFORMATION REPRODUCING METHOD AND APPARATUS** :

This is a decision on the petition filed October 7, 2004 under Manual of Patent Examination Procedure §708.02, VIII requesting accelerated examination.

The petition under Manual of Patent Examination Procedure §708.02, VIII, must:
(1) be filed prior to receiving any examination by the examiner,
(2) be accompanied by the required fee- $130,
(3) the claims should be directed to a single invention (if it is determined that the claims pertain to more than one invention, then applicant will have to make an election without traverse or forfeit accelerated examination status),
(4) state that a pre-examination search was made, and fully discuss the search method employed, such as classes and subclasses searched, publications, Chemical abstracts, patents, etc. A search made by a foreign patent office satisfies this requirement,
(5) be accompanied by a copy of each of the references most closely related to the subject matter encompassed by the claims if said references are not already of record,
(6) fully discuss the references, pointing out with the particularity required by 37 C.F.R. §1.111 (b) and (c), how the claimed subject matter is patentable over the references.

The petitioner meets all the above-listed requirements. Accordingly, the petition is **GRANTED**.

The application will retain its special status throughout its entire prosecution, including any appeal to the Board of Patent Appeals and Interferences, subject only to diligent prosecution by the applicant. The application file is being forwarded to the examiner for appropriate action in due course.

Kenneth A. Wieder
Special Program Examiner
Technology Center 2600
Communications

UNITED STATES PATENT AND TRADEMARK OFFICE

COMMISSIONER FOR PATENTS
UNITED STATES PATENT AND TRADEMARK OFFICE
P.O. BOX 1450
ALEXANDRIA, VA 22313-1450
www.uspto.gov

KUDIRKA & JOBSE, LLP
ONE STATE STREET
SUITE 800
BOSTON MA 02109

COPY MAILED

NOV 23 2005

OFFICE OF PETITIONS

Applicant: Yang et al.
Appl. No.: 10/789,243
Filing Date: December 30, 2004
Title: STEERING OF DIRECTIONAL SOUND BEAMS
Attorney Docket No.: P0003/7001
Pub. No.: US 2004/0264707 A1
Pub. Date: December 30, 2004

This is a decision on the request for a corrected patent application publication under 37 CFR 1.221(b), filed on March 2, 2005, for the above-identified application

The request is DISMISSED.

Applicant requests that the application be republished because the patent application publication contains a material error, as on page 1, paragraph 007, the phrase "3-4kHz" is misprinted as "34kHz".

37 CFR 1.221 (b) is applicable "only when the Office makes a material mistake which is apparent from Office records.... Any request for a corrected publication or revised patent application publication other than provided as provided in paragraph (a) of this section must be filed within two months from the date of the patent application publication. This period is not extendable." A material mistake must affect the public's ability to appreciate the technical disclosure of the patent application publication, to determine the scope of the patent application publication, or to determine the scope of the provisional rights that an applicant may seek to enforce upon issuance of a patent. [1]

The request for corrected publication received on March 2, 2005, was not timely filed under 37 CFR 1.221(b).

The error noted by requestor wherein the phrase "[h]uman hearing is more sensitive to stimuli having middle frequency components (i.e., 3-4 kHz) than low frequency components" is misprinted as "[h]uman hearing is more sensitive to stimuli having middle frequency components (i.e., 34 kHz) than low frequency components" in the background of the invention is an Office error but the mistake is a minor typographical error, which is clearly understandable to

[1] Changes to Implement Eighteen-Month Publication of Patent Applications, 65 FR 57023, 57038 (Sept. 20, 2000), 1239, Off. Gaz. Pat. Office Notices 63, 75 (Oct 10, 2000) (final rule).

one of ordinary skill in reading the specification. The mistake is a minor typographical error in the background of the invention, which is clearly understandable from reading the specification in which the phrase is used, as terms are not read in a vacuum. Furthermore, the phrase states that human hearing is more sensitive to stimuli having middle frequency components, in which 34kHz is clearly outside the middle frequency and it is outside of human hearing. The frequency range of 3-4 kHz is well know to be the middle frequency range of human hearing. The mistake does not affect the public's ability to appreciate the technical disclosure of the patent application publication, or determine the scope of the patent application publication or determine the scope of the provisional rights that an applicant may seek to enforce upon issuance of a patent.

The applicant is advised that a "request for republication of an application previously published" may be filed under 37 CFR 1.221 (a). Such a request for republication "must include a copy of the application compliance with the Office's electronic filing system requirements and be accompanied by the publication fee set forth in § 1.18 (d) and the processing fee set forth in § 1.17 (i)." If the request for republication does not comply with the electronic filing system requirements, the republication will not take place and the publication fee set forth in § 1.18 (d) will be refunded. The processing fee will be retained.

Any request for republication under 37 CFR 1.221(a), must be submitted via the EFS system and questions or request for reconsideration of the decision, should be addressed as follows:

By mail to: Mail Stop PGPUB
Commissioner for Patents
P.O. Box 1450
Alexandria, Va. 22313-1450

By facsimile: 571-273-8300

Inquiries relating to this matter may be directed to Mark Polutta at (571) 272-7709 (voice).

Mark Polutta
Senior Legal Advisor
Office of Patent Legal Administration
Office of the Deputy Commissioner
for Patent Examination Policy

UNITED STATES PATENT AND TRADEMARK OFFICE

Commissioner for Patents
United States Patent and Trademark Office
P.O. Box 1450
Alexandria, VA 22313-1450
www.uspto.gov

SHELL OIL COMPANY
LEGAL - INTELLECTUAL PROPERTY
P O BOX 2463
HOUSTON, TX 77252-2463

COPY MAILED

MAY 0 3 2005

OFFICE OF PETITIONS

In re Application of
Laurent Alain Michel Fenouil et al
Application No. 10/789,263
Filed: February 27, 2004
Attorney Docket No. TH1854 05 (US)

:DECISION ON PETITIONS
:UNDER 37 CFR 1.78(a)(3)
:AND 37 CFR 1.78(a)(6)

This is a decision on the petition treated under 37 CFR §§ 1.78(a)(3) and 1.78(a)(6), filed October 22, 2004, to accept an unintentionally delayed claim under 35 U.S.C. §§ 120 and 119(e) for the benefit of the prior-filed nonprovisional and provisional applications set forth in the concurrently filed amendment.

The petition is **DISMISSED AS MOOT**.

A petition under 37 CFR §§ 1. 78(a)(3) and 1.78(a)(6) is only applicable to those applications filed on or after November 29, 2000.

Along with the instant petition under 37 CFR §§ 1.78(a)(3) and 1.76(a)(6), petitioner has submitted an amendment to the first sentence of the specification following the title to include a reference to the prior-filed applications.

The instant pending nonprovisional application was filed on February 27, 2004, and was pending at the time of filing of the instant petition. While a reference to the prior-filed applications was not included in an ADS or in the first sentence of the specification following the title, reference nevertheless was made in the transmittal letter filed with the above-identified application.

The current procedure where a claim for priority under 37 CFR §§ 1.78(a)(3) and 1.78(a)(6) is not included in the first sentence of the specification or in an ADS but does appear either in the oath or declaration or a transmittal letter (or other place) filed with the application and the Office notes the claim for priority, no petition will be required to accept a late claim for priority. This is because the application would have been scheduled for publication on the basis of the information concerning the claim submitted elsewhere in the application within the time period set forth in 37 CFR §§ 1.78(a)(2)(ii) and 1.78(a)(5)(ii). However, on the other hand, if the USPTO does not note the claim for priority to the prior-filed application(s) set forth in the oath

or declaration or transmittal letter submitted with the application, a petition will be required to accept a late claim for priority under 37 CFR §§ 1.78(a)(3) and 1.78(a)(6).[1] In the instant case, the Office noted the claim for priority of the prior-filed applications.

In view of the above, the $130 (incorrect fee--correct fee is $1,370) surcharge fee submitted is unnecessary and will be refunded to petitioner's deposit account in due course.

Any questions concerning this decision on petition may be directed to the undersigned at (571) 272-3218. All other inquiries concerning either the examination procedures or status of the application should be directed to the Technology Center.

This application is being forwarded to the Examiner of Technology Center AU 1626 for examination in due course, including consideration of the claim under 35 U.S.C. § 120 and 37 CFR 1.78(a)(2) and the claim under 35 U.S.C. § 119(e) and 37 CFR 1.78(a)(5) for benefit of the prior-filed applications.

Frances Hicks
Petitions Examiner
Office of Petitions
Office of the Deputy Commissioner
for Patent Examination Policy

[1] *Note* MPEP 201.11 (III)(D) , pages 200-59 and 200-60 (Rev. 2. May 2004) and 66 Federal Register 67087 at 67089 (Dec. 28, 2001), effective December 28, 2001.

UNITED STATES PATENT AND TRADEMARK OFFICE

Commissioner for Patents
United States Patent and Trademark Office
P.O. Box 1450
Alexandria, VA 22313-1450
www.uspto.gov

SHELL OIL COMPANY
LEGAL - INTELLECTUAL PROPERTY
P O BOX 2463
HOUSTON, TX 77252-2463

COPY MAILED

MAY 0 9 2005

OFFICE OF PETITIONS

In re Application of
Laurent Alain Michel Fenouil et al
Application No. 10/789,264
Filed: February 27, 2004
Attorney Docket No. TH1854 04 (US)

:DECISION ON PETITIONS
:UNDER 37 CFR 1.78(a)(3)
:AND 37 CFR 1.78(a)(6)

This is a decision on the petition treated under 37 CFR §§ 1.78(a)(3) and 1.78(a)(6), filed October 22, 2004, to accept an unintentionally delayed claim under 35 U.S.C. §§ 120 and 119(e) for the benefit of the prior-filed nonprovisional and provisional applications set forth in the concurrently filed amendment.

The petition is **DISMISSED AS MOOT**.

A petition under 37 CFR §§ 1. 78(a)(3) and 1.78(a)(6) is only applicable to those applications filed on or after November 29, 2000.

Along with the instant petition under 37 CFR §§ 1.78(a)(3) and 1.76(a)(6), petitioner has submitted an amendment to the first sentence of the specification following the title to include a reference to the prior-filed applications.

The instant pending nonprovisional application was filed on February 27, 2004, and was pending at the time of filing of the instant petition. While a reference to the prior-filed applications was not included in an ADS or in the first sentence of the specification following the title, reference nevertheless was made in the transmittal letter and declaration filed with the above-identified application.

The current procedure where a claim for priority under 37 CFR §§ 1.78(a)(3) and 1.78(a)(6) is not included in the first sentence of the specification or in an ADS but does appear either in the oath or declaration or a transmittal letter (or other place) filed with the application and the Office notes the claim for priority, no petition will be required to accept a late claim for priority. This is because the application would have been scheduled for publication on the basis of the information concerning the claim submitted elsewhere in the application within the time period set forth in 37 CFR §§ 1.78(a)(2)(ii) and 1.78(a)(5)(ii). However, on the other hand, if the

USPTO does not note the claim for priority to the prior-filed application(s) set forth in the oath or declaration or transmittal letter submitted with the application, a petition will be required to accept a late claim for priority under 37 CFR §§ 1.78(a)(3) and 1.78(a)(6).[1] In the instant case, the Office noted the claim for priority of the prior-filed applications.

In view of the above, the $130 surcharge fee[2] submitted is unnecessary and will be refunded to petitioner's deposit account in due course.

Any questions concerning this decision on petition may be directed to the undersigned at (571) 272-3218. All other inquiries concerning either the examination procedures or status of the application should be directed to the Technology Center.

This application is being forwarded to the Examiner of Technology Center AU 1626 for examination in due course, including consideration of the claim under 35 U.S.C. § 120 and 37 CFR 1.78(a)(2) and the claim under 35 U.S.C. § 119(e) and 37 CFR 1.78(a)(5) for benefit of the prior-filed applications.

Frances Hicks
Petitions Examiner
Office of Petitions
Office of the Deputy Commissioner
for Patent Examination Policy

[1] *Note* MPEP 201.11 (III)(D) , pages 200-59 and 200-60 (Rev. 2. May 2004) and 66 Federal Register 67087 at 67089 (Dec. 28, 2001), effective December 28, 2001.

[2] The correct fee for a petition under 37 CFR 1.78(a)(3) and (a)(6) is $1,370.

UNITED STATES PATENT AND TRADEMARK OFFICE

Commissioner for Patents
United States Patent and Trademark Office
P.O. Box 1450
Alexandria, VA 22313-1450
www.uspto.gov

MORISHITA LAW FIRM
3800 HOWARD HUGHES PARKWAY
SUITE 850
LAS VEGAS, NV 89109

COPY MAILED

APR 0 6 2006

OFFICE OF PETITIONS

In re Application of :
Edward Mitchell :
Application No. 10/789,270 : ON PETITION
Filed: February 28, 2004 :
Attorney Docket No. Mitchelle06-01 :

This is a decision on the petition under 37 CFR 1.137(b), filed January 25, 2006, to revive the above-identified application.

The petition is **GRANTED**.

The above-identified application became abandoned for failure to reply in a timely manner to the non-final Office action mailed December 2, 2004 which set a shortened statutory period for reply of three (3) months. No extensions of time under the provisions of 37 CFR 1.136(a) were obtained. Accordingly, the above-identified application became abandoned on March 3, 2005.

The instant petition satisfies the conditions for revival pursuant to the provisions of 37 CFR 1.137(b) in that (1) the reply in the form of an amendment; (2) the petition fee; and (3) the required statement of unintentionally delay have been received. Accordingly, the reply to the non-final Office action of December 2, 2004 is accepted as having been unintentionally delayed.

This matter will be referred to Technology Center AU 3714.

Telephone inquiries concerning this decision should be directed to Wan Laymon at (571) 272-3220.

Wan Laymon
Petitions Examiner
Office of Petitions

UNITED STATES PATENT AND TRADEMARK OFFICE

Commissioner for Patents
United States Patent and Trademark Office
P.O. Box 1450
Alexandria, VA 22313-1450
www.uspto.gov

LAHIVE & COCKFIELD, LLP.
28 STATE STREET
BOSTON, MA 02109

COPY MAILED

JUN 22 2005

OFFICE OF PETITIONS

In re Application of :
Schenk, et al. :
Application No. 10/789,273 : ON PETITION
Filed: February 27, 2004 :
Attorney Docket No. ELN-002CPCN3 :

This is a decision on the petition under 37 CFR 1.181, to withdraw the holding of abandonment and the petition under 37 CFR 1.59(b) to expunge papers in the application file, submitted January 28, 2005.

Regarding the petition under 37 CFR 1.181:

The above-identified application became abandoned for failure to reply in a timely manner to the Notice to File Missing Parts of Application (Notice) mailed May 13, 2004. However, on February 15, 2005, the Office of Initial Patent Examination mailed a "Withdrawal of Previously Sent Notice" that stated:

> "The Notice mailed on 05/13/2004 was sent in error and is hereby withdrawn. A corrected Notice is enclosed. The time period for reply runs from the mail date of the corrected Notice."

As such, the application is not abandoned and the petition under 37 CFR 1.181 to withdraw the holding of abandonment is dismissed as moot.

Regarding the petition under 37 CFR 1.59(b):

The petition is granted. The docket report (Appendix A of the accompanying Petition under 37 CFR 1.181 to withdraw the holding of abandonment) will be expunged from the application file.

The file is being forwarded to the Office of Initial Patent Examination for further processing.

Telephone inquiries concerning this matter may be directed to Petitions Attorney Edward Tannouse at (571) 272-3228.

Brian Hearn

Brian Hearn
Petitions Examiner
Office of Petitions
Office of the Deputy Commissioner
for Patent Examination Policy

United States
Patent And
Trademark Office

P.O. Box 1450, Alexandria, Virginia 22313-1450 – www.uspto.gov

PETITION DECISION

06/18/04

Cislo & Thomas LLP
233 Wilshire Boulevard
Suite 900
Santa Monica, CA 90401

Dear Applicant:

The Box PG Pub replacement drawings for application number 10/789283 received on 06/09/04 by the U. S. Patent and Trademark Office will be included for patent publication.

Telephone inquiries should be directed to Kaletus King, Office of Pre-Grant Publication 703 605-4283.

Kaletus King

Signature of Reviewer, Office of Pre-Grant Publication

UNITED STATES PATENT AND TRADEMARK OFFICE

COMMISSIONER FOR PATENTS
UNITED STATES PATENT AND TRADEMARK OFFICE
P.O. BOX 1450
ALEXANDRIA, VA 22313-1450
www.uspto.gov

RESEARCH IN MOTION
ATTN: GLENDA WOLFE
BUILDING 6, BRAZOS EAST, SUITE 100
5000 RIVERSIDE DRIVE
IRVING, TX 75039

COPY MAILED

JUN 19 2008

OFFICE OF PETITIONS

In re Application of :
Wen Zhao, et. al. :
Application No. 10/789,298 : DECISION ON PETITION
Filed: February 27, 2004 :
Attorney Docket No. 0108-0241/US :

This is a decision on the petition under 37 CFR 1.181 (no fee), filed October 24, 2007, requesting withdrawal of the holding of abandonment in the above-identified application.

The petition is **DISMISSED**.

This application was held abandoned for failure to reply to the non-final Office action mailed January 17, 2007, which set a three (3) month shortened statutory period for reply. A Notice of Abandonment was mailed on October 4, 2007.

Petitioner asserts that the Office action dated January 17, 2007 was not received.

A review of the written record indicates no irregularity in the mailing of the Office action, and, in the absence of any irregularity, there is a strong presumption that the Office action was properly mailed to the practitioner at the address of record. This presumption may be overcome by a showing that the Office action was not in fact received. In this regard, the showing required to establish the failure to receive the Office action must consist of the following:

1. a statement from practitioner stating that the Office action was not received by the practitioner;

2. a statement from the practitioner attesting to the fact that a search of the file jacket and docket records indicates that the Office action was not received; and

3. a copy of the docket record where the nonreceived Office action would have been entered had it been received must be attached to and referenced in the practitioner's statement.

The petition fails to satisfy requirement (3) above.

It is noted that while petitioner provided the Office with a copy of "a Patent Record Sheet from the Practitioner's docketing software, which includes the docket record where the non-received Office Action would have been entered had it been received and docketed," it is not legible. Also, the petition fails to describe the system used for recording an Office action received at the correspondence address of record with the USPTO and a statement that the docketing system is sufficiently reliable.

Additionally, a copy of the practitioner's record(s) required to show non-receipt of the Office action should include the master docket for the firm. That is, if a three month period for reply was set in the nonreceived Office action, a copy of the master docket report showing all replies docketed for a date three months from the mail date of the nonreceived Office action must be submitted as documentary proof of nonreceipt of the Office action. **If no such master docket exists, the practitioner should so state and provide other evidence[1] such as, but not limited to, the following: the application file jacket; incoming mail log; calendar; reminder system; or the individual docket record for the application in question.**< *See* MPEP § 711.03(c) under subheading "Petition to Withdraw Holding of Abandonment Based on Failure to Receive Office Action," and "Withdrawing the Holding of Abandonment When Office Actions Are Not Received," 1156 Official Gazette 53 (November 16, 1993).

In view of the above, the docket record presented cannot be relied on to show that all USPTO communications were entered and docketed when received. Accordingly, absent the required evidence to establish nonreceipt of the Office action of January 17, 2007, the petition requesting withdrawal of the holding of abandonment cannot be granted at this time.

If petitioner cannot supply the evidence necessary to withdraw the holding of abandonment, or simply does not wish to, petitioner should consider filing a petition under 37 CFR 1.137(b) stating that the delay was unintentional. Public Law 97-247, § 3, 96 Stat. 317 (1982), which revised patent and trademark fees, amended 35 U.S.C. § 41(a)(7) to provide for the revival of an "unintentionally" abandoned application without a showing that the delay in prosecution or in late payment of the issue fee was "unavoidable." This amendment to 35 U.S.C. § 41(a)(7) has been implemented in 37 CFR 1.137(b). An "unintentional" petition under 37 CFR 1.137(b) must be accompanied by the $1,540 petition fee.

The filing of a petition under 37 CFR 1.137(b) cannot be intentionally delayed and therefore must be filed promptly. A person seeking revival due to unintentional delay cannot make a statement that the delay was unintentional unless the entire delay, including the date it was

---

[1] Any evidence submitted must be legible.

discovered that the application was abandoned until the filing of the petition to revive under 37 CFR 1.137(b), was unintentional. A statement that the delay was unintentional is not appropriate if petitioner intentionally delayed the filing of a petition for revival under 37 CFR 1.137(b).

The file does not indicate a change of address has been submitted, although the address given on the petition differs from the address of record. If appropriate, a change of address should be filed in accordance with MPEP 601.03. A courtesy copy of this decision is being mailed to the address given on the petition; however, the Office will mail all future correspondence solely to the address of record.

Any request for reconsideration of this decision should be filed within **TWO (2) MONTHS** from the mail date of this decision. *Note* 37 CFR 1.181(f). The request for reconsideration should include a cover letter and be entitled as a "Renewed Petition under 37 CFR 1.181 to Withdraw the Holding of Abandonment."

Further correspondence with respect to this matter should be addressed as follows:

By mail: Mail Stop PETITION
Commissioner for Patents
P. O. Box 1450
Alexandria, VA 22313-1450

By hand: U. S. Patent and Trademark Office
Customer Service Window, Mail Stop Petitions
Randolph Building
401 Dulany Street
Alexandria, VA 22314

By facsimile: **(571) 273-8300**
Attn: Office of Petitions

Telephone inquiries concerning this decision should be directed to the undersigned at (571) 272-3226.

Andrea Smith
Petitions Office
Office of Petitions

cc: John J. Oskorep, Esq. LLC
One Magnificent Mile Center
980 North Michigan Avenue, Suite 1400
Chicago, IL 60611

UNITED STATES PATENT AND TRADEMARK OFFICE

Commissioner for Patents
United States Patent and Trademark Office
P.O. Box 1450
Alexandria, VA 22313-1450
www.uspto.gov

RESEARCH IN MOTION
ATTN: GLENDA WOLFE
BUILDING 6, BRAZOS EAST, SUITE 100
5000 RIVERSIDE DRIVE
IRVING, TX 75039

MAILED

MAR 19 2009

OFFICE OF PETITIONS

In re Application of :
Wen Zhao, et. al. :
Application No. 10/789,298 : DECISION ON PETITION
Filed: February 27, 2004 :
Attorney Docket No. 0108-0241/US :

This is a decision on the renewed petition, filed August 1, 2008, which is being treated as a petition under 37 CFR 1.181 (no fee) requesting withdrawal of the holding of abandonment in the above-identified application.

In response to the decision mailed on June 19, 2008, petitioner submits the present renewed petition along with a legible copy of a docket record.

The showing required to establish the failure to receive the Office action, under 37 CFR 1.181, must consist of the following:

1. a statement from practitioner stating that the Office action was not received by the practitioner;

2. a statement from the practitioner attesting to the fact that a search of the file jacket and docket records indicates that the Office action was not received; and

3. a copy of the docket record where the nonreceived Office action would have been entered had it been received and docketed must be attached to and referenced in the practitioner's statement.

Since the petition satisfies the above-stated requirements, the application was not abandoned in fact. Therefore, the petition is **GRANTED**.

In view of the above, the Notice of Abandonment is hereby vacated and the holding of abandonment withdrawn.

This application is being referred to the Technology Center technical support staff of Art Unit 2617 for re-mailing the Office action of January 17, 2007. The period for reply will run from the mailing date of the Office action.

The record does not indicate a change of correspondence address. Therefore, a courtesy copy of this decision is being mailed to the address given in the petition; thereafter, the Office will mail all future correspondence solely to the address of record unless otherwise indicated.

Andrea Smith
Petitions Examiner
Office of Petitions

cc: John J. Oskorep, Esq. LLC
One Magnificent Mile Center
980 North Michigan Avenue, Suite 1400
Chicago, IL 60611

UNITED STATES PATENT AND TRADEMARK OFFICE

UNITED STATES DEPARTMENT OF COMMERCE
United States Patent and Trademark Office
Address: COMMISSIONER FOR PATENTS
P.O. Box 1450
Alexandria, Virginia 22313-1450
www.uspto.gov

John J. Oskorep, Esq. LLC
980 North Michigan Avenue, Suite 1400
One Magnificent Mile Center
Chicago, IL 60611

Mail Date: 04/23/2010

Applicant	: Wen Zhao	: DECISION ON REQUEST FOR
Patent Number	: 7668149	: RECALCULATION of PATENT
Issue Date	: 02/23/2010	: TERM ADJUSTMENT IN VIEW
Application No	: 10/789,298	: OF WYETH AND NOTICE OF INTENT TO
Filed	: 02/27/2004	: ISSUE CERTIFICATE OF CORRECTION
		:

The Request for Recalculation is **GRANTED** to the extent indicated.

The patent term adjustment has been determined to be **1722** days. The USPTO will *sua sponte* issue a certificate of correction reflecting the amount of PTA days determined by the recalculation.

Prior to the issuance of the certificate of correction, the USPTO will afford patentee an opportunity to be heard and request reconsideration. Accordingly, patentee has **one month or thirty (30) days**, whichever is longer, to file a request for reconsideration of this patent term adjustment calculation. See 35 U.S.C. 154(b)(3)(B)(ii) and 37 CFR 1.322(a)(4). No extensions of time will be granted under 37 CFR 1.136.

Patentee should use document code PET.OP if electronically filing a request for reconsideration of this patent term adjustment calculation. The patentee must also include the information required by 37 CFR 1.705(b)(2) and the fee required by 37 CFR 1.18(e). If patentee does not file a timely request for reconsideration of this patent term adjustment calculation including the information required by 37 CFR 1.705(b)(2) and the fee required by 37 CFR 1.18(e), the USPTO will issue a certificate of correction reflecting the PTA determination noted above.

Patentee should be aware that in order to preserve the right to review in the United States District Court for the District of Columbia of the USPTO patent term adjustment determination, patentee must ensure that he or she also take the steps required under 35 U.S.C. 154(b)(4)(A) in a timely manner. Nothing in the request for recalculation should be construed as providing an alternative time frame for commencing a civil action under 35 U.S.C. 154(b)(4)(A).

Any questions concerning this decision should be directed to the Office of Patent Legal Administration at 571-272-7702.

UNITED STATES PATENT AND TRADEMARK OFFICE

Commissioner for Patents
United States Patent and Trademark Office
P.O. Box 1450
Alexandria, VA 22313-1450
www.uspto.gov

RAYMOND J. WERNER
2056 NW ALOCLEK DRIVE, SUITE 314
HILLSBORO OR 97124

COPY MAILED

APR 24 2007

OFFICE OF PETITIONS

In re Application of :
Morgan T. Johnson :
Application No. 10/789,305 :
Filed: 02-27-2004 :
Attorney Docket No. ML. P004 :

DECISION ON PETITION

This is a decision on the petition under 37 CFR 1.137(b), filed January 8, 2007, to revive the above-identified application.

The above-identified application became abandoned for failure to file a timely response to the nonfinal Office Action, mailed April 17, 2006, which set a three-month shortened statutory period for reply. The above-identified application became abandoned on July 18, 2006. On December 14, 2006, the Office mailed a Notice of Abandonment.

Petitioner has met the requirements to revive the above-identified application pursuant to 37 CFR 1.137(b). Petitioner submitted the required reply, paid the petition fee, and made the proper statement of unintentional delay. Accordingly, the petition is **granted.**

This matter is being referred to Technology Center Art Unit 2829.

Telephone inquiries specific to this decision may be directed to the undersigned at (571) 272-3211. All other inquiries concerning either the examination procedures or status of the application should be directed to the Technology Center.

Christina Tartera Donnell

Christina Tartera Donnell
Senior Petitions Attorney
Office of Petitions

United States
Patent And
Trademark Office

P.O. Box 1450, Alexandria, Virginia 22313-1450 – www.uspto.gov

PETITION DECISION

05/11/04

Weingarten, Schurgin, Gagnebin & Lebovici LLP
James F. Thompson
Ten Post Office Square
Boston MA 02109

Dear Applicant:

The Box PG Pub replacement drawings for application number 10/789312 received on 04/29/04 by the U. S. Patent and Trademark Office will be included for patent publication.

Telephone inquiries should be directed to Kaletus King, Office of Pre-Grant Publication 703 605-4283.

Kaletus King

Signature of Reviewer, Office of Pre-Grant Publication

UNITED STATES PATENT AND TRADEMARK OFFICE

Commissioner for Patents
United States Patent and Trademark Office
P.O. Box 1450
Alexandria, VA 22313-1450
www.uspto.gov

BRADLEY ARANT ROSE & WHITE LLP
200 CLINTON AVE. WEST
SUITE 900
HUNTSVILLE AL 35801

COPY MAILED

SEP 29 2006

OFFICE OF PETITIONS

In re Application of :
Okuniewicz :
Application No. 10/789,325 : DECISION ON PETITION
Filed: February 27, 2004 : UNDER 37 CFR 1.78(a)(3)
Attorney Docket No. A9658-81022 :

This is a decision on the petition under 37 CFR 1.78(a)(3), filed April 28, 2006, to accept an unintentionally delayed claim under 35 U.S.C. §120 for the benefit of the prior-filed nonprovisional applications set forth in the concurrently filed amendment.

The petition is **DISMISSED.**

A petition for acceptance of a claim for late priority under 37 CFR 1.78(a)(3) is only applicable to those applications filed on or after November 29, 2000. Further, the petition is appropriate only after the expiration of the period specified in 37 CFR 1.78(a)(2)(ii). In addition, the petition under 37 CFR 1.78(a)(3) must be accompanied by:

(1) the reference required by 35 U.S.C. § 120 and 37 CFR 1.78(a)(2)(i) of the prior-filed application, unless previously submitted;
(2) the surcharge set forth in § 1.17(t); and
(3) a statement that the entire delay between the date the claim was due under 37 CFR 1.78(a)(2)(ii) and the date the claim was filed was unintentional. The Director may require additional information where there is a question whether the delay was unintentional.

The petition does not comply with item (1)

37 CFR 1.78(a)(2)(i) requires that any nonprovisional application claiming the benefit of one or more prior-filed copending nonprovisional applications must contain or be amended to contain a reference to each such prior-filed application, identifying it by application number (consisting of the series code and serial number) and indicating the relationship of the applications. The relationship between the applications is whether the subject application is a continuation,

divisional, or continuation-in-part of a prior-filed nonprovisional application. An example of a proper benefit claim is: "This application is a continuation of Application No. 10/---, filed---." A benefit claim that merely states: "This application claims the benefit of Application No. 10/---, filed---," does not comply with 37 CFR 1.72(a)(2)(i) since the proper relationship, which includes the type of continuing application, is not stated. Also, the status of each nonprovisional parent application (if it is patented or abandoned) should also be indicated, following the filing date of the parent nonprovisional application. See MPEP Section 201.11, Rev. 2, May 2004, Reference to Prior Application.

While the newly added applications state relationships, the previously claimed applications do not all state relationships. For example, some applications are listed as "related" applications. In addition, the first sentence of the benefit claim lists the applications in backwards order. The most recently filed application in the chain should be listed first and the oldest filed application in the chain should be listed last.

Before the petition under 37 CFR § 1.78(a)(3) can be granted, a renewed petition under 37 CFR § 1.78(a)(3) and a substitute amendment or an Application Data Sheet (complying with 37 CFR 1.121 and 37 CFR 1.76(b)(5)) which state the relationships of the prior-filed applications between themselves and the above-identified application are required.

Further correspondence with respect to this matter should be addressed as follows:

By mail:
Mail Stop PETITIONS
Commissioner for Patents
Post Office Box 1450
Alexandria, VA 22313-1450

By hand:
Customer Service Window
Mail Stop Petitions
Randolph Building
401 Dulany Street
Alexandria, VA 22314

By fax:
(571) 273-8300
ATTN: Office of Petitions

Any questions concerning this matter may be directed to the undersigned at (571) 272-3230.

Shirene Willis Brantley

Shirene Willis Brantley
Senior Petitions Attorney
Office of Petitions

UNITED STATES PATENT AND TRADEMARK OFFICE

Commissioner for Patents
United States Patent and Trademark Office
P.O. Box 1450
Alexandria, VA 22313-1450
www.uspto.gov

BRADLEY ARANT ROSE & WHITE LLP
200 CLINTON AVE. WEST
SUITE 900
HUNTSVILLE AL 35801

COPY MAILED

FEB 0 1 2007

OFFICE OF PETITIONS

In re Application of :
Okuniewicz :
Application No. 10/789,325 : DECISION ON PETITION
Filed: February 27, 2004 : UNDER 37 CFR 1.78(a)(3) & (a)(6)
Attorney Docket No. A9658-81022 :

This is a decision on the reconsideration petition under 37 CFR 1.78(a)(3), filed October 17, 2006, to accept an unintentionally delayed claim under 35 U.S.C. §120 for the benefit of the prior-filed nonprovisional applications set forth in the concurrently filed amendment. The petition will be treated under 37 CFR 1.78(a)(6), in addition.

The petition is **DISMISSED.**

A petition for acceptance of a claim for late priority under 37 CFR §§ 1.78(a)(3) and 1.78(a)(6) is only applicable to those applications filed on or after November 29, 2000 and after the expiration of the period specified in 37 CFR §§ 1.78(a)(2)(ii) and 1.78(a)(5)(ii). In addition, the petition under 37 CFR §§ 1.78(a)(3) and 1.78(a)(6) must be accompanied by:

(1) the reference required by 35 U.S.C. §§ 120 and 119(e) and 37 CFR §§ 1.78(a)(2)(i) and 1.78(a)(5)(i) of the prior-filed application, unless previously submitted;
(2) the surcharge set forth in § 1.17(t); and
(3) a statement that the entire delay between the date the claim was due under 37 CFR §§ 1.78(a)(2)(ii) and 1.78(a)(5)(ii) and the date the claim was filed was unintentional. The Director may require additional where there is a question whether the delay was unintentional.

The petition does not comply with item (1).

It appears that petitioner has re-submitted the flawed amendment filed on April 28, 2006.

Elaborating on the prior decision:

While the newly added applications state relationships, the previously claimed applications do **not** state relationships. Therefore, the previously claimed applications were never entered into Office databases. As of today, no continuity claims have been entered in records for Application No. 10/789,325. The provisional application was not entered because it was filed more than a year from the filing date of the present application. It could not rely on the filing date of the Application no. 09/834,537 because that application was not properly claimed.

Petitioner must clarify the relationships between Application No. 10/789,325, Application No. 10/388,819, Application No. 09/834,537, and Application No. 60/196,827. It not sufficient to list their relationships as "related" applications.

The first sentence of the benefit claim lists the applications in backwards order. The most recently filed application in the chain should be listed first and the oldest filed application in the chain should be listed last.

Before the petition under 37 CFR § 1.78(a)(3) can be granted, a renewed petition under 37 CFR § 1.78(a)(3) and a substitute amendment or an Application Data Sheet (complying with 37 CFR 1.121 and 37 CFR 1.76(b)(5)) which state the relationships of the prior-filed applications between themselves and the above-identified application are required.

Further correspondence with respect to this matter should be addressed as follows:

By mail: Mail Stop PETITIONS
Commissioner for Patents
Post Office Box 1450
Alexandria, VA 22313-1450

By hand: Customer Service Window
Mail Stop Petitions
Randolph Building
401 Dulany Street
Alexandria, VA 22314

By fax: (571) 273-8300
ATTN: Office of Petitions

Any questions concerning this matter may be directed to the undersigned at (571) 272-3230.

Shirene Willis Brantley
Senior Petitions Attorney
Office of Petitions

UNITED STATES PATENT AND TRADEMARK OFFICE

Commissioner for Patents
United States Patent and Trademark Office
P.O. Box 1450
Alexandria, VA 22313-1450
www.uspto.gov

BRADLEY ARANT ROSE & WHITE LLP
200 CLINTON AVE. WEST
SUITE 900
HUNTSVILLE AL 35801

COPY MAILED

APR 27 2007

OFFICE OF PETITIONS

In re Application of
Okuniewicz
Application No. 10/789,325
Filed: February 27, 2004
Attorney Docket No. A9658-81022

DECISION ON PETITION
UNDER 37 CFR 1.78(a)(3) & (a)(6)

This is a decision on the reconsideration petition under 37 CFR 1.78(a)(3), filed March 2, 2007, to accept an unintentionally delayed claim under 35 U.S.C. §120 for the benefit of the prior-filed nonprovisional and provisional applications set forth in the concurrently filed amendment.

The petition is **GRANTED.**

A petition for acceptance of a claim for late priority under 37 CFR §§ 1.78(a)(3) and 1.78(a)(6) is only applicable to those applications filed on or after November 29, 2000 and after the expiration of the period specified in 37 CFR §§ 1.78(a)(2)(ii) and 1.78(a)(5)(ii). In addition, the petition under 37 CFR §§ 1.78(a)(3) and 1.78(a)(6) must be accompanied by:

(1) the reference required by 35 U.S.C. §§ 120 and 119(e) and 37 CFR §§ 1.78(a)(2)(i) and 1.78(a)(5)(i) of the prior-filed application, unless previously submitted;

(2) the surcharge set forth in § 1.17(t); and

(3) a statement that the entire delay between the date the claim was due under 37 CFR §§ 1.78(a)(2)(ii) and 1.78(a)(5)(ii) and the date the claim was filed was unintentional. The Director may require additional where there is a question whether the delay was unintentional.

Additionally, the instant nonprovisional application must be pending at the time of filing of the reference to the prior-filed provisional application as required by 37 CFR 1.78(a)(5)(ii). Further, a nonprovisional application claiming the benefit of the prior-filed provisional application must have been filed within twelve months of the filing date of the prior-filed provisional application. All the above requirements having been satisfied, the late claim for benefit of priority under 35 U.S.C. §§ 120 and 119(e) is accepted as being unintentionally delayed.

The granting of the petition to accept the delayed benefit claim to the prior-filed applications under 37 CFR §§ 1.78(a)(3) and 1.78(a)(6) should not be construed as meaning that this application is entitled to the benefit of the filing date of the prior-filed applications. In order for this application to be entitled to the benefit of the prior-filed applications, all other requirements under 35 U.S.C. §§120 and 1.78(a)(1) and (a)(2) and under 35 U.S.C. §119(e) and 37 CFR 1.78(a)(4) and (a)(5) must be met. Similarly, the fact that the corrected Filing Receipt accompanying this decision on petition includes the prior-filed applications should not be construed as meaning that applicant is entitled to the claim for benefit of priority to the prior-filed applications noted thereon. Accordingly, the examiner will, in due course, consider this benefit claim and determine whether the application is entitled to the benefit of the earlier filing date.

A corrected Filing Receipt, which includes the priority claim to the prior-filed applications, accompanies this decision on petition.

Any questions concerning this matter may be directed to the undersigned at (571) 272-3230. All other inquiries concerning either the examination procedures or status of the application should be directed to the Technology Center.

This application is being forwarded to Technology Center Art Unit 3714 for consideration by the examiner of the claim under 35 U.S.C. § §120 and 119(e) of the prior-filed nonprovisional and provisional applications.

Shirene Willis Brantley

Shirene Willis Brantley
Senior Petitions Attorney
Office of Petitions

ATTACHMENT : Corrected Filing Receipt

UNITED STATES PATENT AND TRADEMARK OFFICE

UNITED STATES DEPARTMENT OF COMMERCE
United States Patent and Trademark Office
Address: COMMISSIONER FOR PATENTS
P.O. Box 1450
Alexandria, Virginia 22313-1450
www.uspto.gov

APPL NO.	FILING OR 371(c) DATE	ART UNIT	FIL FEE REC'D	ATTY.DOCKET NO	TOT CLMS	IND CLMS
10/789,325	02/27/2004	3714	646	A9658-81022	49	3

CONFIRMATION NO. 9385

CORRECTED FILING RECEIPT

OC000000023568273

32009
BRADLEY ARANT ROSE & WHITE LLP
200 CLINTON AVE. WEST
SUITE 900
HUNTSVILLE, AL 35801

Date Mailed: 04/27/2007

Receipt is acknowledged of this regular Patent Application. It will be considered in its order and you will be notified as to the results of the examination. Be sure to provide the U.S. APPLICATION NUMBER, FILING DATE, NAME OF APPLICANT, and TITLE OF INVENTION when inquiring about this application. Fees transmitted by check or draft are subject to collection. Please verify the accuracy of the data presented on this receipt. **If an error is noted on this Filing Receipt, please mail to the Commissioner for Patents P.O. Box 1450 Alexandria Va 22313-1450. Please provide a copy of this Filing Receipt with the changes noted thereon. If you received a "Notice to File Missing Parts" for this application, please submit any corrections to this Filing Receipt with your reply to the Notice. When the USPTO processes the reply to the Notice, the USPTO will generate another Filing Receipt incorporating the requested corrections (if appropriate).**

Applicant(s)

Douglas M. Okuniewicz, Las Vegas, NV;

Power of Attorney: The patent practitioners associated with Customer Number **32009**.

Domestic Priority data as claimed by applicant

This application is a CON of 10/388,819 03/14/2003
which is a CIP of 09/834,537 04/13/2001 PAT 6,585,589
which claims benefit of 60/196,827 04/13/2000
This application 10/789,325
is a CIP of 09/639,441 08/15/2000 PAT 6,840,860
which is a CIP of 08/994,075 12/19/1997 PAT 6,146,276
which is a CIP of 08/795,152 02/07/1997 PAT 5,908,354

Foreign Applications

If Required, Foreign Filing License Granted: 05/18/2004

The country code and number of your priority application, to be used for filing abroad under the Paris Convention, is US10/789,325

Projected Publication Date: Not Applicable

Non-Publication Request: No

Early Publication Request: No

**** SMALL ENTITY ****

Title

Co-located lottery game for a gaming device

Preliminary Class

463

PROTECTING YOUR INVENTION OUTSIDE THE UNITED STATES

Since the rights granted by a U.S. patent extend only throughout the territory of the United States and have no effect in a foreign country, an inventor who wishes patent protection in another country must apply for a patent in a specific country or in regional patent offices. Applicants may wish to consider the filing of an international application under the Patent Cooperation Treaty (PCT). An international (PCT) application generally has the same effect as a regular national patent application in each PCT-member country. The PCT process **simplifies** the filing of patent applications on the same invention in member countries, but **does not result** in a grant of "an international patent" and does not eliminate the need of applicants to file additional documents and fees in countries where patent protection is desired.

Almost every country has its own patent law, and a person desiring a patent in a particular country must make an application for patent in that country in accordance with its particular laws. Since the laws of many countries differ in various respects from the patent law of the United States, applicants are advised to seek guidance from specific foreign countries to ensure that patent rights are not lost prematurely.

Applicants also are advised that in the case of inventions made in the United States, the Director of the USPTO must issue a license before applicants can apply for a patent in a foreign country. The filing of a U.S. patent application serves as a request for a foreign filing license. The application's filing receipt contains further information and guidance as to the status of applicant's license for foreign filing.

Applicants may wish to consult the USPTO booklet, "General Information Concerning Patents" (specifically, the section entitled "Treaties and Foreign Patents") for more information on timeframes and deadlines for filing foreign patent applications. The guide is available either by contacting the USPTO Contact Center at 800-786-9199, or it can be viewed on the USPTO website at http://www.uspto.gov/web/offices/pac/doc/general/index.html.

For information on preventing theft of your intellectual property (patents, trademarks and copyrights), you may wish to consult the U.S. Government website, http://www.stopfakes.gov. Part of a Department of Commerce initiative, this website includes self-help "toolkits" giving innovators guidance on how to protect intellectual property in specific countries such as China, Korea and Mexico. For questions regarding patent enforcement issues, applicants may call the U.S. Government hotline at 1-866-999-HALT (1-866-999-4158).

LICENSE FOR FOREIGN FILING UNDER
Title 35, United States Code, Section 184
Title 37, Code of Federal Regulations, 5.11 & 5.15

GRANTED

The applicant has been granted a license under 35 U.S.C. 184, if the phrase "IF REQUIRED, FOREIGN FILING LICENSE GRANTED" followed by a date appears on this form. Such licenses are issued in all applications where the conditions for issuance of a license have been met, regardless of whether or not a license may be required as set forth in 37 CFR 5.15. The scope and limitations of this license are set forth in 37 CFR 5.15(a) unless an earlier

license has been issued under 37 CFR 5.15(b). The license is subject to revocation upon written notification. The date indicated is the effective date of the license, unless an earlier license of similar scope has been granted under 37 CFR 5.13 or 5.14.

This license is to be retained by the licensee and may be used at any time on or after the effective date thereof unless it is revoked. This license is automatically transferred to any related applications(s) filed under 37 CFR 1.53(d). This license is not retroactive.

The grant of a license does not in any way lessen the responsibility of a licensee for the security of the subject matter as imposed by any Government contract or the provisions of existing laws relating to espionage and the national security or the export of technical data. Licensees should apprise themselves of current regulations especially with respect to certain countries, of other agencies, particularly the Office of Defense Trade Controls, Department of State (with respect to Arms, Munitions and Implements of War (22 CFR 121-128)); the Bureau of Industry and Security, Department of Commerce (15 CFR parts 730-774); the Office of Foreign Assets Control, Department of Treasury (31 CFR Parts 500+) and the Department of Energy.

NOT GRANTED

No license under 35 U.S.C. 184 has been granted at this time, if the phrase "IF REQUIRED, FOREIGN FILING LICENSE GRANTED" DOES NOT appear on this form. Applicant may still petition for a license under 37 CFR 5.12, if a license is desired before the expiration of 6 months from the filing date of the application. If 6 months has lapsed from the filing date of this application and the licensee has not received any indication of a secrecy order under 35 U.S.C. 181, the licensee may foreign file the application pursuant to 37 CFR 5.15(b).

UNITED STATES PATENT AND TRADEMARK OFFICE

Commissioner for Patents
United States Patent and Trademark Office
P.O. Box 1450
Alexandria, VA 22313-1450
www.uspto.gov

BEVER HOFFMAN & HARMS, LLP
TRI-VALLEY OFFICE
1432 CONCANNON BLVD., BLDG. G
LIVERMORE CA 94550

COPY MAILED

JUL 13 2007

OFFICE OF PETITIONS

In re Application of	:	
Lee et al.	:	
Application No. 10/789,333	:	ON PETITION
Filed: February 26, 2004	:	
Attorney Docket No. SUP-031	:	

This is a decision on the petition under 37 C.F.R. § 1.137(b), filed June 7, 2007, to revive the above-identified application.

The petition is **GRANTED.**

The petition satisfies the conditions for revival pursuant to the provisions of 37 CFR 1.137(b) in that (1) the reply in the form of an Amendment and a Terminal Disclaimer; (2) the petition fee; and (3) the required statement of unintentional delay have been received. Accordingly, the response has been accepted as having been unintentionally delayed.

The file does not indicate a change of address has been submitted, although the address given on the petition differs from the address of record. If appropriate, a request to change the address of record should be filed. A courtesy copy of this decision is being mailed to the address given on the petition; however, the Office will mail all future correspondence solely to the address of record.

This matter is being referred to Technology Center 2100 for further examination on the merits.

Telephone inquiries regarding this decision should be directed to the undersigned at (571) 272-3206.

Liana Walsh
Petitions Examiner
Office of Petitions

Cc:

PATRICK T. BEVER
2099 GATEWAY PLACE, SUITE 320
SAN JOSE, CA 95110

UNITED STATES PATENT AND TRADEMARK OFFICE

CERTIFICATE OF CORRECTION

PATENT NO. : 5,646,126

DATED : July 8, 1997

INVENTOR(S) : Cheng et al.

It is certified that error appears in the above-indentified patent and that said Letters Patent is hereby corrected as shown below:

Column 2, line 51, "asteroid" should be --a steroid--.

Column 3, line 22, "e.q." should be --e.g.--.

Column 6, line 63, "10 mer" should be --10mer--.

Column 6, line 66, "14 mer" should be --14mer--.

Column 7, line 1, "10 mer" should be --10mer--.

Column 7, line 7, "10 mer" should be --10mer--.

Column 7, line 17, "10 mer" should be --10mer--.

Column 7, line 18, "14 mer" should be --14mer--.

Column 7, line 23, "10 mer" should be --10mer--.

Column 12, line 6, "e.q." should be --e.g.--.

Column 12, line 7, "e, g." should be --e.g.--.

Column 64, line 61, "$(CH_2)_sNH2$" should be --$(CH_2)_sNH_2$--.

Column 66, line 10, "fSEQUENCE" should be --(SEQUENCE--.

Column 66, line 13, "(SEOqUENCE" should be --(SEQUENCE--.

Column 66, line 36, "fSEQUENCE" should be --(SEQUENCE--.

Column 67, line 22, "$(CH_2)_sNH2$" should be --$(CH_2)_sNH_2$--.

Column 67, line 49, after "(SEQUENCE ID NO: 1)", delete ".".

UNITED STATES PATENT AND TRADEMARK OFFICE

CERTIFICATE OF CORRECTION

PATENT NO. : 5,646,126 Page 2 of 2

DATED : July 8, 1997

INVENTOR(S) : Cheng, et al

It is certified that error appears in the above-identified patent and that said Letters Patent is hereby corrected as shown below:

Column 68, line 48, "$(CH_2)_sNH2$" should be -- $(CH_2)_sNH_2$--.

Signed and Sealed this

Twenty-sixth Day of May, 1998

Attest:

BRUCE LEHMAN

Attesting Officer *Commissioner of Patents and Trademarks*

UNITED STATES PATENT AND TRADEMARK OFFICE

CERTIFICATE OF CORRECTION

PATENT NO. : 5,723,335

DATED : March 3, 1998

INVENTOR(S) : Hutcherson et al.

It is certified that error appears in the above-indentified patent and that said Letters Patent is hereby corrected as shown below:

At col 8, line 47, please delete "phosphorothioates" and insert therefor --Phosphorothioates--.

At col 11, line 14, after the term "by", please delete "lymphold" and insert therefor --lymphoid--.

At col 11, line 14, after the punctuation mark ".", please delete "Lymphold" and insert therefor --Lymphoid--.

At col 15, line 2, after the term "^{14}C", please delete "=".

In the claims, in claim 2, after the term "is", please delete "iL-1α" and insert therefor --IL-1α--.

Signed and Sealed this

Twenty-sixth Day of May, 1998

Attest:

BRUCE LEHMAN

Attesting Officer

Commissioner of Patents and Trademarks

UNITED STATES PATENT AND TRADEMARK OFFICE

Commissioner for Patents
United States Patent and Trademark Office
P.O. Box 1450
Alexandria, VA 22313-1450
www.uspto.gov

KNOBBE, MARTENS, OLSEN & BEAR, LLP
2040 MAIN STREET
FOURTEENTH FLOOR
IRVINE, CA 92614

MAILED

APR 23 2009

OFFICE OF PETITIONS

In re Application of :
James H. Brauker, et al. :
Application No.: 10/789,359 : ON PETITION
Filed: February 26, 2004 :
Attorney Docket No.: DEXCOM.037A :

This is a decision on the petition, filed April 22, 2009, under 37 CFR 1.313(c)(2) to withdraw the above-identified application from issue after payment of the issue fee.

The petition is **GRANTED**.

The above-identified application is withdrawn from issue for consideration of a submission under 37 CFR 1.114 (request for continued examination). See 37 CFR 1.313(c)(2).

Petitioner is advised that the issue fee paid on March 31, 2009, cannot be refunded. If, however, this application is again allowed, petitioner may request that it be applied towards the issue fee required by the new Notice of Allowance.[1]

Telephone inquiries relating to this decision should be directed to the undersigned at (571) 272-3204.

The application is being referred to Technology Center AU 3763 for further processing of the request for continued examination under 37 CFR 1.114 and for consideration of the concurrently filed Information Disclosure Statement (IDS).

/SDB/

Sherry D. Brinkley
Petitions Examiner
Office of Petitions

[1] *The request to apply the issue fee to the new Notice may be satisfied by completing and returning the new Part B - Fee(s) Transmittal Form (along with any balance due at the time of submission). Petitioner is advised that the Issue Fee Transmittal Form* **must** *be completed and timely submitted to avoid abandonment of the application.*

UNITED STATES PATENT AND TRADEMARK OFFICE

UNITED STATES DEPARTMENT OF COMMERCE
United States Patent and Trademark Office
Address: COMMISSIONER FOR PATENTS
P.O. Box 1450
Alexandria, Virginia 22313-1450
www.uspto.gov

KNOBBE, MARTENS, OLSEN & BEAR, LLP
2040 MAIN STREET
FOURTEENTH FLOOR
IRVINE, CA 92614

Mail Date: 04/21/2010

Applicant	: James H. Brauker	: DECISION ON REQUEST FOR
Patent Number	: 7591801	: RECALCULATION of PATENT
Issue Date	: 09/22/2009	: TERM ADJUSTMENT IN VIEW
Appliction No	: 10/789,359	: OF WYETH AND NOTICE OF INTENT TO
Filed	: 02/26/2004	: ISSUE CERTIFICATE OF CORRECTION
		:

The Request for Recalculation is **GRANTED** to the extent indicated.

The patent term adjustment has been determined to be **659** days. The USPTO will *sua sponte* issue a certificate of correction reflecting the amount of PTA days determined by the recalculation.

Prior to the issuance of the certificate of correction, the USPTO will afford patentee an opportunity to be heard and request reconsideration. Accordingly, patentee has **one month or thirty (30) days**, whichever is longer, to file a request for reconsideration of this patent term adjustment calculation. See 35 U.S.C. 154(b)(3)(B)(ii) and 37 CFR 1.322(a)(4). No extensions of time will be granted under 37 CFR 1.136.

Patentee should use document code PET.OP if electronically filing a request for reconsideration of this patent term adjustment calculation. The patentee must also include the information required by 37 CFR 1.705(b)(2) and the fee required by 37 CFR 1.18(e). If patentee does not file a timely request for reconsideration of this patent term adjustment calculation including the information required by 37 CFR 1.705(b)(2) and the fee required by 37 CFR 1.18(e), the USPTO will issue a certificate of correction reflecting the PTA determination noted above.

Patentee should be aware that in order to preserve the right to review in the United States District Court for the District of Columbia of the USPTO patent term adjustment determination, patentee must ensure that he or she also take the steps required under 35 U.S.C. 154(b)(4)(A) in a timely manner. Nothing in the request for recalculation should be construed as providing an alternative time frame for commencing a civil action under 35 U.S.C. 154(b)(4)(A).

Any questions concerning this decision should be directed to the Office of Patent Legal Administration at 571-272-7702.

UNITED STATES PATENT AND TRADEMARK OFFICE

Commissioner for Patents
United States Patent and Trademark Office
P.O. Box 1450
Alexandria, VA 22313-1450
www.uspto.gov

WILLIAM G. LANE
WILLIAM G. LANE, INC., P.C.
SUITE 250
16485 LAGUNA CANYON ROAD
IRVINE, CA 92618

FAX RECEIVED

MAY 26 2005

OFFICE OF PETITIONS

In re Application of :
Heyg-Kyu Song :
Application No. 10/789,366 : ON PETITION
Filed: February 27, 2004 :
Attorney Docket No. D012-1001 :

This is a decision on the petition under 37 CFR 1.173(b), filed May 13, 2005, to revive the above-identified application.

The petition is **GRANTED.**

The above-identified application became abandoned for failure to reply in a timely manner to the Notice to File Missing Parts of Nonprovisional Application (Notice) mailed May 19, 2004. The Notice set a period for reply of two (2) months from the mail date of the Notice. No extensions of time under the provisions of 37 CFR 1.136(a) were obtained. Accordingly, the above-identified application became abandoned on July 20, 2004.

Petitioner has appointed a representative to conduct all business before the U.S. Patent and Trademark Office (Office). The Office will not engage in dual correspondence with petitioner and petitioner's representative. Accordingly, petitioner must conduct all future correspondence with this Office through the representative of record. If petitioner no longer wishes to be represented by the representative of record, then a revocation of the power of attorney or authorization of agent must be submitted. A correspondence address must be included on the correspondence instructing the Office where all future communications should be mailed.

Telephone inquiries concerning this decision should be directed to Wan Laymon at (571) 272-3220.

This matter is being referred to the Office of Initial Patent Examination for preexamination processing.

Wan Laymon
Petitions Examiner
Office of Petitions
Office of the Deputy Commissioner
for Patent Examination Policy

UNITED STATES PATENT AND TRADEMARK OFFICE

Commissioner for Patents
United States Patent and Trademark Office
P.O. Box 1450
Alexandria, VA 22313-1450
www.uspto.gov

John W. Crosby
SIERRA PATENT GROUP, LTD.
P.O. Box 6149
Stateline, NV 89449

COPY MAILED

AUG 0 4 2005

OFFICE OF PETITIONS

In re Application of
KALLESTAD, John P.
Application No.: 10/789,388
Filing Date: February 28, 2005
Docket No.: DC1-001
For: DAY AND TIME CHRONOMETER MOVEMENT

DECISION

ON PETITION UNDER

37 CFR 1.137(b)

This is a decision on the "Petition to Revive Unintentionally Abandoned Application" filed on May 12, 2005. The petition under 1.137(b) is hereby **GRANTED**.

The above-identified application became abandoned for failure to file a timely and proper reply to the Notice to File Missing Parts of Nonprovisional Application ("Notice") mailed May 19, 2004. The Notice required an oath or declaration in compliance with 37 CFR 1.63, the basic filing fee, a substitute specification, new drawings, an abstract and a surcharge fee. This Notice set a two (2) month period for reply, with extensions of time obtainable under §1.136(a).

Petitioner submitted an executed declaration in compliance with 37 CFR 1.63, the required filing fee, surcharge fee, and the petition fee. A replacement specification, replacement drawings, and a replacement abstract were also submitted. Applicant's statement in the petition has been interpreted as meaning that "the entire delay in filing the required reply from the due date for the reply until the filing of a grantable petition under 37 CFR 1.137(b) was unintentional" as required by 37 CFR 1.137(b)(3). If this interpretation is incorrect, applicants should notify the office. A terminal disclaimer is not required. Accordingly, all requirements under 37 CFR 1.137(b) have been satisfied.

This application is being forwarded to the Office of Initial Patent Examination for continued processing.

James Thomson
Attorney Advisor
Office of PCT Legal Administration

Tel: 571-272-3302

Brian Hearn
Petitions Examiner
Office of Petitions

UNITED STATES PATENT AND TRADEMARK OFFICE

Commissioner for Patents
United States Patent and Trademark Office
P.O. Box 1450
Alexandria, VA 22313-1450
www.uspto.gov

COPY MAILED

OCT 01 2008

JOHN W. CROSBY
1650 Highway 395
Minden, NV 89423

In re Application of
John P. Kallestad
Application No. 10/789,388
Filed: February 28, 2004
Attorney Docket No. DC1-001

DECISION ON PETITION

This is a decision on the petition under the unintentional provisions of 37 CFR 1.137(b), filed September 8, 2008, to revive the above-identified application.

The petition is **DISMISSED**.

Any request for reconsideration of this decision must be submitted within TWO (2) MONTHS from the mail date of this decision. Extensions of time under 37 CFR 1.136(a) are permitted. The reconsideration request should include a cover letter entitled "Renewed Petition under 37 CFR 1.137(b)." This is **not** a final agency action within the meaning of 5 U.S.C. § 704.

The application became abandoned for failure to reply in a timely manner to the Non-Final Rejection mailed, January 27, 2006, which set a shortened statutory period for reply of three (3) months. No extensions of time under the provisions of 37 CFR 1.136 (a) were obtained. Accordingly, the application became abandoned on April 28, 2006.

A grantable petition under 37 CFR 1.137(b) must be accompanied by: (1) the required reply, unless previously filed; (2) the petition fee as set forth in 37 CFR 1.17(m); (3) a statement that the entire delay in filing the required reply from the due date for the reply until the filing of a grantable petition pursuant to 37 CFR 1.137(b) was unintentional; and (4) any terminal disclaimer (and fee as set forth in 37 CFR 1.20(d)) required by 37 CFR 1.137(d). Where there is a question as to whether either the abandonment or the delay in filing a petition under 37 CFR 1.137 was unintentional, the Director may require additional information. *See* MPEP 711.03(c)(II)(C) and (D).

There are three periods to be considered during the evaluation of a petition under 37 CFR 1.137(b):

(1) the delay in reply that originally resulted in the abandonment;

(2) the delay in filing an initial petition pursuant to 37 CFR 1.137(b) to revive the application; and

(3) the delay in filing a grantable petition pursuant to 37 CFR 1.137(b) to revive the application.

Currently, the delay has not been shown to the satisfaction of the Director to be unintentional for periods (1) and (2).

As to Period (1):

The patent statute at 35 U.S.C. § 41(a)(7) authorizes the Director to revive an "unintentionally abandoned application." The legislative history of Public Law 97-247 reveals that the purpose of 35 U.S.C. § 41(a)(7) is to permit the Office to have more discretion than in 35 U.S.C. §§ 133 or 151 to revive abandoned applications in appropriate circumstances, but places a limit on this discretion, stating that "under this section a petition accompanied by either a fee of $500 or a fee of $50 **would not be granted where the abandonment** or the failure to pay the fee for issuing the patent **was intentional** as opposed to being unintentional or unavoidable." [emphasis added]. See H.R. Rep. No. 542, 97th Cong., 2d Sess. 6-7 (1982), *reprinted in* 1982 U.S.C.C.A.N. 770-71. The revival of an intentionally abandoned application is antithetical to the meaning and intent of the statute and regulation.

35 U.S.C. § 41(a)(7) authorizes the Director to accept a petition "for the revival of an unintentionally abandoned application for a patent." As amended December 1, 1997, 37 CFR 1.137(b)(3) provides that a petition under 37 CFR 1.137(b) must be accompanied by a statement that the delay was unintentional, but provides that "[t]he Commissioner may require additional information where there is a question whether the delay was unintentional." Where, as here, there is a question whether the initial delay was unintentional, the petitioner must meet the burden of establishing that the delay was unintentional within the meaning of 35 U.S.C. § 41(a)(7) and 37 CFR 1.137(b). *See* In re Application of G, 11 USPQ2d 1378, 1380 (Comm'r Pats. 1989); 37 CFR 1.137(b). Here, in view of the inordinate delay (over 2 years) in resuming prosecution, there is a question whether the entire delay was unintentional. Petitioner should note that the issue is not whether some of the delay was unintentional by any party; rather, the issue is whether the entire delay has been shown to the satisfaction of the Director to be unintentional.

The question under 37 CFR 1.137(b) for period (1) is whether the delay on the part of the party having the right or authority to reply to avoid abandonment (or not reply) was unintentional. Accordingly, any renewed petition must clearly identify the party having the right to reply to avoid abandonment on April 28, 2008. That party, in turn must explain what effort(s) was made to further reply to the outstanding Office action and, further, why no reply was filed. If no effort was made to further reply, then that party must explain why the delay in this application does not result from a deliberate course of action (or inaction). Likewise, as Brian C. Kelly, Ltd. was counsel of record at the time of abandonment, they should explain why this application became abandoned while it was under their control and what efforts they made to further reply of itself and with whom this matter was discussed. Copies of any correspondence relating to the filing, or to not filing a further reply to the outstanding Office action are required from responsible person(s), and whoever else was involved with this application at the time of abandonment. Statements are required from any and all person(s) having firsthand knowledge of the circumstances surrounding the lack of a reply to the outstanding Office action. As the courts have made clear, it is pointless for the USPTO to revive a long abandoned application without an adequate showing that the delay did not result from a deliberate course of action. *See* Lawman Armor v. Simon, 2005 U.S. Dist. LEXIS 10843, 74 USPQ2d 1633 (DC EMich 2005); Field Hybrids, LLC v. Toyota Motor Corp., 2005 U.S. Dist. LEXIS 1159 (D. Minn Jan. 27, 2005); Lumenyte Int'l Corp. v. Cable Lite Corp., Nos. 96-1011, 96-1077, 1996 U.S. App. LEXIS 16400, 1996 WL 383927 (Fed. Cir. July 9, 1996) (unpublished) (patents held unenforceable due to a finding of inequitable conduct in submitting an inappropriate statement that the abandonment was unintentional).

As to Period (2):

Likewise, where the applicant deliberately chooses not to seek or persist in seeking the revival of an abandoned application, or where the applicant deliberately chooses to delay seeking the revival of an abandoned application, the resulting delay in seeking revival of the abandoned application cannot be considered as "unintentional" within the meaning of 37 CFR 1.137(b). *See* MPEP 711.03(c).

The language of both 35 U.S.C. § 41(a)(7) and 37 CFR 1.137(b) are clear and unambiguous, and, furthermore, without qualification. That is, the delay in filing the reply during prosecution, as well as in filing the petition seeking revival, must have been, without qualification, "unintentional" for the reply to now be accepted on petition. The Office requires that the entire delay be at least unintentional as a prerequisite to revival of an abandoned application to prevent abuse and injury to the public. *See* H.R. Rep. No. 542, 97th Cong., 2d Sess. 7 (1982), reprinted in 1982 U.S.C.C.A.N. 771 ("[i]n order to prevent abuse and injury to the public the Commissioner . . . could require applicants to act promptly after becoming aware of the abandonment"). The December 1997 change to 37 CFR 1.137 did not create any new right to overcome an intentional delay in seeking revival, or in renewing an attempt at seeking revival, of an abandoned application. *See* Changes to Patent Practice and Procedure; Final Rule Notice, 62 Fed. Reg. 53131, 53160 (October 10, 1997), 1203 Off. Gaz. Pat. Office 63, 87 (October 21, 1997), which clearly stated that any protracted delay (over 2 years) could trigger, as here, a request for additional information. As the courts have since made clear, a protracted delay in seeking revival, as here, requires a petitioner's detailed explanation seeking to excuse the delay as opposed to USPTO acceptance of a general allegation of unintentional delay. *See* Lawman Armor v. Simon, 2005 U.S. Dist. LEXIS 10843, 74 USPQ2d 1633, at 1637-8 (DC EMich 2005); Field Hybrids, LLC v. Toyota Motor Corp., 2005 U.S. Dist. LEXIS 1159 (D. Minn Jan. 27, 2005) at *21-*23. Statements are required from any and all persons then at Brian C. Kelly, Ltd. and the responsible person(s) having firsthand knowledge of the circumstances surrounding the protracted delay, after the abandonment date, in seeking revival.

As noted in MPEP 711.03(c)(II), subsection D, in instances in which such petition was not filed within 1 year of the date of abandonment of the application, applicants should include:

> (A) the date that the applicant first became aware of the abandonment of the application; and
> (B) a showing as to how the delay in discovering the abandoned status of the application occurred despite the exercise of due care or diligence on the part of the applicant.

In either instance, applicant's failure to carry the burden of proof to establish that the "entire" delay was "unavoidable" or "unintentional" may lead to the denial of a petition under 37 CFR 1.137(b), regardless of the circumstances that originally resulted in the abandonment of the application. *See also* New York University v. Autodesk, 2007 U.S. DIST LEXIS, U.S.District LEXIS 50832, *10 -*12 (S.D.N.Y. 2007)(protracted delay in seeking revival undercuts assertion of unintentional delay).

Any renewed petition may be addressed as follows:

By Mail: Mail Stop PETITION
Commissioner for Patents
P. O. Box 1450
Alexandria, VA 22313-1450

By hand: U. S. Patent and Trademark Office
Customer Service Window, Mail Stop Petitions
Randolph Building
401 Dulany Street
Alexandria, VA 22314

The centralized facsimile number is **(571) 273-8300.**

Correspondence regarding this decision may also be filed through the electronic filing system of the USPTO.

To expedite consideration, petitioner may wish to contact the undersigned regarding the filing of the renewed petition under 37 CFR 1.137(b).

Telephone inquiries concerning this decision should be directed to Denise Williams at (571) 272-8930.

Brian Brown
Petitions Examiner
Office of Petitions

UNITED STATES PATENT AND TRADEMARK OFFICE

Commissioner for Patents
United States Patent and Trademark Office
P.O. Box 1450
Alexandria, VA 22313-1450
www.uspto.gov

JOHN W. CROSBY
1650 HIGHWAY 395
MINDEN NV 89423

MAILED

APR 0 8 2009

OFFICE OF PETITIONS

In re Application of	:	
John P. Kallestad	:	
Application No. 10/789,388	:	DECISION ON PETITION
Filed: February 28, 2004	:	
Attorney Docket No. DC1-001	:	

This is a decision on the renewed petition under the unintentional provisions of 37 CFR 1.137(b), filed January 5, 2009, to revive the above-identified application.

The petition is **GRANTED**.

The petition satisfies the conditions for revival pursuant to the provisions of 37 CFR 1.137(b) in that (1) the reply in the form of an amendment; (2) the petition fee; and (3) the required statement of unintentional delay have been received. Accordingly, the reply to the nonfinal rejection mailed January 27, 2006, is accepted as having been unintentionally delayed.

Telephone inquiries concerning this decision should be directed to the undersigned at (571) 272-3208.

This application is being referred to Technology Center AU 2841 for appropriate action by the Examiner in the normal course of business on the reply received January 5, 2009.

Karen Creasy
Petitions Examiner
Office of Petitions

UNITED STATES PATENT AND TRADEMARK OFFICE

Commissioner for Patents
United States Patent and Trademark Office
P.O. Box 1450
Alexandria, VA 22313-1450
www.uspto.gov

WELLS ST. JOHN
601 W. FIRST AVENUE, SUITE 1300
SPOKANE WA 99201

COPY MAILED

AUG 16 2005

OFFICE OF PETITIONS

In re Application of :
Craig L. Shaber et al :
Application No. 10/789,391 :
Filed: February 28, 2004 :
Attorney Docket No. WA40-030 :

ON PETITION

This is a decision on the petition, filed August 9, 2005, under 37 CFR 1.313(c)(2) to withdraw the above-identified application from issue after payment of the issue fee.

The petition is **GRANTED**.

The above-identified application is withdrawn from issue for consideration of a submission under 37 CFR 1.114 (request for continued examination). See 37 CFR 1.313(c)(2).

Petitioner is advised that the issue fee paid on July 12, 2005 in the above-identified application cannot be refunded. If, however, the above-identified application is again allowed, petitioner may request that it be applied towards the issue fee required by the new Notice of Allowance.[1]

Telephone inquiries should be directed to the undersigned at (571) 272-3208.

The examiner of Technology Center AU 1725 will consider the request for continued examination under 37 CFR 1.114.

Karen Creasy

Karen Creasy
Petitions Examiner
Office of Petitions
Office of the Deputy Commissioner
for Patent Examination Policy

---

[1] The request to apply the issue fee to the new Notice may be satisfied by completing and returning the new Issue Fee Transmittal Form PTOL-85(b), which includes the following language thereon: "Commissioner for Patents is requested to apply the Issue Fee and Publication Fee (if any) or re-apply any previously paid issue fee to the application identified above." Petitioner is advised that, whether a fee is indicated as being due or not, the Issue Fee Transmittal Form **must** be completed and timely submitted to avoid abandonment. Note the language in bold text on the first page of the Notice of Allowance and Fee(s) Due (PTOL-85).

SPE RESPONSE FOR CERTIFICATE OF CORRECTION

Paper No.: _____

DATE : 12/30/08

TO SPE OF : ART UNIT 2626

SUBJECT : Request for Certificate of Correction for Appl. No.: 10789397 Patent No.: 7359860 B1

Please respond to this request for a certificate of correction within 7 days.

FOR IFW FILES:

Please review the requested changes/corrections as shown in the **COCIN** document(s) in the IFW application image. No new matter should be introduced, nor should the scope or meaning of the claims be changed.

Please complete the response (see below) and forward the completed response to scanning using document code **COCX**.

FOR PAPER FILES:

Please review the requested changes/corrections as shown in the attached certificate of correction. Please complete this form (see below) and forward it with the file to:

Certificates of Correction Branch (CofC)
South Tower - 9A22
Palm Location 7580
You can fax the Directors/SPE response to 571-270-9990

_____
Certificates of Correction Branch
703-308-9390 ext. _____

Thank You For Your Assistance

The request for issuing the above-identified correction(s) is hereby:
Note your decision on the appropriate box.

- ☑ **Approved** — **All** changes apply.
- ☐ **Approved in Part** — Specify below which changes **do not** apply.
- ☐ **Denied** — State the reasons for denial below.

Comments: _____

David Hudspeth 2626

SPE RESPONSE FOR CERTIFICATE OF CORRECTION

SPE Art Unit

UNITED STATES PATENT AND TRADEMARK OFFICE

Commissioner for Patents
United States Patent and Trademark Office
P.O. Box 1450
Alexandria, VA 22313-1450
www.uspto.gov

BIRCH, STEWART, KOLASCH & BIRCH, LLP
P.O. BOX 747
FALLS CHURCH, VA 22040-0747

COPY MAILED

JAN 04 2010

In re Application of
Peter L. Collins et al.
Application No. 10/789,400
Filed: February 27, 2004
Attorney Docket No. **NIHB-2428**

DECISION ON PETITION
TO WITHDRAW
FROM RECORD

This is a decision on the Request to Withdraw as attorney or agent of record under 37 CFR. § 1.36(b), filed November 4, 2009.

The request is **NOT APPROVED** as moot.

A review of the file record indicates that the power of attorney to attorneys/agents associated with Customer Number 02292 has been revoked by the applicants of the patent application on October 13, 2009. Accordingly, the request to withdraw under 37 CFR § 1.36(b) is moot.

All future communications from the Office will continue to be directed to the below-listed address until otherwise notified by applicant.

Telephone inquires concerning this decision should be directed to the undersigned at 571-272-4584.

JoAnne Burke
Petitions Examiner
Office of Petitions

cc: WOODCOCK WASHBURN LLP
CIRA CENTRE, 12TH FLOOR
2929 ARCH STREET
PHILADELPHIA PA 19104-2891

UNITED STATES PATENT AND TRADEMARK OFFICE

COMMISSIONER FOR PATENTS
UNITED STATES PATENT AND TRADEMARK OFFICE
P.O. BOX 1450
ALEXANDRIA, VA 22313-1450
www.uspto.gov

SALIWANCHIK LLOYD & SALIWANCHIK
A PROFESSIONAL ASSOCIATION
PO BOX 142950
GAINESVILLE FL 32614-2950

COPY MAILED

DEC 10 2007

OFFICE OF PETITIONS

In re Application of :
Crisanti :
Application No. 10/789,403 : DECISION ON PETITION
Filed: February 27, 2004 :
Attorney Docket No. GJE-39D :

This is a decision on the petition under the unintentional provisions of 37 CFR 1.137(b), filed October 2, 2007, to revive the above-identified application.

The petition is **DISMISSED.**

Any request for reconsideration of this decision must be submitted within TWO (2) MONTHS from the mail date of this decision. Extensions of time under 37 CFR 1.136(a) are permitted. The reconsideration request should include a cover letter entitled "Renewed Petition under 37 CFR 1.137(b)." This is **not** a final agency action within the meaning of 5 U.S.C. § 704.

The application became abandoned June 21, 2004 for failure to timely submit a proper reply to the Notice of Omitted Item(s) in a Nonprovisional Application (Notice) mailed April 20, 2004. The Notice set a two month shortened statutory period of time for reply. No petition for extension of time was timely submitted. Notice of Abandonment was mailed January 18, 2005

A grantable petition under 37 CFR 1.137(b) must be accompanied by: (1) the required reply, unless previously filed; (2) the petition fee as set forth in 37 CFR 1.17(m); (3) a statement that the entire delay in filing the required reply from the due date for the reply until the filing of a grantable petition pursuant to 37 CFR 1.137(b) was unintentional; and (4) any terminal disclaimer (and fee as set forth in 37 CFR 1.20(d)) required by 37 CFR 1.137(d). Where there is a question as to whether either the abandonment or the delay in filing a petition under 37 CFR 1.137 was unintentional, the Director may require additional

information. *See*, MPEP 711.03(c)(II)(C) and (D). The instant petition lacks item (3).

There are three periods to be considered during the evaluation of a petition under 37 CFR 1.137(b):

> (1) the delay in reply that originally resulted in the abandonment;
>
> (2) the delay in filing an initial petition pursuant to 37 CFR 1.137(b) to revive the application; and
>
> (3) the delay in filing a grantable petition pursuant to 37 CFR 1.137(b) to revive the application.

Currently, the delay has not been shown to the satisfaction of the Director to be unintentional for periods (1) and (2).

As to Period (1):

The patent statute at 35 U.S.C. § 41(a)(7) authorizes the Director to revive an "unintentionally abandoned application." The legislative history of Public Law 97-247 reveals that the purpose of 35 U.S.C. § 41(a)(7) is to permit the Office to have more discretion than in 35 U.S.C. §§ 133 or 151 to revive abandoned applications in appropriate circumstances, but places a limit on this discretion, stating that "[u]nder this section a petition accompanied by either a fee of $500 or a fee of $50 **would not be granted where the abandonment** or the failure to pay the fee for issuing the patent **was intentional** as opposed to being unintentional or unavoidable." [emphasis added]. See H.R. Rep. No. 542, 97th Cong., 2d Sess. 6-7 (1982), *reprinted in* 1982 U.S.C.C.A.N. 770-71. The revival of an intentionally abandoned application is antithetical to the meaning and intent of the statute and regulation.

35 U.S.C. § 41(a)(7) authorizes the Director to accept a petition "for the revival of an unintentionally abandoned application for a patent." As amended December 1, 1997, 37 CFR 1.137(b)(3) provides that a petition under 37 CFR 1.137(b) must be accompanied by a statement that the delay was unintentional, but provides that "[t]he Commissioner may require additional information where there is a question whether the delay was unintentional." Where, as here, there is a question whether the initial delay was unintentional, the petitioner must meet the burden of establishing that the delay was unintentional within the meaning of 35 U.S.C. § 41(a)(7) and 37 CFR 1.137(b). *See* In

re Application of G, 11 USPQ2d 1378, 1380 (Comm'r Pats. 1989); 37 CFR 1.137(b). Here, in view of the inordinate delay (more than three years) in resuming prosecution, there is a question whether the entire delay was unintentional. Petitioner should note that the issue is not whether some of the delay was unintentional by any party; rather, the issue is whether the entire delay has been shown to the satisfaction of the Director to be unintentional.

The question under 37 CFR 1.137(b) for period (1) is whether the delay on the part of the party having the right or authority to reply to avoid abandonment (or not reply) was unintentional. Accordingly, any renewed petition must clearly identify the party having the right to reply to avoid abandonment on June 21, 2004. That party, in turn must explain what effort(s) was made to further reply to the outstanding Office action and, further, why no reply was filed. If no effort was made to further reply, then that party must explain why the delay in this application does not result from a deliberate course of action (or inaction). Likewise, as practitioners at Saliwanchik, Lloyd & Saliwanchik were counsel of record at the time of abandonment, said practitioners should explain why this application became abandoned while it was under their control and what efforts were made to further reply and with whom this matter was discussed. Copies of any correspondence relating to the filing, or to not filing a further reply to the outstanding Office action are required from responsible person(s), applicant, and whoever else was involved with this application at the time of abandonment. Statements are required from any and all persons then involved with this application at the time of abandonment, and the responsible person(s) having firsthand knowledge of the circumstances surrounding the lack of a reply to the outstanding Office action. As the courts have made clear, it is pointless for the USPTO to revive a long abandoned application without an adequate showing that the delay did not result from a deliberate course of action. *See* Lawman Armor v. Simon, 2005 U.S. Dist. LEXIS 10843, 74 USPQ2d 1633 (DC EMich 2005); Field Hybrids, LLC v. Toyota Motor Corp., 2005 U.S. Dist. LEXIS 1159 (D. Minn Jan. 27, 2005); Lumenyte Int'l Corp. v. Cable Lite Corp., Nos. 96-1011, 96-1077, 1996 U.S. App. LEXIS 16400, 1996 WL 383927 (Fed. Cir. July 9, 1996) (unpublished) (patents held unenforceable due to a finding of inequitable conduct in submitting an inappropriate statement that the abandonment was unintentional).

As to Period (2):

Likewise, where the applicant deliberately chooses not to seek or persist in seeking the revival of an abandoned application, or where the applicant deliberately chooses to delay seeking the revival of an abandoned application, the resulting delay in seeking revival of the abandoned application cannot be considered

as "unintentional" within the meaning of 37 CFR 1.137(b). *See* MPEP 711.03(c).

The language of both 35 U.S.C. § 41(a)(7) and 37 CFR 1.137(b) are clear and unambiguous, and, furthermore, without qualification. That is, the delay in filing the reply during prosecution, as well as in filing the petition seeking revival, must have been, without qualification, "unintentional" for the reply to now be accepted on petition. The Office requires that the entire delay be at least unintentional as a prerequisite to revival of an abandoned application to prevent abuse and injury to the public. *See* H.R. Rep. No. 542, 97th Cong., 2d Sess. 7 (1982), reprinted in 1982 U.S.C.C.A.N. 771 ("[i]n order to prevent abuse and injury to the public the Commissioner . . . could require applicants to act promptly after becoming aware of the abandonment"). The December 1997 change to 37 CFR 1.137 did not create any new right to overcome an intentional delay in seeking revival, or in renewing an attempt at seeking revival, of an abandoned application. *See* Changes to Patent Practice and Procedure; Final Rule Notice, 62 Fed. Reg. 53131, 53160 (October 10, 1997), 1203 Off. Gaz. Pat. Office 63, 87 (October 21, 1997), which clearly stated that any protracted delay (here, over three years) could trigger, as here, a request for additional information. As the courts have since made clear, a protracted delay in seeking revival, as here, requires a petitioner's detailed explanation seeking to excuse the delay as opposed to USPTO acceptance of a general allegation of unintentional delay. *See* Lawman Armor v. Simon, 2005 U.S. Dist. LEXIS 10843, 74 USPQ2d 1633, at 1637-8 (DC EMich 2005); Field Hybrids, LLC v. Toyota Motor Corp., 2005 U.S. Dist. LEXIS 1159 (D. Minn Jan. 27, 2005) at *21-*23. Statements are required from any and all persons then involved with this application, including but not limited to current counsel, prior counsel, applicant(s), and/or assignee(s), at the time of abandonment and the responsible person(s) having firsthand knowledge of the circumstances surrounding the protracted delay, after the abandonment date, in seeking revival.

As noted in MPEP 711.03(c)(II), subsection D, in instances in which such petition was not filed within 1 year of the date of abandonment of the application, applicants should include:

> (A) the date that the applicant first became aware of the abandonment of the application; and
> (B) a showing as to how the delay in discovering the abandoned status of the application occurred despite the exercise of due care or diligence on the part of the applicant.

In either instance, applicant's failure to carry the burden of proof to establish that the "entire" delay was "unavoidable" or

"unintentional" may lead to the denial of a petition under 37 CFR 1.137(b), regardless of the circumstances that originally resulted in the abandonment of the application. *See also* New York University v. Autodesk, 2007 U.S. DIST LEXIS, U.S.District LEXIS 50832, *10 -*12 (S.D.N.Y. 2007)(protracted delay in seeking revival undercuts assertion of unintentional delay).

Any renewed petition may be addressed as follows:

By Mail: Mail Stop PETITION
Commissioner for Patents
P. O. Box 1450
Alexandria, VA 22313-1450

By hand: U. S. Patent and Trademark Office
Customer Service Window, Mail Stop Petitions
Randolph Building
401 Dulany Street
Alexandria, VA 22314

The centralized facsimile number is **(571) 273-8300.**

Correspondence regarding this decision may also be filed through the electronic filing system of the USPTO.

To expedite consideration, petitioner may wish to contact the undersigned regarding the filing of the renewed petition under 37 CFR 1.137(b).

There is no indication that the petition is signed by a registered patent attorney or patent agent of record. However, in accordance with 37 CFR 1.34, the signature of Ms. Haile appearing on the correspondence shall constitute a representation to the United States Patent and Trademark Office that she is authorized to represent the particular party in whose behalf she acts. If, Ms. Haile desires to receive correspondence regarding this file, the appropriate power of attorney documents must be submitted. A courtesy copy of this decision is being mailed to Ms. Haile, the petitioner herein. However, until otherwise instructed, all future correspondence regarding this application file will be directed solely to the above-noted correspondence address of record.

Telephone inquiries concerning this decision should be directed to the undersigned at (571) 272-3205.

Alesia M. Brown
Office of Petitions

CC: Lisa Haile
DLA Piper Rudnick Gray Cary US LLP
4365 Executive Drive Suite 1100
San Diego, CA 92121--213

UNITED STATES PATENT AND TRADEMARK OFFICE

Commissioner for Patents
United States Patent and Trademark Office
P.O. Box 1450
Alexandria, VA 22313-1450
www.uspto.gov

COPY MAILED

SEP 02 2008

SALIWANCHIK LLOYD & SALIWANCHIK
A PROFESSIONAL ASSOCIATION
PO BOX 142950
GAINESVILLE FL 32614-2950

In re Application of :
Crisanti :
Application No. 10/789,403 : DECISION ON PETITION
Filed: February 27, 2004 :
Attorney Docket No. GJE-39D :

This is a decision on the renewed petition under the unintentional provisions of 37 CFR 1.137(b), filed July 10, 2008, to revive the above-identified application.

The petition is **GRANTED**.

The application became abandoned June 21, 2004 for failure to timely submit a proper reply to the Notice of Omitted Item(s) in a Nonprovisional Application (Notice) mailed April 20, 2004. The Notice set a two month shortened statutory period of time for reply. No petition for extension of time was timely submitted. Notice of Abandonment was mailed January 18, 2005. A petition under 37 CFR 1.137(b) was filed October 1, 2007 and dismissed December 10, 2007.

A grantable petition under 37 CFR 1.137(b) must be accompanied by: (1) the required reply, unless previously filed; (2) the petition fee as set forth in 37 CFR 1.17(m); (3) a statement that the entire delay in filing the required reply from the due date for the reply until the filing of a grantable petition pursuant to 37 CFR 1.137(b) was unintentional; and (4) any terminal disclaimer (and fee as set forth in 37 CFR 1.20(d)) required by 37 CFR 1.137(d).

The instant petition has been carefully reviewed and found in compliance with the above set forth requirements.

This application is being directed to the Office of Patent Application Processing for further processing.

Alesia M. Brown
Petitions Attorney
Office of Petitions

UNITED STATES PATENT AND TRADEMARK OFFICE

Commissioner for Patents
United States Patent and Trademark Office
P.O. Box 1450
Alexandria, VA 22313-1450
www.uspto.gov

COPY MAILED

NOV 0 1 2006

OFFICE OF PETITIONS

Martin & Henson, P.C.
9250 W. 5th Avenue
Suite 200
Lakewood, CO 80226

In re Application of :

Sandra E. Ring et al. :
Application No. 10/789,413 : DECISION ON PETITION
Filed: February 27, 2004 : TO WITHDRAW
Attorney Docket No. 2038 : FROM RECORD
:

This is a decision on the Request to Withdraw as attorney or agent of record under 37 C.F.R. § 1.36(b), filed August 1, 2006.

The request is **APPROVED**.

A grantable request to withdraw as attorney/agent of record must be signed by every attorney/agent seeking to withdraw or contain a clear indication that one attorney is signing on behalf of another/others. A request to withdraw will not be approved unless at least 30 (thirty) days would remain between the date of approval and the later of the expiration date of a time to file a response or the expiration date of the maximum time period which can be extended under 37 C.F.R. § 1.136(a).

The request was signed by Michael R. Henson on behalf of all attorneys of record who are associated with Customer No. 24264.

All attorneys/agents associated with the Customer No. 24264 have been withdrawn.

Applicant is reminded that there is no attorney of record at this time.

The request to change the correspondence of record is not acceptable as the requested correspondence address is not that of: (1) the first named signing inventor; or (2) an intervening assignee of the entire interest under 37 C.F.R 3.71. All future communications from the Office will be directed to the first named signing inventor at the first copied address below until otherwise properly notified by the applicant.

There is no outstanding Office action at this time.

Telephone inquiries concerning this decision should be directed to Terri Williams at 571-272-2991.

Terri Williams

David Bucci
Petitions Examiner
Office of Petitions

cc: **Sandra E. Ring**
9 Forest Street
Alexandria, VA 22305

cc: **Sytex, Inc.**
c/o Barbara Loscalzo
Lockheed Martin Information & Technology Services
2339 Route 70 West
Cherry Hill, NJ 08002

UNITED STATES PATENT AND TRADEMARK OFFICE

UNITED STATES DEPARTMENT OF COMMERCE
United States Patent and Trademark Office
Address: COMMISSIONER FOR PATENTS
P.O. Box 1450
Alexandria, Virginia 22313-1450
www.uspto.gov

APPLICATION NUMBER	FILING OR 371 (c) DATE	FIRST NAMED APPLICANT	ATTY. DOCKET NO./TITLE
10/789,413	02/27/2004	Sandra E. Ring	2038

CONFIRMATION NO. 5254

OC000000021030410

OC000000021030410

24264
MARTIN & HENSON, P.C.
9250 W 5TH AVENUE
SUITE 200
LAKEWOOD, CO 80226

Date Mailed: 10/30/2006

NOTICE REGARDING CHANGE OF POWER OF ATTORNEY

This is in response to the Power of Attorney filed 08/01/2006.

- The withdrawal as attorney in this application has been accepted. Future correspondence will be mailed to the new address of record. 37 CFR 1.33.

Terri S. Williams

TERRI S WILLIAMS
OP (571) 272-2991

FORMER ATTORNEY/AGENT COPY

UNITED STATES PATENT AND TRADEMARK OFFICE

Commissioner for Patents
United States Patent and Trademark Office
P.O. Box 1450
Alexandria, VA 22313-1450
www.uspto.gov

HELLER EHRMAN LLP
4350 LA JOLLA VILLAGE DRIVE
7TH FLOOR
SAN DIEGO CA 92122

COPY MAILED

JUL 3 1 2008

In re Application of :

NAGALLA, Srinivasa et all. :
Application No. 10/789,424 : DECISION ON PETITION
Filed: February 27, 2004 : TO WITHDRAW
Attorney Docket No. 39767-0003 : FROM RECORD
:

This is a decision on the Request to Withdraw as attorney or agent of record under 37 C.F.R. § 1.36(b), filed July 17, 2008.

The request is **APPROVED**.

A grantable request to withdraw as attorney/agent of record must be signed by every attorney/agent seeking to withdraw or contain a clear indication that one attorney is signing on behalf of another/others. A request to withdraw will not be approved unless at least 30 (thirty) days would remain between the date of approval and the later of the expiration date of a time to file a response or the expiration date of the maximum time period which can be extended under 37 C.F.R. § 1.136(a).

The request was signed by Leslie Overman on behalf of all attorneys of record who are associated with customer No. 25213. All attorneys/agents associated with the Customer Number 25213 have been withdrawn. Applicant is reminded that there is no attorney of record at this time.

The request to change the correspondence.of record is not acceptable as the requested correspondence address is not that of: (1) the first named signing inventor; or (2) an intervening assignee of the entire interest under 37 C.F.R 3.71. All future communications from the Office will be directed to the first named signing inventor at the first copied address below until otherwise properly notified by the applicant.

Telephone inquiries concerning this decision should be directed to Tredelle Jackson at 571-272-2783.

Tredelle D. Jackson
Petitions Examiner
Office of Petitions

cc: **SRINIVASA NAGALLA**
30100 SW LAUREL ROAD
HILLSBORO OR 97123

cc: **GOODWIN PROCTER LLP**
ATTN: PATENT ADMINISTRATOR
135 COMMONWEALTH DRIVE
MENLO PARK, CA 94025-1105

UNITED STATES PATENT AND TRADEMARK OFFICE

Commissioner for Patents
United States Patent and Trademark Office
P.O. Box 1450
Alexandria, VA 22313-1450
www.uspto.gov

GOODWIN PROCTER LLP
ATTN: PATENT ADMINISTRATOR
135 COMMONWEALTH DRIVE
MENLO PARK CA 94025-1105

MAILED

APR 26 2010

OFFICE OF PETITIONS

In re Application of	:	
Nagalla et al.	:	DECISION ON PETITION
Application No. 10/789,424	:	TO WITHDRAW
Filed: February 27, 2004	:	FROM RECORD
Attorney Docket No. PTX-0003	:	

This is a decision on the Request to Withdraw as attorney or agent of record under 37 C.F.R. § 1.36(b), filed February 25, 2010.

The request is **APPROVED**.

A grantable request to withdraw as attorney/agent of record must be signed by every attorney/agent seeking to withdraw or contain a clear indication that one attorney is signing on behalf of another/others. The Office will require the practitioner(s) to certify that he, she or they have: (1) given reasonable notice to the client, prior to the expiration of the reply period, which the practitioner(s) intends to withdraw from employment; (2) delivered to the client or a duly authorized representative of the client all papers and property (including funds) to which the client is entitled; and (3) notified the client of any replies that may be due and the time frame within which the client must respond, pursuant to 37 CFR 10.40 (c).

The request was signed by Paul Davis on behalf of all attorneys of record who are associated with Customer No. 77845.

All attorneys/agents associated with Customer Number 77845 have been withdrawn. Applicant is reminded that there is no attorney of record at this time.

All future correspondence will be directed to the assignee at the address indicated below.

Currently, a Notice of Abandonment was mailed March 16, 2010 in the above-identified application.

Telephone inquires concerning this decision should be directed to the undersigned at (571) 272-7751. All other inquires concerning either the examination or status of the application should be directed to the Technology Center.

Joan Olszewski

Joan Olszewski
Petitions Examiner
Office of Petitions

cc: Proteogenix, Inc.
3181 SW Sam Jackson Park Road
Portland, OR 97239

UNITED STATES PATENT AND TRADEMARK OFFICE

COMMISSIONER FOR PATENTS
UNITED STATES PATENT AND TRADEMARK OFFICE
P.O. BOX 1450
ALEXANDRIA, VA 22313-1450
www.uspto.gov

JJGJr: 09-04

Paper No: __

GERALD F. SWISS
FOLEY & LARDNER LLP
THREE PALO ALTO SQUARE
3000 EL CAMINO REAL, SUITE 100
PALO ALTO CA 94306-2121

COPY MAILED

SEP 14 2004

OFFICE OF PETITIONS

In re Application of :
Patterson, et al. :
Application No. 10/789,436 : DECISION ON PETITION
Filed: 26 February, 2004 :
Attorney Docket No.: 554922009300 :

This is a decision on the petition filed on 12 July, 2004, to correct the Express Mail filing date under 37 C.F.R. §1.10, and seeking for the above-identified application a filing date of 26 February, 2004, instead of the presently accorded filing date of 27 February, 2004.

The petition is **GRANTED**, and the petition fee is waived.

NOTE: **Petitioner's attention is directed to the listing on the instant petition setting forth Gerald A. Gutter as the first named inventor, rather than William R. Patterson.**

BACKGROUND AND ANALYSIS

The record reflects that:

- the instant application was received on 27 February, 2004, and given a filing date of 27 February, 2004; and

- Petitioner William H. Benz (Reg. No. 25,952) submits a petition and statement, and supplements the pleadings with, *inter alia*, a copy of the US Postal Service (USPS)

Express Mail label bearing Label No. ER828471911US, which number also appears on the first/transmittal page of the application; and

- the label exhibits a "Date In" of "2/26/04" and a date stamp "FEB 26 04."
-

(Petitioner may find that the Track and Confirm printout from the USPS website a valuable practice in support of petitions such as this–particularly when documents such as the mail label are unavailable or yield poor reproductions.)

CONCLUSION

Therefore, as to the instant nonprovisional application, Application No. 10/789,436, the Office of Initial Patent Examination is specifically instructed to:

- assign a filing date of 26 February, 2004; and
- issue a filing receipt specifying the filing date as that of 26 February, 2004.

The instant application is released to OIPE to be handled as set forth above before being forwarded for examination in due course.

Telephone inquiries concerning this decision may be directed to the undersigned at (703) 305-9199.

John J. Gillon, Jr.
Senior Attorney
Office of Petitions

UNITED STATES PATENT AND TRADEMARK OFFICE

Commissioner for Patents
United States Patent and Trademark Office
P.O. Box 1450
Alexandria, VA 22313-1450
www.uspto.gov

Paper No.

PERKINS COIE LLP
P.O. BOX 2168
MENLO PARK, CA 94026

COPY MAILED

APR 19 2005

OFFICE OF PETITIONS

In re Application of Alexandre Baptiste Application No. 10/789,451 Filed: February 26, 2004 Attorney Docket No. 37469-8041.US01 Title: VACUUM PACKAGING APPLIANCE WITH REMOVABLE TROUGH	DECISION ACCORDING STATUS UNDER 37 C.F.R. § 1.47(b)

This is in response to the "Petition by Person Having Proprietary Interest to File Application on Behalf of Inventor Alexandre Baptiste Who Refuses to Sign" filed November 22, 2004.

The petition is **DISMISSED**.

Rule 47 applicant is given TWO MONTHS from the mailing date of this decision to reply, correcting the below-noted deficiencies. Any reply should be entitled "Request for Reconsideration of Petition Under 37 CFR §1.47(b)," and should only address the deficiencies noted below, except that the reply may include an oath or declaration executed by the non-signing inventor. **Failure to respond will result in abandonment of the application.** Any extensions of time will be governed by 37 CFR §1.136(a).

The above-identified application was filed on February 26, 2004, naming Alexandre Baptiste as sole inventor, but without an executed oath or declaration; missing the statutory basic filing fee; with additional claim fees due; and requiring replacement drawings. Accordingly, on May 19, 2004, the Office mailed a Notice to File Missing Parts of Application requiring those items, as well as, the late oath or declaration surcharge. The petition set a two-month period for reply with extensions of time obtainable under § 1.136(a).

On November 22, 2004 (certificate of mailing November 19, 2004), applicants responded with a check in the amount of $2,990 (for petition fee, statutory basic filing fee, additional claim fees, late surcharge and extension of time within the fourth month); the instant petition and declaration executed by the assignee. Rule 47 applicant petitions for assignee Tilia International, Inc., to file the above-identified application on behalf of inventor Baptiste. Applicant asserts that such status under 37 CFR § 1.47(b) is proper because sole inventor Baptiste has refused to join in the application.

A grantable petition under 37 CFR § 1.47(b) requires: (1) an acceptable oath or declaration in compliance with 37 CFR §§ 1.63 and 1.64 or 1.175; (2) that the rule 47 applicant state his or her relationship to the inventor as required by 37 CFR § 1.64; (3) proof that the non-signing inventor cannot be found or reached after diligent effort, or refuses to sign the oath or declaration after having been presented with the application papers (specification, claims and drawings); (4) the petition fee; (5) a statement of the last known address of the non-signing inventor; (6) that rule 47 applicant make out a *prima facie* case (i) that the invention has been assigned to him or her or (ii) that the inventor has agreed in writing to assign the invention to him or her or (iii) otherwise demonstrate a proprietary interest in the subject matter of the invention; and (7) that rule 47 applicant prove that the filing of the application is necessary (i) to preserve the rights of the parties or (ii) to prevent irreparable damage. See MPEP §409.03(g). See 35 U.S.C. §118; 37 CFR 1.47; §§ 409.03 and 605 of the *Manual of Patent Examining Procedure*, Eighth Edition, Revision 2, (May 2004)(MPEP).

Petitioner submits statements of fact of Judy Lagero Vo and Brian R. Coleman to show the unavailability of inventor Baptiste to join in the application. The declaration filed November 22, 2004, has been reviewed and found in compliance with § 1.63. Moreover, the petition submitted includes the petition fee and the last known address of inventor Baptiste. Petitioner has submitted an employment agreement to show that inventor Baptiste agreed to assign with a declaration that the invention was made by inventor Baptiste while employed by the 37 CFR 1.47(b) applicant. Petitioner declares that acceptance of the declaration and according of a filing date is necessary to preserve the rights of, and to prevent irreparable damage to, the assignee/petitioner.

However, the statements of fact, and other evidence of record, are not sufficient to show refusal. See MPEP 409.03(d). The petition includes an account of inventor Baptiste making an oral refusal to join in the application. However, before a refusal can be alleged, rule 47 applicant must demonstrate that a *bona fide* attempt was made to present a copy of the application papers (specification, including claims, drawings, and oath or declaration) to the non-signing inventor. See MPEP 409.03(d). The declaration and supporting documentation only support a conclusion that the declaration and assignment were presented to inventor Baptiste. A refusal by an inventor to sign an oath or declaration when the inventor has not been presented with the application papers does not itself suggest that the inventor is refusing to join the application unless it is clear that the inventor understands exactly what he or she is being asked to sign and refuses to accept the application papers. It is reasonable to require that the inventor be presented with the application papers before a petition under 37 CFR 1.47 is granted since such a procedure ensures that the inventor is apprised of the application to which the oath or declaration is directed. *In re Gray*, 115 USPQ 80 (Comm'r Pat. 1956).

Thus, on renewed petition, rule 47(b) applicant must establish that the entire application package, including specification,

claims and drawings, was presented to non-signing inventor Martin and he subsequently refused to sign. If they have not already been sent, a copy of the application papers should be sent to the last known address of the non-signing inventor, or, if the inventor is represented by counsel, to the address of the non-signing inventor's attorney. Documentary evidence, including copies of the transmittal cover letters and return mail receipts, should be made part of the record.

Further correspondence with respect to this decision should be addressed as follows:

By mail:	Mail Stop Petition Commissioner for Patents P.O. Box 1450 Alexandria, VA 22313-1450
By fax:	(703) 872-9306 ATTN: Office of Petitions
By hand:	Customer Service Window Randolph Building 401 Dulany Street Alexandria, VA 22314

Telephone inquiries regarding this decision should be directed to the undersigned at (571) 272-3219.

Nancy Johnson
Senior Petitions Attorney
Office of Petitions

UNITED STATES PATENT AND TRADEMARK OFFICE

Commissioner for Patents
United States Patent and Trademark Office
P.O. Box 1450
Alexandria, VA 22313-1450
www.uspto.gov

Paper No.

PERKINS COIE LLP
P.O. BOX 2168
MENLO PARK, CA 94026

COPY MAILED

JUN 30 2005

OFFICE OF PETITIONS

In re Application of :
Alexandre Baptiste :
Application No. 10/789,451 : DECISION ACCORDING STATUS
Filed: February 26, 2004 : UNDER 37 C.F.R. § 1.47(b)
Attorney Docket No. 37469-8041.US01:
Title: VACUUM PACKAGING APPLIANCE :
WITH REMOVABLE TROUGH :
:

This is in response to the "Request for Reconsideration of Petition under 37 C.F.R. § 1.47(b)," filed May 12, 2005.

The petition is **GRANTED**.

The above-identified application was filed on February 26, 2004, naming Alexandre Baptiste as sole inventor. In response to the Notice to File Missing Parts of Application mailed May 19, 2004, rule 47(b) applicant filed the initial petition and paid the required filing fees and late surcharge. By decision mailed April 19, 2005, the petition filed November 22, 2004 was dismissed for failure to submit adequate proof of refusal of the non-signing inventor to join in the application.

On instant renewed petition, rule 47(b) applicant submitted a revised Statement of Facts by Judy Lagera Vo. This statement has been reviewed and found sufficient to show that non-signing inventor Baptiste has, by his conduct, refused to join in the application after having been presented with the application papers.

In view thereof, this application is hereby accorded Rule 1.47(b) status.

As provided in new Rule 1.47(c), this Office will forward notice of this application's filing to the non-signing inventor at the address given in the petition. Notice of the filing of this application will also be published in the Official Gazette.

Telephone inquiries regarding this decision should be directed to the undersigned at (571) 272-3219.

Nancy Johnson
Senior Petitions Attorney
Office of Petitions

UNITED STATES PATENT AND TRADEMARK OFFICE

Commissioner for Patents
United States Patent and Trademark Office
P.O. Box 1450
Alexandria, VA 22313-1450
www.uspto.gov

PERKINS COIE LLP
P.O. BOX 2168
MENLO PARK, CA 94026

COPY MAILED

JAN 26 2005

OFFICE OF PETITIONS

In re Application of :
Alexandre A. N. Baptista :
Application No. 10/789,456 : DECISION REFUSING STATUS
Filed: February 26, 2004 : UNDER 37 CFR 1.47(b)
Attorney Docket No. 37469-8013.US01 :

For: **VACUUM PACKAGING APPLIANCE WITH VACUUM SIDE CHANNEL LATCHES**

This is a decision on the petition under 37 CFR 1.47(b), filed November 22, 2004 (certificate of mailing dated November 19, 2004).

The petition under 37 CFR 1.47(b) is **dismissed.**

Any request for reconsideration under this decision must be submitted within TWO (2) MONTHS from the mail date of this decision. Extensions of time under 37 CFR 1.136(a) are permitted. Failure to respond will result in the abandonment of this application. Any response should be titled "Request for Reconsideration of Petition Under 37 CFR 1.47(b).

The above-identified application was filed on February 26, 2004, without an executed oath or declaration or filing fee. Accordingly, a "Notice to File Missing Parts Nonprovisional Application" (the "Notice") was mailed on May 19, 2004, requiring an executed oath or declaration and a surcharge for the late filing of the oath or declaration, payment of the filing and additional claim fees. The instant petition was filed on November 22, 2004, responsively, along with a request for an extension of time within the fourth month.

A grantable petition under 37 CFR 1.47(b) requires:

(1) proof that the non-signing inventor(s) cannot be reached or refuses to sign the oath or declaration after having been presented with the application papers (specification, claims, and drawings);

(2) an acceptable oath or declaration in compliance with 35 U.S.C. §§ 115 and 116;

(3) the petition fee,

(4) a statement of the last known address of the non-signing inventor,

(5) proof of proprietary interest, and

(6) a showing (statement) that such action is necessary to preserve the rights of the parties or to prevent irreparable damage.

The instant petition lacks items (1) as set forth above.

Section 409.03(d) of the *Manual of Patent Examining Procedure* provides, in pertinent part, that:

> [a] refusal by an inventor to sign an oath or declaration when the inventor has not been presented with the application papers does not, itself, suggest that the inventor is refusing to join the application unless it is clear that the inventor understands exactly what he or she is being asked to sign and refuses to accept the application papers. A copy of the application papers should be sent to the last known address of the nonsigning inventor . . .

The declaration offered by Judy Lagera Vo speaks to the circumstances of the refusal of the inventor to execute the declaration, but only indicates that the Inventor's Declaration and Assignment were sent to the inventor. There is not indication that a complete copy of the application papers (specification, claims, drawings, oath and declaration) was presented to the inventor. Petitioner must demonstrate that an effort was made to present a complete copy of the application papers to the inventor before the inventor can be said to have refused to join the prosecution of the application. Any renewed petition must, therefore, establish that an attempt was made to present a complete copy of the application papers to the non-signing inventor.

Further correspondence with respect to this matter should be addressed as follows:

By mail:
Mail Stop Petitions
Commissioner for Patents
P.O. Box 1450
Alexandria, VA 22313-1450

By FAX: (703) 872-9306
Attn: Office of Petitions

Telephone inquiries should be directed to the undersigned at (571) 272-3222.

Kenya A. McLaughlin
Petitions Attorney
Office of Petitions

UNITED STATES PATENT AND TRADEMARK OFFICE

Commissioner for Patents
United States Patent and Trademark Office
P.O. Box 1450
Alexandria, VA 22313-1450
www.uspto.gov

PERKINS COIE LLP
P.O. BOX 2168
MENLO PARK CA 94026

COPY MAILED

MAR 2 3 2005

OFFICE OF PETITIONS

In re Application of
Alexandre A. N. Baptista
Application No.: 10/789,456
Filed: February 26, 2004
Attorney Docket No: 37469-8013.US01
For: **VACUUM PACKAGING APPLIANCE WITH VACUUM SIDE CHANNEL LATCHES**

: DECISION ACCORDING
: RULE 47(a) STATUS

This is in response to the petition under 37 CFR 1.47(a), filed March 14, 2005.

The petition is **GRANTED**.

The above-identified application and papers have been reviewed and found in compliance with 37 CFR 1.47(a). This application is hereby accorded Rule 1.47(a) status.

The above-identified application was filed on February 26, 2004, without an executed oath or declaration or filing fee. Accordingly, a "Notice to File Missing Parts Nonprovisional Application" (the "Notice") was mailed on May 19, 2004, requiring an executed oath or declaration and a surcharge for the late filing of the oath or declaration, payment of the filing and additional claim fees. A petition under 37 CFR 1.47(b) was filed on November 22, 2004, responsively, along with a request for an extension of time within the fourth month. The petition was dismissed by a decision mailed January 26, 2005. The instant renewed petition was filed on March 14, 2005.

Petitioner has shown that inventor Baptista refuses to do so after having been presented with the application papers. The above-identified application and papers have been reviewed and found in compliance with 37 CFR 1.47(a). This application is hereby accorded Rule 1.47(a) status.

As provided in Rule 1.47(c), this Office will forward notice of this application's filing to the non-signing inventor at the addresses given in the petition. Notice of the filing of this application will also be published in the Official Gazette.

This application will be directed to the Office of Initial Patent Examination for further processing.

Telephone inquiries should be directed to the undersigned at (571) 272-3222.

Kenya A. McLaughlin
Petitions Attorney
Office of Petitions

UNITED STATES PATENT AND TRADEMARK OFFICE

Commissioner for Patents
United States Patent and Trademark Office
P.O. Box 1450
Alexandria, VA 22313-1450
www.uspto.gov

Alexandre A.N. Baptista
8078 Creekside Drive
Dublin, CA 94568

COPY MAILED

MAR 23 2005

OFFICE OF PETITIONS

In re Application of :
Alexandre A.N. Baptista :
Application No. 10/789,456 : LETTER
Filed: February 26, 2004 :
Attorney Docket No. 37469-8013.US01 :
For: VACUUM PACKAGING APPLIANCE WITH VACUUM SIDE CHANNEL LATCHES

Dear Mr. Baptista:

You are named as the sole inventor in the above-identified United States patent application filed under the provisions of 35 U.S.C. 116 (United States Code) and 37 CFR 1.47(b), Rules of Practice in Patent Cases. Should a patent be granted on the application you will be designated therein as the sole inventor.

As the sole inventor, you are entitled to inspect any paper in the file wrapper of the application, order copies of all or any part thereof (at a prepaid cost per 37 CFR 1.19) or make your position of record in the application. Alternatively, you may arrange to do any of the preceding through a registered patent attorney or agent presenting written authorization from you. If you care to join the application, counsel of record (see below) would presumably assist you. Joining in the application would entail the filing of an appropriate oath or declaration by you pursuant to 37 CFR 1.63.

Telephone inquiries regarding this communication should be directed to Petitions Attorney Kenya A. McLaughlin at (571) 272-3222. Requests for information regarding your application should be directed to the File Information Unit at (703) 308-2733. Information regarding how to pay for and order a copy of the application, or a specific paper in the application, should be directed to Certification Division at (703) 308-9726 or 1-800-972-6382 (outside the Washington D.C. area).

Kenya A. McLaughlin
Petitions Attorney
Office of Petitions

PERKINS COIE LLP
P.O. BOX 2168
MENLO PARK, CA 94026

UNITED STATES PATENT AND TRADEMARK OFFICE

COMMISSIONER FOR PATENTS
UNITED STATES PATENT AND TRADEMARK OFFICE
P.O. BOX 1450
ALEXANDRIA, VA 22313-1450
www.uspto.gov

George Yee
TOWNSEND and TOWNSEND and CREW LLP
Two Embarcadero Center, 8th Floor
San Francisco, California 94111-3834

MAIL

SEP 2 8 2005

DIRECTOR OFFICE
TECHNOLOGY CENTER 2100

In re Application of:
Hideo OHATA et al
Application No. 10/789,472
Filed: February 27, 2004
For: METHOD AND PROGRAM OF COLLECTING PERFORMANCE DATA FOR STORAGE NETWORK

DECISION ON PETITION TO MAKE SPECIAL

This is a decision on the petition, filed on September 15, 2005 under 37 C.F.R. §102(d) and M.P.E.P. § 708.02(VIII): Accelerated Examination, to make the above-identified application special.

The petition is **GRANTED**.

M.P.E.P. § 708.02, Section VIII which sets out the prerequisites for a grantable petition for Accelerated Examination under 37 C.F.R. § 102(d) states in relevant part:

> A new application (one which has not received any examination by the examiner) may be granted special status provided that applicant (and this term includes applicant's attorney or agent) complies with each of the following items:
>
> (A) Submits a petition to make special accompanied by the fee set forth in 37 CFR 1.17(h);
>
> (B) Presents all claims directed to a single invention, or if the Office determines that all the claims presented are not obviously directed to a single invention, will make an election without traverse as a prerequisite to the grant of special status;
>
> (C) Submits a statement(s) that a pre-examination search was made, listing the field of search by class and subclass, publication, Chemical Abstracts, foreign patents, etc. A search made by a foreign patent office satisfies this requirement;
>
> (D) Submits one copy each of the references deemed most closely related to the subject matter encompassed by the claims if said references are not already of record; and
>
> (E) Submits a detailed discussion of the references, which discussion points out, with the particularity required by 37 CFR 1.111 (b) and (c), how the claimed subject matter is patentable over the references.

Applicant's submission of September 15, 2005 meets all the criteria set out above. Accordingly, the petition is **GRANTED**. The application file is being forwarded to the Examiner for accelerated examination in accordance with M.P.E.P. § 708.02. If the application is subsequently allowed, it will be given priority for printing. See M.P.E.P. § 1309.

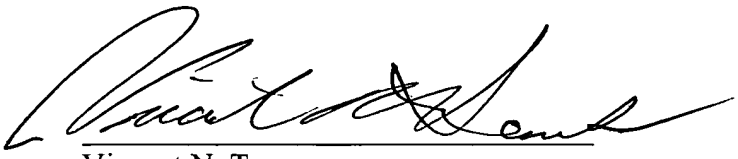

Vincent N. Trans
Special Program Examiner
Technology Center 2100
Computer Architecture, Software, and
Information Security
571-272-3613

UNITED STATES PATENT AND TRADEMARK OFFICE

Commissioner for Patents
United States Patent and Trademark Office
P.O. Box 1450
Alexandria, VA 22313-1450
www.uspto.gov
DIW Apr-07

BAKER BOTTS L.L.P.
PATENT DEPARTMENT
98 SAN JACINTO BLVD., SUITE 1500
AUSTIN TX 78701-4039

COPY MAILED

APR 13 2007

OFFICE OF PETITIONS

In re Application of :
Ma et al. :
Application No. 10/789,478 : DECISION ON PETITION
Filed: 27 February, 2004 :
Atty Docket No. 068736.0236 :
:

This is a decision on the petition filed on 23 January, 2007, under 37 CFR 1.137(b),[1] to revive the above-identified application.

The petition is **GRANTED**.

The application became abandoned on 4 November, 2006, for failure to timely file the issue and publication fees in response to the Notice of Allowance and Fee(s) Due mailed on 3 August, 2006, which set a three (3) month statutory period for reply. Notice of Abandonment was mailed on 1 December, 2006.

---

[1] Effective December 1, 1997, the provisions of 37 CFR 1.137(b) now provide that where the delay in reply was unintentional, a petition may be filed to revive an abandoned application or a lapsed patent pursuant to 37 CFR 1.137(b). A grantable petition filed under the provisions of 37 CFR 1.137(b) must be accompanied by:

(1) the required reply, unless previously filed. In a nonprovisional application abandoned for failure to prosecute, the required reply may be met by the filing of a continuing application. In a nonprovisional utility or plant application filed on or after June 8, 1995, and abandoned for failure to prosecute, the required reply may also be met by the filing of a request for continuing examination in compliance with § 1.114. In an application or patent, abandoned or lapsed for failure to pay the issue fee or any portion thereof, the required reply must be the payment of the issue fee or any outstanding balance thereof. In an application, abandoned for failure to pay the publication fee, the required reply must include payment of the publication fee.

(2) the petition fee as set forth in 37 CFR 1.17(m);

(3) a statement that the entire delay in filing the required reply from the due date for the reply until the filing of a grantable petition pursuant to 37 CFR 1.137(b) was unintentional. The Commissioner may required additional information where there is a question whether the delay was unintentional; and

(4) any terminal disclaimer (and fee as set forth in 37 CFR 1.20(d)) required pursuant to 37 CFR 1.137(c)).

The application is being referred to the Publishing Division for processing into a patent.

Telephone inquiries concerning this matter may be directed to the undersigned at (571)272-3231.

D Wood

Douglas I. Wood
Senior Petitions Attorney
Office of Petitions

UNITED STATES PATENT AND TRADEMARK OFFICE

UNITED STATES DEPARTMENT OF COMMERCE
United States Patent and Trademark Office
Address: COMMISSIONER FOR PATENTS
P.O. Box 1450
Alexandria, Virginia 22313-1450
www.uspto.gov

PEACOCK MYERS, P.C.
201 THIRD STREET, N.W.
SUITE 1340
ALBUQUERQUE, NM 87102

Mail Date: 04/21/2010

Applicant	: David C. Nemir	: DECISION ON REQUEST FOR
Patent Number	: 7635284	: RECALCULATION of PATENT
Issue Date	: 12/22/2009	: TERM ADJUSTMENT IN VIEW
Appliction No	: 10/789,496	: OF WYETH AND NOTICE OF INTENT TO
Filed	: 02/26/2004	: ISSUE CERTIFICATE OF CORRECTION
		:

The Request for Recalculation is **GRANTED** to the extent indicated.

The patent term adjustment has been determined to be **1006** days. The USPTO will *sua sponte* issue a certificate of correction reflecting the amount of PTA days determined by the recalculation.

Prior to the issuance of the certificate of correction, the USPTO will afford patentee an opportunity to be heard and request reconsideration. Accordingly, patentee has **one month or thirty (30) days**, whichever is longer, to file a request for reconsideration of this patent term adjustment calculation. See 35 U.S.C. 154(b)(3)(B)(ii) and 37 CFR 1.322(a)(4). No extensions of time will be granted under 37 CFR 1.136.

Patentee should use document code PET.OP if electronically filing a request for reconsideration of this patent term adjustment calculation. The patentee must also include the information required by 37 CFR 1.705(b)(2) and the fee required by 37 CFR 1.18(e). If patentee does not file a timely request for reconsideration of this patent term adjustment calculation including the information required by 37 CFR 1.705(b)(2) and the fee required by 37 CFR 1.18(e), the USPTO will issue a certificate of correction reflecting the PTA determination noted above.

Patentee should be aware that in order to preserve the right to review in the United States District Court for the District of Columbia of the USPTO patent term adjustment determination, patentee must ensure that he or she also take the steps required under 35 U.S.C. 154(b)(4)(A) in a timely manner. Nothing in the request for recalculation should be construed as providing an alternative time frame for commencing a civil action under 35 U.S.C. 154(b)(4)(A).

Any questions concerning this decision should be directed to the Office of Patent Legal Administration at 571-272-7702.

United States
Patent And
Trademark Office

P.O. Box 1450, Alexandria, Virginia 22313-1450 – www.uspto.gov

PETITION DECISION

05/11/04

Brooks Kushman P.C.
Marc F. Malooley
1000 Town Center, 22 Floor
Southfield, MI 48075-1238

Dear Applicant:

The Box PG Pub replacement drawings for application number 10/789511 received on 04/26/04 by the U. S. Patent and Trademark Office will be included for patent publication.

Telephone inquiries should be directed to Kaletus King, Office of Pre-Grant Publication 703 605-4283.

Kaletus King
Signature of Reviewer, Office of Pre-Grant Publication

UNITED STATES PATENT AND TRADEMARK OFFICE

Commissioner for Patents
United States Patent and Trademark Office
P.O. Box 1450
Alexandria, VA 22313-1450
www.uspto.gov

SUN MICROSYSTEMS, INC.
C/O DARBY & DARBY P.C.
P.O. BOX 770
CHURCH STREET STATION
NEW YORK, NY 10008-0770

COPY MAILED

NOV 10 2008

OFFICE OF PETITIONS

In re Application of :
Miguel Isenberg :
Application No. 10/789,523 : DECISION ON PETITION
Filed: February 26, 2004 : TO WITHDRAW
Attorney Docket No. 20910/0206101-US0 : FROM RECORD
:

This is a decision on the Request to Withdraw as attorney or agent of record under 37 C.F.R. § 1.36(b), filed April 21, 2008.

The request is **DISMISSED** as moot.

A review of the file record indicates that the power of attorney to Sun Microsystems, Inc., c/o Darby & Darby, PC has been revoked by the assignee of the patent application on July 21, 2008. Accordingly, the request to withdraw under 37 C.F.R. § 1.36(b) is moot.

All future communications from the Office will continue to be directed to the below-listed address until otherwise notified by applicant.

Telephone inquires concerning this decision should be directed to undersigned at 571-272-1642.

/AMW/
April M. Wise
Petitions Examiner
Office of Petitions

cc: OSHA LIANG LLP/SUN
TWO HOUSTON CENTER
909 FANIN
SUITE 3500
HOUSTON, TX 77010

UNITED STATES PATENT AND TRADEMARK OFFICE

UNITED STATES DEPARTMENT OF COMMERCE
United States Patent and Trademark Office
Address: COMMISSIONER FOR PATENTS
P.O. Box 1450
Alexandria, Virginia 22313-1450
www.uspto.gov

OSHA LIANG LLP/Oracle
TWO HOUSTON CENTER
909 FANNIN, SUITE 3500
HOUSTON, TX 77010

Mail Date: 04/20/2010

Applicant	: Miguel Isenberg	: DECISION ON REQUEST FOR
Patent Number	: 7624396	: RECALCULATION of PATENT
Issue Date	: 11/24/2009	: TERM ADJUSTMENT IN VIEW
Appliction No	: 10/789,523	: OF WYETH AND NOTICE OF INTENT TO
Filed	: 02/26/2004	: ISSUE CERTIFICATE OF CORRECTION
		:

The Request for Recalculation is **GRANTED** to the extent indicated.

The patent term adjustment has been determined to be **1200** days. The USPTO will *sua sponte* issue a certificate of correction reflecting the amount of PTA days determined by the recalculation.

Prior to the issuance of the certificate of correction, the USPTO will afford patentee an opportunity to be heard and request reconsideration. Accordingly, patentee has **one month or thirty (30) days**, whichever is longer, to file a request for reconsideration of this patent term adjustment calculation. See 35 U.S.C. 154(b)(3)(B)(ii) and 37 CFR 1.322(a)(4). No extensions of time will be granted under 37 CFR 1.136.

Patentee should use document code PET.OP if electronically filing a request for reconsideration of this patent term adjustment calculation. The patentee must also include the information required by 37 CFR 1.705(b)(2) and the fee required by 37 CFR 1.18(e). If patentee does not file a timely request for reconsideration of this patent term adjustment calculation including the information required by 37 CFR 1.705(b)(2) and the fee required by 37 CFR 1.18(e), the USPTO will issue a certificate of correction reflecting the PTA determination noted above.

Patentee should be aware that in order to preserve the right to review in the United States District Court for the District of Columbia of the USPTO patent term adjustment determination, patentee must ensure that he or she also take the steps required under 35 U.S.C. 154(b)(4)(A) in a timely manner. Nothing in the request for recalculation should be construed as providing an alternative time frame for commencing a civil action under 35 U.S.C. 154(b)(4)(A).

Any questions concerning this decision should be directed to the Office of Patent Legal Administration at 571-272-7702.

UNITED STATES PATENT AND TRADEMARK OFFICE

Commissioner for Patents
United States Patent and Trademark Office
P.O. Box 1450
Alexandria, VA 22313-1450
www.uspto.gov

QUALCOMM INCORPORATED
5775 MOREHOUSE DR.
SAN DIEGO CA 92121

COPY MAILED

OCT 28 2008

OFFICE OF PETITIONS

In re Application of :
Roland Reinhard Rick et al. :
Application No. 10/789,535 : DECISION ON PETITION
Filed: February 26, 2004 :
Attorney Docket No. 000259D1 :

This is a decision on the petition under the unintentional provisions of 37 CFR 1.137(b), filed August 19, 2008, to revive the above-identified application.

The petition is **GRANTED**.

The application became abandoned for failure to reply in a timely manner to the non-final Office action mailed, May 22, 2007, which set a shortened statutory period for reply of three (3) months. No extensions of time under the provisions of 37 CFR 1.136(a) were obtained. Accordingly, the application became abandoned on August 23, 2007.

The petition satisfies the requirements of 37 CFR 1.137(b) in that petitioner has supplied (1) the reply in the form of an amendment, (2) the petition fee of $1540, and (3) a proper statement of unintentional delay.

It is not apparent whether the statement of unintentional delay was signed by a person who would have been in a position of knowing that the entire delay in filing the required reply from the due date for the reply until the filing of a grantable petition pursuant to 37 CFR 1.137(b) was unintentional. Nevertheless, in accordance with 37 CFR 10.18, the statement is accepted as constituting a certification of unintentional delay. However, in the event that petitioner has no knowledge that the delay was unintentional, petitioner must make such an inquiry to ascertain that, in fact, the delay was unintentional. If petitioner discovers that the delay was intentional, petitioner must so notify the Office.

An extension of time under 37 CFR 1.136 must be filed prior to the expiration of the maximum extendable period for reply. *See* In re Application of S., 8 USPQ2d 1630, 1631 (Comm'r Pats. 1988). Since the $1050 extension of time fee submitted with the petition on August 19, 2008, was subsequent to the maximum extendable period for reply. Also the terminal disclaimer filed with this petition is not required since the application is a utility application filed after June 8, 1995. Therefore these fees are unnecessary and will be credited to petitioner's deposit account.

Telephone inquiries concerning this decision should be directed to JoAnne Burke at (571) 272-4584.

This application is being referred to Technology Center AU 2611 for appropriate action by the Examiner in the normal course of business on the reply received.

Ramesh Krishnamurthy
Petitions Examiner
Office of Petitions

UNITED STATES PATENT AND TRADEMARK OFFICE

UNITED STATES DEPARTMENT OF COMMERCE
United States Patent and Trademark Office
Address: COMMISSIONER FOR PATENTS
P.O. Box 1450
Alexandria, Virginia 22313-1450
www.uspto.gov

Townsend and Townsend and Crew LLP
Two Embarcadero Center
Eighth Floor
San Francisco, CA 94111-3834

Mail Date: 04/21/2010

Applicant	: Artur Mitterer	: DECISION ON REQUEST FOR
Patent Number	: 7648958	: RECALCULATION of PATENT
Issue Date	: 01/19/2010	: TERM ADJUSTMENT IN VIEW
Appliction No	: 10/789,562	: OF WYETH AND NOTICE OF INTENT TO
Filed	: 02/27/2004	: ISSUE CERTIFICATE OF CORRECTION
		:

The Request for Recalculation is **GRANTED** to the extent indicated.

The patent term adjustment has been determined to be **127** days. The USPTO will *sua sponte* issue a certificate of correction reflecting the amount of PTA days determined by the recalculation.

Prior to the issuance of the certificate of correction, the USPTO will afford patentee an opportunity to be heard and request reconsideration. Accordingly, patentee has **one month or thirty (30) days**, whichever is longer, to file a request for reconsideration of this patent term adjustment calculation. See 35 U.S.C. 154(b)(3)(B)(ii) and 37 CFR 1.322(a)(4). No extensions of time will be granted under 37 CFR 1.136.

Patentee should use document code PET.OP if electronically filing a request for reconsideration of this patent term adjustment calculation. The patentee must also include the information required by 37 CFR 1.705(b)(2) and the fee required by 37 CFR 1.18(e). If patentee does not file a timely request for reconsideration of this patent term adjustment calculation including the information required by 37 CFR 1.705(b)(2) and the fee required by 37 CFR 1.18(e), the USPTO will issue a certificate of correction reflecting the PTA determination noted above.

Patentee should be aware that in order to preserve the right to review in the United States District Court for the District of Columbia of the USPTO patent term adjustment determination, patentee must ensure that he or she also take the steps required under 35 U.S.C. 154(b)(4)(A) in a timely manner. Nothing in the request for recalculation should be construed as providing an alternative time frame for commencing a civil action under 35 U.S.C. 154(b)(4)(A).

Any questions concerning this decision should be directed to the Office of Patent Legal Administration at 571-272-7702.

UNITED STATES PATENT AND TRADEMARK OFFICE

UNITED STATES DEPARTMENT OF COMMERCE
United States Patent and Trademark Office
Address: COMMISSIONER FOR PATENTS
P.O. Box 1450
Alexandria, Virginia 22313-1450
www.uspto.gov

WALL & TONG, LLP/
ALCATEL-LUCENT USA INC.
595 SHREWSBURY AVENUE
SHREWSBURY, NJ 07702

Mail Date: 04/21/2010

Applicant	: Katherine H. Guo	: DECISION ON REQUEST FOR
Patent Number	: 7584248	: RECALCULATION of PATENT
Issue Date	: 09/01/2009	: TERM ADJUSTMENT IN VIEW
Appliction No	: 10/789,585	: OF WYETH AND NOTICE OF INTENT TO
Filed	: 02/27/2004	: ISSUE CERTIFICATE OF CORRECTION
		:

The Request for Recalculation is **GRANTED** to the extent indicated.

The patent term adjustment has been determined to be **980** days. The USPTO will *sua sponte* issue a certificate of correction reflecting the amount of PTA days determined by the recalculation.

Prior to the issuance of the certificate of correction, the USPTO will afford patentee an opportunity to be heard and request reconsideration. Accordingly, patentee has **one month or thirty (30) days**, whichever is longer, to file a request for reconsideration of this patent term adjustment calculation. See 35 U.S.C. 154(b)(3)(B)(ii) and 37 CFR 1.322(a)(4). No extensions of time will be granted under 37 CFR 1.136.

Patentee should use document code PET.OP if electronically filing a request for reconsideration of this patent term adjustment calculation. The patentee must also include the information required by 37 CFR 1.705(b)(2) and the fee required by 37 CFR 1.18(e). If patentee does not file a timely request for reconsideration of this patent term adjustment calculation including the information required by 37 CFR 1.705(b)(2) and the fee required by 37 CFR 1.18(e), the USPTO will issue a certificate of correction reflecting the PTA determination noted above.

Patentee should be aware that in order to preserve the right to review in the United States District Court for the District of Columbia of the USPTO patent term adjustment determination, patentee must ensure that he or she also take the steps required under 35 U.S.C. 154(b)(4)(A) in a timely manner. Nothing in the request for recalculation should be construed as providing an alternative time frame for commencing a civil action under 35 U.S.C. 154(b)(4)(A).

Any questions concerning this decision should be directed to the Office of Patent Legal Administration at 571-272-7702.

UNITED STATES DEPARTMENT OF COMMERCE
Patent and Trademark Office
ASSISTANT SECRETARY OF COMMERCE AND
COMMISSIONER OF PATENTS AND TRADEMARKS
Washington, D.C. 20231

Patent No. : 7,373,123
Inventor(s) : Mark Spellman
Issued : May 13, 2008
For: MULTIPLE TUNERS IN A SINGLE RADIO RECEIVER

Request for Certificate of Correction

Consideration has been given your request for the issuance of a certificate of correction under Rule 1.323and 1.322.

The alleged error in col. 6, line 65 is printed in accordance with the record

In view of the foregoing, your request in this matter is hereby denied.

A certificate of correction will issue to correct the remaining errors noted in your request.

Eva James
For Mary Diggs
Decisions & Certificate
of Correction Branch
(703) 308-9390ext. 124 or 125

Sanders N. Hillis
Brinks Hofer Gilson & Lione
One Indiana Square, Suite 1600
Indianapolis, IN 46204

ej

UNITED STATES PATENT AND TRADEMARK OFFICE

Commissioner for Patents
United States Patent and Trademark Office
P.O. Box 1450
Alexandria, VA 22313-1450
www.uspto.gov

QUALCOMM INCORPORATED
5775 MOREHOUSE DR.
SAN DIEGO CA 92121

COPY MAILED

SEP 18 2007

OFFICE OF PETITIONS

In re Application of :
PAN et al. :
Application No. 10/789,605 : ON PETITION
Filed: 02/27/2004 :
Attorney Docket No. 030475 :

This is a decision on the petition under the unintentional provisions of 37 CFR 1.137(b), filed August 22, 2006, to revive the above-identified application.

The petition is **GRANTED**.

The application became abandoned for failure to timely file a reply within the meaning of 37 CFR 1.113 to the final Office action of August 22, 2006. The proposed reply required for consideration of a petition to revive must be a Notice of Appeal (and appeal fee required by 37 CFR 41.20(b)(2), an amendment that *prima facie* places the application in condition for allowance, a Request for Continued Examination and submission (37 CFR 1.114), or the filing of a continuing application under 37 CFR 1.53(b). See MPEP 711.03(c)(III)(A)(2). No extensions of time pursuant to the provisions of 37 CFR 1.136(a) were obtained. Accordingly, the application became abandoned on November 23, 2006.

The petition satisfies the requirements of 37 CFR 1.137(b) in that petitioner has supplied (1) the reply in the form of a Request for Continued Examination (RCE), the RCE fee and the submission required by 37 CFR 1.114; (2) the petition fee; and (3) a proper statement of unintentional delay.

Telephone inquiries concerning this decision should be directed to the undersigned at (571) 272-3211.

This application is being referred to Technology Center AU 2112 for processing of the RCE and for appropriate action by the Examiner in the normal course of business on the amendment submitted in accordance with 37 CFR 1.114.

Christina T. Donnell

Christina Tartera Donnell
Senior Petitions Attorney
Office of Petitions

UNITED STATES PATENT AND TRADEMARK OFFICE

UNITED STATES DEPARTMENT OF COMMERCE
United States Patent and Trademark Office
Address: COMMISSIONER FOR PATENTS
P.O. Box 1450
Alexandria, Virginia 22313-1450
www.uspto.gov

MEDTRONIC
Attn: Noreen Johnson - IP Legal Department
2600 Sofamor Danek Drive
MEMPHIS, TN 38132

Mail Date: 04/21/2010

Applicant	: Roy K. Lim	: DECISION ON REQUEST FOR
Patent Number	: 7611517	: RECALCULATION of PATENT
Issue Date	: 11/03/2009	: TERM ADJUSTMENT IN VIEW
Appliction No	: 10/789,610	: OF WYETH AND NOTICE OF INTENT TO
Filed	: 02/27/2004	: ISSUE CERTIFICATE OF CORRECTION
		:

The Request for Recalculation is **GRANTED** to the extent indicated.

The patent term adjustment has been determined to be **1176** days. The USPTO will *sua sponte* issue a certificate of correction reflecting the amount of PTA days determined by the recalculation.

Prior to the issuance of the certificate of correction, the USPTO will afford patentee an opportunity to be heard and request reconsideration. Accordingly, patentee has **one month or thirty (30) days**, whichever is longer, to file a request for reconsideration of this patent term adjustment calculation. See 35 U.S.C. 154(b)(3)(B)(ii) and 37 CFR 1.322(a)(4). No extensions of time will be granted under 37 CFR 1.136.

Patentee should use document code PET.OP if electronically filing a request for reconsideration of this patent term adjustment calculation. The patentee must also include the information required by 37 CFR 1.705(b)(2) and the fee required by 37 CFR 1.18(e). If patentee does not file a timely request for reconsideration of this patent term adjustment calculation including the information required by 37 CFR 1.705(b)(2) and the fee required by 37 CFR 1.18(e), the USPTO will issue a certificate of correction reflecting the PTA determination noted above.

Patentee should be aware that in order to preserve the right to review in the United States District Court for the District of Columbia of the USPTO patent term adjustment determination, patentee must ensure that he or she also take the steps required under 35 U.S.C. 154(b)(4)(A) in a timely manner. Nothing in the request for recalculation should be construed as providing an alternative time frame for commencing a civil action under 35 U.S.C. 154(b)(4)(A).

Any questions concerning this decision should be directed to the Office of Patent Legal Administration at 571-272-7702.

UNITED STATES PATENT AND TRADEMARK OFFICE

Commissioner for Patents
United States Patent and Trademark Office
P.O. Box 1450
Alexandria, VA 22313-1450
www.uspto.gov

TEXAS INSTRUMENTS INCORPORATED
P O BOX 655474, M/S 3999
DALLAS TX 75265

COPY MAILED
SEP 22 2006
OFFICE OF PETITIONS

In re Application of :
Muthia Venkateswaran :
Application No. 10/789,646 : DECISION ON PETITION
Filed: March 1, 2004 : UNDER 37 CFR 1.78(a)(3)
Attorney Docket No. TI-34105.1 :

This is a decision on the petition filed April 4, 2006, under 37 CFR 1.78(a)(3) to accept an unintentionally delayed claim under 35 U.S.C. § 120 for the benefit of a prior-filed non-provisional application.

The petition is **DISMISSED AS MOOT**.

A petition for acceptance of a claim for late priority under 37 CFR 1.78(a)(3) is only applicable to those applications filed on or after November 29, 2000.

Along with the instant petition under 37 CFR §§ 1.78(a)(3), petitioner has submitted an amendment to the first sentence of the specification following the title to include a reference to the prior-filed nonprovisional application.

The instant pending nonprovisional application was filed on March 1, 2004, and was pending at the time of the filing of the instant petition. While a reference to the prior-filed nonprovisional application was not included in an ADS or in the first sentence of the specification following the title, reference nevertheless was made in the transmittal letter and the declaration filed with the above identified application.

The current procedure where a claim for priority under 37 CFR §§ 1.78(a)(3) is not included in the first sentence of the specification or in an ADS but does appear either in the oath or declaration or a transmittal letter filed with the application and the Office notes the claim for priority, no petition will be required to accept a late claim for priority. This is because the application would have been scheduled for publication on the basis of the information concerning the claim submitted elsewhere in the application with the time period set forth in 37 CFR §§ 1.78(a)(2)(ii). However, on the other hand, if the USPTO does not note the claim for priority to the prior-filed application(s) set forth in the oath or declaration or transmittal letter submitted with the application, a petition will

be required to accept a late claim for priority under 37 CFR §§ 1.78(a)(3).[1] In the instant case, the Office noted the claim for priority of the prior-filed nonprovisional application in the transmittal letter filed with the application, as shown by its inclusion on the filing receipt.

It should be noted also that if the claim for priority had not been noted by the Office and a petition had been required, it would have been dismissed as the amendment filed failed to state the relationship of the continuing application to the instant application. 37 CFR 1.78(a)(2)(i) requires that any nonprovisional application claiming the benefit of one or more prior-filed copending nonprovisional applications must contain or be amended to contain a reference to each such prior-filed application, identifying it by application number (consisting of the series code and serial number) and indicating the relationship of the applications. The relationship between the applications is whether the subject application is a continuation, divisional, or continuation-in-part of a prior-filed nonprovisional application. An example of a proper benefit claim is: "This application is a continuation of Application No. 10/---, filed---." A benefit claim that merely states: "This application claims the benefit of Application No. 10/---, filed---," does not comply with 37 CFR 1.78(a)(2)(i) since the proper relationship, which includes the type of continuing application, is not stated. Also, the status of each nonprovisional parent application (if it is patented or abandoned) should also be indicated, following the filing date of the parent nonprovisional application. *See* MPEP Section 201.11, Reference to Prior Nonprovisional Applications.

In vew of the above, the $1370.00 petition fee submitted is unnecessary and will be refunded to petitioner's deposit account in due course.

Any questions concerning this decision on petition may be directed to Senior Petitions Attorney Patricia Faison-Ball at (571) 272-3212. All other inquiries concerning either the examination procedures or status of the application should be directed the Technology Center.

This matter is being referred to Technology Center Art Unit 2813 for appropriate processing of the amendment filed April 4, 2006.

Frances Hicks
Petitions Examiner
Office of Petitions

---

[1] *Note* MPEP 201.11 (V), page 200-75 (Rev. 1. Feb. 2004 and 66 Federal Register 67087 at 67089 (Dec. 28, 2001), effective December 28, 2001.

UNITED STATES PATENT AND TRADEMARK OFFICE

Commissioner for Patents
United States Patent and Trademark Office
P.O. Box 1450
Alexandria, VA 22313-1450
www.uspto.gov

Thomas M. Freiburger
P.O. Box 1026
Tiburon, CA 94920

COPY MAILED
APR 25 2006
OFFICE OF PETITIONS

In re Application of :
Lovoi et al. :
Application No. 10/789,653 : Decision on Petition
Filed: February 28, 2004 :
Attorney Docket No. 687P :

This is a decision on the petition, filed November 21, 2005, which is being treated as a petition under 37 CFR 1.137(b) to revive the instant non-provisional application for failure to timely notify the U.S. Patent and Trademark (USPTO) of the filing of an application in a foreign country, or under a multinational treaty that requires publication of applications eighteen months after filing. *See* 37 CFR 1.137(f).

The petition is **GRANTED**.

A petition to revive an application abandoned pursuant to 35 U.S.C. 122(b)(2)(B)(iii) for failure to notify the USPTO of a foreign filing must be accompanied by:

(1) the required reply which is met by the notification of such filing in a foreign country or under a multinational treaty;
(2) the petition fee as set forth in 37 CFR 1.17(m); and
(3) a statement that the entire delay in filing the required reply from the due date of the reply until the filing of a grantable petition was unintentional.

The instant petition has been found to be in compliance with the above statute and 37 CFR 1.137(b). Accordingly, the failure to timely notify the USPTO of a foreign or international filing within 45 days after the date of filing of such foreign or international application as provided by 35 U.S.C. § 122(b)(2)(B)(iii) and 37 CFR 1.213(c) is accepted as having been unintentionally delayed.

The previous Request and Certification under 35 U.S.C. § 122(b)(2)(B)(i) has been rescinded. A Notice Regarding Rescission of Nonpublication Request which sets forth the projected publication date of August 3, 2006, accompanies this decision on petition.

Technology Center Art Unit 2882 will be informed of the instant decision and the application will be further examined in due course.

Telephone inquiries concerning this decision should be directed to the undersigned at (571) 272-3203.

Charles Steven Brantley
Senior Petitions Attorney
Office of Petitions

ATTACHMENT: Notice Regarding Rescission of Nonpublication Request

UNITED STATES PATENT AND TRADEMARK OFFICE

Commissioner for Patents
United States Patent and Trademark Office
P.O. Box 1450
Alexandria, VA 22313-1450
www.uspto.gov

COPY MAILED

APR 26 2006

OFFICE OF PETITIONS

Thomas M. Freiburger
P.O. Box 1026
Tiburon, CA 94920

COPY MAILED
APR 26 2006
OFFICE OF PETITIONS

In re Application of
Lovoi et al.
Application No. 10/789,653
Filed: February 28, 2004
Attorney Docket No. 687P

Decision on Petition

This is a decision on the petition, filed November 21, 2005, which is being treated as a petition under 37 CFR 1.137(b) to revive the instant non-provisional application for failure to timely notify the U.S. Patent and Trademark (USPTO) of the filing of an application in a foreign country, or under a multinational treaty that requires publication of applications eighteen months after filing. *See* 37 CFR 1.137(f).

The petition is **GRANTED**.

A petition to revive an application abandoned pursuant to 35 U.S.C. 122(b)(2)(B)(iii) for failure to notify the USPTO of a foreign filing must be accompanied by:

(1) the required reply which is met by the notification of such filing in a foreign country or under a multinational treaty;
(2) the petition fee as set forth in 37 CFR 1.17(m); and
(3) a statement that the entire delay in filing the required reply from the due date of the reply until the filing of a grantable petition was unintentional.

The instant petition has been found to be in compliance with the above statute and 37 CFR 1.137(b). Accordingly, the failure to timely notify the USPTO of a foreign or international filing within 45 days after the date of filing of such foreign or international application as provided by 35 U.S.C. § 122(b)(2)(B)(iii) and 37 CFR 1.213(c) is accepted as having been unintentionally delayed.

The previous Request and Certification under 35 U.S.C. § 122(b)(2)(B)(i) has been rescinded. A Notice Regarding Rescission of Nonpublication Request which sets forth the projected publication date of August 3, 2006, accompanies this decision on petition.

Technology Center Art Unit 2882 will be informed of the instant decision and the application will be further examined in due course.

Telephone inquiries concerning this decision should be directed to the undersigned at (571) 272-3203.

Charles Steven Brantley
Senior Petitions Attorney
Office of Petitions

ATTACHMENT: Notice Regarding Rescission of Nonpublication Request

UNITED STATES PATENT AND TRADEMARK OFFICE

Commissioner for Patents
United States Patent and Trademark Office
P.O. Box 1450
Alexandria, VA 22313-1450
www.uspto.gov

POWELL GOLDSTEIN LLP
ONE ATLANTIC CENTER, 14TH FLOOR
1201 WEST PEACHTREE STREET NW
ATLANTA, GA 30309-3488

COPY MAILED

FEB 19 2008

OFFICE OF PETITIONS

In re Application of :
William Harrison Allen :
Application No. 10/789,654 : ON PETITION
Filed: February 27, 2004 :
Attorney Docket No. 141647.00001 :

This is a decision on the petition filed, October 17, 2007 under 37 CFR 1.137(b), to revive the above-identified application.

The petition is **GRANTED.**

The above-identified application is being revived solely for purposes of continuity with a Request For Continued Examination (RCE) filed on October 17, 2007.

Telephone inquiries concerning this decision should be directed to Irvin Dingle at (571) 272-3210.

This matters is being referred to Technology Center AU 3714 for further processing.

Irvin Dingle
Petitions Examiner
Office of Petitions

UNITED STATES PATENT AND TRADEMARK OFFICE

Commissioner for Patents
United States Patent and Trademark Office
P.O. Box 1450
Alexandria, VA 22313-1450
www.uspto.gov

POWELL GOLDSTEIN LLP
ONE ATLANTIC CENTER FOURTEENTH FLOOR
1201 WEST PEACHTREE STREET NW
ATLANTA, GA 30309-3488

COPY MAILED

OCT 21 2008

OFFICE OF PETITIONS

In re Application of	:	
William Harrison Allen	:	
Application No. 10/789,654	:	DECISION ON PETITION
Filed: February 27, 2004	:	
Attorney Docket No. 141647.00001	:	

This is a decision on the petition under the unintentional provisions of 37 CFR 1.137(b), filed September 18, 2008, to revive the above-identified application.

The petition is **GRANTED**.

The application became abandoned for failure to reply in a timely manner to the Non-Final Rejection mailed, March 17, 2008, which set a shortened statutory period for reply of three (3) months. No extensions of time under the provisions of 37 CFR 1.136 (a) were obtained. Accordingly, the application became abandoned on June 18, 2008.

The petition satisfies the requirements of 37 CFR 1.137(b) in that petitioner has supplied (1) the reply in the form of an Amendment After Non-Final Rejection, (2) the petition fee of $770, and (3) a proper statement of unintentional delay.

Telephone inquiries concerning this decision should be directed to Denise Williams at (571) 272-8930.

This application is being referred to Technology Center AU 3715 for appropriate action by the Examiner in the normal course of business on the reply received.

Brian Brown
Petitions Examiner
Office of Petitions

UNITED STATES PATENT AND TRADEMARK OFFICE

Commissioner for Patents
United States Patent and Trademark Office
P.O. Box 1450
Alexandria, VA 22313-1450
www.uspto.gov

SCHNECK & SCHNECK
P.O. BOX 2-E
SAN JOSE, CA 95109-0005

COPY MAILED

FEB 23 2006

OFFICE OF PETITIONS

In re Application of :
Xiaohua Huang :
Application No. 10/789,661 :
Filed: February 27, 2004 :
Attorney Docket No. HUA-001 :

DECISION ON PETITION
TO WITHDRAW
FROM RECORD

This is a decision on the Request to Withdraw as attorney or agent of record under 37 C.F.R. § 1.36(b), filed January 11, 2005.

The request is **APPROVED**.

A grantable request to withdraw as attorney/agent of record must be signed by every attorney/agent seeking to withdraw or contain a clear indication that one attorney is signing on behalf of another/others. A request to withdraw will not be approved unless at least 30 (thirty) days would remain between the date of approval and the later of the expiration date of a time to file a response or the expiration date of the maximum time period which can be extended under 37 C.F.R. § 1.136(a).

The request was signed by Thomas Schneck on behalf of all attorneys of record who are associated with customer No. 003897.

All attorneys/agents associated with the Customer Number 003897 have been withdrawn.

Applicant is reminded that there is no attorney of record at this time.

The correspondence address of record has been changed and the new correspondence address is the address indicated below.

Telephone inquires concerning this decision should be directed to Wan Laymon at 571-272-3220.

This matter is being referred to Files Repository.

Denise Pothier
Petitions Examiner
Office of Petitions

cc: XIAOHUA HUANG
PO BOX 9980
SAN JOSE, CA 95157

UNITED STATES PATENT AND TRADEMARK OFFICE

Commissioner for Patents
United States Patent and Trademark Office
P.O. Box 1450
Alexandria, VA 22313-1450
www.uspto.gov

IPSG, P.C.
P.O. BOX 700640
SAN JOSE CA 95170-0640

COPY MAILED

NOV 0 1 2006

OFFICE OF PETITIONS

In re Application of :
KAO, et al. :
Application No. 10/789,667 : DECISION ON PETITION
Filed: February 27, 2004 : TO WITHDRAW
Attorney Docket No. RZMI-P320 : FROM RECORD
:

This is a decision on the Request to Withdraw as attorney or agent of record under 37 C.F.R. § 1.36(b), filed August 01, 2006.

The request is **NOT APPROVED**.

A grantable request to withdraw as attorney/agent of record must be signed by every attorney/agent seeking to withdraw or contain a clear indication that one attorney is signing on behalf of another/others. A request to withdraw will not be approved unless at least 30 (thirty) days would remain between the date of approval and the later of the expiration date of a time to file a response or the expiration date of the maximum time period which can be extended under 37 C.F.R. § 1.136(a).

In order to request or take action in a patent matter, the assignee must establish its ownership of the patent to the satisfaction of the Director. In this regard, a Statement under 37 CFR 3.73(b) must have either: (i) documentary evidence of a chain of title from the original owner to the assignee (*e.g.*, copy of an executed assignment), and a statement affirming that the documentary evidence of the chain of title from the original owner to the assignee was or concurrently is being submitted for recordation pursuant to § 3.11; or (ii) a statement specifying where documentary evidence of a chain of title from the original owner to the assignee is recorded in the assignment records of the Office (*e.g.*, reel and frame number). The power of attorney filed on February 27, 2004 does not include one of the above two options.

All future communications from the Office will continue to be directed to the above-listed address until otherwise notified by applicant.

Telephone inquiries concerning this decision should be directed to Patricia Volpe at 571-272-6825.

PVolpe for

David Bucci
Petitions Examiner
Office of Petitions

cc: Raza Microelectronics, Inc.
Legal Department
18920 Forge Drive
Cupertino, CA 95014-0701

UNITED STATES PATENT AND TRADEMARK OFFICE

Commissioner for Patents
United States Patent and Trademark Office
P.O. Box 1450
Alexandria, VA 22313-1450
www.uspto.gov

COPY MAILED

FEB 2 2 2007

OFFICE OF PETITIONS

IPSG, P.C.
P.O. BOX 700640
SAN JOSE CA 95170-0640

In re Application of :
Sophia W. **KAO** :
Application No. 10/789,668 : DECISION ON PETITION
Filed: February 27, 2004 : TO WITHDRAW
Attorney Docket No. RZMI-P319 : FROM RECORD
:

This is a decision on the Request to Withdraw as attorney or agent of record under 37 C.F.R. § 1.36(b), filed August 1, 2006.

The request is **NOT APPROVED**.

A grantable request to withdraw as attorney/agent of record must be signed by every attorney/agent seeking to withdraw or contain a clear indication that one attorney is signing on behalf of another/others. A request to withdraw will not be approved unless at least 30 (thirty) days would remain between the date of approval and the later of the expiration date of a time to file a response or the expiration date of the maximum time period which can be extended under 37 C.F.R. § 1.136(a).

The Office cannot approve the request at this time since the reasons provided do not meet any of the conditions under the mandatory or permissive categories enumerated in 37 CFR 10.40. Section 10.40 of Title 37 of the Code of Federal Regulation states, "[a] practitioner shall not withdraw from employment in a proceeding before the Office without permission from the Office[.]" More specifically, 37 CFR 10.40 states, "[i]f paragraph (b) of this section is not applicable, a practitioner may not request permission to withdraw in matter pending before the Office unless such request or such withdrawal is" for one the permissive reasons listed in 37 CFR 10.40(c). The reasons set forth in the request, "at the request of Raza Microelectronics. Inc." does not meet any of the conditions set forth in 37 CFR 10.40.

In order to request or take action in a patent matter, the assignee must establish its ownership of the patent to the satisfaction of the Director. In this regard, a Statement under 37 CFR 3.73(b) must have either: (i) documentary evidence of a chain of title from the original owner to the assignee (*e.g.*, copy of an executed assignment), and a statement affirming that the documentary evidence of the chain of title from the original owner to the assignee was or concurrently is being

submitted for recordation pursuant to § 3.11; or (ii) a statement specifying where documentary evidence of a chain of title from the original owner to the assignee is recorded in the assignment records of the Office (*e.g.*, reel and frame number).

All future communications from the Office will continue to be directed to the above-listed address until otherwise notified by applicant.

Telephone inquiries concerning this decision should be directed to the undersigned at 571-272-7253.

Monica A. Graves
Petitions Examiner
Office of Petitions

cc: **RAZA MICROELECTRONICS, INC.**
LEGAL DEPARTMENT
18920 FORGE DRVIE
CUPERTINO, CA 95014-0701

UNITED STATES PATENT AND TRADEMARK OFFICE

Commissioner for Patents
United States Patent and Trademark Office
P.O. Box 1450
Alexandria, VA 22313-1450
www.uspto.gov
DBW Dec-07

STEVENS LAW GROUP
P.O.BOX 1667
SAN JOSE CA 95109

COPY MAILED

DEC 18 2007

OFFICE OF PETITIONS

In re Application of :
Sophia W. Kao :
Application Number: 10/789668 : DECISION ON PETITION
Filing Date: 02/27/2004 :
Attorney Docket Number: RAZA-03500 :

This is a decision on the petition filed on October 1, 2007, under 37 CFR 1.137(b),[1] to revive the above-identified application.

The petition is **GRANTED**.

The application became abandoned on June 24, 2007, for failure to timely respond to the non-final Office action mailed on March 23, 2007, which set a three (3)-month shortened statutory period for reply. No extensions of the time for reply were obtained in accordance with 37 CFR 1.136(a). The filing of the present petition precedes the mailing of Notice of Abandonment.

Receipt of the amendment filed on October 1, 2007, is acknowledged.

---

[1] Effective December 1, 1997, the provisions of 37 CFR 1.137(b) now provide that where the delay in reply was unintentional, a petition may be filed to revive an abandoned application or a lapsed patent pursuant to 37 CFR 1.137(b). A grantable petition filed under the provisions of 37 CFR 1.137(b) must be accompanied by:

(1) the required reply, unless previously filed. In a nonprovisional application abandoned for failure to prosecute, the required reply may be met by the filing of a continuing application. In a nonprovisional utility or plant application filed on or after June 8, 1995, and abandoned for failure to prosecute, the required reply may also be met by the filing of a request for continuing examination in compliance with § 1.114. In an application or patent, abandoned or lapsed for failure to pay the issue fee or any portion thereof, the required reply must be the payment of the issue fee or any outstanding balance thereof. In an application, abandoned for failure to pay the publication fee, the required reply must include payment of the publication fee.

(2) the petition fee as set forth in 37 CFR 1.17(m);

(3) a statement that the entire delay in filing the required reply from the due date for the reply until the filing of a grantable petition pursuant to 37 CFR 1.137(b) was unintentional. The Commissioner may required additional information where there is a question whether the delay was unintentional; and

(4) any terminal disclaimer (and fee as set forth in 37 CFR 1.20(d)) required pursuant to 37 CFR 1.137(c)).

This application is being referred to Technology Center Art Unit 2189 for further processing.

Telephone inquiries concerning this matter may be directed to the undersigned at (571) 272-3231.

Douglas I. Wood
Senior Petitions Attorney
Office of Petitions

UNITED STATES PATENT AND TRADEMARK OFFICE

Commissioner for Patents
United States Patent and Trademark Office
P.O. Box 1450
Alexandria, VA 22313-1450
www.uspto.gov

LEE & HAYES
421 W RIVERSIDE AVENUE
SUITE 500
SPOKANE WA 99201

COPY MAILED

DEC 30 2005

OFFICE OF PETITIONS

In re Application of :
Jered Donald Aasheim et al :
Application No. 10/789,685 :
Filed: February 27, 2004 :
Attorney Docket No. MS1-1067USC1 :

ON PETITION

This is a decision on the petition, filed December 20, 2005, under 37 CFR 1.313(c)(2) to withdraw the above-identified application from issue after payment of the issue fee.[1]

The petition is **GRANTED**.

The above-identified application is withdrawn from issue for consideration of a submission under 37 CFR 1.114 (request for continued examination). See 37 CFR 1.313(c)(2).

Petitioner is advised that the issue fee paid on October 6, 2005 in the above-identified application cannot be refunded. If, however, the above-identified application is again allowed, petitioner may request that it be applied towards the issue fee required by the new Notice of Allowance.[2]

Telephone inquiries should be directed to the undersigned at (571) 272-3208.

The examiner of Technology Center AU 2189 will consider the request for continued examination under 37 CFR 1.114.

Karen Creasy
Petitions Examiner
Office of Petitions

---

[1]It is noted that the petition reference Application No. 10/184,819 rather than 10/789,685.

[2] The request to apply the issue fee to the new Notice may be satisfied by completing and returning the new Issue Fee Transmittal Form PTOL-85(b), which includes the following language thereon: "Commissioner for Patents is requested to apply the Issue Fee and Publication Fee (if any) or re-apply any previously paid issue fee to the application identified above." Petitioner is advised that, whether a fee is indicated as being due or not, the Issue Fee Transmittal Form **must** be completed and timely submitted to avoid abandonment. Note the language in bold text on the first page of the Notice of Allowance and Fee(s) Due (PTOL-85).

UNITED STATES PATENT AND TRADEMARK OFFICE

Commissioner for Patents
United States Patent and Trademark Office
P.O. Box 1450
Alexandria, VA 22313-1450
www.uspto.gov

CRAIG W. RODDY
HALLIBURTON ENERGY SERVICES
P.O. BOX 1431
DUNCAN, OK 73536-0440

COPY MAILED
APR 0 4 2006
OFFICE OF PETITIONS

In re Application of :
Reddy, et al. :
Application No. 10/789,712 : ON PETITION
Filed: February 27, 2004 :
Attorney Docket No. HES 2001-IP-003428U1C1 :

This is a decision on the petition under 37 CFR 1.137(b), filed March 13, 2006, to revive the above-identified application.

The petition is **GRANTED**.

This application became abandoned for failure to timely file a proper reply to the non-final Office action mailed September 7, 2005. Accordingly, this application became abandoned on December 8, 2005.

The file is being forwarded to Technology Center 3600 for review of the "RESPONSE TO NONFINAL OFFICE ACTION," filed March 13, 2006.

Telephone inquiries concerning this matter may be directed to the undersigned at (571) 272-3228.

Edward J. Tannouse
Petitions Attorney
Office of Petitions/Patent
Office of the Deputy Commissioner
for Patent Examination Policy

UNITED STATES PATENT AND TRADEMARK OFFICE

Commissioner for Patents
United States Patent and Trademark Office
P.O. Box 1450
Alexandria, VA 22313-1450
www.uspto.gov

HEWLETT PACKARD COMPANY
P O BOX 272400, 3404 E. HARMONY ROAD
INTELLECTUAL PROPERTY ADMINISTRATION
FORT COLLINS, CO 80527-2400

COPY MAILED

NOV 0 4 2008

OFFICE OF PETITIONS

In re Application of
John W. Curry
Application No. 10/789,733
Filed: February 27, 2004
Attorney Docket No. 200314830-1

ON PETITION

This is a decision in response to the petition, filed July 28, 2008, to revive the above-identified application under the provisions of 37 CFR 1.137(b).

The petition is **GRANTED**.

The application became abandoned for a failure to reply in a timely manner to a non-final Office action mailed May 3, 2007, which set a shortened statutory period for reply of three (3) months. No extension of time under the provisions of 37 CFR 1.136(a) was obtained. Accordingly, the application became abandoned on August 4, 2007. A Notice of Abandonment was mailed on December 28, 2007. On July 28, 2008, the present petition was filed.

There is no indication that the person signing the instant petition was ever given a power of attorney or authorization of agent to prosecute the above-identified application. However, in accordance with 37 CFR 1.34(a), the signature of John P. Wagner, Jr. appearing on the petition shall constitute a representation to the United States Patent and Trademark Office that he is authorized to represent the particular party on whose behalf he acts.

The petition satisfies the requirements of 37 CFR 1.137(b) in that petitioner has supplied (1) the reply in the form of amendment; (2) the petition fee of $1,540; and (3) an adequate statement of unintentional delay[1].

The application is being referred to Technology Center AU 2113 for appropriate action by the Examiner in the normal course of business on the reply received July 28, 2008.

[1] 37 CFR 1.137(b)(3) requires a statement that the entire delay in filing the required reply from the due date for the reply until the filing of a grantable petition pursuant to 37 CFR 1.137(b) was unintentional. While the statement is not made by an attorney of record, such statement is being treated as having been made as the result of a reasonable inquiry into the facts and circumstances of such delay. See 37 CFR 10.18(b) and Changes to Patent Practice and Procedure; Final Rule Notice, 62 Fed. Reg. 53131, 53178 (October 10, 1997), 1203 Off. Gaz. Pat. Office 63, 103 (October 21, 1997). In the event that such an inquiry has not been made, petitioner must make such an inquiry. If such inquiry results in the discovery that it is not correct that the entire delay in filing the required reply from the due date for the reply until the filing of a grantable petition pursuant to 37 CFR 1.137(b) was unintentional, petitioner must notify the Office.

Telephone inquiries concerning this decision should be directed to the undersigned at (571) 272-3204. Inquiries relating to further prosecution should be directed to the Technology Center.

Sherry D. Brinkley
Petitions Examiner
Office of Petitions

UNITED STATES PATENT AND TRADEMARK OFFICE

UNITED STATES DEPARTMENT OF COMMERCE
United States Patent and Trademark Office
Address: COMMISSIONER FOR PATENTS
P.O. Box 1450
Alexandria, Virginia 22313-1450
www.uspto.gov

APPL NO.	FILING OR 371 (c) DATE	ART UNIT	FIL FEE REC'D	ATTY.DOCKET NO	DRAWINGS	TOT CLMS	IND CLMS
10/789,734	02/27/2004	1753	421	B0020/7000	9	24	2

CONFIRMATION NO. 8424

022832
KIRKPATRICK & LOCKHART LLP
75 STATE STREET
BOSTON, MA 02109-1808

CORRECTED FILING RECEIPT

OC000000014931518

Date Mailed: 01/11/2005

Receipt is acknowledged of this regular Patent Application. It will be considered in its order and you will be notified as to the results of the examination. Be sure to provide the U.S. APPLICATION NUMBER, FILING DATE, NAME OF APPLICANT, and TITLE OF INVENTION when inquiring about this application. Fees transmitted by check or draft are subject to collection. Please verify the accuracy of the data presented on this receipt. **If an error is noted on this Filing Receipt, please write to the Office of Initial Patent Examination's Filing Receipt Corrections, facsimile number 703-746-9195. Please provide a copy of this Filing Receipt with the changes noted thereon. If you received a "Notice to File Missing Parts" for this application, please submit any corrections to this Filing Receipt with your reply to the Notice. When the USPTO processes the reply to the Notice, the USPTO will generate another Filing Receipt incorporating the requested corrections (if appropriate).**

Applicant(s)

Yoichi Sano, Zushi, JAPAN;

Power of Attorney: The patent practitioners associated with Customer Number **022832**.

Domestic Priority data as claimed by applicant

Foreign Applications

If Required, Foreign Filing License Granted: 05/24/2004

The country code and number of your priority application, to be used for filing abroad under the Paris Convention, is US10/789,734

Projected Publication Date: 09/01/2005

Non-Publication Request: No

Early Publication Request: No

**** SMALL ENTITY ****

Title

Production of electrolytic water

Preliminary Class

205

LICENSE FOR FOREIGN FILING UNDER
Title 35, United States Code, Section 184
Title 37, Code of Federal Regulations, 5.11 & 5.15

GRANTED

The applicant has been granted a license under 35 U.S.C. 184, if the phrase "IF REQUIRED, FOREIGN FILING LICENSE GRANTED" followed by a date appears on this form. Such licenses are issued in all applications where the conditions for issuance of a license have been met, regardless of whether or not a license may be required as set forth in 37 CFR 5.15. The scope and limitations of this license are set forth in 37 CFR 5.15(a) unless an earlier license has been issued under 37 CFR 5.15(b). The license is subject to revocation upon written notification. The date indicated is the effective date of the license, unless an earlier license of similar scope has been granted under 37 CFR 5.13 or 5.14.

This license is to be retained by the licensee and may be used at any time on or after the effective date thereof unless it is revoked. This license is automatically transferred to any related applications(s) filed under 37 CFR 1.53(d). This license is not retroactive.

The grant of a license does not in any way lessen the responsibility of a licensee for the security of the subject matter as imposed by any Government contract or the provisions of existing laws relating to espionage and the national security or the export of technical data. Licensees should apprise themselves of current regulations especially with respect to certain countries, of other agencies, particularly the Office of Defense Trade Controls, Department of State (with respect to Arms, Munitions and Implements of War (22 CFR 121-128)); the Office of Export Administration, Department of Commerce (15 CFR 370.10 (j)); the Office of Foreign Assets Control, Department of Treasury (31 CFR Parts 500+) and the Department of Energy.

NOT GRANTED

No license under 35 U.S.C. 184 has been granted at this time, if the phrase "IF REQUIRED, FOREIGN FILING LICENSE GRANTED" DOES NOT appear on this form. Applicant may still petition for a license under 37 CFR 5.12, if a license is desired before the expiration of 6 months from the filing date of the application. If 6 months has lapsed from the filing date of this application and the licensee has not received any indication of a secrecy order under 35 U.S.C. 181, the licensee may foreign file the application pursuant to 37 CFR 5.15(b).

UNITED STATES PATENT AND TRADEMARK OFFICE

Commissioner for Patents
United States Patent and Trademark Office
P.O. Box 1450
Alexandria, VA 22313-1450
www.uspto.gov

MAILED

JUL 20 2004

Director's Office
Group 3700

Morton A. Polster
56 Windsor Street
Rochester, New York 14605

In re application of
Vernon E. Gleasman

Serial Number: 10/789739
Filed: February 27, 2004

DECISION ON PETITION TO MAKE SPECIAL UNDER 37 CFR. 1.102(c)

For: **LONG-PISTON HYDRAULIC MACHINES**

This is a decision on the petition filed on February 27, 2004, under 37 CFR. 1.102(c) to make special the above identified application because of the age/health of the applicant. Since the requirements of the M.P.E.P Section 708.02 IV have been met, the petition will be GRANTED.

The examiner is directed (1) to make an interference search for possible interfering applications, (2) to promptly examine this application out of turn, and (3) if any interfering application is discovered, to examine such application simultaneously and state in the first official letter of such application that it is being taken out of turn because of a possible interference.

Petitioner is advised that this application will continue to be special, throughout its entire prosecution and pendency, including interference or appeal, if any, only is Petitioner makes a prompt bona-fide effort, in response to each Office action, to place the application in condition for allowance, even if it is necessary to conduct an interview with the Examiner to accomplish this purpose.

Summary: Decision on Petition **GRANTED**.

Richard A. Bertsch
Director
Technology Center 3700
(703) 308-0975

rt: 7/19/04

UNITED STATES PATENT AND TRADEMARK OFFICE

Commissioner for Patents
United States Patent and Trademark Office
P.O. Box 1450
Alexandria, VA 22313-1450
www.uspto.gov

Jack Schwartz & Associates
1350 Broadway, Suite 1510
New York, New York 10018 - 7702

COPY MAILED
APR 2 8 2006
OFFICE OF PETITIONS

In re Application of :
Paul BOISVERT :
Application No. 10/789,741 : DECISION ON PETITION
Filed: February 27, 2004 : TO WITHDRAW
Attorney Docket No. 1091-2 : FROM RECORD
:

This is a decision on the Request to Withdraw as attorney or agent of record under 37 C.F.R. § 1.36(b), filed January 11, 2006, and supplemented on March 27, 2006.

The request is **APPROVED**.

A grantable request to withdraw as attorney/agent of record must be signed by every attorney/agent seeking to withdraw or contain a clear indication that one attorney is signing on behalf of another/others. A request to withdraw will not be approved unless at least 30 (thirty) days would remain between the date of approval and the later of the expiration date of a time to file a response or the expiration date of the maximum time period which can be extended under 37 C.F.R. § 1.136(a).

The request was signed by Jack Schwartz on behalf of himself and all other attorneys of record. Applicant is reminded that there is no attorney of record at this time.

The correspondence address of record has been changed to that of Stephen Tabah and the new correspondence address is the address indicated below.

The instant application became abandoned by operation of law for failure to timely file an appropriate reply to the restriction requirement, mailed August 15, 2005.

Telephone inquiries concerning this decision should be directed to BethAnne Dayoan at 571-272-3209.

BethAnne Dayoan
Petitions Examiner
Office of Petitions

cc: Stephen Tabah
6301 Northcrest Place, #5M
Outrement, Quebec Canada H3S 2W4

UNITED STATES PATENT AND TRADEMARK OFFICE
UNDER SECRETARY OF COMMERCE FOR INTELLECTUAL PROPERTY AND
DIRECTOR OF THE UNITED STATES PATENT AND TRADEMARK OFFICE
WASHINGTON, DC 20231
www.uspto.gov

BAKER BOTTS L.L.P.
PATENT DEPARTMENT
98 SAN JACINTO BLVD., SUITE 1500
AUSTIN TX 78701-

MAILED
FROM DIRECTORS OFFICE
JAN 13 2006
TECHNOLOGY CENTER 3600

In re Application of :
Jennifer L. Alvarez et al. : DECISION ON PETITION
Application No. 10/789,757 : TO WITHDRAW THE
Filed: February 27, 2004 : HOLDING OF ABANDONMENT
For: METHOD FOR DELIVERING SECONDARY (NON-LOCATION) DATA TO A GPS RECEIVER

This is in reply to the petition filed in the United States Patent and Trademark Office (USPTO) on June 01, 2005. This petition is being treated as a petition to withdraw the holding of abandonment. There is no fee for this petition.

The petition is **DISMISSED**.

A review of the file record indicates that the application was held abandoned for failure to timely respond to the Office action mailed September 10, 2004, which set a three-month extendable period for response. A Notice of Abandonment was mailed on April 26, 2005 stating that no reply had been received.

Petitioner contends that a response to the September 10, 2004 Office action was timely filed on December 09, 2004. The petition provides both a stamped post card receipt and an Express Mail label as evidence of the December 09, 2004 response.

The post card receipt is illegible and thus fails to accord the December 09, 2004 date to the copy of the response submitted with this petition.

The requirements for filing a grantable petition in the case of a correspondence mailed using "Express Mail" and never received by the Office are outlined in 37 CFR 1.10(e) and include the following:

(A) Be filed promptly after the person becomes aware that the Office has no evidence of receipt of the correspondence;

(B) Include a showing that the "Express Mail" mailing label was placed on each piece of correspondence prior to original mailing;

(C) Include a true copy of the originally deposited correspondence showing the number of the "Express Mail" mailing label thereon, a copy of any returned post card receipt, a copy of the "Express Mail" mailing label showing the "date-in" or other official notation entered by the USPS; and

(D) Include a statement, signed by the person who deposited the documents as "Express Mail" with the USPS, setting forth the date and time of deposit, and declaring that the copies of the correspondence, "Express Mail" mailing label, and returned postcard receipt accompanying the petition are true copies of the correspondence, mailing label and returned postcard receipt originally mailed or received.

In this case, applicant's petition lacks item (D) above. A statement signed by the person who signed the Express Mail receipt, in this case Amanda Guido, attesting on a personal knowledge basis to the timely transmission of the response on the date indicated on the Express Mail receipt is required.

Any request for reconsideration of this decision must be submitted within TWO (2) MONTHS from the mail date of this decision. Extensions of time under 37 CFR 1.136(b) are permitted. The reconsideration request should include a cover letter entitled "Renewed Petition to Withdraw the Holding of Abandonment Under 37 CFR 1.181."

for

Randolph A. Reese
Special Programs Examiner
Patent Technology Center 3600
(571) 272-6619

RAR/rjc 08/31/05

UNITED STATES PATENT AND TRADEMARK OFFICE

Commissioner for Patents
United States Patent and Trademark Office
P.O. Box 1450
Alexandria, VA 22313-1450
www.uspto.gov

BAKER BOTTS L.L.P.
PATENT DEPARTMENT
98 SAN JACINTO BLVD., SUITE 1500
AUSTIN, TX 78701-4039

COPY MAILED

JUN 09 2006

OFFICE OF PETITIONS

In re Application of

Alvarez, et al.

Application No. 10/789,757

Filed: February 27, 2004

Attorney Docket No. 090936.0517

DECISION ON PETITION

This is a decision on the petition under 37 CFR 1.181(a) to withdraw the holding of abandonment, filed March 10, 2006. The petition will also be treated as a petition under 37 CFR 1.10.

The petition under 37 CFR 1.10 is **granted.**

The petition under 37 CFR 1.181(a) to withdraw the holding of abandonment is also **granted**.

This application was held abandoned on December 11, 2004, after it was believed that no response was received to the non-final Office action September 10, 2004, which set a shortened statutory period for reply of three (3) months from its mailing date. Extensions of the time set for reply were available pursuant to 37 CFR 1.136(a). A Notice of Abandonment was mailed on April 26, 2005, indicating that a reply was not received.

TREATMENT UNDER 37 CFR 1.10

Section 711.03(c) of the *Manual of Patent Examining Procedure* provides, in pertinent part, that:

> 37 CFR 1.10(c) through 1.10(e) >and 1.10(g)< set forth procedures for petitioning the Director of the USPTO to accord a filing date to correspondence as of the date of deposit of the correspondence as "Express Mail." A petition to withdraw the holding of abandonment relying upon a timely reply placed in "Express Mail" must include an appropriate petition under 37 CFR 1.10(c), (d), * (e)>, or (g)< (see MPEP § 513). When a paper is shown to have been mailed to the Office using the "Express Mail" procedures, the paper must be entered in PALM with the "Express Mail" date.

The instant petition is being treated under 37 CFR 1.10 accordingly. Petitioner maintains that a response to the September 10, 2004, non-final Office action was mailed via the United States

Postal Service, Express Mail Service on December 9, 2004. A review of the reply that was allegedly mailed on December 9, 2004, reveals that Express Mail tracking number EV351291447US was cited thereon. A copy of the Express Mail tracking receipt for this package was previously provided noting a date-in of December 9, 2004. The evidence is convincing that a response to the non-final Office action was deposited the Express Mail Service on December 9, 2004. The petition under 37 CFR 1.10 is granted.

TREATMENT UNDER 37 CFR 1.181

The amendment filed responsively to the non-final Office action is noted as having been received December 9, 2004, as per the decision on the petition under 37 CFR 1.10. As a response to the non-final Office action was timely received, the holding of abandonment was improper and is withdrawn, accordingly.

Further inquires regarding this decision may be directed to the undersigned at (571) 272-3222.

The application file is being forwarded Technology Center 3600, GAU 3662, for further processing.

Kenya A. McLaughlin
Petitions Attorney
Office of Petitions

PTO/SB/66 (03-09)
Approved for use through 03/31/2012. OMB 0651-0016
U.S. Patent and Trademark Office: U.S. DEPARTMENT OF COMMERCE
Under the Paperwork Reduction Act of 1995, no persons are required to respond to a collection of information unless it displays valid OMB control number.

PETITION TO ACCEPT UNINTENTIONALLY DELAYED PAYMENT OF MAINTENANCE FEE IN AN EXPIRED PATENT (37 CFR 1.378(c))

Patent Number	Issue Date (YYYY-MM-DD)	Application Number	Filing Date (YYYY-MM-DD)	Docket Number (if applicable)
6837291	2005-01-04	10789760	2004-02-27	36/1268

CAUTION: Maintenance fee (and surcharge, if any) payment must correctly identify: (1) the patent number and (2) the application number of the actual U.S. application leading to issuance of that patent to ensure the fee(s) is/are associated with the correct patent. 37 CFR 1.366(c) and (d).

SMALL ENTITY

☐ Patentee claims, or has previously claimed, small entity status. See 37 CFR 1.27.

LOSS OF ENTITLEMENT TO SMALL ENTITY STATUS

☐ Patentee is no longer entitled to small entity status. See 37 CFR 1.27(g)

NOT Small Entity

	Fee	Code
◉	3 ½ year	(1551)
○	7 ½ year	(1552)
○	11 ½ year	(1553)

Small Entity

	Fee	Code
○	3 ½ year	(2551)
○	7 ½ year	(2552)
○	11 ½ year	(2553)

SURCHARGE

The surcharge required by 37 CFR 1.20(i)(2) (Fee Code 1558) must be paid as a condition of accepting unintentionally delayed payment of the maintenance fee.

MAINTENANCE FEE (37 CFR 1.20(e)-(g))

The appropriate maintenance fee must be submitted with this petition.

STATEMENT

THE UNDERSIGNED CERTIFIES THAT THE DELAY IN PAYMENT OF THE MAINTENANCE FEE TO THIS PATENT WAS UNINTENTIONAL

PETITIONER(S) REQUEST THAT THE DELAYED PAYMENT OF THE MAINTENANCE FEE BE ACCEPTED AND THE PATENT REINSTATED

THIS PORTION MUST BE COMPLETED BY THE SIGNATORY OR SIGNATORIES

37 CFR 1.378(d) states: "Any petition under this section must be signed by an attorney or agent registered to practice before the Patent and Trademark Office, or by the patentee, the assignee, or other party in interest."

I certify, in accordance with 37 CFR 1.4(d)(4) that I am

○ An attorney or agent registered to practice before the Patent and Trademark Office

◉ A sole patentee

○ A joint patentee; I certify that I am authorized to sign this submission on behalf of all the other patentees.

○ A joint patentee; all of whom are signing this e-petition

○ The assignee of record of the entire interest

Sole Patentee			
A signature of the applicant or representative is required in accordance with 37 CFR 1.33 and 10.18. Please see 37 CFR 1.4(d) for the form of the signature.			
Signature	/Steven L. Carson/	Date (YYYY-MM-DD)	2009-06-26
Name	Steven L. Carson		

This collection of information is required by 37 CFR 1.378(c). The information is required to obtain or retain a benefit by the public which is to file (and by the USPTO to process) an application. Confidentiality is governed by 35 U.S.C. 122 and 37 CFR 1.11 and 1.14. This collection is estimated to take 1 hour to complete, including gathering, preparing, and submitting the completed application form to the USPTO. Time will vary depending upon the individual case. Any comments on the amount of time you require to complete this form and/ or suggestions for reducing this burden, should be sent to the Chief Information Officer, U.S. Patent and Trademark Office, U.S. Department of Commerce, P.O. Box 1450, Alexandria, VA 22313-1450. DO NOT SEND FEES OR COMPLETED FORMS TO THIS ADDRESS. **This form can only be used when in conjunction with EFS-Web. If this form is mailed to the USPTO, it may cause delays in reinstating the patent.**

Privacy Act Statement

The Privacy Act of 1974 (P.L. 93-579) requires that you be given certain information in connection with your submission of the attached form related to a patent application or patent. Accordingly, pursuant to the requirements of the Act, please be advised that: (1) the general authority for the collection of this information is 35 U.S.C. 2(b)(2); (2) furnishing of the information solicited is voluntary; and (3) the principal purpose for which the information is used by the U.S. Patent and Trademark Office is to process and/or examine your submission related to a patent application or patent. If you do not furnish the requested information, the U.S. Patent and Trademark Office may not be able to process and/or examine your submission, which may result in termination of proceedings or abandonment of the application or expiration of the patent.

The information provided by you in this form will be subject to the following routine uses:

1. The information on this form will be treated confidentially to the extent allowed under the Freedom of Information Act (5 U.S.C. 552) and the Privacy Act (5 U.S.C. 552a). Records from this system of records may be disclosed to the Department of Justice to determine whether the Freedom of Information Act requires disclosure of these records.

2. A record from this system of records may be disclosed, as a routine use, in the course of presenting evidence to a court, magistrate, or administrative tribunal, including disclosures to opposing counsel in the course of settlement negotiations.

3. A record in this system of records may be disclosed, as a routine use, to a Member of Congress submitting a request involving an individual, to whom the record pertains, when the individual has requested assistance from the Member with respect to the subject matter of the record.

4. A record in this system of records may be disclosed, as a routine use, to a contractor of the Agency having need for the information in order to perform a contract. Recipients of information shall be required to comply with the requirements of the Privacy Act of 1974, as amended, pursuant to 5 U.S.C. 552a(m).

5. A record related to an International Application filed under the Patent Cooperation Treaty in this system of records may be disclosed, as a routine use, to the International Bureau of the World Intellectual Property Organization, pursuant to the Patent Cooperation Treaty.

6. A record in this system of records may be disclosed, as a routine use, to another federal agency for purposes of National Security review (35 U.S.C. 181) and for review pursuant to the Atomic Energy Act (42 U.S.C. 218(c)).

7. A record from this system of records may be disclosed, as a routine use, to the Administrator, General Services, or his/her designee, during an inspection of records conducted by GSA as part of that agency's responsibility to recommend improvements in records management practices and programs, under authority of 44 U.S.C. 2904 and 2906. Such disclosure shall be made in accordance with the GSA regulations governing inspection of records for this purpose, and any other relevant (i.e., GSA or Commerce) directive. Such disclosure shall not be used to make determinations about individuals.

8. A record from this system of records may be disclosed, as a routine use, to the public after either publication of the application pursuant to 35 U.S.C. 122(b) or issuance of a patent pursuant to 35 U.S.C. 151. Further, a record may be disclosed, subject to the limitations of 37 CFR 1.14, as a routine use, to the public if the record was filed in an application which became abandoned or in which the proceedings were terminated and which application is referenced by either a published application, an application open to public inspections or an issued patent.

9. A record from this system of records may be disclosed, as a routine use, to a Federal, State, or local law enforcement agency, if the USPTO becomes aware of a violation or potential violation of law or regulation.

UNITED STATES PATENT AND TRADEMARK OFFICE

Commissioner for Patents
United States Patent and Trademark Office
P.O. Box 1450
Alexandria, VA 22313-1450
www.uspto.gov

In re Patent No. 6837291
Issue Date: January 4,2005
Application No. 10789760
Filed: February 27,2004
Attorney Docket No. 36/1268

:
:DECISION GRANTING PETITION
:UNDER 37 CFR 1.378(c)
:

This is a decision on the electronic petition, filed June 26,2009 ,under 37 CFR 1.378(c) to accept the unintentionally delayed payment of the 3.5 year maintenance fee for the above-identified patent.

The petition is **GRANTED**.

The maintenance fee is accepted, and the above-identified patent reinstated as of June 26,2009 . This decision also constitutes notice that the fee has been accepted. An electronic copy of the petition and this decision has been created as an entry in the Image File Wrapper. Nevertheless, petitioner should print and retain an independent copy.

Telephone inquiries related to this electronic decision should be directed to the Electronic Business Center at 1-866-217-9197.

UNITED STATES PATENT AND TRADEMARK OFFICE

Commissioner for Patents
United States Patent and Trademark Office
P.O. Box 1450
Alexandria, VA 22313-1450
www.uspto.gov

MAILED

MAY 12 2005

Technology Center 2100

TOWNSEND AND TOWNSEND AND CREW, LLP
TWO EMBARCADERO CENTER
EIGHTH FLOOR
SAN FRANCISCO, CA 94111-3834

In re Application of: IKEGAYA, et al.
Application No. 10/789,771
Filed: February 27, 2004
For: SUPPORT SYSTEM FOR DATA MIGRATION

DECISION ON PETITION
TO MAKE SPECIAL
(ACCELERATED
EXAMINATION)
UNDER M.P.E.P. §708.02 (VIII)

This is a response to the petition filed February 14, 2005, under 37 C.F.R. §1.102(d) and M.P.E.P. §708.02 (VIII): Accelerated Examination, to make the above-identified application special.

The Petition is **DISMISSED**.

M.P.E.P. §708.02, Section VIII, which sets out the prerequisites for a grantable petition for Accelerated Examination under 37 C.F.R. §1.102(d) states in relevant part:

A new application (one which has not received any examination by the examiner) may be granted special status provided that applicant (and this term includes applicant's attorney or agent) complies with each of the following items:

(a) Submits a petition to make special accompanied by the fee set forth in **37 CFR 1.17(h)**;

(b) Presents all claims directed to a single invention, or if the Office determines that all the claims presented are not obviously directed to a single invention, will make an election without traverse as a prerequisite to the grant of special status;

(c) Submits a statement(s) that a pre-examination search was made, listing the field of search by class and subclass, publication, Chemical Abstracts, foreign patents, etc. The pre-examination search must be directed to the invention as claimed in the application for which special status is requested. A search made by a foreign patent office satisfies this requirement;

(d) Submits one copy each of the references deemed most closely related to the subject matter encompassed by the claims if said references are not already of record; and

(e) Submits a detailed discussion of the references, which discussion points out, with the particularity required by 37 CFR 1.111 (b) and (c), how the claimed subject matter is patentable over the references.

The petition filed February 14, 2005 fails to adequately meet requirement (e) of the criteria set forth above.

With respect to requirement (e), a complete detailed discussion of the (aforementioned most closely related) references has not been provided with the necessary specificity required under 37 CFR 1.111 (b) and (c). Specifically, Petitioner should ensure that the above discussion is directed to how the language of **each of the independent claims** are specifically distinguishable and patentable from the references provided in requirement (d) above. It is noted that the independent claims 14, 17 and 20 differ in scope from the discussion presented in the petition with respect to independent claims 1, 9 and 12, specifically regarding the recited, or similarly recited, step of determining for a file that is not one of the unnecessary files, whether the file is to be migrated to another storage device.

Petition to Make Special **DISMISSED**.

Petitioner is given one opportunity to perfect the petition. Any request for reconsideration must be filed within TWO MONTHS of the mail date of this decision. Extensions of time under 37 CFR 1.136(a) are permitted by a declaration or statement providing the information as outlined above.

Until the renewed petition is submitted, the application will be returned to the examiner's docket to await treatment on the merits in the normal order of examination.

Brian L. Johnson
Special Program Examiner 4/29/05
Technology Center 2100
Computer Architecture, Software and Information Security
571-272-3595

SDL: 04/22/05

UNITED STATES PATENT AND TRADEMARK OFFICE

COMMISSIONER FOR PATENTS
UNITED STATES PATENT AND TRADEMARK OFFICE
P.O. BOX 1450
ALEXANDRIA, VA 22313-1450
www.uspto.gov

MAIL

SEP 2 8 2005

DIRECTOR OFFICE
TECHNOLOGY CENTER 2100

Chun-Pok Leung
TOWNSEND and TOWNSEND and CREW LLP
Two Embarcadero Center, 8th Floor
San Francisco, California 94111-3834

In re Application of:
Naoko IKEGAYA et al
Application No. 10/789,771
Filed: February 27, 2004
For: SUPPORT SYSTEM FOR DATA MIGRATION

DECISION ON PETITION TO MAKE SPECIAL

This is a decision on the renewed petition, filed on July 13, 2005 under 37 C.F.R. §102(d) and M.P.E.P. § 708.02(VIII): Accelerated Examination, to make the above-identified application special.

The petition is **GRANTED**.

M.P.E.P. § 708.02, Section VIII which sets out the prerequisites for a grantable petition for Accelerated Examination under 37 C.F.R. § 102(d) states in relevant part:

> A new application (one which has not received any examination by the examiner) may be granted special status provided that applicant (and this term includes applicant's attorney or agent) complies with each of the following items:
>
> (A) Submits a petition to make special accompanied by the fee set forth in 37 CFR 1.17(h);
>
> (B) Presents all claims directed to a single invention, or if the Office determines that all the claims presented are not obviously directed to a single invention, will make an election without traverse as a prerequisite to the grant of special status;
>
> (C) Submits a statement(s) that a pre-examination search was made, listing the field of search by class and subclass, publication, Chemical Abstracts, foreign patents, etc. A search made by a foreign patent office satisfies this requirement;
>
> (D) Submits one copy each of the references deemed most closely related to the subject matter encompassed by the claims if said references are not already of record; and
>
> (E) Submits a detailed discussion of the references, which discussion points out, with the particularity required by 37 CFR 1.111 (b) and (c), how the claimed subject matter is patentable over the references.
>
> In those instances where the request for this special status does not meet all the prerequisites set forth above, applicant will be notified and the defects in the request will be stated. The application will remain in the status of a new application awaiting action in its regular turn. In

those instances where a request is defective in one or more respects, applicant will be given one opportunity to perfect the request in a renewed petition to make special. If perfected, the request will then be granted. If not perfected in the first renewed petition, any additional renewed petitions to make special may or may not be considered at the discretion of the Group Special Program Examiner.

Applicant's submissions of July 13, 2005 and February 14, 2005 meet all the criteria set out above. Accordingly, the petition is **GRANTED**. The application file is being forwarded to the Examiner for accelerated examination in accordance with M.P.E.P. § 708.02. If the application is subsequently allowed, it will be given priority for printing. See M.P.E.P. § 1309.

Vincent N. Trans
Special Program Examiner
Technology Center 2100
Computer Architecture, Software, and
Information Security
571-272-3613

UNITED STATES PATENT AND TRADEMARK OFFICE

COMMISSIONER FOR PATENTS
UNITED STATES PATENT AND TRADEMARK OFFICE
P.O. BOX 1450
ALEXANDRIA, VA 22313-1450
www.uspto.gov

Robert W. Bergstrom
OLYMPIC PATENT WORKS PLLC
P.O. Box 4277
Seattle, WA 98194-0277

MAILED

JAN 04 2007

Technology Center 2100

In re Application of: William S. Worley, Jr.
Application No. 10/789,783
Filed: February 27, 2004
For: OPERATING SYSTEM CAPABLE OF SUPPORTING A CUSTOMIZED EXECUTION ENVIRONMENT

DECISION ON PETITION TO MAKE SPECIAL UNDER M.P.E.P.§708.02(IV): APPLICANT'S AGE

This is a decision on the petition, filed November 21, 2005 under 37 C.F.R. 1.102(c) and M.P.E.P. §708.02(IV): Applicant's Age, to make the above-identified application special.

A grantable petition under 37 C.F.R. 1.102(c), and M.P.E.P. §708.02, Section IV, must include evidence showing that the applicant is 65 years of age or more. Evidence in the form of a birth certificate or applicant's statement is sufficient. There is no fee required for such a petition.

The petition filed November 21, 2005 includes a statement that applicant's age is 68 yrs. (born August 02, 1938), thus the requirements set forth above are met.

The petition is **GRANTED**.

The application is being forwarded to the examiner to be advanced out of turn for examination in accordance with the procedures set forth in M.P.E.P. §708.02, "Handling of Petitions To Make Special" and M.P.E.P. §1309.

Michelle R. Eason for

Brian L. Johnson
Special Programs Examiner
Technology Center 2100
Computer Architecture, Software, and Information Security
(571)272-3595

UNITED STATES PATENT AND TRADEMARK OFFICE

Commissioner for Patents
United States Patent and Trademark Office
P.O. Box 1450
Alexandria, VA 22313-1450
www.uspto.gov

IPSG, P.C.
P.O. BOX 700640
SAN JOSE CA 95170-0640

COPY MAILED

NOV 0 3 2006

OFFICE OF PETITIONS

In re Application of :
Sophia W. Kao :
Application No. 10/789,791 : DECISION ON PETITION
Filed: February 27, 2004 : TO WITHDRAW
Attorney Docket No. RZMI-P321 : FROM RECORD
:

This is a decision on the Request to Withdraw as attorney or agent of record under 37 C.F.R. § 1.36(b) filed August 1, 2006.

The request is **NOT APPROVED**.

A grantable request to withdraw as attorney/agent of record must be signed by every attorney/agent seeking to withdraw or contain a clear indication that one attorney is signing on behalf of another/others. A request to withdraw will not be approved unless at least 30 (thirty) days would remain between the date of approval and the later of the expiration date of a time to file a response or the expiration date of the maximum time period which can be extended under 37 C.F.R. § 1.136(a).

The Office cannot approve the request at this time since the reasons provided do not meet any of the conditions under the mandatory or permissive categories enumerated in 37 CFR 10.40. Section 10.40 of Title 37 of the Code of Federal Regulation states, "[a] practitioner shall not withdraw from employment in a proceeding before the Office without permission from the Office[.]" More specifically, 37 CFR 10.40 states, "[i]f paragraph (b) of this section is not applicable, a practitioner may not request permission to withdraw in matter pending before the Office unless such request or such withdrawal is" for one the permissive reasons listed in 37 CFR 10.40(c). The reasons set forth in the request, "this request is being made because the assignee wishes to terminate representation", does not meet any the conditions set forth in 37 CFR 10.40.

In order to request or take action in a patent matter, the assignee must establish its ownership of the patent to the satisfaction of the Director. In this regard, a Statement under 37 CFR 3.73(b) must have either: (i) documentary evidence of a chain of title from the original owner to the assignee (*e.g.*, copy of an executed assignment), and a statement affirming that the documentary

evidence of the chain of title from the original owner to the assignee was or concurrently is being submitted for recordation pursuant to § 3.11; or (ii) a statement specifying where documentary evidence of a chain of title from the original owner to the assignee is recorded in the assignment records of the Office (*e.g.*, reel and frame number).

All future communications from the Office will continue to be directed to the above-listed address until otherwise notified by applicant.

There is an outstanding Office action mailed August 10, 2006 that requires a reply by the applicant.

Telephone inquiries concerning this decision should be directed to April Wise at 571-272-1642.

April M. Wise
Petitions Examiner
Office of Petitions

cc: RAZA MICROELECTRONICS, INC.
LEGAL DEPARTMENT
18920 FORGE DRIVE
CUPERTINO, CA 95014-0701

UNITED STATES PATENT AND TRADEMARK OFFICE

Commissioner for Patents
United States Patent and Trademark Office
P.O. Box 1450
Alexandria, VA 22313-1450
www.uspto.gov

ZILKA-KOTAB, PC- RMI
P.O. BOX 721120
SAN JOSE CA 95172-1120

COPY MAILED

NOV 13 2008

In re Application of
Sophia W. Kao
Application No. 10/789,791
Filed: February 27, 2004
Attorney Docket No. RMI1Po.15/RZMI-P0321-US

DECISION ON PETITION

This is a decision on the petition under the unintentional provisions of 37 CFR 1.137(b), filed October 9, 2008, to revive the above-identified application.

The petition is **GRANTED**.

This application became abandoned for failure to timely pay the issue fee on or before June 17, 2008, as required by the Notice of Allowance and Fee(s) Due, mailed March 17, 2008. Accordingly, the date of abandonment of this application is June 18, 2008.

The petition satisfies the requirements of 37 CFR 1.137(b) in that petitioner has supplied (1) the reply in the form of payment of the issue fee of $755.00, (2) the petition fee of $810.00; and (3) a proper statement of unintentional delay.

Telephone inquiries concerning this decision should be directed to undersigned at (571) 272-3213.

This application is being referred to Publishing Division for processing into a patent.

Cheryl Gibson-Baylor
Petitions Examiner
Office of Petitions

UNITED STATES PATENT AND TRADEMARK OFFICE

Commissioner for Patents
United States Patent and Trademark Office
P.O. Box 1450
Alexandria, VA 22313-1450
www.uspto.gov

AT&T CORP.
ROOM 2A207
ONE AT&T WAY
BEDMINSTER NJ 07921

COPY MAILED
SEP 26 2008

In re Application of	:	
William Turin	:	
Application No. 10/789,794	:	DECISION ON PETITION
Filed: February 28, 2004	:	
Attorney Docket No. TURIN 1999-0078CONT	:	

This is a decision on the petition under the unintentional provisions of 37 CFR 1.137(b), filed March 25, 2008, to revive the above-identified application.

The petition is **GRANTED**.

This application became abandoned for failure to timely pay the issue and publication fees on or before March 10, 2008, as required by the Notice of Allowance and Fee(s) Due, mailed December 10, 2007. Accordingly, the date of abandonment of this application is March 11, 2008. The Notice of Abandonment was mailed April 2, 2008.

The petition satisfies the requirements of 37 CFR 1.137(b) in that petitioner has supplied (1) the reply in the form of payment of the issue fee of $1,440 and the publication fee of $300, (2) the petition fee of $1,540; and (3) a proper statement of unintentional delay.

It is not apparent whether the person signing the statement of unintentional delay was in a position to have firsthand or direct knowledge of the facts and circumstances of the delay at issue. Nevertheless, such statement is being treated as having been made as the result of a reasonable inquiry into the facts and circumstances of such delay. See 37 CFR 10.18(b) and Changes to Patent Practice and Procedure; Final Rule Notice, 62 Fed. Reg. 53131, 53178 (October 10, 1997), 1203 Off. Gaz. Pat. Office 63, 103 (October 21, 1997). In the event that such an inquiry has not been made, petitioner must make such an inquiry. If such inquiry results in the discovery that it is not correct that the entire delay in filing the required reply from the due date for the reply until the filing of a grantable petition pursuant to 37 CFR 1.137(b) was unintentional, petitioner must notify the Office.

There is no indication that the person signing the petition was ever given a power of attorney to prosecute the application. If the person signing the petition desires to receive future correspondence regarding this application, the appropriate power of attorney document must be submitted.

Telephone inquiries concerning this decision should be directed to Terri Williams at (571) 272-2991.

This application is being referred to the Office of Data Management for processing into a patent.

Chris Bottorff
Petitions Examiner
Office of Petitions

UNITED STATES PATENT AND TRADEMARK OFFICE

Commissioner for Patents
United States Patent and Trademark Office
P.O. Box 1450
Alexandria, VA 22313-1450
www.uspto.gov

JONATHAN SPANGLER
NU VASIVE, INC.
4545 TOWNE CENTRE COURT
SAN DIEGO CA 92121

COPY MAILED

AUG 20 2008

In re Application of :
Patrick Miles, et al. :
Application No. 10/789,797 : DECISION ON PETITION
Filed: February 27, 2004 :
Attorney Docket No. :

This is a decision on the petition, filed December 20, 2007, which is being treated as a petition under 37 CFR 1.137(b) to revive the instant nonprovisional application for failure to timely notify the U.S. Patent and Trademark (USPTO) of the filing of an application in a foreign country, or under a multinational treaty that requires publication of applications eighteen months after filing. See 37 CFR 1.137(f).

The petition is **DISMISSED**.

Petitioner states that the instant non-provisional application is the subject of an application filed in a foreign country and the U. S. Patent and Trademark Office was unintentionally not notified of this filing within 45 days subsequent to the filing of the subject application in a foreign country. A review of the file record shows that a Request to Rescind was filed on December 20, 2007. However, petitioner did not notify the Office within the required time frame of filing the international application. Before proper determination on the merits of the petition can be decided, petition must supply a valid reason as to why the Office was not notified 45 days of filing the international application.

A grantable petition under 37 CFR 1.137(b) must be accompanied by: (1) the required reply, unless previously filed; (2) the petition fee as set forth in 37 CFR 1.17(m); (3) a statement that the entire delay in filing the required reply from the due date for the reply until the filing of a grantable petition pursuant to 37 CFR 1.137(b) was unintentional; and (4) any terminal disclaimer (and fee as set forth in 37 CFR 1.20(d)) required by 37 CFR 1.137(d). Where there is a question as to whether either

the abandonment or the delay in filing a petition under 37 CFR 1.137 was unintentional, the Director may require additional information. *See* MPEP 711.03(c) (II)(C) and (D). The instant petition lacks item (3).

There are three periods to be considered during the evaluation of a petition under 37 CFR 1.137(b):

(1) the delay in reply that originally resulted in the abandonment;

(2) the delay in filing an initial petition pursuant to 37 CFR 1.137(b) to revive the application; and

(3) the delay in filing a grantable petition pursuant to 37 CFR 1.137(b) to revive the application.

Currently, the delay has not been shown to the satisfaction of the Director to be unintentional for periods (1) and (2).

As to Period (1):

The patent statute at 35 U.S.C. § 41(a)(7) authorizes the Director to revive an "unintentionally abandoned application." The legislative history of Public Law 97-247 reveals that the purpose of 35 U.S.C. § 41(a)(7) is to permit the Office to have more discretion than in 35 U.S.C. §§ 133 or 151 to revive abandoned applications in appropriate circumstances, but places a limit on this discretion, stating that "[u]nder this section a petition accompanied by either a fee of $500 or a fee of $50 **would not be granted where the abandonment** or the failure to pay the fee for issuing the patent **was intentional** as opposed to being unintentional or unavoidable." [emphasis added]. See H.R. Rep. No. 542, 97th Cong., 2d Sess. 6-7 (1982), *reprinted in* 1982 U.S.C.C.A.N. 770-71. The revival of an intentionally abandoned application is antithetical to the meaning and intent of the statute and regulation.

35 U.S.C. § 41(a) (7) authorizes the Director to accept a petition "for the revival of an unintentionally abandoned application for a patent." As amended December 1, 1997, 37 CFR 1.137(b) (3) provides that a petition under 37 CFR 1.137(b) must be accompanied by a statement that the delay was unintentional, but provides that "[t]he Commissioner may require additional information where there is a question whether the delay was unintentional." Where, as here, there is a question whether the initial delay was unintentional, the petitioner must meet the burden of establishing that the delay was unintentional within the meaning of 35 U.S.C. § 41(a)(7) and 37 CFR 1.137(b). *See* In re Application of G, 11 USPQ2d 1378, 1380 (Comm'r Pats. 1989); 37

CFR 1.137(b). Here, in view of the inordinate delay (almost 3 ½ years) in resuming prosecution, there is a question whether the entire delay was unintentional. Petitioner should note that the issue is not whether some of the delay was unintentional by any party; rather, the issue is whether the entire delay has been shown to the satisfaction of the Director to be unintentional.

The question under 37 CFR 1.137(b) for period (1) is whether the delay on the part of the party having the right or authority to reply to avoid abandonment (or not reply) was unintentional. Accordingly, any renewed petition must clearly identify the party having the right to reply to avoid abandonment on November 10 2004. That party, in turn must explain what effort(s) was made to further notify the Office of the international application and, further, why the Office was not notified. If no effort was made to notify the Office of the international application, then that party must explain why the delay in this application does not result from a deliberate course of action (or inaction). Likewise, as John Spangler was counsel of record at the time of abandonment, Mr. Spangler and applicants should explain why this application became abandoned while it was under their control and what efforts were made to notify the office itself and with whom this matter was discussed outside of Nu Vasive, Inc. Copies of any correspondence relating to the filing, or to not filing a further reply to the outstanding Office action are required from responsible person(s), Mr Spangler, and whoever else was involved with this application at the time of abandonment. Statements are required from any and all persons then at Nu Vasive, and the responsible person(s) having firsthand knowledge of the circumstances surrounding the lack of a reply to the outstanding Office action. As the courts have made clear, it is pointless for the USPTO to revive a long abandoned application without an adequate showing that the delay did not result from a deliberate course of action. *See* Lawman Armor v. Simon, 2005 U.S. Dist. LEXIS 10843, 74 USPQ2d 1633 (DC EMich 2005); Field Hybrids, LLC v. Toyota Motor Corp., 2005 U.S. Dist. LEXIS 1159 (D. Minn Jan. 27, 2005); Lumenyte Int'l Corp. v. Cable Lite Corp., Nos. 96-1011, 96-1077, 1996 U.S. App. LEXIS 16400, 1996 WL 383927 (Fed. Cir. July 9, 1996) (unpublished) (patents held unenforceable due to a finding of inequitable conduct in submitting an inappropriate statement that the abandonment was unintentional).

As to Period (2):

Likewise, where the applicant deliberately chooses not to seek or persist in seeking the revival of an abandoned application, or where the applicant deliberately chooses to delay seeking the revival of an abandoned application, the resulting delay in seeking revival of the abandoned application cannot be considered

as "unintentional" within the meaning of 37 CFR 1.137(b). *See* MPEP 711.03(c).

The language of both 35 U.S.C. § 41(a)(7) and 37 CFR 1.137(b) are clear and unambiguous, and, furthermore, without qualification. That is, the delay in filing the reply during prosecution, as well as in filing the petition seeking revival, must have been, without qualification, "unintentional" for the reply to now be accepted on petition. The Office requires that the entire delay be at least unintentional as a prerequisite to revival of an abandoned application to prevent abuse and injury to the public. *See* H.R. Rep. No. 542, 97th Cong., 2d Sess. 7 (1982), reprinted in 1982 U.S.C.C.A.N. 771 ("[i]n order to prevent abuse and injury to the public the Commissioner . . . could require applicants to act promptly after becoming aware of the abandonment"). The December 1997 change to 37 CFR 1.137 did not create any new right to overcome an intentional delay in seeking revival, or in renewing an attempt at seeking revival, of an abandoned application. *See* Changes to Patent Practice and Procedure; Final Rule Notice, 62 Fed. Reg. 53131, 53160 (October 10, 1997), 1203 Off. Gaz. Pat. Office 63, 87 (October 21, 1997), which clearly stated that any protracted delay (here, over 3 ½ years) could trigger, as here, a request for additional information. As the courts have since made clear, a protracted delay in seeking revival, as here, requires a petitioner's detailed explanation seeking to excuse the delay as opposed to USPTO acceptance of a general allegation of unintentional delay. *See* Lawman Armor v. Simon, 2005 U.S. Dist. LEXIS 10843, 74 USPQ2d 1633, at 1637-8 (DC EMich 2005); Field Hybrids, LLC v. Toyota Motor Corp., 2005 U.S. Dist. LEXIS 1159 (D. Minn Jan. 27, 2005) at *21-*23. Statements are required from any and all persons then at Nu Vasive, Inc. and the responsible person(s) having firsthand knowledge of the circumstances surrounding the protracted delay, after the abandonment date, in seeking revival.

As noted in MPEP 711.03(c) (II), subsection D, in instances in which such petition was not filed within 1 year of the date of abandonment of the application, applicants should include:

> (A) the date that the applicant first became aware of the abandonment of the application; and
> (B) a showing as to how the delay in discovering the abandoned status of the application occurred despite the exercise of due care or diligence on the part of the applicant.

In either instance, applicant's failure to carry the burden of proof to establish that the "entire" delay was "unavoidable" or "unintentional" may lead to the denial of a petition under 37 CFR 1.137(b), regardless of the circumstances that originally

resulted in the abandonment of the application. *See also* New York University v. Autodesk, 2007 U.S. DIST LEXIS, U.S. District LEXIS 50832, *10 -*12 (S.D.N.Y. 2007) (protracted delay in seeking revival undercuts assertion of unintentional delay).

Any request for reconsideration of this decision must be submitted within **TWO (2) MONTHS** from the mail date of this decision. Extensions of time under 37 CFR 1.136(a) are permitted. The reconsideration request should include a cover letter entitled "Renewed Petition under 37 CFR 1.137(b)." This is **not** a final agency action within the meaning of 5 U.S.C. § 704.

Any renewed petition may be addressed as follows:

By Mail: Mail Stop PETITION
Commissioner for Patents
P. O. Box 1450
Alexandria, VA 22313-1450

By hand: U. S. Patent and Trademark Office
Customer Service Window, Mail Stop Petitions
Randolph Building
401 Dulany Street
Alexandria, VA 22314

The centralized facsimile number is **(571) 273-8300.**

Correspondence regarding this decision may also be filed through the electronic filing system of the USPTO.

To expedite consideration, petitioner may wish to contact the undersigned regarding the filing of the renewed petition under 37 CFR 1.137(f).

Telephone inquiries concerning this decision should be directed to the April Wise at (571) 272-1642.

Carl Friedman
Petitions Examiner
Office of Petitions

UNITED STATES PATENT AND TRADEMARK OFFICE

Commissioner for Patents
United States Patent and Trademark Office
P.O. Box 1450
Alexandria, VA 22313-1450
www.uspto.gov

JONATHAN SPANGLER
NU VASIVE, INC.
4545 TOWNE CENTRE COURT
SAN DIEGO CA 92121

COPY MAILED

JAN 30 2009

OFFICE OF PETITIONS

In re Application of :
Patrick Miles, et al. :
Application No. 10/789,797 : DECISION ON PETITION
Filed: February 27, 2004 :
Attorney Docket No. 014US1 :

This is also decision on the petition under the unintentional provisions of 37 CFR 1.137(b), filed December 31, 2007, to revive the above-identified application.

The application became abandoned for failure to reply in a timely manner to the non-final Office action mailed, June 16, 2006, which set a shortened statutory period for reply of three (3) months. No extensions of time under the provisions of 37 CFR 1.136(a) were obtained. Accordingly, the application became abandoned on September 17, 2006.

The petition satisfies the requirements of 37 CFR 1.137(b) in that petitioner has supplied (1) the reply in the form of an amendment, (2) the petition fee of $770, and (3) a proper statement of unintentional delay.

The petition is **Granted**, *nunc pro tunc*.

The Technology Center was without authority to act further in the case absent a grantable petition reviving this application after abandonment. Nevertheless, in view of this decision on petition, the amendment is now considered a proper filing and the actions of the Technology Center taken thereafter are hereby ratified.

A petition to revive under the unintentional provision of 37 CFR 1.137(f) was filed on December 20, 2007 with a fee of $770, the $770 fee submitted with the petition on December 31, 2007 is considered a duplicate payment and unnecessary. This fee will be credited to petitioner's deposit account.

Telephone inquiries concerning this decision should be directed to undersigned at (571) 272-1642. All other inquiries concerning this application should be directed to the Technology Center.

This application is being referred to Technology Center AU 3762 for appropriate action by the Examiner in the normal course of business on the reply received December 31, 2007.

April M. Wise
Petitions Examiner
Office of Petitions

UNITED STATES PATENT AND TRADEMARK OFFICE

Commissioner for Patents
United States Patent and Trademark Office
P.O. Box 1450
Alexandria, VA 22313-1450
www.uspto.gov

JONATHAN SPANGLER
NU VASIVE, INC.
4545 TOWNE CENTRE COURT
SAN DIEGO CA 92121

MAILED

FEB 11 2009

OFFICE OF PETITIONS

In re Application of
Patrick Miles, et al.
Application No. 10/789,797
Filed: February 27, 2004
Attorney Docket No. 014US1

DECISION ON PETITION
UNDER 37 CFR 1.137(b)

This is a decision on the renewed petition, filed December 5, 2008, which is being treated as a petition under 37 CFR 1.137(b) to revive the instant nonprovisional application for failure to timely notify the U.S. Patent and Trademark (USPTO) of the filing of an application in a foreign country, or under a multinational treaty that requires publication of applications eighteen months after filing. *See* 37 CFR 1.137(f).

The petition is **GRANTED**.

Petitioner states that the instant nonprovisional application is the subject of an application filed in an eighteen-month publication country on September 27, 2004. However, the USPTO was unintentionally not notified of this filing within 45 days subsequent to the filing of the subject application in an eighteen-month publication country.

In view of the above, this application became abandoned pursuant to 35 U.S.C. § 122(b)(2)(B)(iii) and 37 CFR 1.213(c) for failure to timely notify the Office of the filing of an application in a foreign country or under a multilateral international agreement that requires publication of applications 18 months after filing.

A petition to revive an application abandoned pursuant to 35 U.S.C. 122(b)(2)(B)(iii) for failure to notify the USPTO of a foreign filing must be accompanied by:

(1) the required reply which is met by the notification of such filing in a foreign country or under a multinational treaty;
(2) the petition fee as set forth in 37 CFR 1.17(m); and
(3) a statement that the entire delay in filing the required reply from the due date of the reply until the filing of a grantable petition was unintentional.

The instant petition has been found to be in compliance with 37 CFR 1.137(b). Accordingly, the failure to timely notify the USPTO of a foreign or international filing within 45 days after the date of filing of such foreign or international application as provided by 35 U.S.C. § 122(b)(2)(B)(iii) and 37 CFR 1.213(c) is accepted as having been unintentionally delayed.

The previous Request and Certification under 35 U.S.C. § 122(b)(2)(B)(i) has been rescinded. A Notice Regarding Rescission of Nonpublication Request which sets forth the projected publication date of October 23, 2008 accompanies this decision on petition.

There is no indication that the person signing the instant petition was ever given a power of attorney or authorization of agent to prosecute the above-identified application. In accordance with 37 CFR 1.34(a), the signature appearing on the petition shall constitute a representation to the United States Patent and Trademark Office that he/she is authorized to represent the particular party in whose behalf he/she acts. However, petitioner should file the appropriate power of attorney or authorization of agent must be submitted Nevertheless, all future correspondence regarding this application file will be directed solely to the address of record until otherwise instructed.

Telephone inquiries concerning this decision should be directed to April Wise at (571) 272-1642.

This application is being forwarded to Technology Center Art Unit 3762 for examination in due course.

Carl Friedman
Petitions Examiner
Office of Petitions

ATTACHMENT: Notice Regarding Rescission of Nonpublication Request

UNITED STATES PATENT AND TRADEMARK OFFICE

UNITED STATES DEPARTMENT OF COMMERCE
United States Patent and Trademark Office
Address: COMMISSIONER FOR PATENTS
P.O. Box 1450
Alexandria, Virginia 22313-1450
www.uspto.gov

APPLICATION NUMBER	FILING OR 371(C) DATE	FIRST NAMED APPLICANT	ATTY. DOCKET NO./TITLE
10/789,797	02/27/2004	Patrick Miles	014US1

CONFIRMATION NO. 9437

30328
JONATHAN SPANGLER
NU VASIVE, INC.
4545 TOWNE CENTRE COURT
SAN DIEGO, CA 92121

NONPUBLICATION RESCISSION LETTER

Date Mailed: 07/15/2008

Communication Regarding Rescission Of Nonpublication Request and/or Notice of Foreign Filing

Applicant's rescission of the previously-filed nonpublication request and/or notice of foreign filing is acknowledged. The paper has been reflected in the Patent and Trademark Office's (USPTO's) computer records so that the earliest possible projected publication date can be assigned.

The projected publication date is 10/23/2008.

If applicant rescinded the nonpublication request before or on the date of "foreign filing,"[1] then no notice of foreign filing is required.

If applicant foreign filed the application after filing the above application and before filing the rescission, and the rescission did not also include a notice of foreign filing, then a notice of foreign filing (not merely a rescission) is required to be filed within 45 days of the date of foreign filing. See 35 U.S.C. § 122(b)(2)(B)(iii), and Clarification of the United States Patent and Trademark Office's Interpretation of the Provisions of 35 U.S.C. § 122(b)(2)(B)(ii)-(iv), 1272 Off. Gaz. Pat. Office 22 (July 1, 2003).

If a notice of foreign filing is required and is not filed within 45 days of the date of foreign filing, then the application becomes abandoned pursuant to 35 U.S.C. § 122(b)(2)(B)(iii). In this situation, applicant should either file a petition to revive or notify the Office that the application is abandoned. See 37 CFR 1.137(f). Any such petition to revive will be forwarded to the Office of Petitions for a decision. Note that the filing of the petition will not operate to stay any period of reply that may be running against the application.

Questions regarding petitions to revive should be directed to the Office of Petitions at (571) 272-3282.

[1] Note, for purpose of this notice, that "foreign filing" means "filing an application directed to the same invention in another country, or under a multilateral international agreement, that requires publication of applications 18 months after filing".

/amwise/

Office of Data Management, Application Assistance Unit (571) 272-4000, or (571) 272-4200, or 1-888-786-0101

UNITED STATES PATENT AND TRADEMARK OFFICE

UNITED STATES DEPARTMENT OF COMMERCE
United States Patent and Trademark Office
Address: COMMISSIONER FOR PATENTS
P.O. Box 1450
Alexandria, Virginia 22313-1450
www.uspto.gov

PERKINS COIE LLP/MSFT
P. O. BOX 1247
SEATTLE, WA 98111-1247

Mail Date: 04/20/2010

Applicant	: Michael D. Smith	: DECISION ON REQUEST FOR
Patent Number	: 7577990	: RECALCULATION of PATENT
Issue Date	: 08/18/2009	: TERM ADJUSTMENT IN VIEW
Appliction No	: 10/789,808	: OF WYETH AND NOTICE OF INTENT TO
Filed	: 02/27/2004	: ISSUE CERTIFICATE OF CORRECTION
		:

The Request for Recalculation is **GRANTED** to the extent indicated.

The patent term adjustment has been determined to be **1040** days. The USPTO will *sua sponte* issue a certificate of correction reflecting the amount of PTA days determined by the recalculation.

Prior to the issuance of the certificate of correction, the USPTO will afford patentee an opportunity to be heard and request reconsideration. Accordingly, patentee has **one month or thirty (30) days**, whichever is longer, to file a request for reconsideration of this patent term adjustment calculation. See 35 U.S.C. 154(b)(3)(B)(ii) and 37 CFR 1.322(a)(4). No extensions of time will be granted under 37 CFR 1.136.

Patentee should use document code PET.OP if electronically filing a request for reconsideration of this patent term adjustment calculation. The patentee must also include the information required by 37 CFR 1.705(b)(2) and the fee required by 37 CFR 1.18(e). If patentee does not file a timely request for reconsideration of this patent term adjustment calculation including the information required by 37 CFR 1.705(b)(2) and the fee required by 37 CFR 1.18(e), the USPTO will issue a certificate of correction reflecting the PTA determination noted above.

Patentee should be aware that in order to preserve the right to review in the United States District Court for the District of Columbia of the USPTO patent term adjustment determination, patentee must ensure that he or she also take the steps required under 35 U.S.C. 154(b)(4)(A) in a timely manner. Nothing in the request for recalculation should be construed as providing an alternative time frame for commencing a civil action under 35 U.S.C. 154(b)(4)(A).

Any questions concerning this decision should be directed to the Office of Patent Legal Administration at 571-272-7702.

UNITED STATES PATENT AND TRADEMARK OFFICE

Commissioner for Patents
United States Patent and Trademark Office
P.O. Box 1450
Alexandria, VA 22313-1450
www.uspto.gov

BINGHAM, MCCUTCHEN LLP
THREE EMBARCADERO CENTER
18 FLOOR
SAN FRANCISCO, CA 94111-4067

COPY MAILED

FEB 15 2005

OFFICE OF PETITIONS

In re Application of
Goldberg et al.
Application No. 10/789,810
Filed: February 27, 2004
Attorney Docket No. CA7031042001
For: Method and System for Solving Satisfiability Problems

DECISION ACCORDING STATUS UNDER 37 CFR 1.47(a)

This is a decision on the petition under 37 CFR 1.47(a), filed October 1, 2004.

The petition is **granted**.

The above-identified application and papers have been reviewed and found in compliance with 37 CFR 1.47(a). This application is hereby accorded Rule 1.47(a) status.

As provided in Rule 1.47(c), this Office will forward notice of this application's filing to the non-signing inventor at the address given in the petition. Notice of the filing of this application will also be published in the Official Gazette.

On May 25, 2004, the Office of Initial Patent Examination ("OIPE") mailed a Notice of Missing Parts requiring the submission of a proper oath or declaration. OIPE will be informed the declaration filed on October 1, 2004, satisfies the requirements imposed by the Notice and that the application has been accorded status under 37 CFR 1.47(a).

Telephone inquiries should be directed to Petitions Attorney Steven Brantley at (571) 272-3203.

Charles Steven Brantley
Petitions Attorney
Office of Petitions

UNITED STATES PATENT AND TRADEMARK OFFICE

Commissioner for Patents
United States Patent and Trademark Office
P.O. Box 1450
Alexandria, VA 22313-1450
www.uspto.gov

Yakov Novikov
Mogilevskaya st
6-4-135
Minks, Belarus 220007
Country: BELARUS

COPY MAILED

FEB 15 2005

OFFICE OF PETITIONS

In re Application of
Goldberg et al.
Application No. 10/789,810
Filed: February 27, 2004
Attorney Docket No. CA7031042001
For: Method and System for Solving Satisfiability Problems

Letter

Dear Mr. Novikov:

You are named as a joint inventor in the above identified United States patent application, filed under the provisions of 35 U.S.C. 116 (United States Code), and 37 CFR 1.47(a), Rules of Practice in Patent Cases. Should a patent be granted on the application you will be designated therein as a joint inventor.

As a named inventor you are entitled to inspect any paper in the file wrapper of the application, order copies of all or any part thereof (at a prepaid cost per 37 CFR 1.19) or make your position of record in the application. Alternatively, you may arrange to do any of the preceding through a registered patent attorney or agent presenting written authorization from you. If you care to join the application, counsel of record (see below) would presumably assist you. Joining in the application would entail the filing of an appropriate oath or declaration by you pursuant to 37 CFR 1.63.

Requests for information regarding your application should be directed to the File Information Unit at (703)308-2733. Information regarding how to pay for and order a copy of the application, or a specific paper in the application, should be directed to Certification Division at (703)308-9726 or 1(800)972-6382 (outside the Washington D.C. area).

Telephone inquiries regarding this communication should be directed to Petitions Attorney Steven Brantley at (571) 272-3203.

Charles Steven Brantley
Petitions Attorney
Office of Petitions

cc: BINGHAM, MCCUTCHEN LLP
THREE EMBARCADERO CENTER
18 FLOOR
SAN FRANCISCO, CA 94111-4067

UNITED STATES PATENT AND TRADEMARK OFFICE

Commissioner for Patents
United States Patent and Trademark Office
P.O. Box 1450
Alexandria, VA 22313-1450
www.uspto.gov

MCDERMOTT WILL & EMBERY LLP.
28 STATE STREET
BOSTON, MA 02109-1775

MAILED

NOV 24 2009

OFFICE OF PETITIONS

In re Application of :
John G. BABISH et al. :
Application No. 10/789,814 : ON PETITION
Filed: February 27, 2004 :
Attorney Docket No. 068911-0075 :

This is a decision on the petition under 37 CFR 1.137(b), filed July 01, 2009, to revive the above-identified application.

The petition is **GRANTED**.

The above-identified application became abandoned for failure to reply in a timely manner to the Final Office action mailed November 05, 2008, which set a shortened statutory period for reply of three (3) months. A three (3) month extension of time under the provisions of 37 CFR 1.136(a) was obtained on May 04, 2009. Accordingly, the above-identified application became abandoned on May 06, 2009.

The petition satisfies the conditions for revival pursuant to the provisions of 37 CFR 1.137(b) in that (1) the reply in the form of an amendment; (2) the petition fee of $1620; and (3) the required statement of unintentional delay have been received. Accordingly, the reply to the final Office action of November 05, 2008 is accepted as having been unintentionally delayed.

Telephone inquiries concerning this decision should be directed to Ella Colbert at 571-272-6051 or in her absence David A. Bucci at (571) 272-7099.

The application file is being referred to Technology Center AU 1617 for appropriate action on the concurrently filed terminal disclaimer.

David Bucci
Petitions Examiner
Office of Petitions

UNITED STATES PATENT AND TRADEMARK OFFICE

Commissioner for Patents
United States Patent and Trademark Office
P. O. Box 1450
Alexandria, VA 22313-1450
www.uspto.gov

KNOBBE MARTENS OLSON & BEAR LLP
2040 MAIN STREET
FOURTEENTH FLOOR
IRVINE, CA 92614

COPY MAILED

JUL 20 2007

OFFICE OF PETITIONS

In re Application of :
Kenneth W. Baum :
Application No. 10/789,815 :
Filed: February 27, 2004 :
Attorney Docket No. MIC.025A :

DECISION GRANTING PETITION
UNDER 37 CFR 1.137(b)

This is a decision on the petition, filed March 22, 2007, which is being treated as a petition under 37 CFR 1.137(b) to revive the instant nonprovisional application for failure to timely notify the U.S. Patent and Trademark (USPTO) of the filing of an application in a foreign country, or under a multinational treaty that requires publication of applications eighteen months after filing. *See* 37 CFR 1.137(f).

The petition is **GRANTED**.

Petitioner states that the instant nonprovisional application is the subject of an application filed in an eighteen-month publication country on December 30, 2004. However, the USPTO was unintentionally not notified of this filing within 45 days subsequent to the filing of the subject application in an eighteen-month publication country.

In view of the above, this application became abandoned pursuant to 35 U.S.C. § 122(b)(2)(B)(iii) and 37 CFR 1.213(c) for failure to timely notify the Office of the filing of an application in a foreign country or under a multilateral international agreement that requires publication of applications 18 months after filing.

A petition to revive an application abandoned pursuant to 35 U.S.C. 122(b)(2)(B)(iii) for failure to notify the USPTO of a foreign filing must be accompanied by:

(1) the required reply which is met by the notification of such filing in a foreign country or under a multinational treaty;
(2) the petition fee as set forth in 37 CFR 1.17(m); and
(3) a statement that the entire delay in filing the required reply from the due date of the reply until the filing of a grantable petition was unintentional.

The instant petition has been found to be in compliance with 37 CFR 1.137(b). Accordingly, the failure to timely notify the USPTO of a foreign or international filing within 45 days after the date of filing of such foreign or international application as provided by 35 U.S.C. § 122(b)(2)(B)(iii) and 37 CFR 1.213(c) is accepted as having been unintentionally delayed.

The previous Request and Certification under 35 U.S.C. § 122(b)(2)(B)(i) has been rescinded. A Notice Regarding Rescission of Nonpublication Request which sets forth the projected publication date of accompanies this decision on petition.

Telephone inquiries concerning this decision should be directed to the undersigned at (571) 272-3222.

This application is being forwarded to Technology Center Art Unit 2878 for examination in due course.

Kenya A. McLaughlin
Petitions Attorney
Office of Petitions

ATTACHMENT: Notice Regarding Rescission of Nonpublication Request

UNITED STATES PATENT AND TRADEMARK OFFICE

UNITED STATES DEPARTMENT OF COMMERCE
United States Patent and Trademark Office
Address: COMMISSIONER FOR PATENTS
P.O. Box 1450
Alexandria, Virginia 22313-1450
www.uspto.gov

APPLICATION NUMBER	FILING/RECEIPT DATE	FIRST NAMED APPLICANT	ATTY. DOCKET NO.
10/789,815	02/27/2004	Kenneth W. Baun	MIC.025A

CONFIRMATION NO. 5653

20995
KNOBBE MARTENS OLSON & BEAR LLP
2040 MAIN STREET
FOURTEENTH FLOOR
IRVINE, CA 92614

Date Mailed: 07/17/2007

Communication Regarding Rescission Of Nonpublication Request and/or Notice of Foreign Filing

Applicant's rescission of the previously-filed nonpublication request and/or notice of foreign filing is acknowledged. The paper has been reflected in the Patent and Trademark Office's (USPTO's) computer records so that the earliest possible projected publication date can be assigned.

The projected publication date is 10/25/2007.

If applicant rescinded the nonpublication request before or on the date of "foreign filing,"[1] then no notice of foreign filing is required.

If applicant foreign filed the application after filing the above application and before filing the rescission, and the rescission did not also include a notice of foreign filing, then a notice of foreign filing (not merely a rescission) is required to be filed within 45 days of the date of foreign filing. See 35 U.S.C. § 122(b)(2)(B)(iii), and Clarification of the United States Patent and Trademark Office's Interpretation of the Provisions of 35 U.S.C. § 122(b)(2)(B)(ii)-(iv), 1272 Off. Gaz. Pat. Office 22 (July 1, 2003).

If a notice of foreign filing is required and is not filed within 45 days of the date of foreign filing, then the application becomes abandoned pursuant to 35 U.S.C. § 122(b)(2)(B)(iii). In this situation, applicant should either file a petition to revive or notify the Office that the application is abandoned. See 37 CFR 1.137(f). Any such petition to revive will be forwarded to the Office of Petitions for a decision. Note that the filing of the petition will not operate to stay any period of reply that may be running against the application.

Questions regarding petitions to revive should be directed to the Office of Petitions at (571) 272-3282. Questions regarding publications of patent applications should be directed to the patent application publication hotline at (703) 605-4283 or by e-mail pgpub@uspto.gov.

[1] Note, for purpose of this notice, that "foreign filing" means "filing an application directed to the same invention in another country, or under a multilateral international agreement, that requires publication of applications 18 months after filing".

UNITED STATES PATENT AND TRADEMARK OFFICE

Technology Center 3700

Troutman Sanders LLP
600 Peachtree Street, N.E.
Bank of America Plaza, Suite 5200
Atlanta, GA 30308-2216

MAILED

JUN 28 2005

Director's Office
Group 3700

In re Application of :
DABROWA ET AL :
Serial No.10/789,845 : DECISION ON PETITION
Filed February 27, 2004 :
For: System and Method of Producing :
Multi-colored Carpets :

This is a decision on petitioner's request to permit color photographs filed August 24, 2004.

The use of color photographs is provided in MPEP 608.02 with reference to color drawing as part of 37 CFR 1.84(a)(2). This rule was recently changed in a final rules package and published in the Federal Register, Volume 65, No. 183, dated September 20, 2000. The rule states "on rare occasions, color drawings may be necessary as the **only** practical medium by which to disclose the subject matter to be sought to be patented in a utility...application." Petitioner provides that he believes that color drawings of Figs. 1A, 1B, 2 and 3 are the only practical medium to disclose the subject matter related to the multicolored patterns of carpet produced by the present invention, a color palette generated by the present invention and a loading report incorporating colors to laod in the tufting machine of the present invention. Upon review of the drawing in question it is believed that color drawing would greatly enhance the understanding of the invention.

In as much as Petitioner has provided clear and convincing evidence that the color drawings are necessary for understanding of the invention as required under 37 CFR 1.84(a)(2) the petition for entry of color photographs is **granted**.

John J. Calvert
Supervisory Patent Examiner
Art Unit 3765
Phone: (571) 272-4983
Fax: (571) 273-4983

UNITED STATES PATENT AND TRADEMARK OFFICE

Commissioner for Patents
United States Patent and Trademark Office
P.O. Box 1450
Alexandria, VA 22313-1450
www.uspto.gov

VICTOR ELI VELAZQUEZ
P.O. BOX 8538
HUMACAO, PR 00792

COPY MAILED

DEC 17 2004

OFFICE OF PETITIONS

In re Application of :
Victor E. Velazquez :
Application No. 10/789,855 : ON PETITION
Filed: February 27, 2004 :
Attorney Docket No. :

This is a decision on the petition, filed November 15, 2004, to correct the inventor's name.

The petition is **granted.**

Telephone inquiries concerning this matter may be directed to Irvin Dingle at (571) 272-3210.

Irvin Dingle
Petitions Examiner
Office of Petitions
Office of the Deputy Commissioner
for Patent Examination Policy

Attachment: Corrected Filing Receipt

UNITED STATES PATENT AND TRADEMARK OFFICE

Commissioner for Patents
United States Patent and Trademark Office
P.O. Box 1450
Alexandria, VA 22313-1450
www.uspto.gov

WARD AND SMITH, P.A.
1001 COLLEGE COURT, P.O. BOX 867
NEW BERN NC 28563-0867

COPY MAILED

MAR 0 2 2009

OFFICE OF PETITIONS

In re Application of :
James M. CAMPOS, et al :
Application No. 10/789,861 : DECISION ON PETITION
Filed: February 27, 2004 : TO WITHDRAW
Attorney Docket No. 071865-00002 : FROM RECORD
:

This is a decision on the Request to Withdraw as attorney or agent under 37 C.F.R. § 1.36(b) filed January 19, 2009.

The request is **NOT APPROVED**.

A review of the file record indicates that E. Eric Mills. does not have power of attorney in this patent application. See 37 C.F.R. § 10.40. Accordingly, the request to withdraw under 37 C.F.R. § 1.36(b) is not applicable.

All future communications from the Office will continue to be directed to the above-identified address until otherwise properly notified by the applicant.

Telephone inquires concerning this decision should be directed to the undersigned at 571-272-6735.

Diane Goodwyn
Petitions Examiner
Office of Petitions

UNITED STATES PATENT AND TRADEMARK OFFICE

Commissioner for Patents
United States Patent and Trademark Office
P.O. Box 1450
Alexandria, VA 22313-1450
www.uspto.gov

ROBERT D. BUYAN
STOUT, UXA, BUYAN & MULLINS, LLP
4 VENTURE, SUITE 300
IRVINE CA 92612

COPY MAILED

JUL 0 3 2007

OFFICE OF PETITIONS

In re Application of	:	
SORENSEN, et al.	:	
Application No. 10/789,864	:	DECISION ON PETITION
Filed: February 27, 2004	:	TO WITHDRAW
Attorney Docket No. **SAFTY-001BCG**	:	FROM RECORD

This is a decision on the Request to Withdraw as attorney or agent of record under 37 C.F.R. § 1.36(b), filed December 8, 2006.

The request is **APPROVED.**

A grantable request to withdraw as attorney/agent of record must be signed by every attorney/agent seeking to withdraw or contain a clear indication that one attorney is signing on behalf of another/others. A request to withdraw will not be approved unless at least 30 (thirty) days would remain between the date of approval and the later of the expiration date of a time to file a response or the expiration date of the maximum time period which can be extended under 37 C.F.R. § 1.136(a).

The request was signed by Robert D. Buyan on behalf of all attorneys of record. All attorneys/agents associated have been withdrawn. Applicant is reminded that there is no attorney of record at this time.

The request to change the correspondence of record is not acceptable as the requested correspondence address is not that of: (1) the first named signing inventor; or (2) an intervening assignee of the entire interest under 37 C.F.R 3.71. All future communications from the Office will be directed to the first named signing inventor at the first copied address below until otherwise properly notified by the applicant.

There is an outstanding Office action mailed October 24, 2006 that requires a reply from the applicant. Telephone inquiries concerning this decision should be directed to the undersigned at 571-272-7253.

Monica A. Graves
Petitions Examiner
Office of Petitions

cc: **JOHN T. SORENSEN**
2402 HARBER BLVD, APT 207
COSTA MESA, CA 92626

cc: **VIRGINIA C. GORDON**
SAFTEST DIVISION, MP BIOMEDICALS
15 MORGAN
IRVINE, CA 92618

UNITED STATES PATENT AND TRADEMARK OFFICE

Commissioner for Patents
United States Patent and Trademark Office
P.O. Box 1450
Alexandria, VA 22313-1450
www.uspto.gov

YAHOO C/O MOFO PALO ALTO
755 PAGE MILL ROAD
PALO ALTO, CA 94304

MAILED

MAY 13 2010

OFFICE OF PETITIONS

In re Application of	:	
Souders et al.	:	DECISION ON PETITION
Application No. 10/789,869	:	TO WITHDRAW
Filed: February 26, 2004	:	FROM RECORD
Attorney Docket No. 085804-700500	:	

This is a decision on the Request to Withdraw as attorney or agent of record under 37 C.F.R. § 1.36(b), filed March 17, 2010.

The request is **NOT APPROVED** because it is moot.

A review of the file record indicates that on May 7, 2010 the power of attorney to YAHOO C/O MOFO PALO ALTO was revoked by the assignee of the patent application. Accordingly, the request to withdraw under 37 C.F.R. § 1.36(b) is moot.

All future communications from the Office will be directed to the below-listed address until otherwise notified by applicant.

Telephone inquires concerning this decision should be directed to the undersigned at 571-272-7751. All other inquires concerning either the examination or status of the application should be directed to the Technology Center.

Joan Olszewski
Petitions Examiner
Office of Petitions

cc: YAHOO! INC. C/O GREENBERG TRAURIG, LLP
MET LIFE BUILDING
200 PARK AVENUE
NEW YORK NY 10166

SPE RESPONSE FOR CERTIFICATE OF CORRECTION

Paper No.: _____

DATE : 8/12/2008

TO SPE OF : ART UNIT 2800 (2818)

SUBJECT : Request for Certificate of Correction on Patent No.: 7,394,157

Attn: Dao Nguyen

A response is requested with respect to the accompanying request for a certificate of correction.

Please complete this form and forward within 7 days to: Scanning customer Support

Send copy also via PTO mail to:
Certificates of Correction Branch – 2900 South Tower 9A39A
Palm location 7580 - Tel. No. 308-8309

With respect to the change(s) requested, correcting Office and/or Applicant's errors, should the patent read as shown in the certificate of correction? No new matter should be introduced, nor should the scope or meaning of the claims be changed.

*Ok to enter dependency change to claim 28 as req. in cofc?

Ernest C. White, LIE - 308-9390x122
Certificates of Correction Branch

Thank You For Your Assistance

The request for issuing the above-identified correction(s) is hereby:
Note your decision on the appropriate box.

☒ Approved	All changes apply.
☐ Approved in Part	Specify below which changes do not apply.
☐ Denied	State the reasons for denial below.

Comments:

_____

_____

_____

_____

_____

Steven Lohe AV 2818

SPE Art

SPE RESPONSE FOR CERTIFICATE OF CORRECTION

Paper No.: _____

DATE : **8/12/2008**

TO SPE OF : ART UNIT **2800 (2818)**

SUBJECT : Request for Certificate of Correction on Patent No.: **7,394,157**

Attn: Dao Nguyen

A response is requested with respect to the accompanying request for a certificate of correction.

Please complete this form and forward within **7** days to: **Scanning customer Support**

Send copy also via PTO mail to:
Certificates of Correction Branch – 2900 South Tower 9A39A
Palm location **7580** - Tel. No. 308-8309

With respect to the change(s) requested, correcting Office and/or Applicant's errors, should the patent read as shown in the certificate of correction? No new matter should be introduced, nor should the scope or meaning of the claims be changed.

***Ok to enter dependency change to claim 28 as req. in cofc?**

Ernest C. White, LIE - 308-9390x122
Certificates of Correction Branch

Thank You For Your Assistance

The request for issuing the above-identified correction(s) is hereby:
Note your decision on the appropriate box.

☒ **Approved**	**All** changes apply.
☐ **Approved in Part**	Specify below which changes **do not** apply.
☐ **Denied**	State the reasons for denial below.

Comments:

_____

_____

_____

_____

_____

Steven Lobe — AU 2818

SPE Art

UNITED STATES PATENT AND TRADEMARK OFFICE

Commissioner for Patents
United States Patent and Trademark Office
P.O. Box 1450
Alexandria, VA 22313-1450
www.uspto.gov

HARNESS, DICKEY & PIERCE, P.L.C.
P.O. BOX 828
BLOOMFIELD HILLS MI 48303

COPY MAILED

JAN 18 2008

OFFICE OF PETITIONS

In re Application of	:	
Hosomi et al.	:	
Application No. 10/789914	:	DECISION ON PETITION
Filed: 02/27/2004	:	UNDER 37 CFR 1.78(a)(3)
Attorney Docket No. 2497-000002/CP	:	

This is a decision in reference to the paper filed on October 4, 2007, which is treated as a petition under 37 CFR 1.78(a)(3) to accept an unintentionally delayed claim under 35 U.S.C. §§ 120 and 365(c) for the benefit of priority to prior-filed international Application No. PCT/JP02/08845, filed on August 30, 2002, as set forth in the Application Data Sheet (ADS) filed on January 10, 2008.

The petition is **GRANTED.**

A petition for acceptance of a claim for late priority under 37 CFR 1.78(a)(3) is only applicable to those applications filed on or after November 29, 2000. Further, the petition is appropriate only after the expiration of the period specified in 37 CFR 1.78(a)(2)(ii). In addition, the petition under 37 CFR 1.78(a)(3) must be accompanied by:

(1) the reference required by 35 U.S.C. § 120 and 37 CFR 1.78(a)(2)(i) of the prior-filed application, unless previously submitted;

(2) the surcharge set forth in § 1.17(t); and

(3) a statement that the entire delay between the date the claim was due under 37 CFR 1.78(a)(2)(ii) and the date the claim was filed was unintentional. The Director may require additional information where there is a question whether the delay was unintentional.

All of the above requirements having been satisfied, the late claim for priority under 35 U.S.C. §§ 120 and 365(c) is accepted as being unintentionally delayed.

The granting of the petition to accept the delayed benefit claim to the prior-filed application under 37 CFR 1.78(a)(3) should not be construed as meaning that the application is entitled to the benefit of the prior-filed application. In order for the application to be entitled to the benefit of the prior-filed application, all other requirements under 35 U.S.C. §§ 120 and 365(c) and 37 CFR 1.78(a)(1) and (a)(2) must be met. Similarly, the fact that the corrected

Filing Receipt accompanying this decision on petition includes the prior-filed application should not be construed as meaning that applicant is entitled to the claim for benefit of priority to the prior-filed application noted thereon. Accordingly, the examiner will, in due course, consider this benefit claim and determine whether the application is entitled to the benefit of the earlier filing date.

A corrected Filing Receipt, which includes the priority claim to the prior-filed application, accompanies this decision on petition.

Any inquiries concerning this decision may be directed to Senior Petitions Attorney Douglas I. Wood at (571) 272-3231. All other inquiries concerning either the examination procedures or status of the application should be directed to the Technology Center.

This application is being forwarded to the examiner of Technology Center Art Unit 1714 for consideration of applicant's entitlement to claim benefit of priority under 35 U.S.C. §§ 120 and 365(c) to the above-noted, prior-filed PCT application.

Anthony Knight
Supervisor
Office of Petitions

ATTACHMENT: Corrected Filing Receipt

UNITED STATES PATENT AND TRADEMARK OFFICE

UNITED STATES DEPARTMENT OF COMMERCE
United States Patent and Trademark Office
Address: COMMISSIONER FOR PATENTS
P.O. Box 1450
Alexandria, Virginia 22313-1450
www.uspto.gov

APPLICATION NUMBER	FILING or 371(c) DATE	GRP ART UNIT	FIL FEE REC'D	ATTY.DOCKET.NO	TOT CLAIMS	IND CLAIMS
10/789,914	02/27/2004	1714	1200	2497-000002/CP	19	1

CONFIRMATION NO. 8905

CORRECTED FILING RECEIPT

27572
HARNESS, DICKEY & PIERCE, P.L.C.
P.O. BOX 828
BLOOMFIELD HILLS, MI 48303

Date Mailed: 01/18/2008

Receipt is acknowledged of this non-provisional patent application. The application will be taken up for examination in due course. Applicant will be notified as to the results of the examination. Any correspondence concerning the application must include the following identification information: the U.S. APPLICATION NUMBER, FILING DATE, NAME OF APPLICANT, and TITLE OF INVENTION. Fees transmitted by check or draft are subject to collection. Please verify the accuracy of the data presented on this receipt. **If an error is noted on this Filing Receipt, please write to the Office of Initial Patent Examination's Filing Receipt Corrections. Please provide a copy of this Filing Receipt with the changes noted thereon. If you received a "Notice to File Missing Parts" for this application, please submit any corrections to this Filing Receipt with your reply to the Notice. When the USPTO processes the reply to the Notice, the USPTO will generate another Filing Receipt incorporating the requested corrections**

Applicant(s)

Takeshi Hosomi, Tokyo, JAPAN;
Masako Yamashita, Joetsu-shi, JAPAN;
Takayuki Baba, Tokyo, JAPAN;
Kentaro Yabuki, Soja-shi, JAPAN;

Assignment For Published Patent Application

SUMITOMO BAKELITE COMPANY LIMITED, Tokyo, JAPAN

Power of Attorney: The patent practitioners associated with Customer Number 27572

Domestic Priority data as claimed by applicant

This application is a CIP of PCT/JP02/08845 08/30/2002

Foreign Applications

JAPAN 2001-264385 08/31/2001

If Required, Foreign Filing License Granted: 05/25/2004

The country code and number of your priority application, to be used for filing abroad under the Paris Convention, is **US 10/789,914**

Projected Publication Date: Not Applicable

Non-Publication Request: No

Early Publication Request: No

Title

RESIN COMPOSITION, PREPREG, LAMINATE, AND SEMICONDUCTOR PACKAGE

Preliminary Class

524

PROTECTING YOUR INVENTION OUTSIDE THE UNITED STATES

Since the rights granted by a U.S. patent extend only throughout the territory of the United States and have no effect in a foreign country, an inventor who wishes patent protection in another country must apply for a patent in a specific country or in regional patent offices. Applicants may wish to consider the filing of an international application under the Patent Cooperation Treaty (PCT). An international (PCT) application generally has the same effect as a regular national patent application in each PCT-member country. The PCT process **simplifies** the filing of patent applications on the same invention in member countries, but **does not result** in a grant of "an international patent" and does not eliminate the need of applicants to file additional documents and fees in countries where patent protection is desired.

Almost every country has its own patent law, and a person desiring a patent in a particular country must make an application for patent in that country in accordance with its particular laws. Since the laws of many countries differ in various respects from the patent law of the United States, applicants are advised to seek guidance from specific foreign countries to ensure that patent rights are not lost prematurely.

Applicants also are advised that in the case of inventions made in the United States, the Director of the USPTO must issue a license before applicants can apply for a patent in a foreign country. The filing of a U.S. patent application serves as a request for a foreign filing license. The application's filing receipt contains further information and guidance as to the status of applicant's license for foreign filing.

Applicants may wish to consult the USPTO booklet, "General Information Concerning Patents" (specifically, the section entitled "Treaties and Foreign Patents") for more information on timeframes and deadlines for filing foreign patent applications. The guide is available either by contacting the USPTO Contact Center at 800-786-9199, or it can be viewed on the USPTO website at http://www.uspto.gov/web/offices/pac/doc/general/index.html.

For information on preventing theft of your intellectual property (patents, trademarks and copyrights), you may wish to consult the U.S. Government website, http://www.stopfakes.gov. Part of a Department of Commerce initiative, this website includes self-help "toolkits" giving innovators guidance on how to protect intellectual property in specific countries such as China, Korea and Mexico. For questions regarding patent enforcement issues, applicants may call the U.S. Government hotline at 1-866-999-HALT (1-866-999-4158).

LICENSE FOR FOREIGN FILING UNDER

Title 35, United States Code, Section 184

Title 37, Code of Federal Regulations, 5.11 & 5.15

GRANTED

The applicant has been granted a license under 35 U.S.C. 184, if the phrase "IF REQUIRED, FOREIGN FILING LICENSE GRANTED" followed by a date appears on this form. Such licenses are issued in all applications where the conditions for issuance of a license have been met, regardless of whether or not a license may be required as

set forth in 37 CFR 5.15. The scope and limitations of this license are set forth in 37 CFR 5.15(a) unless an earlier license has been issued under 37 CFR 5.15(b). The license is subject to revocation upon written notification. The date indicated is the effective date of the license, unless an earlier license of similar scope has been granted under 37 CFR 5.13 or 5.14.

This license is to be retained by the licensee and may be used at any time on or after the effective date thereof unless it is revoked. This license is automatically transferred to any related applications(s) filed under 37 CFR 1.53(d). This license is not retroactive.

The grant of a license does not in any way lessen the responsibility of a licensee for the security of the subject matter as imposed by any Government contract or the provisions of existing laws relating to espionage and the national security or the export of technical data. Licensees should apprise themselves of current regulations especially with respect to certain countries, of other agencies, particularly the Office of Defense Trade Controls, Department of State (with respect to Arms, Munitions and Implements of War (22 CFR 121-128)); the Bureau of Industry and Security, Department of Commerce (15 CFR parts 730-774); the Office of Foreign AssetsControl, Department of Treasury (31 CFR Parts 500+) and the Department of Energy.

NOT GRANTED

No license under 35 U.S.C. 184 has been granted at this time, if the phrase "IF REQUIRED, FOREIGN FILING LICENSE GRANTED" DOES NOT appear on this form. Applicant may still petition for a license under 37 CFR 5.12, if a license is desired before the expiration of 6 months from the filing date of the application. If 6 months has lapsed from the filing date of this application and the licensee has not received any indication of a secrecy order under 35 U.S.C. 181, the licensee may foreign file the application pursuant to 37 CFR 5.15(b).

UNITED STATES PATENT AND TRADEMARK OFFICE

UNITED STATES DEPARTMENT OF COMMERCE
United States Patent and Trademark Office
Address: COMMISSIONER FOR PATENTS
P.O. Box 1450
Alexandria, Virginia 22313-1450
www.uspto.gov

HARNESS, DICKEY & PIERCE, P.L.C.
P.O. BOX 828
BLOOMFIELD HILLS, MI 48303

Mail Date: 04/21/2010

Applicant	: Yoichi Miyasaka	: DECISION ON REQUEST FOR
Patent Number	: 7592032	: RECALCULATION of PATENT
Issue Date	: 09/22/2009	: TERM ADJUSTMENT IN VIEW
Appliction No	: 10/789,934	: OF WYETH AND NOTICE OF INTENT TO
Filed	: 02/27/2004	: ISSUE CERTIFICATE OF CORRECTION
		:

The Request for Recalculation is **GRANTED** to the extent indicated.

The patent term adjustment has been determined to be **1441** days. The USPTO will *sua sponte* issue a certificate of correction reflecting the amount of PTA days determined by the recalculation.

Prior to the issuance of the certificate of correction, the USPTO will afford patentee an opportunity to be heard and request reconsideration. Accordingly, patentee has **one month or thirty (30) days**, whichever is longer, to file a request for reconsideration of this patent term adjustment calculation. See 35 U.S.C. 154(b)(3)(B)(ii) and 37 CFR 1.322(a)(4). No extensions of time will be granted under 37 CFR 1.136.

Patentee should use document code PET.OP if electronically filing a request for reconsideration of this patent term adjustment calculation. The patentee must also include the information required by 37 CFR 1.705(b)(2) and the fee required by 37 CFR 1.18(e). If patentee does not file a timely request for reconsideration of this patent term adjustment calculation including the information required by 37 CFR 1.705(b)(2) and the fee required by 37 CFR 1.18(e), the USPTO will issue a certificate of correction reflecting the PTA determination noted above.

Patentee should be aware that in order to preserve the right to review in the United States District Court for the District of Columbia of the USPTO patent term adjustment determination, patentee must ensure that he or she also take the steps required under 35 U.S.C. 154(b)(4)(A) in a timely manner. Nothing in the request for recalculation should be construed as providing an alternative time frame for commencing a civil action under 35 U.S.C. 154(b)(4)(A).

Any questions concerning this decision should be directed to the Office of Patent Legal Administration at 571-272-7702.

SPE RESPONSE FOR CERTIFICATE OF CORRECTION

DATE : 11-15-01 Paper No.: __

TO SPE OF : ART UNIT 2800

SUBJECT : Request for Certificate of Correction on Patent No.: 6789948

A response is requested with respect to the accompanying request for a certificate of correction.

Please complete this form and return with file, within 7 days to:
Certificates of Correction Branch - PK 3-915
Palm location 7580 - Tel. No. 305-8309

With respect to the change(s) requested, correcting Office and/or Applicant's errors, should the patent read as shown in the certificate of correction? No new matter should be introduced, nor should the scope or meaning of the claims be changed.

Please check Claims

Thank You For Your Assistance

Certificates of Correction Branch

The request for issuing the above-identified correction(s) is hereby:
Note your decision on the appropriate box.

- ☒ Approved — All changes apply.
- ☐ Approved in Part — Specify below which changes do not apply.
- ☐ Denied — State the reasons for denial below.

Comments:

EDWARD J. GLICK
SUPERVISORY PATENT EXAMINER

2882
Art Unit

PTOL-306 (REV. 7/03)

U.S. DEPARTMENT OF COMMERCE Patent and Trademark

UNITED STATES PATENT AND TRADEMARK OFFICE

Commissioner for Patents
United States Patent and Trademark Office
P.O. Box 1450
Alexandria, VA 22313-1450
www.uspto.gov
DIW 09-04

FISH & RICHARDSON, P.C.
3300 DAIN RAUSCHER PLAZA
60 SOUTH SIXTH STREET
MINNEAPOLIS MN 55402

COPY MAILED

SEP 0 7 2004

OFFICE OF PETITIONS

In re Application of :
Lauterbach et al. :
Application No. 10/789,949 : ON PETITION
Filed: 27 February, 2004 :
Attorney's Docket No. 13913-166001/2003P00111 U :

This is a decision on the petition filed on 16 June, 2004, requesting that the above-identified application be accorded a filing date of 27 February, 2004, with Figures 19 and 20 described in the specification as a part of the original disclosure.

The petition is granted.

The application was filed on 27 February, 2004.

Accordingly, on 26 May, 2004, Initial Patent Examination Division mailed a Notice to File Missing Parts of Nonprovisional Application, stating that, *inter alia*, the application had been accorded a filing date of 26 May, 2004, but that Figures 19 and 20 described in the specification appeared to have been omitted. The statutory basic filing fee, additional claim fees, an oath or declaration, and a surcharge for their late filing was also required.

In response, on 16 June, 2004, the present petition and 18 sheets of drawings, including two (2) sheets of drawings containing Figures 19 & 20 described in the specification was filed. The fees and an executed oath or declaration were also filed.

Petitioners argue that the sheets of drawings containing Figures 19 and 20 were filed with the other application papers on 27 February, 2004, but were subsequently misplaced in the U.S. Patent and Trademark Office (Office). In support, a copy of

petitioners' postcard receipt was supplied with the present petition. The postcard receipt shows an Office date stamp of 02/27/04, the above-identified application number, and identifies the application by the first named inventor's name, attorney docket number, and invention title, and acknowledges receipt of, *inter alia*, "Drawings (formal, 18 sheets)". Petitioners request that the application, including two (2) sheet of drawings containing Figures 18 & 19 described in the specification, be accorded a filing date of 27 February, 2004.

A review of the record reveals that no sheets of drawings containing Figures 18 & 19 described in the specification has been located among the application papers received on 27 February, 2004. However, the evidence is convincing that the application papers deposited on 27 February, 2004, included 18 sheets of formal drawings, two (2) of which included Figures 19 & 20 described in the specification, which were subsequently misplaced in the Office. Therefore, the application, including two (2) sheet of drawings containing Figures 18 and 19 described in the specification, is entitled to a filing date of 27 February, 2004.

The "Notice" mailed on 26 May, 2004, is vacated to the extent that it states that Figures 19 & 20 appear to be omitted from the application.

In view of the above, the petition is granted. The petition fee of $130.00 is unnecessary and will be refunded to counsel's deposit account, No. 06-1050.

The application will be processed with the two (2) sheets of drawings containing Figures 19 & 20 supplied with the present petition, as a part of the original disclosure. The copies of the other sheets of drawings supplied with the present petition will not be processed or examined, but will be retained in the application file.

The application is being returned to Initial Patent Examination Division for further processing with a filing date of 27 February, 2004, using the application papers filed on that date, and the two (2) sheet of drawings containing Figures 19 & 20 supplied with the present petition, and an indication in Office records that 18 sheets of drawings were present on filing.

Telephone inquires should be directed to the undersigned at 703-308-6918.

Douglas I. Wood
Senior Petitions Attorney
Office of Petitions

UNITED STATES PATENT & TRADEMARK OFFICE
Washington, D.C. 20231

REQUEST FOR PATENT FEE REFUND

1 Date of Request: 9/7/04

2 Serial/Patent # 10789949

3 Please refund the following fee(s):		4 PAPER NUMBER	5 DATE FILED	6 AMOUNT
	Filing			$
	Amendment			$
	Extension of Time			$
	Notice of Appeal/Appeal			$
1460	Petition		6/16/04	$ 130
	Issue			$
	Cert of Correction/Terminal Disc.			$
	Maintenance			$
	Assignment			$
	Other			$

7 TOTAL AMOUNT OF REFUND $ 130

8 TO BE REFUNDED BY:

Treasury Check

Credit Deposit A/C #:

9 0 6 -- 1 0 5 0

10 REASON:

Overpayment

Duplicate Payment

✓ No Fee Due (Explanation):

PET DUE TO PTO error

11 REFUND REQUESTED BY:

TYPED/PRINTED NAME: D. WOOD TITLE: SR ATTY

SIGNATURE: DW PHONE: 3086918

OFFICE: OP

****

THIS SPACE RESERVED FOR FINANCE USE ONLY:

APPROVED: Alvin Kelly DATE: 9/7/04

Instructions for completion of this form appear on the back. After completion, attach white and yellow copies to the official file and mail or hand-carry to:

Office of Finance
Refund Branch
Crystal Park One, Room 802B

FORM PTO 1577
(01/90)

Repln. Ref: 9/7/2004 AKELLY 001[illegible]
DA#:061050 Date/Number:10789949
FC: 9204 $130.00 CR

SPE RESPONSE FOR CERTIFICATE OF CORRECTION

Paper No.: _____

DATE : 10-12-06

TO SPE OF : ART UNIT 3670

SUBJECT : Request for Certificate of Correction for Appl. No.: 10/789952 Patent No.: 7062803

Please respond to this request for a certificate of correction within 7 days.

Please review the requested changes/corrections as shown in the **COCIN** document(s) in the IFW application image. No new matter should be introduced, nor should the scope or meaning of the claims be changed.

Please check Drawings

Please complete the response (see below) and forward the completed response to scanning using document code **COCX**.

E Young

Certificates of Correction Branch

703-308-9390 ext. 117

Thank You For Your Assistance

The request for issuing the above-identified correction(s) is hereby:

Note your decision on the appropriate box.

- ☒ **Approved** — All changes apply.
- ☐ **Approved in Part** — Specify below which changes do not apply.
- ☐ **Denied** — State the reasons for denial below.

Comments: _____

_____

_____

_____

_____

Patricia L Engle — SPE

3673 — Art Unit

UNITED STATES PATENT AND TRADEMARK OFFICE

UNITED STATES DEPARTMENT OF COMMERCE
United States Patent and Trademark Office
Address: COMMISSIONER FOR PATENTS
P.O. Box 1450
Alexandria, Virginia 22313-1450
www.uspto.gov

APPLICATION NO.	FILING DATE	FIRST NAMED INVENTOR	ATTORNEY DOCKET NO.	CONFIRMATION NO.
10/789,956	02/26/2004	Mary J. Bossard	SHE0081.00	5777

21968 7590 02/13/2007

NEKTAR THERAPEUTICS
150 INDUSTRIAL ROAD
SAN CARLOS, CA 94070

EXAMINER	
MONDESI, ROBERT B	
ART UNIT	PAPER NUMBER
1652	

MAIL DATE	DELIVERY MODE
02/13/2007	PAPER

Please find below and/or attached an Office communication concerning this application or proceeding.

UNITED STATES PATENT AND TRADEMARK OFFICE

Commissioner for Patents
United States Patent and Trademark Office
P.O. Box 1450
Alexandria, VA 22313-1450
www.uspto.gov

In re Application of
Mary J. BOSSARD et al
Serial No. 10/789,956
Filed: February 26, 2004
Title: POLYMER-FACTOR VIII MOIETY CONJUGATES

Date: February 1, 2007

This is a decision on the petition to request a change in Inventorship under 37 C.F.R. § 1.48(a) filed November 21, 2006.

The petition has been reviewed and it is found to be in compliance with the requirements as set forth in MPEP §1481. Accordingly, the petition is granted.

The Inventorship in this application has been changed to list the following inventors:

Michael D. Bentley, Mary J. Bassard, and Ping Zhang.

Petition GRANTED.

Ponnathapura N. Achutamurthy
Supervisory Patent Examiner
Art Unit 1652

UNITED STATES PATENT AND TRADEMARK OFFICE

Commissioner for Patents
United States Patent and Trademark Office
P.O. Box 1450
Alexandria, VA 22313-1450
www.uspto.gov

BRIAN G. PRATT ESQ.
RADER RISHMAN & GRAUER PLLC
10653 N. RIVER FRONT PARKWAY, SUITE 150
SOUTH JORDAN, UT 74095

COPY MAILED

MAR 0 9 2006

OFFICE OF PETITIONS

In re Application of :
Stephen D. Newman :
Application No. 10/789,961 : DECISION GRANTING PETITION
Filed: February 27, 2004 : UNDER 37 CFR 1.55(c)
Attorney Docket No. 40302-0013 :

This is a decision on the petition under 37 CFR 1.55(c), filed October 17, 2005, for acceptance of an unintentionally delayed claim under 35 U.S.C. § 119(a)-(d) for benefit of the filing date of foreign Australian Application No. AU2001PR0007086, filed August 17, 2001.

A petition under 37 CFR 1.55(c) to accept an unintentionally delayed claim for priority requires:

(1) The nonprovisional application claiming the benefit of an earlier filing date must be filed on or after November 29, 2000;

(2) the claim submitted with the petition must identify the prior foreign application for which priority is claimed, as well as any foreign application for the same subject matter and having a filing date before that of the application for which priority is claimed, by the application number, country, and the filing date, and must be supplied on an application data sheet in accordance with 37 CFR 1.76 or on the oath or declaration

(3) the surcharge as set forth in 37 CFR 1.17(t);

(4) a statement that the entire delay between the date the claim was due under 37 CFR 1.55(a)(1) and the date the claim was filed was unintentional (the Director may require additional information where there is a question whether the delay was unintentional); and

(5) the above-identified nonprovisional application must be filed within 12 months of the filing date of the foreign application.

The instant pending nonprovisional application was filed after November 29, 2000, and did not include a reference to the foreign application, for which benefit is now sought, within the later of four months from the actual filing date of the application or sixteen months from the filing date of the prior foreign application. Therefore, since the claim for priority is submitted after the period

specified in 37 CFR 1.55(a)(1)(i), this is an appropriate petition under the provisions of 37 CFR 1.55(c).

The above-identified pending nonprovisional application was filed on February 27, 2004, which is after November 29, 2000. Further, intermediate international Application No. PCT/AU02/01105 was filed on August 7, 2002, which is within 12 months of the August 17, 2001filing date of the foreign application to which benefit is now being claimed. On July 30, 2004, an executed oath/declaration was received which identifies the foreign application for which priority is claimed by application number, country and filing date. The required petition fee of $1,370 was received with the petition. Lastly, petitioner has provided an adequate statement of unintentional delay.

All requirements being met, the petition under 37 CFR 1.55(c) to accept an unintentionally delayed claim for priority under 35 U.S.C. § 119(a)-(d) is **granted**.

The granting of the petition to accept the delayed benefit claim to the prior-filed foreign application under 37 CFR 1.55(c) should not be construed as meaning that this application is entitled to the benefit of the prior-filed foreign application. In order for this application to be entitled to the benefit of the prior-filed applications, all other requirements under 35 U.S.C. 119(a)-(d) and 37 CFR 1.55(c)(a)(2) must be met. Accordingly, the examiner will, in due course, consider this benefit claim and determine whether this application is entitled to the benefit of the earlier filing date.

It is noted that the revocation and power of attorney document submitted on January 6, 1006 lacks the required certification under 37 CFR 3.73(b). Accordingly, in order for the revocation and power of attorney to be proper, petitioner must comply with the provisions of 37 CFR 3.73(b). A form under 37 CFR 3.73(b) may be found on the USPTO Website to aid petitioner in complying with the provisions of 37 CFR 3.73(b).

This application is being forwarded to Technology Center AU 3728 for examination in due course and for consideration by the examiner of record of the foreign priority claim under 35 U.S.C. § 119(a)-(d).

Any inquiries directly pertaining to this matter may be directed to the undersigned at (571) 272-3218.

Frances Hicks
Petitions Examiner
Office of Petitions

UNITED STATES PATENT AND TRADEMARK OFFICE

UNITED STATES DEPARTMENT OF COMMERCE
United States Patent and Trademark Office
Address: COMMISSIONER FOR PATENTS
P.O. Box 1450
Alexandria, Virginia 22313-1450
www.uspto.gov

FLIESLER MEYER LLP
650 CALIFORNIA STREET
14TH FLOOR
SAN FRANCISCO, CA 94108

Mail Date: 04/20/2010

Applicant	: Daryl B. Olander	: DECISION ON REQUEST FOR
Patent Number	: 7650572	: RECALCULATION of PATENT
Issue Date	: 01/19/2010	: TERM ADJUSTMENT IN VIEW
Appliction No	: 10/789,970	: OF WYETH AND NOTICE OF INTENT TO
Filed	: 02/27/2004	: ISSUE CERTIFICATE OF CORRECTION
		:

The Request for Recalculation is **GRANTED** to the extent indicated.

The patent term adjustment has been determined to be **768** days. The USPTO will *sua sponte* issue a certificate of correction reflecting the amount of PTA days determined by the recalculation.

Prior to the issuance of the certificate of correction, the USPTO will afford patentee an opportunity to be heard and request reconsideration. Accordingly, patentee has **one month or thirty (30) days**, whichever is longer, to file a request for reconsideration of this patent term adjustment calculation. See 35 U.S.C. 154(b)(3)(B)(ii) and 37 CFR 1.322(a)(4). No extensions of time will be granted under 37 CFR 1.136.

Patentee should use document code PET.OP if electronically filing a request for reconsideration of this patent term adjustment calculation. The patentee must also include the information required by 37 CFR 1.705(b)(2) and the fee required by 37 CFR 1.18(e). If patentee does not file a timely request for reconsideration of this patent term adjustment calculation including the information required by 37 CFR 1.705(b)(2) and the fee required by 37 CFR 1.18(e), the USPTO will issue a certificate of correction reflecting the PTA determination noted above.

Patentee should be aware that in order to preserve the right to review in the United States District Court for the District of Columbia of the USPTO patent term adjustment determination, patentee must ensure that he or she also take the steps required under 35 U.S.C. 154(b)(4)(A) in a timely manner. Nothing in the request for recalculation should be construed as providing an alternative time frame for commencing a civil action under 35 U.S.C. 154(b)(4)(A).

Any questions concerning this decision should be directed to the Office of Patent Legal Administration at 571-272-7702.

UNITED STATES PATENT AND TRADEMARK OFFICE

COMMISSIONER FOR PATENTS
UNITED STATES PATENT AND TRADEMARK OFFICE
P.O. BOX 1450
ALEXANDRIA, VA 22313-1450
WWW.USPTO.GOV

Paper No. None

ASHKAN NAJAFI, P.A.
6817 SOUTHPOINT PARKWAY
SUITE 2301
JACKSONVILLE FL 32216

COPY MAILED

MAR 12 2007

OFFICE OF PETITIONS

In re Application of :
James Robert Macmillian :
Application No. 10/789,971 : DECISION ON PETITION
Filed: March 1, 2004 : UNDER 37 C.F.R. §1.181(A)
Attorney Docket No.: JRM200 :
Title: CONSTRUCTION SUPPORT :
ASSEMBLY :

This is a decision on the petition filed on November 30, 2006, pursuant to 37 C.F.R. §1.181(a), to withdraw the holding of abandonment.

The above-identified application became abandoned for failure to reply in a timely manner to the non-final Office action, mailed April 20, 2006, which set a shortened statutory period for reply of three months. No response was received, and no extensions of time under the provisions of 37 C.F.R. §1.136(a) were requested. Accordingly, the above-identified application became abandoned on July 21, 2006. A notice of abandonment was mailed on November 24, 2006.

With the present petition, Petitioner has included an amendment, remarks, a one-month extension of time, and a transmittal form that contains a certificate of mailing dated August 8, 2006.

It is noted that the electronic file contains an amendment, remarks, a one-month extension of time, and a transmittal form which contains a certificate of mailing dated August 8, 2006. Each of these items was received on August 8, 2006, and it is further noted that the fee associated with a petition for a one-month extension of time was received on August 8, 2006.

Considering the facts and circumstances of the delay at issue, as set forth on petition, it is concluded that Petitioner has met his burden of establishing that a response was timely submitted.

Accordingly, the petition under 37 C.F.R. §1.181(a) is **GRANTED**. The holding of abandonment is WITHDRAWN.

The Technology Center will be notified of this decision. The Technology Center's support staff will notify the Examiner of this decision, so that the amendment that was received on August 8, 2006 can be processed.

Telephone inquiries regarding *this decision* should be directed to the undersigned at (571) 272-3225. All other inquiries concerning examination procedures or status of the application should be directed to the Technology Center.

Paul Shanoski
Senior Attorney
Office of Petitions
United States Patent and Trademark Office

UNITED STATES PATENT AND TRADEMARK OFFICE

COMMISSIONER FOR PATENTS
UNITED STATES PATENT AND TRADEMARK OFFICE
P.O. BOX 1450
ALEXANDRIA, VA 22313-1450
www.uspto.gov

SANTANGELO LAW OFFICES, P.C.
125 SOUTH HOWES, THIRD FLOOR
FORT COLLINS CO 80521

COPY MAILED

JUN 06 2006

OFFICE OF PETITIONS

Applicant: Carlson
Appl. No.: 10/789,974
Filing Date: February 27, 2004
Title: METHODS OF EVALUATING UNDERSATURATED COALBED METHANE RESERVOIRS
Attorney Docket No.: Yates-CPD-US-NProv
Pub. No.: US 2005/0194133 A1
Pub. Date: September 8, 2005

This is a decision on the paper titled a "Request for Correction Of Patent Application Publication," received on October 24, 2005, for the above-identified application

The request is DISMISSED.

Applicant requests that the application be republished because the patent application publication contains a material error in paragraph [0052] of the specification wherein the mathematical formula "$bp = f^{-1}(R_{SW})$," is misprinted as "$bp = f^{1}(R_{SW})$,".

37 CFR 1.221(b) is applicable "only when the Office makes a material mistake which is apparent from Office records." A material mistake must affect the public's ability to appreciate the technical disclosure of the patent application publication, to determine the scope of the patent application publication, or to determine the scope of the provisional rights that an applicant may seek to enforce upon issuance of a patent. [1]

The instant request does not identify a material mistake in the publication made by the office under 37 CFR 1.221(b). The application was correctly published with the mathematical formula "$bp = f^{1}(R_{SW})$," as it appears on page 27, line 4 of the specification as filed.

If it is an Office error, it is due to the poor quality of the text in the formula, as the formula appears to be "$bp = f^{1}(R_{SW})$," without a negative sign before the one. Applicants have been advised to file applications having cleaner and larger text with sufficient clarity and contrast to permit reproduction, such as electronic reproduction by digital imaging and optical character recognition, which will avoid errors in the patent application publication process. See 37 CFR 1.52.

[1] Changes to Implement Eighteen-Month Publication of Patent Applications, 65 FR 57023, 57038 (Sept. 20, 2000), 1239, Off. Gaz. Pat. Office Notices 63, 75 (Oct. 10, 2000) (final rule).

The applicant is advised that a "request for republication of an application previously published" may be filed under 37 CFR 1.221 (a). Such a request for republication "must include a copy of the application compliance with the Office's electronic filing system requirements and be accompanied by the publication fee set forth in § 1.18 (d) and the processing fee set forth in § 1.17 (i)." If the request for republication does not comply with the electronic filing system requirements, the republication will not take place and the publication fee set forth in § 1.18 (d) will be refunded. The processing fee will be retained.

Any request for republication under 37 CFR 1.221(a), must be submitted via the EFS system and questions or request for reconsideration of the decision, should be addressed as follows:

By mail to: Mail Stop PGPUB
Commissioner for Patents
P.O. Box 1450
Alexandria, Va. 22313-1450

By facsimile: 571-273-8300

Inquiries relating to this matter may be directed to Mark Polutta at (571) 272-7709 (voice).

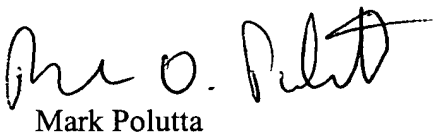

Mark Polutta
Senior Legal Advisor
Office of Patent Legal Administration
Office of the Deputy Commissioner
for Patent Examination Policy

UNITED STATES PATENT AND TRADEMARK OFFICE

Commissioner for Patents
United States Patent and Trademark Office
P.O. Box 1450
Alexandria, VA 22313-1450
www.uspto.gov

SANTANGELO LAW OFFICES, P.C.
125 SOUTH HOWES, THIRD FLOOR
FORT COLLINS CO 80521

COPY MAILED

OCT 0 2 2008

OFFICE OF PETITIONS

In re Application of :
Francis M. Carlson :
Application No. 10/789,974 : ON PETITION
Filed: February 28, 2004 :
Attorney Docket No. YATES-CDR-US-NPROV :

This is a decision on the petition, filed on May 14, 2007, requesting that the requirement of 37 CFR 1.97(i) be waived or suspended pursuant to 37 CFR 1.183 in order that the Information Disclosure Statement (IDS) filed concurrently with the instant petition and references cited therein be considered in the above-identified application.

The petition is **DISMISSED as MOOT**.

37 CFR 1.183 provides that in an extraordinary situation, when justice requires, any requirement of the regulations which is not a requirement of the statutes may be suspended or waived by the Commissioner. 37 CFR 1.97 states in the relevant portion that an IDS shall be considered by the Office if filed by the applicant after the period specified in 37 CFR 1.97(c), provided that the IDS is filed on or before payment of the issue fee and is accompanied by: (1) The statement specified in 37 CFR 1.97 (e); and (2) the fee set forth in § 1.17(p). In the instant application, the IDS in question was filed on May 14, 2007 while the issue fee was paid on March 1, 2007. As the IDS was filed after the payment of the issue fee, in accordance with 37 CFR 1.97(i), the IDS would have been placed in the file but would not have been considered by the Office. Applicant is seeking to have this requirement of 37 CFR 1.97(i) waived or suspended pursuant to 37 CFR 1.183.

Unfortunately, the instant petition was filed a day before the issue date of the application and the issuance of the patent has rendered the instant petition moot. It is noted that the applicant was apprised of the May 15, 2007 issue date in the Issue Notification mailed to the applicant on April 25, 2007.

Telephone inquiries regarding this communication should be directed to Ramesh Krishnamurthy at (571) 272-4914.

As authorized, a petition fee of $400 has been charged to the Credit Card.

David Bucci
Petitions Examiner
Office of Petitions

UNITED STATES PATENT AND TRADEMARK OFFICE

UNITED STATES DEPARTMENT OF COMMERCE
United States Patent and Trademark Office
Address: COMMISSIONER FOR PATENTS
P.O. Box 1450
Alexandria, Virginia 22313-1450
www.uspto.gov

APPLICATION NO.	FILING DATE	FIRST NAMED INVENTOR	ATTORNEY DOCKET NO.	CONFIRMATION NO.
10/789,978	03/02/2004	Jun Hirai	249565US6	9646

22850 7590 01/28/2008

OBLON, SPIVAK, MCCLELLAND MAIER & NEUSTADT, P.C.
1940 DUKE STREET
ALEXANDRIA, VA 22314

EXAMINER	
NGUYEN, HUY THANH	
ART UNIT	**PAPER NUMBER**
2621	

NOTIFICATION DATE	DELIVERY MODE
01/28/2008	ELECTRONIC

Please find below and/or attached an Office communication concerning this application or proceeding.

The time period for reply, if any, is set in the attached communication.

Notice of the Office communication was sent electronically on above-indicated "Notification Date" to the following e-mail address(es):

patentdocket@oblon.com
oblonpat@oblon.com
jgardner@oblon.com

UNITED STATES PATENT AND TRADEMARK OFFICE

UNITED STATES DEPARTMENT OF COMMERCE
United States Patent and Trademark Office
Address: COMMISSIONER FOR PATENTS
P.O. Box 1450
Alexandria, Virginia 22313-1450
www.uspto.gov

APPLICATION NO.	FILING DATE	FIRST NAMED INVENTOR	ATTORNEY DOCKET NO.	CONFIRMATION NO.
10/789,978	03/02/2004	Jun Hirai	249565US6	9646

7590 02/21/2008

OBLON, SPIVAK, MCCLELLAND MAIER & NEUSTADT, P.C.
1940 DUKE STREET
ALEXANDRIA, VA 22314

EXAMINER	
NGUYEN, HUY THANH	

ART UNIT	PAPER NUMBER
2621	

NOTIFICATION DATE	DELIVERY MODE
02/21/2008	ELECTRONIC

DECISION DISMISSING PETITION UNDER 37 CFR 1.138(d)

The declaration of express abandonment will not be recognized

This is in response to the petition under 37 CFR 1.138(d), requesting for a refund of any previously paid search fee and excess claims fee in the above-identified application.

The petition is dismissed.

The express abandonment will **not** be recognized for the reason(s) indicated below:

1. ☐ The petition was not filed in sufficient time to permit the appropriate officials to recognize the abandonment before an examination has been made of the application. See 37 CFR 1.138(d).

2. ☐ The petition was not signed by a party authorized by 37 CFR 1.33(b)(1), (3) or (4).

3. ☐ The application is not an application filed under 35 U.S.C. 111(a) on or after December 8, 2004.

4. ☒ The petition for express abandonment under 1.138(d) is dismissed because the applicant did not pay any search fee and excess claims fees in the above-identified application.

Telephone inquiries should be directed to the Office of Data Management at (571) 272-4200.

Patent Publication Branch
Office of Data Management

COMMISSIONER FOR PATENTS
UNITED STATES PATENT AND TRADEMARK OFFICE
P.O. BOX 1450
ALEXANDRIA, VA 22313-1450
www.uspto.gov

JUN - 3 2004

PRESTON GATES ELLIS & ROUVELAS MEEDS LLP
1735 NEW YORK AVENUE, NW, SUITE 500
WASHINGTON DC 20006

In re Application of	:
John A. Giordano et al	:
Serial No.: 10/790,027	: PETITION TO MAKE SPECIAL
Filed: March 2, 2004	:
Attorney Docket No.: 48508-00014	:

This is in response to applicants' petition filed March 22, 2004, to make the above-identified application special under the provisions of 37 CFR 1.102(d) based on infringement.

Applicant has satisfied the provisions set forth in M.P.E.P. 708.02, II, relating to actual or potential infringement. Therefor the petition is **GRANTED**.

The application will be forwarded to the examiner for action on the merits commensurate with this decision.

Should there be any questions with regard to this letter please contact William R. Dixon, Jr. by letter addressed to the Director, Technology Center 1600, P.O. Box 1450, Alexandria, VA 22313-1450, or by telephone at 571-272-0519 or by facsimile transmission to the Office general facsimile number 703-872-9306.

William R. Dixon, Jr.
Special Program Examiner
Technology Center 1600

UNITED STATES PATENT AND TRADEMARK OFFICE

MAR 24 2006

Commissioner for Patents
United States Patent and Trademark Office
P.O. Box 1450
Alexandria, VA 22313-1450

JOOD ~~MAR 15 2006~~

PRESTON GATES ELLIS & ROUVELAS MEEDS, LLP
1735 NEW YORK AVENUE, NW, SUITE 500
WASHINGTON, DC 20006

In re Application of	:	
John A. Giordano et al	:	
Serial No.: 10/790,027	:	DECISION ON PETITION
Filed: March 2, 2004	:	
Attorney Docket No.: 48508-00014	:	

This letter is in response to the Petition under 37 C.F.R. 1.181 requesting withdrawal of an Office imposed suspension mailed November 3, 2005.

> 37 CFR 1.103(e) provides that the Office will notify applicant if the Office suspends action in an application on its own initiative. Every suspension of action initiated by the Office will be limited to a time period of a maximum of 6 months. An examiner may grant an initial suspension of Office action on his or her own initiative, as in MPEP § 709.01 and MPEP Chapter 2300, for a maximum period of 6 months. A notification of suspension must be mailed to the applicant for each Office-initiated suspension of action, even for second or subsequent suspensions, and must include a suspension period (a maximum of 6 months).

On November 3, 2005, the examiner determined that the claims of the above identified application met the conditions for patentability under 35 U.S.C. 101, 102, 103 and 112. However, upon conducting an interference search of other pending applications, it was discovered that another unrelated application appeared to contain claims of overlapping scope to those deemed allowable. The other application also appeared to have an earlier effective filing date. On this basis the examiner was advised to suspend action in this application until prosecution I the other application could advance or be concluded.

Upon receipt of applicants' petition a further review was undertaken of the scope of claims in the two applications and the priority date claimed. Based on this review it has been decided to remove the suspense status and resume prosecution.

The petition is **GRANTED.** The suspension is withdrawn.

The application will be returned to the examiner for prompt action on the application.

Should there be any questions regarding this decision, please contact Special Program Examiner, William R. Dixon, Jr. by letter addressed to Director, TC 1600, at the address listed above, or by telephone at 571-272-0519 or by facsimile sent to the general Office facsimile number, 571-273-8300.

Bruce M. Kisliuk
Director, Technology Center 1600

UNITED STATES PATENT AND TRADEMARK OFFICE

Commissioner for Patents
United States Patent and Trademark Office
P.O. Box 1450
Alexandria, VA 22313-1450
www.uspto.gov

PAUL J. SUTTON, ESQ., BARRY G. MAGIDOFF, ESQ.
GREENBERG TRAURIG, LLP
200 PARK AVENUE
NEW YORK NY 10166

COPY MAILED

AUG 2 2 2007

OFFICE OF PETITIONS

In re Application of	:	
Wilson-MacDonald et al.	:	
Application No. 10/790,033	:	ON PETITION
Filed: March 2, 2004	:	
Attorney Docket No. 1011-001-10316	:	

This is a decision on the petition under 37 C.F.R. § 1.137(b), filed August 13, 2007, to revive the above-identified application.

The petition is **GRANTED.**

The petition satisfies the conditions for revival pursuant to the provisions of 37 CFR 1.137(b) in that (1) the reply in the form of an Amendment; (2) the petition fee; and (3) the required statement of unintentional delay have been received. Accordingly, the response has been accepted as having been unintentionally delayed.

This matter is being referred to Technology Center 3700 for further examination on the merits.

Telephone inquiries regarding this decision should be directed to the undersigned at (571) 272-3206.

Liana Walsh
Petitions Examiner
Office of Petitions

UNITED STATES PATENT AND TRADEMARK OFFICE

Commissioner for Patents
United States Patent and Trademark Office
P. O. Box 1450
Alexandria, VA 22313-1450
www.uspto.gov

SUTHERLAND ASBILL & BRENNAN LLP
999 PEACHTREE STREET, N.E.
ATLANTA, GA 30309

COPY MAILED

OCT 11 2007

OFFICE OF PETITIONS

In re Patent No. 7,145,073 :
Issue Date: December 5, 2006 :
Application No. 10/790,055 : ON PETITION
Filed: March 2, 2004 :
Attorney Docket No. 77335-0098 :

This is a decision on the petition filed June 14, 2007, which is being treated as a petition under 37 CFR 3.81(b)[1] to correct assignee's names on the front page of the above-identified patent by way of a Certificate of Correction.

The petition is **granted.**

Telephone inquiries concerning this matter may be directed to the undersigned at (571) 272-3210. Any questions concerning the issuance of the Certificate of Correction should be directed to the Certificates of Correction Branch at (703) 305-8309.

This application is being forwarded to the Certificates of Correction Branch for issuance of the requested Certificate of Correction.

Irvin Dingle
Petitions Examiner
Office of Petitions

[1] See Official Gazette of June 22, 2004

UNITED STATES PATENT AND TRADEMARK OFFICE

Commissioner for Patents
United States Patent and Trademark Office
P.O. Box 1450
Alexandria, VA 22313-1450
www.uspto.gov

BIRCH STEWART KOLASCH & BIRCH
PO BOX 747
FALLS CHURCH VA 22040-0747

COPY MAILED

JAN 23 2008

OFFICE OF PETITIONS

In re Application of	:	
Lin et al.	:	
Application No. 10/790069	:	DECISION
Filing or 371(c) Date: 03/02/2004	:	ON PETITION
Patent No.: 7253278	:	
Issue Date: 08/07/2007	:	
Attorney Docket No.: 2410-0184P	:	

This is a decision on the "Petition Under 37 C.F.R. § 1.183 to Change Assignee's Name," filed November 16, 2007, to correct the name of the assignee on the front page of the above-identified patent by way of a Certificate of Correction. The petition is is properly treated as a petition under 37 CFR 3.81(b)[1].

The Petition is **granted**.

The petition was accompanied by a certificate of correction as required by 3.81(b), and the fee submitted with the present petition. Further, Office assignment records reflect that CPC Corporation, is an assignee of record. As the request complies with the provisions of 37 CFR 3.81(b), it would be appropriate for a certificate of correction to be processed.

Telephone inquiries concerning this matter should be directed to the undersigned at (571) 272-3232. Any questions concerning the issuance of the Certificate of Correction should be directed to the Certificate of Correction Branch at (571) 272-4200.

This matter is being referred to the Certificates of Correction Branch for processing of a certificate of correction after issuance of this application into a patent.

Derek L. Woods
Attorney
Office of Petitions

[1] *See* MPEP 1309, subsection II; and Official Gazette of June 22, 2004.

UNITED STATES PATENT AND TRADEMARK OFFICE

Commissioner for Patents
United States Patent and Trademark Office
P.O. Box 1450
Alexandria, VA 22313-1450
www.uspto.gov

MAIL

AUG 3 1 2006

DIRECTOR OFFICE
TECHNOLOGY CENTER 2600

BIRCH STEWART KOLASCH & BIRCH
P.O. BOX 747
FALLS CHURCH, VA 22040-0747

In re Application of
Wang, Fu-Sheng
Serial No.: 10/790,132
Filed: MARCH 2, 2004
For: METHOD OF DIGITAL CREATION OF A MULTIVISION FILTER EFFECT

DECISION ON PETITION
ACCEPTANCE OF COLOR DRAWINGS

This is a decision on the petition pursuant to 37 C.F.R. § 1.84(a)(2), filed March 2, 2004, requesting acceptance of color drawings.

The petition requests that the color drawings/photographs, noted as Figures 3, 4, and 7-19 be accepted in lieu of black and white drawings.

A grantable petition under 37 C.F.R. §1.84(a)(2) must be accompanied by a fee set forth under 37 C.F.R. § 1.17(h), 3 (three) set of the color drawings in question, and the specification must contain, or be amended to contain, the following language as the first paragraph in that portion of the specification relating to the brief description of the drawings:

"The file of this patent contains at least one drawing executed in color. Copies of this patent with color drawing(s) will be provided by the Patent and Trademark Office upon request and payment of the necessary fee."

The replacement set of color drawings have been approved for entry by the examiner.

The petition was filed without 3 (three) complete sets of color drawings of figures 1-19 and a black and white photocopy of the drawings. Submitted with the Petition were only one set of colored drawings for figures 3, 4 and 7-19 and no black and white copy of figures 1-19.

Therefore, the file record reveals that applicant has not provided three sets of color drawings, filed simultaneously with the subject petition. Petitioner asserts payment was provided at time of filing.

Petitioner has not satisfied the requirements of 37 C.F.R. §1.84(a)(2). Accordingly, the petition is **DISMISSED.**

Petitioner may submit a request for reconsideration within **TWO MONTHS** of the date of this decision. Any request for reconsideration should be complete, i.e., include three (3) complete sets of color drawings/color photographs (incorporating the replacement figures).

Any questions should be directed to the undersigned.

Krista M. Zele
Special Program Examiner
Technology Center 2600
Communications

UNITED STATES PATENT AND TRADEMARK OFFICE

COMMISSIONER FOR PATENTS
UNITED STATES PATENT AND TRADEMARK OFFICE
WASHINGTON, DC 20231
www.uspto.gov

MAIL

APR 05 2007

DIRECTOR'S OFFICE
TECHNOLOGY CENTER 2600

BIRCH, STEWART, KOLASCH & BIRCH, LLP
PO BOX 747
FALLS CHURCH, VA 22040-0747

In re Application of
Wang, Fu-Sheng
Serial No.: 10/790,132
Filed: March 3, 2004
For: **METHOD OF DIGITAL CREATION OF A MULTIVISION FILTER**

DECISION ON PETITION
ACCEPTANCE OF COLOR DRAWINGS

This is a decision on the petition under 37 CFR §1.184(a)(2), filed October 24, 2006, requesting acceptance of color drawings.

The petition requests that the color drawings identified in Figures 1, 3 through 19, be accepted in lieu of black and white drawings.

A grantable petition under 37 C.F.R. §1.84(a)(2) must be accompanied by a fee set forth under 37 C.F.R. § 1.17(h), 3 (three) sets of the color drawings in question, and the specification must contain, or be amended to contain, the following language as the first paragraph in that portion of the specification relating to the brief description of the drawings:

"The file of this patent contains at least one drawing executed in color. Copies of this patent with color drawing(s) will be provided by the Patent and Trademark Office upon request and payment of the necessary fee."

The petition is GRANTED.

Dwayne Bost
Special Program Examiner
Technology Center 2600
Communications

UNITED STATES PATENT AND TRADEMARK OFFICE

COMMISSIONER FOR PATENTS
UNITED STATES PATENT AND TRADEMARK OFFICE
P.O. BOX 1450
ALEXANDRIA, VA 22313-1450
www.uspto.gov

MAIL

MAY 16 2005

DIRECTOR OFFICE
TECHNOLOGY CENTER 2100

MATTINGLY, STANGER, MALUR & BRUNDIDGE, P.C.
1800 DIAGONAL ROAD
SUITE 370
ALEXANDRIA VA 22314

In re Application of: Suzuki, et al.
Application No. 10/790,140
Filed: March 2, 2004
For: DISK ARRAY DEVICE AND METHOD OF CHANGING THE CONFIGURATION OF THE DISK ARRAY DEVICE

DECISION ON PETITION
TO MAKE SPECIAL
(ACCELERATED EXAMINATION)
UNDER M.P.E.P. §708.02 (VIII)

This is a response to the petition filed 22 April 2005, under 37 C.F.R. §1.102(d) and M.P.E.P. §708.02 (VIII): Accelerated Examination, to make the above-identified application special.

The Petition is **GRANTED**.

M.P.E.P. §708.02, Section VIII which sets out the prerequisites for a grantable petition for Accelerated Examination under 37 C.F.R. §1.102(d) states in relevant part:

A new application (one which has not received any examination by the examiner) may be granted special status provided that applicant (and this term includes applicant's attorney or agent) complies with each of the following items:

(a) Submits a petition to make special accompanied by the fee set forth in **37 CFR 1.17(h)**;

(b) Presents all claims directed to a single invention, or if the Office determines that all the claims presented are not obviously directed to a single invention, will make an election without traverse as a prerequisite to the grant of special status;

(c) Submits a statement(s) that a pre-examination search was made, listing the field of search by class and subclass, publication, Chemical Abstracts, foreign patents, etc. The pre-examination search must be directed to the invention as claimed in the application for which special status is requested. A search made by a foreign patent office satisfies this requirement;

(d) Submits one copy each of the references deemed most closely related to the subject matter encompassed by the claims if said references are not already of record; and

(e) Submits a detailed discussion of the references, which discussion points out, with the particularity required by 37 CFR 1.111 (b) and (c), how the claimed subject matter is patentable over the references.

In those instances where the request for this special status does not meet all the prerequisites set forth above, **applicant will be notified and the defects in the request will be stated.** The application will remain in the status of a new application awaiting action in its regular turn. In those instances where a request is defective in one or more respects, applicant will be given one opportunity to perfect the request in a renewed petition to make special. If perfected, the request will then be granted. If not perfected in the first renewed petition, any additional renewed petitions to make special may or may not be considered at the discretion of the Technology Center (TC) Special Program Examiner.

Applicants' submission meets all the criteria set out above. Accordingly, the petition is **GRANTED**.

The application file is being forwarded to the Examiner of Record for accelerated examination according to the procedures set forth in MPEP § 708.02, Section VIII.

Pinchus M. Laufer
Special Program Examiner
Technology Center 2100
Computer Architecture, Software and Information Security
571-272-3599

ds

UNITED STATES PATENT AND TRADEMARK OFFICE

Commissioner for Patents
United States Patent and Trademark Office
P.O. Box 1450
Alexandria, VA 22313-1450
www.uspto.gov

BINGHAM MCCUTCHEN LLP
2020 K Street, N.W.
Intellectual Property Department
WASHINGTON DC 20006

COPY MAILED

JUN 19 2008

OFFICE OF PETITIONS

In re Application of :
Chong, et al. :
Application No. 10/790,146 : DECISION
Filed: 2 March, 2004 :
Attorney Docket No. 19111.0143 :

This is a decision on the petition, filed on 25 February, 2008, considered as a petition under 37 C.F.R. §1.181 (no fee) requesting withdrawal of the holding of abandonment in the above-identified application.

The petition as considered under 37 C.F.R. §1.181 is **GRANTED**.

As to the Request to Withdraw
the Holding of Abandonment

A proper showing as to non-receipt requires at the very minimum: a statement from practitioner stating that the Office action was not received by the practitioner; a statement from the practitioner attesting to the fact that a search of the file jacket and docket records for the application indicates that the Office action was not received with a copy of those docket records; and a brief statement of the calendaring process and a copy of the due-date (calendar) docket record(s) where the nonreceived Office action would have been scheduled for reply had it been received must be attached to and referenced in the practitioner's statement.

Alternatively, for a showing of timely and proper reply: a statement from practitioner stating that the reply was timely submitted by the practitioner; and copies of all papers submitted as and/or in support of that reply, with/and a copy of the date-stamped receipt card, Office FAX receipt

acknowledgement (not simply Petitioner's FAX transmittal), or EFS receipt acknowledgment from the Office, along with practitioner's attestation as to the correctness/completeness of his/her records.

The showing(s) must include that of the person(s) with first-hand knowledge and an acknowledgment by the Petitioner that he/she has reviewed that information in compliance with his/her duty of candor to the Office.

BACKGROUND

The record reflects as follows:

This application was held abandoned for Petitioner's failure to reply timely and properly to a final Office action mailed on 6 September, 2007, with reply due absent extension of time on or before 6 December, 2007.

The application went abandoned after midnight 6 December, 2007.

The Office mailed the Notice of Abandonment on 5 February, 2008.

On 25 February, 2008, Petitioner filed the instant petition with, *inter alia*, a request and fee for extension of time, a request for continued examination (RCE) and fee and an amendment as a submission under37 C.F.R. §1.114, and averred that, in essence, the mailing of the Notice of Abandonment had been precipitous and before the expiration of the maximum statutory period for reply.

Petitioner's point is well taken.

The guidance in the Commentary at MPEP §711.03(c) sets forth the showing requirements for overcoming the presumptions herein.[1]

---

[1] The guidance in the Commentary at MPEP §711.03(c) as to non-received Office actions and timely filed replies is as follows:

A. Petition To Withdraw Holding of Abandonment Based on Failure To Receive Office Action

In *Delgar v. Schulyer*, 172 USPQ 513 (D.D.C. 1971), the court decided that the Office should mail a new Notice of Allowance in view of the evidence presented in support of the contention that the applicant's representative did not receive the original Notice of Allowance. Under the reasoning of *Delgar*, an allegation that an Office action was never received may be considered in a petition to withdraw the holding of abandonment. If adequately supported, the Office may grant the petition to withdraw the holding of abandonment and remail the Office action. That is, the reasoning of *Delgar* is applicable regardless of whether an application is held abandoned for failure to timely pay the issue fee (35 U.S.C. 151) or for failure to prosecute (35 U.S.C. 133).

To minimize costs and burdens to practitioners and the Office, the Office has modified the showing required to establish nonreceipt of an Office action. The showing required to establish nonreceipt of an Office communication must include a statement from the practitioner **>describing the system used for recording an Office action received at the correspondence address of record with the USPTO. The statement should establish that the docketing system is sufficiently reliable. It is expected that the record would include, but not be limited to, the application number, attorney docket number, the mail date of the Office action and the due date for the response.

Practitioner must state that the Office action was not received at the correspondence address of record, and that a search of the practitioner's record(s), including any file jacket or the equivalent, and the application contents, indicates that the Office action was not received. A copy of the record(s) used by the practitioner where the non-received Office action would have been entered had it been received is required.

(*See* MPEP § 711.03(c) under subheading "Petition to Withdraw Holding of Abandonment Based on Failure to Receive Office Action," alternatively "A Reply Was Timely Filed"; see also: "Withdrawing the Holding of Abandonment When Office Actions Are Not Received," 1156 Official Gazette 53 (November 16, 1993).)

Out of an abundance of caution, Petitioners always are reminded that the filing of a petition under 37 C.F.R. §1.181 does not toll any periods that may be running any action by the Office and a petition seeking relief under the regulation must be filed within two (2) months of the act complained of (see: 37 C.F.R. §1.181(f)), and that those registered to practice and all others who make representations before the Office are reminded to inquire into the underlying facts of

---

A copy of the practitioner's record(s) required to show non-receipt of the Office action should include the master docket for the firm. That is, if a three month period for reply was set in the nonreceived Office action, a copy of the master docket report showing all replies docketed for a date three months from the mail date of the nonreceived Office action must be submitted as documentary proof of nonreceipt of the Office action. If no such master docket exists, the practitioner should so state and provide other evidence such as, but not limited to, the following: the application file jacket; incoming mail log; calendar; reminder system; or the individual docket record for the application in question.<

The showing outlined above may not be sufficient if there are circumstances that point to a conclusion that the Office action may have been lost after receipt rather than a conclusion that the Office action was lost in the mail (e.g., if the practitioner has a history of not receiving Office actions).

Evidence of nonreceipt of an Office communication or action (e.g., Notice of Abandonment or an advisory action) other than that action to which reply was required to avoid abandonment would not warrant withdrawal of the holding of abandonment. Abandonment takes place by operation of law for failure to reply to an Office action or timely pay the issue fee, not by operation of the mailing of a Notice of Abandonment. See *Lorenz v. Finkl*, 333 F.2d 885, 889-90, 142 USPQ 26, 29-30 (CCPA 1964); *Krahn v. Commissioner*, 15 USPQ2d 1823, 1824 (E.D. Va 1990); *In re Application of Fischer*, 6 USPQ2d 1573, 1574 (Comm'r Pat. 1988).

B. Petition To Withdraw Holding of Abandonment Based on Evidence That a Reply Was Timely Mailed or Filed

37 CFR 1.10(c) through 1.10(e) and 1.10(g) set forth procedures for petitioning the Director of the USPTO to accord a filing date to correspondence as of the date of deposit of the correspondence as "Express Mail." A petition to withdraw the holding of abandonment relying upon a timely reply placed in "Express Mail" must include an appropriate petition under 37 CFR 1.10(c), (d), (e), or (g) (see MPEP § 513). When a paper is shown to have been mailed to the Office using the "Express Mail" procedures, the paper must be entered in PALM with the "Express Mail" date.

Similarly, applicants may establish that a reply was filed with a postcard receipt that properly identifies the reply and provides *prima facie* evidence that the reply was timely filed. See MPEP § 503. For example, if the application has been held abandoned for failure to file a reply to a first Office action, and applicant has a postcard receipt showing that an amendment was timely filed in response to the Office action, then the holding of abandonment should be withdrawn upon the filing of a petition to withdraw the holding of abandonment. When the reply is shown to have been timely filed based on a postcard receipt, the reply must be entered into PALM using the date of receipt of the reply as shown on the post card receipt.

Where a certificate of mailing under 37 CFR 1.8, but not a postcard receipt, is relied upon in a petition to withdraw the holding of abandonment, see 37 CFR 1.8(b) and MPEP § 512. As stated in 37 CFR 1.8(b)(3) the statement that attests to the previous timely mailing or transmission of the correspondence must be on a personal knowledge basis, or to the satisfaction of the Director of the USPTO. If the statement attesting to the previous timely mailing is not made by the person who signed the Certificate of Mailing (i.e., there is no personal knowledge basis), then the statement attesting to the previous timely mailing should include evidence that supports the conclusion that the correspondence was actually mailed (e.g., copies of a mailing log establishing that correspondence was mailed for that application). When the correspondence is 2 shown to have been timely filed based on a certificate of mailing, the correspondence is entered into PALM with the actual date of receipt (i.e., the date that the duplicate copy of the papers was filed with the statement under 37 CFR 1.8).

37 CFR 1.8(b) also permits applicant to notify the Office of a previous mailing or transmission of correspondence and submit a statement under 37 CFR 1.8(b)(3) accompanied by a duplicate copy of the correspondence when a reasonable amount of time (e.g., more than one month) has elapsed from the time of mailing or transmitting of the correspondence. Applicant does not have to wait until the application becomes abandoned before notifying the Office of the previous mailing or transmission of the correspondence. Applicant should check the private Patent Application Information Retrieval (PAIR) system for the status of the correspondence before notifying the Office. See MPEP § 512.

C. Treatment of Untimely Petition To Withdraw Holding of Abandonment

37 CFR 1.181(f) provides that, *inter alia*, except as otherwise provided, any petition not filed within 2 months from the action complained of may be dismissed as untimely. Therefore, any petition (under 37 CFR 1.181) to withdraw the holding of abandonment not filed within 2 months of the mail date of a notice of abandonment (the action complained of) may be dismissed as untimely. 37 CFR 1.181(f).

Rather than dismiss an untimely petition to withdraw the holding of abandonment under 37 CFR 1.181(f), the Office may require a terminal disclaimer as a condition of granting an untimely petition to withdraw the holding of abandonment.

representations made to the Office and support averments with the appropriate documentation– since all owe to the Office the continuing duty to disclose.[2]

The availability of applications and application papers online to applicants/practitioners who diligently associate their Customer Number with the respective application(s) now provides an applicant/practitioner on-demand information as to events/transactions in an application.

Allegations as to the Request to
Withdraw the Holding of Abandonment

The courts have determined the construct for properly supporting a petition seeking withdrawal of a holding of abandonment.[3] (See, also, the commentary at MPEP §711.03(c)(I)(A) and (B).)

And the regulation requires that relief be sought within two (2) months of the act complained of.

Petitioner appears to have satisfied the showing requirements as discussed hereinabove.

CONCLUSION

The petition under 37 C.F.R. §1.181 is **granted**, and the 5 February, 2008, Notice of Abandonment is **vacated**.

The instant application is released to Technology Center/AU 2165 for further processing in due course.

Petitioner may find it beneficial to view Private PAIR within a fortnight of the instant decision to ensure that the revival has been acknowledged by the Technology Center/AU in response to this decision—and it is noted that all inquiries with regard to that change in status should be directed to the Technology Center/AU where that change of status must be effected.

---

[2] See supplement of 17 June, 1999. The Patent and Trademark Office is relying on Petitioner's duty of candor and good faith and accepting a statement made by Petitioner. See Changes to Patent Practice and Procedure, 62 Fed. Reg. at 53160 and 53178, 1203 Off. Gaz. Pat. Office at 88 and 103 (responses to comments 64 and 109)(applicant obligated under 37 C.F.R. §10.18 to inquire into the underlying facts and circumstances when providing statements to the Patent and Trademark Office).

[3] See: Delgar v. Schulyer, 172 USPQ 513 (D.D.C. 1971).

While telephone inquiries regarding this decision may be directed to the undersigned at (571) 272-3214, it is noted that all practice before the Office is in writing (see: 37 C.F.R. §1.2[4]) and the proper authority for action on any matter in this regard are the statutes (35 U.S.C.), regulations (37 C.F.R.) and the commentary on policy (MPEP). Therefore, no telephone discussion may be controlling or considered authority for Petitioner's action(s).

John J. Gillon, Jr.
Senior Attorney
Office of Petitions

[4] The regulations at 37 C.F.R. §1.2 provide:

§1.2 Business to be transacted in writing.

All business with the Patent and Trademark Office should be transacted in writing. The personal attendance of applicants or their attorneys or agents at the Patent and Trademark Office is unnecessary. The action of the Patent and Trademark Office will be based exclusively on the written record in the Office. No attention will be paid to any alleged oral promise, stipulation, or understanding in relation to which there is disagreement or doubt.

UNITED STATES PATENT AND TRADEMARK OFFICE

COMMISSIONER FOR PATENTS
UNITED STATES PATENT AND TRADEMARK OFFICE
P.O. BOX 1450
ALEXANDRIA, VA 22313-1450
www.uspto.gov

REED SMITH LLP
3110 FAIRVIEW PARK DRIVE, SUITE 1400
FALLS CHURCH, VA 22042

MAILED

DEC 27 2005

Technology Center 2100

In re Application of WATANABE	:	
Application No.: 10/790,175	:	DECISION ON PETITION
Filing Date: March 2, 2004	:	FOR ACCELERATED
For: METHOD AND APPARATUS OF	:	EXAMINATION UNDER
REMOTE COPY FOR MULTIPLE	:	M.P.E.P. §708.02(VIII)
STORAGE SUBSYSTEMS	:	

This is a decision on the petition filed December 2, 2005 under 37 CFR §1.102(d) and M.P.E.P. §708.02(VIII): Accelerated Examination, to make the above-identified application special.

The petition is **GRANTED**.

M.P.E.P. §708.02, Section VIII, which sets out the prerequisites for a grantable petition for Accelerated Examination under 37 CFR §1.102(d), states in relevant part:

> A new application (one which has not received any examination by the examiner) may be granted special status provided that applicant (and this term includes applicant's attorney or agent) complies with each of the following items:
>
> (A) Submits a petition to make special accompanied by the fee set forth in 37 CFR 1.17(h);
>
> (B) Presents all claims directed to a single invention, or if the Office determines that all the claims presented are not obviously directed to a single invention, will make an election without traverse as a prerequisite to the grant of special status. The election may be made by applicant at the time of filing the petition for special status. Should applicant fail to include an election with the original papers or petition and the Office determines that a requirement should be made, the established telephone restriction practice will be followed. If otherwise proper, examination on the merits will proceed on claims drawn to the elected invention. If applicant refuses to make an election without traverse, the application will not be further examined at that time. The petition will be denied on the ground that the claims are not directed to a single invention, and the application will await action in its regular turn. Divisional applications directed to the nonelected inventions will not automatically be given special status based on papers filed with the petition in the parent application. Each such application must meet on its own all requirements for the new special status;
>
> (C) Submits a statement(s) that a pre-examination search was made, listing the field of search by class and subclass, publication, Chemical Abstracts, foreign patents, etc. >The pre-examination

search must be directed to the invention as claimed in the application for which special status is requested.< A search made by a foreign patent office satisfies this requirement >if the claims in the corresponding foreign application are of the same or similar scope to the claims in the U.S. application for which special status is requested<;

(D) Submits one copy each of the references deemed most closely related to the subject matter encompassed by the claims if said references are not already of record; and

(E) Submits a detailed discussion of the references, which discussion points out, with the particularity required by 37 CFR 1.111 (b) and (c), how the claimed subject matter is patentable over the references.

Because the petition filed December 2, 2005 meets the criteria set forth above, the petition to make special is **GRANTED**.

It is noted that although the cover letter of the petition is signed, the substantive part of the petition is unsigned. The Office has construed the signature on the cover letter as being applicable to the petition as a whole. However, if the signatory is not the person making the statements contained within the petition, applicant must notify the Office accordingly, and the application's special status will be rescinded.

The application file is being forwarded to the Examiner for accelerated examination in accordance with M.P.E.P. §708.02, Section VIII. If the application is subsequently allowed, it will be given priority for printing. See M.P.E.P. §1309.

Pinchus M. Laufer
Special Programs Examiner
Technology Center 2100
Computer Architecture, Software, and Information Security
571-272-3599

UNITED STATES PATENT AND TRADEMARK OFFICE

Commissioner for Patents
United States Patent and Trademark Office
P.O. Box 1450
Alexandria, VA 22313-1450
www.uspto.gov

August 2005

DICKSTEIN SHAPIRO MORIN & OSHINSKY LLP
2101 L STREET NW
WASHINGTON, DC 20037-1526

SEP 01 2005

In re Application of:
KUNIO MORIYAMA ET AL.
Serial No.: 10/790,178
Filed: 03 March 2004
Docket: K2020.0005/P004
Title: PARTICLE BEAM THERAPY SYSTEM

DECISION ON PETITION TO MAKE SPECIAL UNDER 37 C.F.R. § 1.102(d)

This is a decision on the petition filed on July 18, 2005, to make the above-identified application special under the accelerated examination procedure set forth in MPEP § 708.02(X) in accordance with 37 C.F.R. § 1.102(d).

The petition to make the application special is **GRANTED**.

In support of the petition, petition provides: a) the applicable petition fee; and b) a statement explaining how the invention contributes to the treatment of cancer.

For accelerated examination under MPEP § 708.02(X) in accordance with 37 C.F.R. § 1.102(d), a petition with the following showing is required: a) the applicable petition fee; and b) a statement explaining how the invention contributes to the treatment, prevention, or diagnosis of cancer.

The requirements of MPEP § 708.02(X) are considered to have been met. The application will be advanced out of turn for examination, and will continue to be treated as special throughout the entire prosecution in the Office according to the procedure set forth in MPEP § 708.02.

The application file is being forwarded to the examiner for expedited prosecution.

If the examiner finds any interfering application for the same subject matter, he/she should consider such application simultaneously with this application and should state in the official letter of such application that he/she is taking it out of its turn because of possible interference.

Should an appeal be taken in this application or should this application becomes involved in an interference, consideration of the appeal and the interference will be expedited by all Patent and Trademark Office officials concerned, contingent likewise upon diligent prosecution by the applicant.

After allowance, this application will be given priority for printing. See M.P.E.P. § 1309.

Any inquiry regarding this decision should be directed to Hien H. Phan, Special Program Examiner, at (571) 272-1606.

Hien H. Phan, Special Program Examiner
Technology Center 2800 - Semiconductors,
Electrical & Optical Systems & Components

UNITED STATES PATENT AND TRADEMARK OFFICE

Commissioner for Patents
United States Patent and Trademark Office
P.O. Box 1450
Alexandria, VA 22313-1450
www.uspto.gov

KANESAKA BERNER AND PARTNERS PATENT AGENTS, LLP
SUITE 310
1700 DIAGONAL ROAD
ALEXANDRIA VA 22314

COPY MAILED

FEB 0 8 2007

OFFICE OF PETITIONS

In re Application of :
Minoru Hiragaki :
Application No. 10/790,193 : ON PETITION
Filed: March 2, 2004 :
Attorney Docket No. K-2153 :

This is a decision on the petition, filed September 18, 2006, under 37 CFR 1.181. This is also a decision on the request filed September 26, 2006 to withdraw the petition filed September 18, 2006.

The petition under 37 CFR 1.181 is **dismissed** as moot in view of the request filed September 26, 2006 to withdraw the above petition.

The application remains abandoned.

Telephone inquiries should be directed to the undersigned at (571) 272-3208.

Karen Creasy
Petitions Examiner
Office of Petitions

UNITED STATES PATENT AND TRADEMARK OFFICE

Commissioner for Patents
United States Patent and Trademark Office
P.O. Box 1450
Alexandria, VA 22313-1450
www.uspto.gov

KLAUBER & JACKSON
411 Hackensack Avenue, 4th Fl.
Hackensack,NJ 07601

COPY MAILED

OCT 27 2004

OFFICE OF PETITIONS

In re Application of :
Maceri and Hauf :
Application No.: 10/790,254 : DECISION ACCORDING
Filed: March 1, 2004 : RULE 47(a) STATUS
Attorney Docket No: 2814-1-001 :
For: MEAT PRODUCT FOR FEEDING ANIMALS

This is in response to the petition under 37 CFR 1.47(a), filed September 20, 2004.

The petition is **GRANTED**.

The above-identified application and papers have been reviewed and found in compliance with 37 CFR 1.47(a). This application is hereby accorded Rule 1.47(a) status.

The above-cited application was filed on March 1, 2004, without a declaration and filing fee. On May 20, 2004, a Notice to File Missing Parts of Nonprovisonal Application was mailed requiring a properly executed oath or declaration and a surcharge, payment of the filing fee and additional claim fees. The notice set an extendable period for reply of two months from its mailing date. The instant petition under 37 CFR 1.47(a) was filed on September 20, 2004, with a request for an extension of time within the second month.

Petitioner has shown that inventor Maceri has constructively refused join the prosecution of the application. The above-identified application and papers have been reviewed and found in compliance with 37 CFR 1.47(a). This application is hereby accorded Rule 1.47(a) status.

As provided in Rule 1.47(c), this Office will forward notice of this application's filing to the non-signing inventor at the addresses given in the petition. Notice of the filing of this application will also be published in the Official Gazette.

This application will be forwarded to the Office of Initial Patent Examination for further processing.

Telephone inquiries should be directed to the undersigned at (571) 272-3222.

Kenya A. McLaughlin
Petitions Attorney
Office of Petitions

UNITED STATES PATENT AND TRADEMARK OFFICE

Commissioner for Patents
United States Patent and Trademark Office
P.O. Box 1450
Alexandria, VA 22313-1450
www.uspto.gov

Cosimo Maceri
C/Belgica, N°. 59-3° "B"
Parque Europa
28320 Pinto
Madrid
SPAIN

COPY MAILED

OCT 27 2004

OFFICE OF PETITIONS

In re Application of :
Maceri and Hauf :
Application No. 10/790,254 : LETTER
Filed: March 1, 2004 :
Attorney Docket No. 2814-1-001 :
For: MEAT PRODUCT FOR FEEDING ANIMALS

Dear Mr. Maceri:

You are named as a joint inventor in the above-identified United States patent application filed under the provisions of 35 U.S.C. 116 (United States Code) and 37 CFR 1.47(a), Rules of Practice in Patent Cases. Should a patent be granted on the application you will be designated therein as a joint inventor.

As a joint inventor, you are entitled to inspect any paper in the file wrapper of the application, order copies of all or any part thereof (at a prepaid cost per 37 CFR 1.19) or make your position of record in the application. Alternatively, you may arrange to do any of the preceding through a registered patent attorney or agent presenting written authorization from you. If you care to join the application, counsel of record (see below) would presumably assist you. Joining in the application would entail the filing of an appropriate oath or declaration by you pursuant to 37 CFR 1.63. It should be further noted that any assignee of record of the entire interest in the application may request that the inventor(s) be excluded from access to the application. If the request is granted, you will be informed of that fact and will only be permitted to inspect the application on sufficient showing of why such inspection is necessary to conserve your rights. See *MPEP* 106, citing, *In re The Kellog Switchboard & Supply Company*, 1906 C.D. 274 (Comm'r Pat. 1906).

Telephone inquiries regarding this communication should be directed to Petitions Attorney Kenya A. McLaughlin at (571) 272-3222. Requests for information regarding your application should be directed to the File Information Unit at (703) 308-2733. Information regarding how to pay for and order a copy of the application, or a specific paper in the application, should be directed to Certification Division at (703) 308-9726 or 1-800-972-6382 (outside the Washington D.C. area).

Kenya A. McLaughlin
Petitions Attorney
Office of Petitions

KLAUBER & JACKSON
411 Hackensack Avenue, 4th Fl.
Hackensack, NJ 07601

UNITED STATES PATENT AND TRADEMARK OFFICE

Commissioner for Patents
United States Patent and Trademark Office
P.O. Box 1450
Alexandria, VA 22313-1450
www.uspto.gov

PHILIP S. JOHNSON
JOHNSON & JOHNSON
ONE JOHNSON & JOHNSON PLAZA
NEW BRUNSWICK NJ 08933-7003

COPY MAILED

AUG 3 1 2006

OFFICE OF PETITIONS

In re Application of :
Berkner, et al. :
Application No. 10/790,274 : DECISION ON PETITION
Filed: March 1, 2004 : UNDER 37 CFR 1.78(a)(6)
Attorney Docket No. PRD-2043-USA-NP :

This is a decision on the petition under 37 CFR § 1.78(a)(6), filed May 16, 2006, to accept an unintentionally delayed claim under 35 U.S.C. § 119(e) for benefit of priority to the prior-filed provisional application set forth in the concurrently filed amendment.

The petition is **DISMISSED AS MOOT.**

The petition is accompanied by an amendment to the first sentence of the specification following the title to include a reference to the prior-filed provisional application. A reference to the prior-filed provisional application was also included in the first sentence of the specification, as originally filed, following the title. A petition under 37 CFR 1.78(a)(6) to make a claim of priority to an earlier filed provisional application is only required when the claim for priority to the earlier filed provisional application is not made within the period prescribed by 37 CFR 1.78(a)(5)(ii). In this instance, the claim for priority to the earlier filed provisional application was made on filing, and the Office noted the claim for priority to the prior-filed provisional application in the originally filed specification, as shown by its inclusion on the filing receipt. The issue presented by the instant petition is moot; the petition is dismissed, accordingly.

In view of the above, the $1,370.00 petition fee submitted is unnecessary and will be refunded to petitioner's deposit account in due course.

Any questions concerning this decision on petition may be directed to Kenya A. McLaughlin, Petitions Attorney, at (571) 272-3222. All other inquiries concerning either the examination procedures or status of the application should be directed to the Technology Center.

This application is being referred to Technology Center AU 1625 for consideration by the examiner of applicant's entitlement to claim benefit of priority under 35 U.S.C. § 119(e) to the prior-filed application.

Frances Hicks
Lead Petitions Examiner
Office of Petitions

UNITED STATES PATENT AND TRADEMARK OFFICE

Commissioner for Patents
United States Patent and Trademark Office
P.O. Box 1450
Alexandria, VA 22313-1450
www.uspto.gov

MAILED

JUL 19 2004

Director's Office
Group 3700

Nuhim Heifets
1125 ¼ N. Detroit St.
Los Angeles, CA 90046

In re application of
Nuhim Heifets

Serial Number: 10/790278
Filed: March 01, 2004

DECISION ON PETITION TO MAKE SPECIAL UNDER 37 CFR. 1.102(c)

For: **RECIPROCATING PISTON MOTOR**

This is a decision on the petition filed on March 01, 2004, under 37 CFR. 1.102(c) to make special the above identified application because of the age/health of the applicant. Since the requirements of the M.P.E.P Section 708.02 IV have been met, the petition will be GRANTED.

The examiner is directed (1) to make an interference search for possible interfering applications, (2) to promptly examine this application out of turn, and (3) if any interfering application is discovered, to examine such application simultaneously and state in the first official letter of such application that it is being taken out of turn because of a possible interference.

Petitioner is advised that this application will continue to be special, throughout its entire prosecution and pendency, including interference or appeal, if any, only is Petitioner makes a prompt bona-fide effort, in response to each Office action, to place the application in condition for allowance, even if it is necessary to conduct an interview with the Examiner to accomplish this purpose.

Summary: Decision on Petition **GRANTED**.

Richard A. Bertsch
Director
Technology Center 3700
(703) 308-0975

rt: 7/15/04

UNITED STATES PATENT AND TRADEMARK OFFICE

UNITED STATES DEPARTMENT OF COMMERCE
United States Patent and Trademark Office
Address: COMMISSIONER FOR PATENTS
P.O. Box 1450
Alexandria, Virginia 22313-1450
www.uspto.gov

APPLICATION NO.	FILING DATE	FIRST NAMED INVENTOR	ATTORNEY DOCKET NO.	CONFIRMATION NO.
10/790,279	03/01/2004	David Dino	EL-8182	9542

23911 7590 11/02/2005

CROWELL & MORING LLP
INTELLECTUAL PROPERTY GROUP
P.O. BOX 14300
WASHINGTON, DC 20044-4300

EXAMINER	
TUCKER, PHILIP C	

ART UNIT	PAPER NUMBER
1712	

DATE MAILED: 11/02/2005

Please find below and/or attached an Office communication concerning this application or proceeding.

UNITED STATES PATENT and TRADEMARK OFFICE
UNDER SECRETARY OF COMMERCE FOR INTELLECTUAL PROPERTY AND
DIRECTOR OF THE UNITED STATES PATENT AND TRADEMARK OFFICE
WASHINGTON, D.C. 20231
WWW.USPTO.GOV

Mailed:

RPG
Paper No. 10/31/05

In re Application of David Dino
Serial No.: 10/790,279
Filed: March 1, 2004

DECISION ON PETITION UNDER *37 CFR 1.48(a)*

For: AQUEOUS-BASED OIL WELL DRILLING FLUIDS CONTAINING HIGH AMYLOSE STARCH POLYMERS

This is a decision on the PETITION TO CORRECT INVENTORSHIP, filed July 2, 2004 to correct inventorship under 37 CFR 1.48(a) by adding the name of Leon Mentink to the list of inventors of the instant application.

It is noted that the applicant has met the requirements of 37 C.F.R. § 1.48(a) by (1) submitting a request to correct the inventorship that sets forth the desired inventorship change; (2) providing a statement from each person being added as an inventor that the error in inventorship occurred without deceptive intention on his or her part; (3) providing a declaration of the actual inventors as required by 37 C.F.R. § 1.63; (4) providing the processing fee set forth in 1.17(i); and, (5) providing the written consent of the assignee.

The request is **GRANTED**.

The application file is being forwarded to the appropriate section of the Patent and Trademark Office for correction of the record.

Randy Gulakowski
Supervisory Patent Examiner
Art Unit 1712
Technology Center 1700

CROWELL & MORING LLP
Intellectual Property Group
P.O. Box 14300
Washington, DC 20044-4300

UNITED STATES PATENT AND TRADEMARK OFFICE

Commissioner for Patents
United States Patent and Trademark Office
P.O. Box 1450
Alexandria, VA 22313-1450
www.uspto.gov

COPY MAILED

JUN 15 2005

OFFICE OF PETITIONS

FAY SHARPE FAGAN MINNCIH & MCKEE
1100 SUPERIOR AVE
7TH FLOOR
CLEVELAND OH 44114-2579

In re Application of :
Murphy, et al. :
Application No. 10/790,304 : ON PETITION
Filed: March 1, 2004 :
Attorney Docket No. RYLZ 2 00658-1 :

This is a decision on the petition under 37 CFR 1.78(a)(3), filed August 30, 2004, to accept an unintentionally delayed claim under 35 U.S.C. 120 for the benefit of prior filed nonprovisional application no. 09/944,731.

This petition under 37 CFR 1.78(a)(3) is **DISMISSED AS MOOT**.

A petition under 37 CFR 1.78(a)(3) is only applicable to those applications filed on or after November 29, 2000. Further, the petition is appropriate only after the expiration of the period specified in 37 CFR 1.78(a)(2), and must be filed during the pendency of the nonprovisional application. In addition, the petition must accompanied by:

(1) the surcharge as set forth in 37 CFR 1.17(t);

(2) a statement that the entire delay between the date the claim was due under 37 CFR 1.78(a)(2) and the date the claim was filed as unintentional; and

(3) the reference to the prior filed provisional application, supplied in an application data sheet, or as an amendment in the first sentence of the specification following the title.

The instant nonprovisional application was filed on March 1, 2004. A reference to the prior filed nonprovisional application was included in the application transmittal letter.

Where a claim for priority under 37 CFR 1.78(a)(2) is not included in the first sentence of the specification or in an Application Data Sheet but does appear either in the oath or declaration or a transmittal letter filed with the application **and the Office notes the claim for priority**, no petition will be required to accept a late claim for priority. This is because the application would have been scheduled for publication on the basis of the information concerning the claim submitted elsewhere in the application within the time period set forth in 37 CFR 1.78(a)(2). However, on the other hand, if the USPTO does not note the claim for priority to the provisional application in the oath or declaration or transmittal letter submitted with the application, a petition will be required to accept a late claim for priority under 37 CFR 1.78(a)(3).[1]

In the instant case, the Office noted the claim for priority of the nonprovisional application.

Accordingly, the $130 fee submitted for the petition is unnecessary and has been refunded to Deposit Account No. 06-0308. Please note, however, that a petition under 37 CFR 1.78 requires a fee of $1,370, subject to small entity reduction.

This application is being returned to Group Art Unit 1724 for examination in due course.

Telephone inquiries concerning this matter should be directed to Petitions Attorney Cliff Congo at 571-272-3207.

Charles Pearson
Director
Office of Petitions

[1] See 66 Federal Register 67087 at 67089 (Dec. 28, 2001), effective December 28, 2001.

UNITED STATES PATENT AND TRADEMARK OFFICE

Commissioner for Patents
United States Patent and Trademark Office
P.O. Box 1450
Alexandria, VA 22313-1450
www.uspto.gov

Levine, Bagade, Han, LLP
2483 East Bayshore Road, Suite 100
Palo Alto, CA 94303

COPY MAILED

APR 0 6 2007

OFFICE OF PETITIONS

In re Application of
Gerald W. Kearby
Application No. 10/790,319
Filed: March 1, 2004
Attorney Docket No. NT 1001 - US

DECISION ON PETITION
TO WITHDRAW
FROM RECORD

This is a decision on the Request to Withdraw as attorney or agent of record under 37 C.F.R. § 1.36(b), filed February 6, 2007.

The request is **NOT APPROVED**.

A grantable request to withdraw as attorney/agent of record must be signed by every attorney/agent seeking to withdraw or contain a clear indication that one attorney is signing on behalf of another/others. A request to withdraw will not be approved unless at least 30 (thirty) days would remain between the date of approval and the later of the expiration date of a time to file a response or the expiration date of the maximum time period which can be extended under 37 C.F.R.
§ 1.136(a).

The Office cannot approve the request at this time since the reasons provided do not meet any of the conditions under the mandatory or permissive categories enumerated in 37 CFR 10.40. Section 10.40 of Title 37 of the Code of Federal Regulation states, "[a] practitioner shall not withdraw from employment in a proceeding before the Office without permission from the Office[.]" More specifically, 37 CFR 10.40 states, "[i]f paragraph (b) of this section is not applicable, a practitioner may not request permission to withdraw in matter pending before the Office unless such request or such withdrawal is" for one the permissive reasons listed in 37 CFR 10.40(c). The reasons set forth in the request, "[p]er NeuroTone, Inc.'s (the assignee) request of January 19, 2007 transfer all patent files to client", does not meet any the conditions set forth in 37 CFR 10.40.

In this regard, the record indicates that on June 7, 2004, a Statement under 37 CFR § 3.73(b), signed by Gerald W. Kearby as CEO for SPL Development , Inc. was filed. Additionally, a power of attorney executed by co-inventor Gerald W. Kearby was also submitted appointing the practitioners associated with Customer Number 40518. As assignee, NeuroTone, Inc., does not appear to be an assignee in this application, as stated by requestor David A. Levine in the request, the request to withdraw the attorneys associated with Customer Number 40518 cannot be granted at this time.

A courtesy copy of this decision is being mailed to applicant at the address noted in the petition.

All future communications from the Office will continue to be directed to the above-listed address until otherwise properly notified by applicant.

Telephone inquiries concerning this decision should be directed to Kimberly Inabinet at 571-272- 4618.

Frances Hicks
Petitions Examiner
Office of Petitions

cc: Gerald Wayne Kearby
NeuroTone, Inc.
2317 Broadway Street
Suite 250
Redwood City, CA 94083

UNITED STATES PATENT AND TRADEMARK OFFICE

Commissioner for Patents
United States Patent and Trademark Office
P.O. Box 1450
Alexandria, VA 22313-1450
www.uspto.gov

COPY MAILED

AUG 15 2007

OFFICE OF PETITIONS

Levine, Bagade, Han, LLP
2483 East Bayshore Road, Suite 100
Palo Alto, CA 94303

In re Application of :
George W. Kearby :
Application No. 10/790,319 : DECISION ON PETITION
Filed: March 1, 2004 : TO WITHDRAW
Attorney Docket No. NT 1001 - US : FROM RECORD
:

This is a decision on the Request to Withdraw as attorney or agent of record under 37 C.F.R § 1.36(b), filed May 1, 2007.

The request is **APPROVED**.

A grantable request to withdraw as attorney/agent of record must be signed by every attorney/agent seeking to withdraw or contain a clear indication that one attorney is signing on behalf of another/others. A request to withdraw will not be approved unless at least 30 (thirty) days would remain between the date of approval and the later of the expiration date of a time to file a response or the expiration date of the maximum time period which can be extended under 37 C.F.R. § 1.136(a).

The request was signed by David A. Levine on behalf of all attorneys associated with customer number 40518. All attorneys/agents associated with customer number 40518 have been withdrawn.

The correspondence address of record has been changed and the new correspondence address is the address indicated below.

There are no outstanding Office actions at this time.

Telephone inquiries concerning this decision should be directed to Kimberly Inabinet at 571-272-4618.

Frances Hicks
Petitions Examiner
Office of Petitions

cc: Gerald W. Kearby
NeuroTone, Inc.
2317 Broadway Street
Suite 250
Redwood City, CA 94063

UNITED STATES PATENT AND TRADEMARK OFFICE

UNITED STATES DEPARTMENT OF COMMERCE
United States Patent and Trademark Office
Address: COMMISSIONER FOR PATENTS
P.O. Box 1450
Alexandria, Virginia 22313-1450
www.uspto.gov

APPLICATION NUMBER	FILING OR 371 (c) DATE	FIRST NAMED APPLICANT	ATTY. DOCKET NO./TITLE
10/790,319	03/01/2004	Gerald Wayne Kearby	NT 1001 - US

CONFIRMATION NO. 9003

40518
LEVINE BAGADE HAN LLP
2483 EAST BAYSHORE ROAD, SUITE 100
PALO ALTO, CA 94303

OC000000025320118

Date Mailed: 08/13/2007

NOTICE REGARDING CHANGE OF POWER OF ATTORNEY

This is in response to the Power of Attorney filed 05/01/2007.

- The withdrawal as attorney in this application has been accepted. Future correspondence will be mailed to the new address of record. 37 CFR 1.33.

Kimberly Bravinet

Office of Initial Patent Examination (571) 272-4000, or 1-800-PTO-9199

FORMER ATTORNEY/AGENT COPY

UNITED STATES PATENT AND TRADEMARK OFFICE

COMMISSIONER FOR PATENTS
UNITED STATES PATENT AND TRADEMARK OFFICE
P.O. BOX 1450
ALEXANDRIA, VA 22313-1450
www.uspto.gov

HORST KASPER
13 FOREST DRIVE
WARREN NJ 07059

COPY MAILED

JUN 20 2008

In re Application of :
Kosun : DECISION ON PETITION
Application No. 10/790,323 :
Filed: February 27, 2004 :
Atty. Dkt. No.: LAC201T3 :

This decision is in response to the petition to withdraw the holding of abandonment under 37 CFR 1.181 filed April 25, 2008.

The petition under 37 CFR 1.181 to withdraw the holding of abandonment is hereby GRANTED.

This application was held abandoned for failure to timely submit a proper reply to the non-final Office action mailed July 6, 2007. The non-final Office action set a three month shortened statutory period of time for reply. Notice of Abandonment was mailed March 18, 2008.

Petitioner argues that a proper response to the non-final Office action was timely submitted on December 6, 2007 in accordance with the certificate of mailing procedures set forth at 37 CFR 1.8. Petitioners have also included as proof of submission and proof of USPTO receipt of the response a postcard date-stamped December 10, 2007. Petitioner has also submitted a copy of the reply purportedly filed December 6, 2007.

Review of Office records reveals that a response received at the USPTO on December 10, 2007, while intended for instant application did not include the correct application serial number. The response improperly cited U.S. App. No. 10/790,232. As a result of applicants' error, the application was held abandoned.

Correspondence directed to the Patent and Trademark Office concerning a previously filed application for a patent must identify the application number and filing date assigned to that application by the Office. See, 37 CFR 1.5(a). In the above-referenced application, applicants failed to correctly identify the application by citing an incorrect application number in the response. The Office elects, in this instance, to treat applicants' error as a correctable minor error as permitted

under MPEP 502. However, applicants are strongly reminded that minor errors, such as occurred in the instant application, are to be avoided in the future by the careful review of correspondence prior to submission to the Office. It is note that applicant has on three occasions (10/23/06; 12/10/07; and 12/13/07) misdirected communications intended for the instant application to the incorrect application number. The Office may not deem to future errors "minor" within the meaning of MPEP 502.

In view of the evidence thereof, the petition to withdraw the holding of abandonment is hereby GRANTED.

The Notice of Abandonment is hereby VACATED and the holding of abandonment is WITHDRAWN.

This application is being forwarded to Technology Center 2600 for further processing.

Telephone inquiries concerning this matter may be directed to the undersigned at (571) 272-3205.

Alesia M. Brown
Petitions Attorney
Office of Petitions

UNITED STATES PATENT AND TRADEMARK OFFICE

UNITED STATES DEPARTMENT OF COMMERCE
United States Patent and Trademark Office
Address: COMMISSIONER FOR PATENTS
P.O. Box 1450
Alexandria, Virginia 22313-1450
www.uspto.gov

DARDI & HERBERT, PLLC
220 S. 6TH ST.
SUITE 2000, U.S. BANK PLAZA
MINNEAPOLIS, MN 55402

Mail Date: 04/21/2010

Applicant	: Ajay K. Luthra	: DECISION ON REQUEST FOR
Patent Number	: 7655038	: RECALCULATION of PATENT
Issue Date	: 02/02/2010	: TERM ADJUSTMENT IN VIEW
Appliction No	: 10/790,338	: OF WYETH AND NOTICE OF INTENT TO
Filed	: 03/01/2004	: ISSUE CERTIFICATE OF CORRECTION
		:

The Request for Recalculation is **GRANTED** to the extent indicated.

The patent term adjustment has been determined to be **780** days. The USPTO will *sua sponte* issue a certificate of correction reflecting the amount of PTA days determined by the recalculation.

Prior to the issuance of the certificate of correction, the USPTO will afford patentee an opportunity to be heard and request reconsideration. Accordingly, patentee has **one month or thirty (30) days**, whichever is longer, to file a request for reconsideration of this patent term adjustment calculation. See 35 U.S.C. 154(b)(3)(B)(ii) and 37 CFR 1.322(a)(4). No extensions of time will be granted under 37 CFR 1.136.

Patentee should use document code PET.OP if electronically filing a request for reconsideration of this patent term adjustment calculation. The patentee must also include the information required by 37 CFR 1.705(b)(2) and the fee required by 37 CFR 1.18(e). If patentee does not file a timely request for reconsideration of this patent term adjustment calculation including the information required by 37 CFR 1.705(b)(2) and the fee required by 37 CFR 1.18(e), the USPTO will issue a certificate of correction reflecting the PTA determination noted above.

Patentee should be aware that in order to preserve the right to review in the United States District Court for the District of Columbia of the USPTO patent term adjustment determination, patentee must ensure that he or she also take the steps required under 35 U.S.C. 154(b)(4)(A) in a timely manner. Nothing in the request for recalculation should be construed as providing an alternative time frame for commencing a civil action under 35 U.S.C. 154(b)(4)(A).

Any questions concerning this decision should be directed to the Office of Patent Legal Administration at 571-272-7702.

UNITED STATES PATENT AND TRADEMARK OFFICE

Commissioner for Patents
United States Patent and Trademark Office
P.O. Box 1450
Alexandria, VA 22313-1450
www.uspto.gov

GREER BURNS & CRAIN
300 S. WACKER DRIVE, 25TH FLOOR
CHICAGO, IL 60606

COPY MAILED

MAR 3 1 2006

OFFICE OF PETITIONS

In re Application of :
Joseph Z. Wascow et al :
Application No. 10/790,361 : DECISION GRANTING PETITION
Filed: March 1, 2004 : UNDER 37 CFR 1.313(c)(2)
Attorney Docket No. 0212.69069 :

This is a decision on the petition, filed March 29, 2006, under 37 CFR 1.313(c)(2) to withdraw the above-identified application from issue after payment of the issue fee.

The petition is **GRANTED**.

The above-identified application is withdrawn from issue for consideration of a submission under 37 CFR 1.114 (request for continued examination). See 37 CFR 1.313(c)(2).

Petitioner is advised that the issue fee paid on November 4, 2005 in the above-identified application cannot be refunded. If, however, the above-identified application is again allowed, petitioner may request that it be applied towards the issue fee required by the new Notice of Allowance.[1]

Telephone inquiries should be directed to the undersigned at (571) 272-3218.

This matter is being referred to Technology Center AU 2839 for processing of the request for continued examination under 37 CFR 1.114 and for consideration of the Information Disclosure Statement.

Frances Hicks
Petitions Examiner
Office of Petitions

C:\Documents and Settings\FHicks\My Documents\470\Mar9\790361.wpd

---

[1] *The request to apply the issue fee to the new Notice may be satisfied by completing and returning the new Part B – Fee(s) Transmittal Form (along with any balance due at the time of submission), which includes the following language thereon: "The Director of the USPTO is requested to apply the Issue Fee and Publication Fee (if any) or to re-apply any previously paid issue fee in the application identified above. Petitioner is advised that, whether a fee is indicated as being due or not, the Issue Fee Transmittal Form* ***must*** *be completed and timely submitted to avoid abandonment. Note the language in bold text on the first page of the Notice of Allowance and Fee(s) Due (PTOL-85).*

UNITED STATES PATENT AND TRADEMARK OFFICE

UNITED STATES DEPARTMENT OF COMMERCE
United States Patent and Trademark Office
Address: COMMISSIONER FOR PATENTS
P.O. Box 1450
Alexandria, Virginia 22313-1450
www.uspto.gov

APPLICATION NO.	FILING DATE	FIRST NAMED INVENTOR	ATTORNEY DOCKET NO.	CONFIRMATION NO.
10/790,367	03/01/2004	Dominick H. Salvato	1219 / SYMBP174USA	9353

23623 7590 08/06/2007

AMIN, TUROCY & CALVIN, LLP
1900 EAST 9TH STREET, NATIONAL CITY CENTER
24TH FLOOR,
CLEVELAND, OH 44114

EXAMINER	
NGUYEN, KIMBERLY D	
ART UNIT	PAPER NUMBER
2876	

MAIL DATE	DELIVERY MODE
08/06/2007	PAPER

Please find below and/or attached an Office communication concerning this application or proceeding.

The time period for reply, if any, is set in the attached communication.

DETAILED ACTION

UNITED STATES PATENT AND TRADEMARK OFFICE

Commissioner for Patents
United States Patent and Trademark Office
P.O. Box 1450
Alexandria, VA 22313-1450
www.uspto.gov

In re Patent No. SALVATO ET AL.
Issue Date: 12/12/06
Appl No.: 10/790,367
Filed: March 01, 2004
For: Correcting Continuation Data

DECISION GRANTING PETITION

This is a decision on the petition filed 2/20/07 to correct continuation data.

The petition is granted.

The patented file is being forwarded to Certificate of Corrections Branch for issuance of a certificate correcting the continuation data.

Michael G. Lee
Supervisory Patent Examiner
Art Unit 2876
Technology Center 2800

AMIN, TUROCY & CALVIN, LLP
1900 EAST 9TH STREET, NATIONAL CITY CENTER
24TH FLOOR,
CLEVELAND, OH 44114

PTO/SB/44 (07-03)
Approved for use through 01/31/2004. OMB 0651-0033
U.S. Patent and Trademark Office; U.S. DEPARTMENT OF COMMERCE
Under the Paperwork Reduction Act of 1995, no persons are required to respond to a collection of information unless it displays a valid OMB control number.
(Also Form PTO-1050)

UNITED STATES PATENT AND TRADEMARK OFFICE
CERTIFICATE OF CORRECTION

PATENT NO. : 7,147,163 B2
DATED : December 12, 2006
INVENTOR(S) : Dominick H. Salvato, et al.

It is certified that error appears in the above-identified patent and that said Letters Patent is hereby corrected as shown below:

Related U.S. Application Data:

Please replace:

"Continuation of application No. 09/912,162, filed on Jul. 24, 2001, now abandoned."

with

"Continuation of application No. 09/912,162, filed on Jul. 24, 2001, now U.S. Patent No. 6,820,813."

MAILING ADDRESS OF SENDER:

AMIN, TUROCY & CALVIN, LLP
1900 E. 9th Street, 24th Floor
Cleveland, Ohio 44114

PATENT NO. 7,147,163 B2

No. of additional copies

This collection of information is required by 37 CFR 1.322, 1.323, and 1.324. The information is required to obtain or retain a benefit by the public which is to file (and by the USPTO to process) an application. Confidentiality is governed by 35 U.S.C. 122 and 37 CFR 1.14. This collection is estimated to take 1.0 hour to complete, including gathering, preparing, and submitting the completed application form to the USPTO. Time will vary depending upon the individual case. Any comments on the amount of time you require to complete this form and/or suggestions for reducing this burden, should be sent to the Chief Information Officer, U.S. Patent and Trademark Office, U.S. Department of Commerce, P.O. Box 1450, Alexandria, VA 22313-1450. DO NOT SEND FEES OR COMPLETED FORMS TO THIS ADDRESS. **SEND TO: Attention Certificate of Corrections Branch, Commissioner for Patents, P.O. Box 1450, Alexandria, VA 22313-1450.**

If you need assistance in completing the form, call 1-800-PTO-9199 and select option 2.

UNITED STATES PATENT AND TRADEMARK OFFICE

Commissioner for Patents
United States Patent and Trademark Office
P.O. Box 1450
Alexandria, VA 22313-1450
www.uspto.gov

PATRICK REILLY
BOX 7218
SANTA CRUZ CA 95061-7218

COPY MAILED

NOV 29 2007

OFFICE OF PETITIONS

In re Application of :
Ross W. Bauer :
Application No. 10/790,376 : ON PETITION
Filed: March 1, 2004 :
Attorney Docket No. RB-0001US :

This is a decision on the petition under 37 CFR 1.137(b), filed July 30, 2007, to revive the above-identified application.

The petition under 37 CFR 1.137(b) is **GRANTED**.

The above-identified application became abandoned for failure to timely file a response to the Notice Requiring Excess Claims Fees, mailed November 29, 2006. This notice set a period for reply of one month for applicant to submit $400. No fee having been received, the application became abandoned on December 30, 2006. The Office mailed a Notice of Abandonment on June 20, 2007.

With the instant petition, applicant paid the petition fee, made the proper statement of unintentional delay, and submitted the $400 excess claims fees.

The matter is being forwarded to Group Art Unit 3643 for consideration of the Amendment filed November 7, 2006.

Telephone inquiries concerning this decision should be directed to the undersigned at (571)272-3207.

Cliff Congo
Petitions Attorney
Office of Petitions

UNITED STATES PATENT AND TRADEMARK OFFICE

Commissioner for Patents
United States Patent and Trademark Office
P.O. Box 1450
Alexandria, VA 22313-1450
www.uspto.gov

GARMIN LTD.
C/O GARMIN INTERNATIONAL INC.
ATTN: LEGAL IP
1200 EAST 151ST STREET
OLATHE KS 66062

COPY MAILED

MAR 26 2007

OFFICE OF PETITIONS

ON PETITION

In re Application of :
David J. Laverick et al :
Application No. 10/790,382 :
Filed: March 1, 2004 :
Attorney Docket No. 702.320 :

This is a decision on the petition, filed March 22, 2007, under 37 CFR 1.313(c)(2) to withdraw the above-identified application from issue after payment of the issue fee.

The petition is **GRANTED.**

The above-identified application is withdrawn from issue for consideration of a submission under 37 CFR 1.114 (request for continued examination). See 37 CFR 1.313(c)(2).

Petitioner is advised that the issue fee paid on December 20, 2006 in the above-identified application cannot be refunded. If, however, the above-identified application is again allowed, petitioner may request that it be applied towards the issue fee required by the new Notice of Allowance.[1]

Telephone inquiries should be directed to the undersigned at (571) 272-3208.

The examiner of Technology Center AU 3663 will consider the request for continued examination under 37 CFR 1.114.

Karen Creasy

Karen Creasy
Petitions Examiner
Office of Petitions

---

[1] The request to apply the issue fee to the new Notice may be satisfied by completing and returning the new Issue Fee Transmittal Form PTOL-85(b), which includes the following language thereon: "Commissioner for Patents is requested to apply the Issue Fee and Publication Fee (if any) or re-apply any previously paid issue fee to the application identified above." Petitioner is advised that, whether a fee is indicated as being due or not, the Issue Fee Transmittal Form **must** be completed and timely submitted to avoid abandonment. Note the language in bold text on the first page of the Notice of Allowance and Fee(s) Due (PTOL-85).

UNITED STATES PATENT AND TRADEMARK OFFICE

COMMISSIONER FOR PATENTS
UNITED STATES PATENT AND TRADEMARK OFFICE
P.O. BOX 1450
ALEXANDRIA, VA 22313-1450
www.uspto.gov

AKERMAN SENTERFITT
P.O. BOX 3188
WEST PALM BEACH, FL 33402-3188

COPY MAILED

JUL 07 2006

OFFICE OF PETITIONS

In re Application of :
Wolfgang Becker, et. al. :
Application No. 10/790,387 : ON PETITION
Filed: March 1, 2004 :
Attorney Docket No. 3926.071 :

This is a decision on the petition under 37 CFR 1.137(b), filed by facsimile transmission on February 15, 2006, to revive the above-identified application.

The application became abandoned for failure to timely respond to the Notice of Allowance and Fee(s) Due mailed November 2, 2005.

The petition satisfies the requirements of 37 CFR 1.137(b) in that petitioner has supplied (1) the reply in the form of $1,400 for payment of the issue fee and $300 for payment of the publication fee; (2) the petition fee of $1,500; and (3) an adequate statement of unintentional delay. Therefore, the petition is **GRANTED**.

The Change of Correspondence Address filed on February 15, 2006, has been accepted and made of record.

This application file is being referred to the Office of Publications to be processed into a patent.

Telephone inquiries concerning this decision should be directed to the undersigned at (571) 272-3226.

Andrea Smith
Petitions Examiner
Office of Petitions

UNITED STATES PATENT AND TRADEMARK OFFICE

Commissioner for Patents
United States Patent and Trademark Office
P.O. Box 1450
Alexandria, VA 22313-1450
www.uspto.gov

BAKER BOTTS
PATENT DEPARTMENT
98 SAN JACINTO BLVD., SUITE 1500
AUSTIN TX 78701-4039

COPY MAILED

OCT 2 5 2005

OFFICE OF PETITIONS

In re Application of :
Ralf Bohnig et al :
Application No. 10/790,424 : ON PETITION
Filed: March 1, 2004 :
Attorney Docket No. 071308.0509 :

This is a decision on the petition, filed October 19, 2005, under 37 CFR 1.313(c)(2) to withdraw the above-identified application from issue after payment of the issue fee.

The petition is **GRANTED.**

The above-identified application is withdrawn from issue for consideration of a submission under 37 CFR 1.114 (request for continued examination). See 37 CFR 1.313(c)(2).

Petitioner is advised that the issue fee paid on March 15, 2005 in the above-identified application cannot be refunded. If, however, the above-identified application is again allowed, petitioner may request that it be applied towards the issue fee required by the new Notice of Allowance.[1]

Telephone inquiries should be directed to the undersigned at (571) 272-3208.

The examiner of Technology Center AU 2856 will consider the request for continued examination under 37 CFR 1.114.

Karen Creasy

Karen Creasy
Petitions Examiner
Office of Petitions
Office of the Deputy Commissioner
for Patent Examination Policy

---

[1] The request to apply the issue fee to the new Notice may be satisfied by completing and returning the new Issue Fee Transmittal Form PTOL-85(b), which includes the following language thereon: "Commissioner for Patents is requested to apply the Issue Fee and Publication Fee (if any) or re-apply any previously paid issue fee to the application identified above." Petitioner is advised that, whether a fee is indicated as being due or not, the Issue Fee Transmittal Form **must** be completed and timely submitted to avoid abandonment. Note the language in bold text on the first page of the Notice of Allowance and Fee(s) Due (PTOL-85).

SCAN! **Please forward case and paper to address shown below.**

SPE RESPONSE FOR CERTIFICATE OF CORRECTION

DATE : 11/17/07

Paper No.: _____

TO SPE OF : ART UNIT 3674 GAY Jennifer (SPE)

SUBJECT : Request for Certificate of Correction for Appl. No.: 10/790428 Patent No.: 7207088

Please respond to this request for a certificate of correction within 7 days.

Please review the requested changes/corrections as shown in the attached certificate of correction. Please complete this form (see below) and forward it with the file to:

Certificates of Correction Branch (CofC)
South Tower - 9A22
Palm Location 7580

HENRY RANDALL
Certificates of Correction Branch
703-308-9390 ext. _____

Thank You For Your Assistance

The request for issuing the above-identified correction(s) is hereby:

Note your decision on the appropriate box.

- ☒ **Approved** — All changes apply.
- ☐ **Approved in Part** — Specify below which changes do not apply.
- ☐ **Denied** — State the reasons for denial below.

Comments: The formal drawings are approved by the examiner. /MW/

/Peter M. Cuomo/
SPE

3673
Art Unit

SEP 13 2007
PATENT & TRADEMARK OFFICE

Cofe

IN THE UNITED STATES PATENT AND TRADEMARK OFFICE

In re application of	:	PATENT APPLICATION
WILLIAM E. ADAMS ET AL.	:	DOOR HOOK WITH REMOVABLE SPACER
Serial No. 10/790,428	:	
Filed March 1, 2004	:	
Patent No. 7,207,088	:	Certificate
Issued April 24, 2007	:	SEP 17 2007
The Formal Drawings have Been approved. /MW/	LETTER	of Correction

Commissioner for Patents
P. O. Box 1450
Alexandria, Virginia 22313-1450

Sir:

Applicants request that a Certificate of Correction be issued to replace the informal drawings (Figures 1-12, Sheets 1-5) printed on the above-identified original letters patent document with the formal drawings (Figures 1-2, Sheets 1-6) submitted with the attached Certificate of Correction form.

Applicants submitted the formal drawings to the Patent and Trademark Office on April 4, 2007 to replace the informal drawings originally filed with the application. A copy of the letter submitted with the formal drawings is attached.

Respectfully submitted,

Lynn J. Alstadt
Registration No. 29,362
BUCHANAN INGERSOLL & ROONEY, P.C.
One Oxford Centre
301 Grant Street, 20th Floor
Pittsburgh, PA 15219
(412) 562-1632

Date: Sept. 10, 2007

SEP 17 2007

PTO/SB/44 (04-05)
Approved for use through 04/30/2007. OMB 0651-0033
U.S. Patent and Trademark Office; U.S. DEPARTMENT OF COMMERCE
Under the Paperwork Reduction Act of 1995, no persons are required to respond to a collection of information unless it displays a valid OMB control number.
(Also Form PTO-1050)

UNITED STATES PATENT AND TRADEMARK OFFICE
CERTIFICATE OF CORRECTION

PATENT NO. : 7,207,088

APPLICATION NO.: 10/790,428

ISSUE DATE : April 24, 2007

INVENTOR(S) : WILLIAM E. ADAMS, GEORGE LEMIEUX

It is certified that an error appears or errors appear in the above-identified patent and that said Letters Patent is hereby corrected as shown below:

Replace the informal drawings (Figures 1-12, Sheets 1-5) printed on the original patent document with the attached formal drawings (Figures 1-12, Sheets 1-6).

MAILING ADDRESS OF SENDER (Please do not use customer number below):

Lynn J. Alstadt, Buchanan Ingersoll & Rooney PC
301 Grant Street, 20th Floor
Pittsburgh, PA 15219

This collection of information is required by 37 CFR 1.322, 1.323, and 1.324. The information is required to obtain or retain a benefit by the public which is to file (and by the USPTO to process) an application. Confidentiality is governed by 35 U.S.C. 122 and 37 CFR 1.14. This collection is estimated to take 1.0 hour to complete, including gathering, preparing, and submitting the completed application form to the USPTO. Time will vary depending upon the individual case. Any comments on the amount of time you require to complete this form and/or suggestions for reducing this burden, should be sent to the Chief Information Officer, U.S. Patent and Trademark Office, U.S. Department of Commerce, P.O. Box 1450, Alexandria, VA 22313-1450. DO NOT SEND FEES OR COMPLETED FORMS TO THIS ADDRESS. **SEND TO: Attention Certificate of Corrections Branch, Commissioner for Patents, P.O. Box 1450, Alexandria, VA 22313-1450.**

If you need assistance in completing the form, call 1-800-PTO-9199 and select option 2.

SEP 17 2007

USPTO IAP21
SEP 13 2007
PATENT & TRADEMARK OFFICE

IN THE UNITED STATES PATENT AND TRADEMARK OFFICE

Group Art Unit 3676	:	PATENT APPLICATION
Examiner Mark A. Williams	:	DOOR HOOK WITH REMOVABLE SPACER
In re application of	:	
WILLIAM E. ADAMS et al.	:	
Serial No. 10/790,428	:	
Filed March 1, 2004	:	
Allowed January 8, 2007		

I hereby certify that this correspondence is being deposited with the United States Postal Service as first class mail in an envelope addressed to:

Commissioner for Patents
P.O. Box 1450
Alexandria, Virginia 22313-1450

on this 4th day of April, 2007

Buchanan Ingersoll & Rooney PC

LETTER

Pittsburgh, Pennsylvania 15219

April 4, 2007

Commissioner for Patents
Post Office Box 1450
Alexandria, Virginia 22313-1450

Sir:

Please substitute the enclosed six sheets of formal drawings containing Figures 1-12 for the informal drawings filed with the application.

Submission of these formal drawings places the application in condition for issue.

Respectfully submitted,

BUCHANAN INGERSOLL, P.C.

Lynn J. Alstadt
Registration No. 29,362
BUCHANAN INGERSOLL, P.C.
One Oxford Centre
301 Grant Street
Pittsburgh, Pennsylvania 15219
Attorney for Applicants

(412) 562-1632

SEP 17 2007

SEP 13 2007
PATENT & TRADEMARK OFFICE

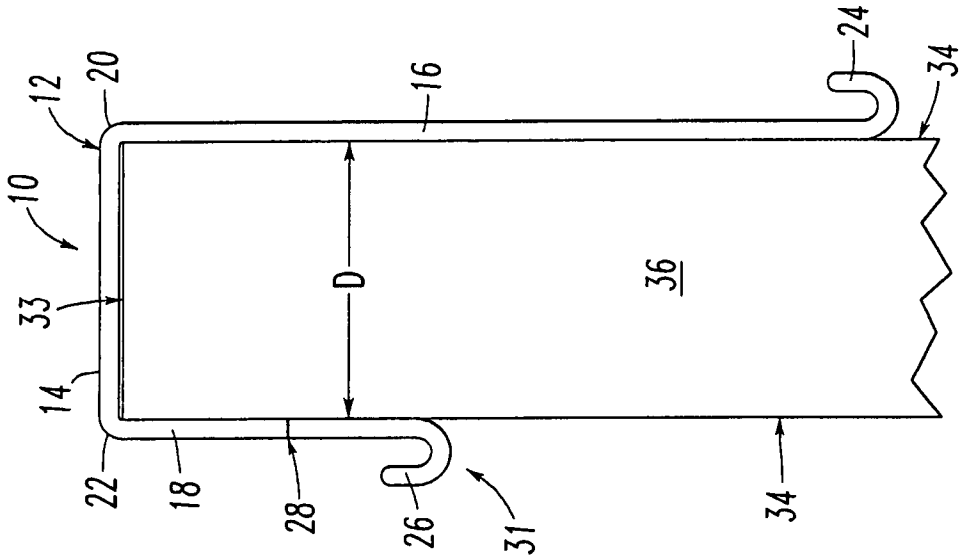

FIG.2

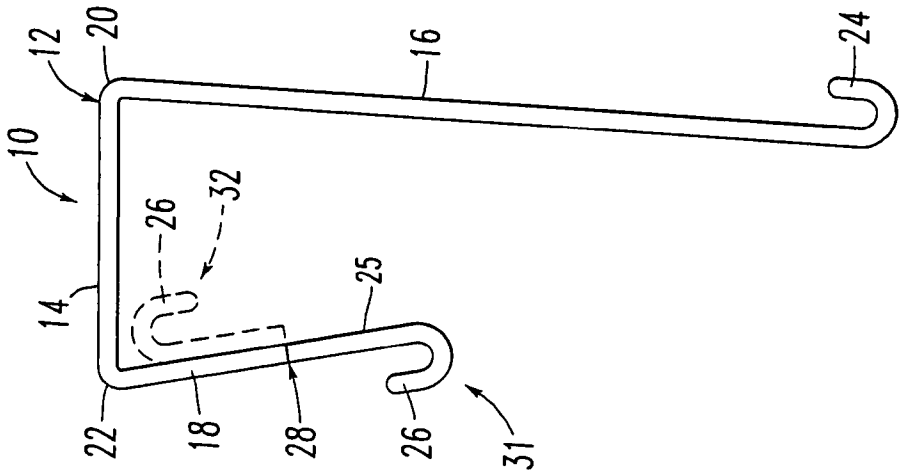

FIG.1

SEP 17 2007

2/6

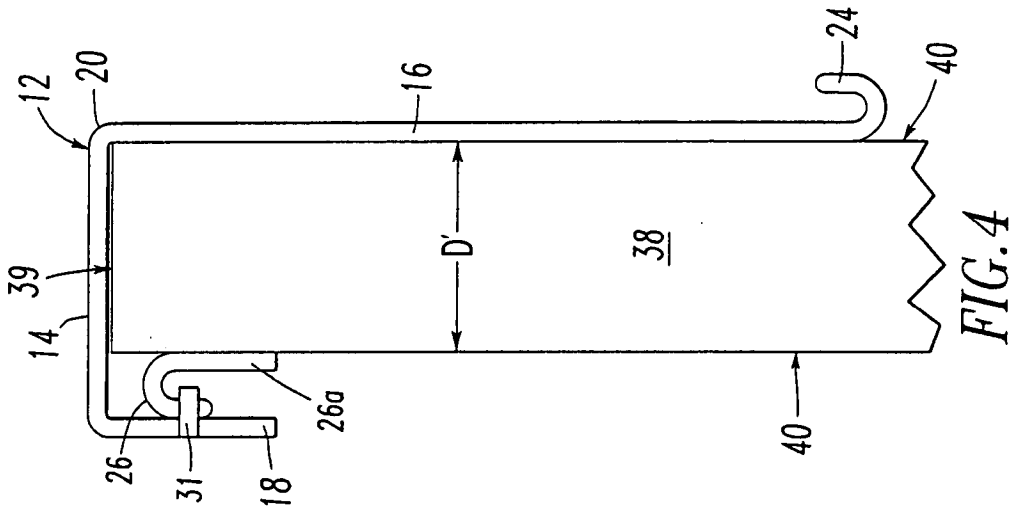

FIG. 4

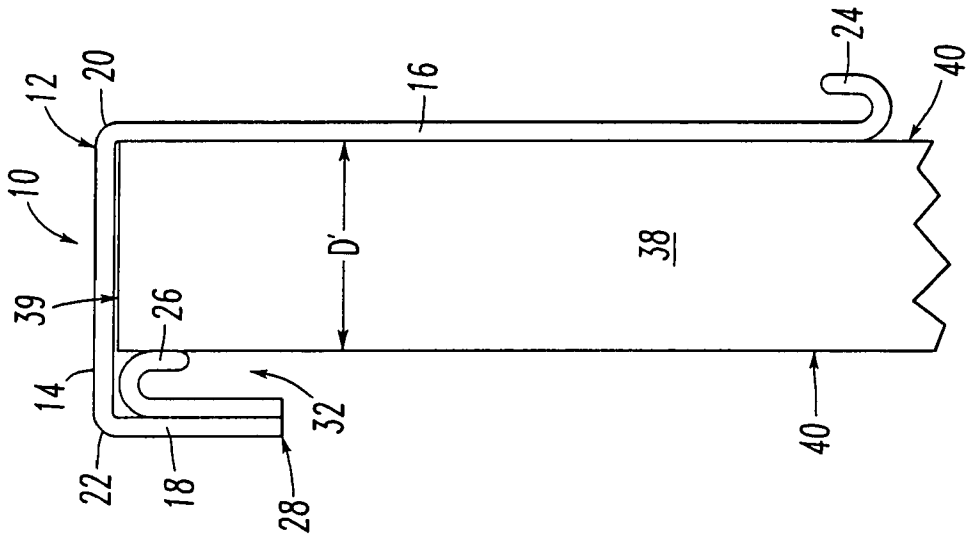

FIG. 3

SEP 17 2007

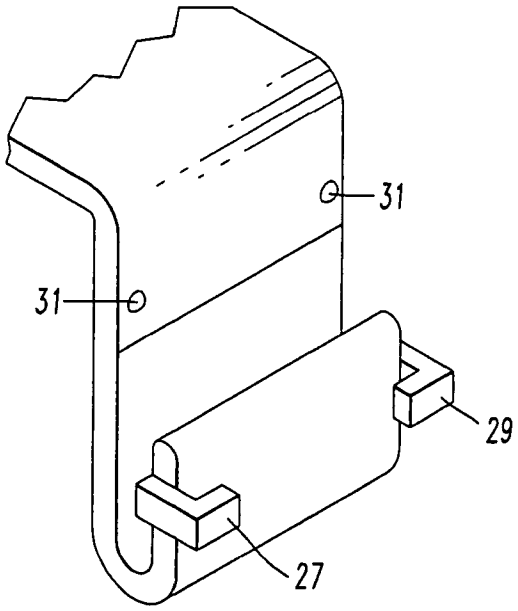

FIG.5

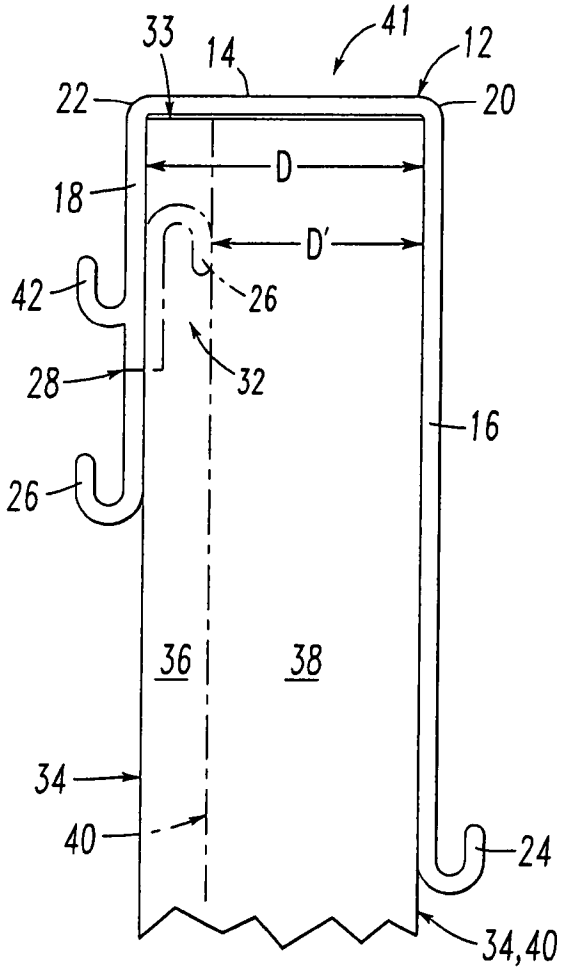

FIG.6

SEP 17 2007

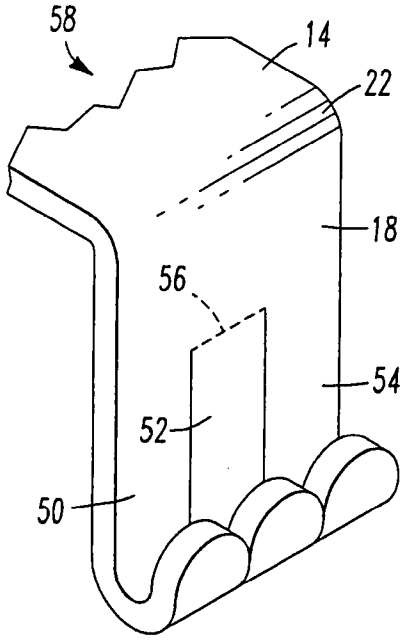

FIG. 7

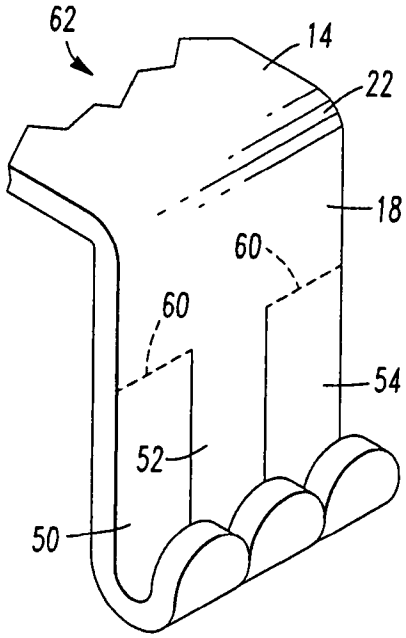

FIG. 8

SEP 17 2007

5/6

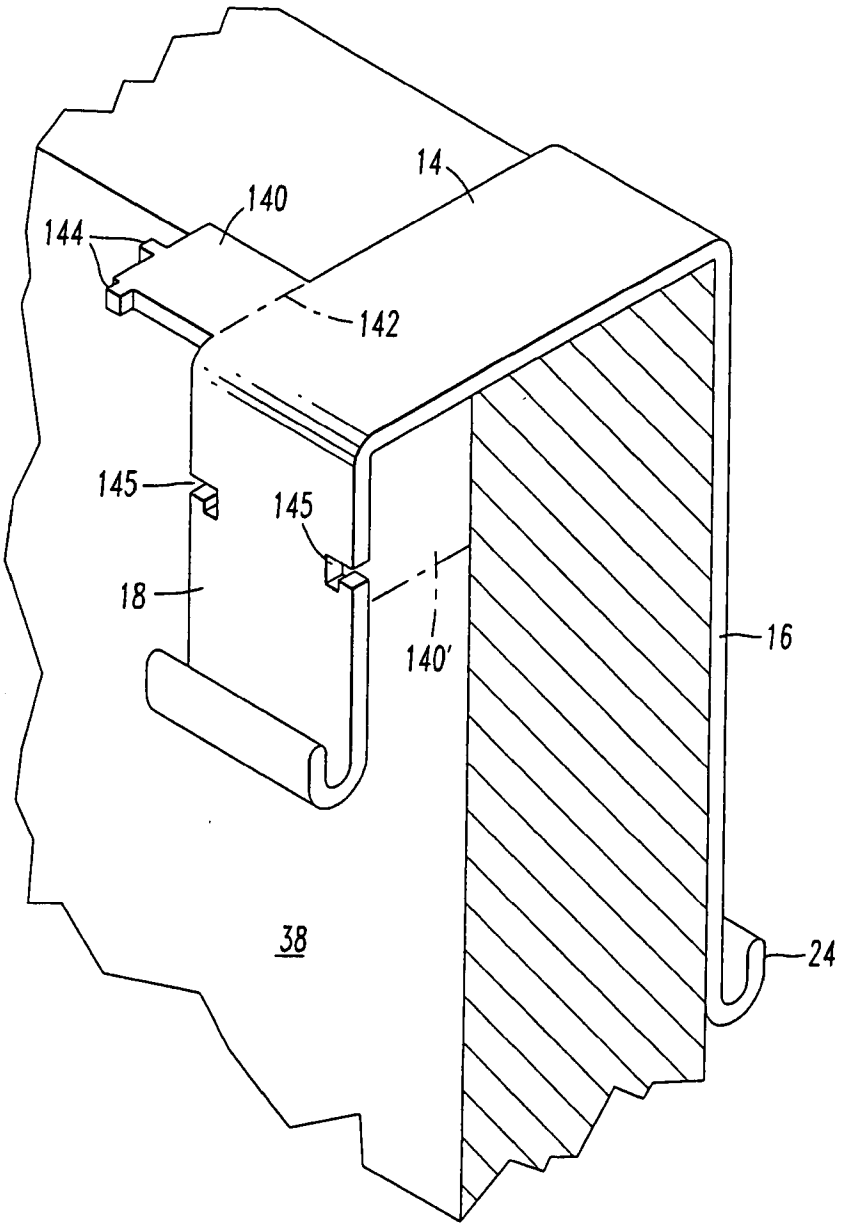

FIG. 9

SEP 17 2007

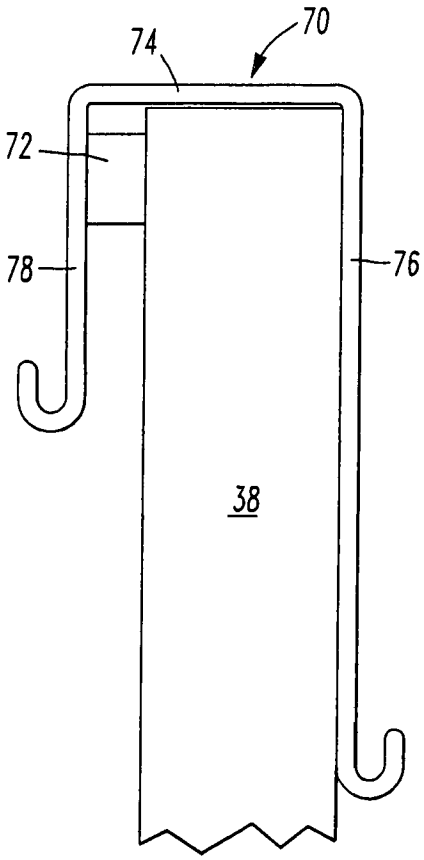

FIG. 10

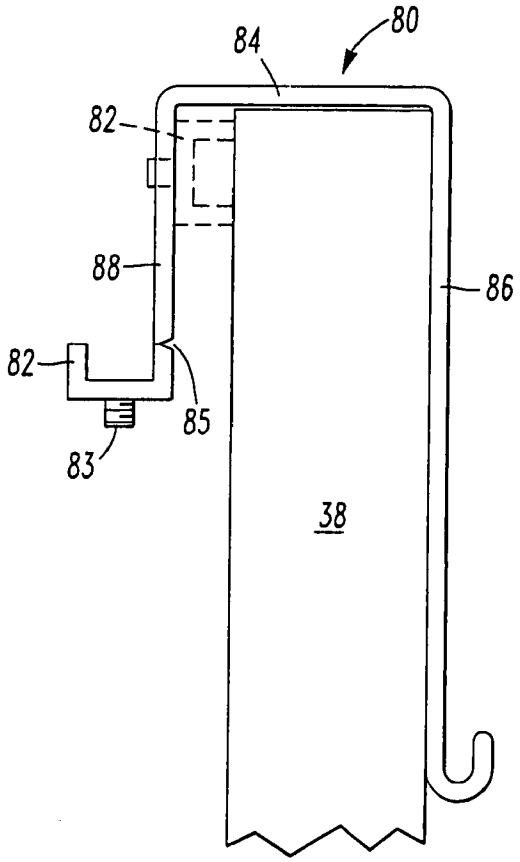

FIG. 12

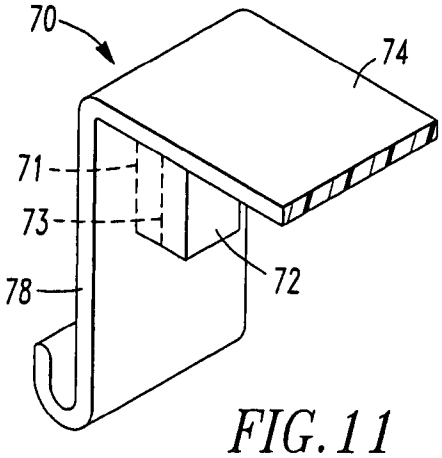

FIG. 11

SEP 17 2007

UNITED STATES PATENT AND TRADEMARK OFFICE

Commissioner for Patents
United States Patent and Trademark Office
P.O. Box 1450
Alexandria, VA 22313-1450
www.uspto.gov

BROSEMER, KOLEFAS & ASSOCIATES, LLC - (LUCENT)
1 BETHANY ROAD
BUILDING 4 - SUITE # 58
HAZLET NJ 07730

COPY MAILED

MAR 0 7 2008

OFFICE OF PETITIONS

In re Application of	:	
Liu et al.	:	
Application No. 10/790,434	:	DECISION ON PETITION
Filed: February 27, 2004	:	
Attorney Docket No. LIU-27-5-18	:	

This is a decision on the petition under the unintentional provisions of 37 CFR 1.137(b), filed January 30, 2008, to revive the above-identified application.

The petition is **GRANTED**.

The petition satisfies the requirements of 37 CFR 1.137(b) in that petitioner has supplied (1) the reply in the form of an Election, (2) the petition fee, and (3) a proper statement of unintentional delay.

It is not apparent whether the statement of unintentional delay was signed by a person who would have been in a position of knowing that the entire delay in filing the required reply from the due date for the reply until the filing of a grantable petition pursuant to 37 CFR 1.137(b) was unintentional. Nevertheless, in accordance with 37 CFR 10.18, the statement is accepted as constituting a certification of unintentional delay. However, in the event that petitioner has no knowledge that the delay was unintentional, petitioner must make such an inquiry to ascertain that, in fact, the delay was unintentional. If petitioner discovers that the delay was intentional, petitioner must notify the Office.

Telephone inquiries concerning this decision should be directed to the undersigned at (571) 272-3206.

This matter is being referred to Technology Center 2613 for further examination on the merits.

Liana Walsh
Petitions Examiner
Office of Petitions

UNITED STATES PATENT AND TRADEMARK OFFICE

Commissioner for Patents
United States Patent and Trademark Office
P.O. Box 1450
Alexandria, VA 22313-1450
www.uspto.gov

DAVOOD KHALILI
P.O. BOX 743
SANTA CLARA CA 95052

COPY MAILED

MAY 10 2007

OFFICE OF PETITIONS

In re Application of	:	ON PETITION
Khalili, Davood	:	
Application No. 10/790,437	:	
Filed: February 23, 2004	:	
Title: LASER POINTER	:	

This is a decision on the petition under 37 C.F.R. § 1.137(b), filed March 19, 2007, to revive the above-identified application.

The petition is **DISMISSED**.

Any request for reconsideration must be submitted within TWO (2) MONTHS from the mail date of this decision. No further petition fee is required for the request. Extensions of time under 37 CFR 1.136(a) are permitted. The reconsideration request should include a cover letter entitled "Renewed Petition under 37 CFR 1.137(b)." This is **not** a final agency action within the meaning of 5 U.S.C. § 704.

This application became abandoned for failure to timely reply to the non-final Office action mailed September 12, 2005. No extensions of time under the provisions of 37 CFR 1.136(a) were obtained. Accordingly, this application became abandoned on December 13, 2005. A Notice of Abandonment was mailed May 4, 2006.

A grantable petition under 37 CFR 1.137(b) must be accompanied by:
(1) the required reply,[1]
(2) the petition fee,
(3) a statement that the entire delay in filing the required reply from the due date for the reply until the filing of a grantable petition pursuant to 37 CFR 1.137(b) was unintentional, and
(4) a terminal disclaimer and fee if the application was filed on or before June 8, 1995 or if the application is a design application.

Where there is a question as to whether either the abandonment or the delay in filing a petition under 37 CFR 1.137 was unintentional, the Commissioner may require additional information.[2]

---

[1] In a nonprovisional application abandoned for failure to prosecute, the required reply may be met by the filing of a continuing application. In an application or patent, abandoned or lapsed for failure to pay the issue fee or any portion thereof, the required reply must be the payment of the issue fee or any outstanding balance thereof.

[2] See MPEP 711.03(c)(III)(C) and (D).

The instant petition lacks item (1). Petitioner has not submitted a proper reply to the Office action mailed September 12, 2005. In order to be entitled to reconsideration or further examination, the applicant or patent owner must reply to the Office action. The reply by the applicant or patent owner must be reduced to a writing which distinctly and specifically points out the supposed errors in the examiner's action and must reply to every ground of objection and rejection in the prior Office action. The reply must present arguments pointing out the specific distinctions believed to render the claims, including any newly presented claims, patentable over any applied references. If the reply is with respect to an application, a request may be made that objections or requirements as to form not necessary to further consideration of the claims be held in abeyance until allowable subject matter is indicated. The applicant's or patent owner's reply must appear throughout to be a bona fide attempt to advance the application or the reexamination proceeding to final action. A general allegation that the claims define a patentable invention without specifically pointing out how the language of the claims patentably distinguishes them from the references does not comply with the requirements. In amending in reply to a rejection of claims in an application or patent under reexamination, the applicant or patent owner must clearly point out the patentable novelty, which he or she thinks the claims present in view of the state of the art disclosed by the references cited or the objections made. The applicant or patent owner must also show how the amendments avoid such references or objections. *See MPEP 1.111(b) and (c).*

Further correspondence with respect to this matter should be addressed as follows:

By mail: Mail Stop PETITIONS
Commissioner for Patents
Post Office Box 1450
Alexandria, VA 22313-1450

By hand: Customer Window located at:

U.S. Patent and Trademark Office
Customer Service Window Randolph Building
401 Dulany Street
Alexandria, VA 22314

By fax: (571) 273-8300
ATTN: Office of Petitions

Any questions concerning this matter may be directed to the undersigned at (571) 272-3206.

Liana Walsh
Petitions Examiner
Office of Petitions

UNITED STATES PATENT AND TRADEMARK OFFICE

Commissioner for Patents
United States Patent and Trademark Office
P.O. Box 1450
Alexandria, VA 22313-1450
www.uspto.gov

DAVOOD KHALILI
P.O. BOX 743
SANTA CLARA CA 95052

COPY MAILED

MAR 2 0 2009

OFFICE OF PETITIONS

In re Application of
Khalili, Davood
Application No. 10/790,437
Filed: February 23, 2004
Title: Laser Pointer

ON PETITION

This is a decision on the renewed petition under 37 C.F.R. § 1.137(b), filed November 25, 2008, to revive the above-identified application.

The petition is **DISMISSED**.

Any request for reconsideration must be submitted within TWO (2) MONTHS from the mail date of this decision. No further petition fee is required for the request. Extensions of time under 37 CFR 1.136(a) are permitted. The reconsideration request should include a cover letter entitled "Renewed Petition under 37 CFR 1.137(b)." This is **not** a final agency action within the meaning of 5 U.S.C. § 704.

A grantable petition under 37 CFR 1.137(b) must be accompanied by:
(1) the required reply,[1]
(2) the petition fee,
(3) a statement that the entire delay in filing the required reply from the due date for the reply until the filing of a grantable petition pursuant to 37 CFR 1.137(b) was unintentional, and
(4) a terminal disclaimer and fee if the application was filed on or before June 8, 1995 or if the application is a design application.

Where there is a question as to whether either the abandonment or the delay in filing a petition under 37 CFR 1.137 was unintentional, the Commissioner may require additional information.[2]

The instant petition continues to lack item (1) and now also lacks item (3).

As to item (1), petitioner has still not provided a proper response to the Office action of September 2005. As stated in the previous petition decision, in order to be entitled to reconsideration or further examination, the applicant or patent owner must reply to the Office action. The reply by the applicant or patent owner must be reduced to a writing which distinctly and specifically points out the supposed errors in the examiner's action and must reply to every ground of objection and rejection in the prior Office action. The reply must present arguments pointing out the specific distinctions believed to render the claims, including any newly presented claims, patentable over any applied references. If the reply is with respect to an application, a request may be made that objections or requirements as to form not necessary to further consideration of the claims be held in abeyance until allowable subject matter is indicated. The

[1] In a nonprovisional application abandoned for failure to prosecute, the required reply may be met by the filing of a continuing application. In an application or patent, abandoned or lapsed for failure to pay the issue fee or any portion thereof, the required reply must be the payment of the issue fee or any outstanding balance thereof.

[2] See MPEP 711.03(c)(III)(C) and (D).

applicant's or patent owner's reply must appear throughout to be a bona fide attempt to advance the application or the reexamination proceeding to final action. A general allegation that the claims define a patentable invention without specifically pointing out how the language of the claims patentably distinguishes them from the references does not comply with the requirements. In amending in reply to a rejection of claims in an application or patent under reexamination, the applicant or patent owner must clearly point out the patentable novelty, which he or she thinks the claims present in view of the state of the art disclosed by the references cited or the objections made. The applicant or patent owner must also show how the amendments avoid such references or objections. *See MPEP 1.111(b) and (c).*

As to item (3), there are three periods to be considered during the evaluation of a petition under 37 CFR 1.137(b):

(1) the delay in reply that originally resulted in the abandonment;
(2) the delay in filing an initial petition pursuant to 37 CFR 1.137(b) to revive the application; and
(3) the delay in filing a grantable petition pursuant to 37 CFR 1.137(b) to revive the application.

Currently, the delay has not been shown to the satisfaction of the Director to be unintentional for period (3). The previous petition decision mailed May 10, 2007 gave a two month time period for reply, with extensions of time permitted under 37 CFR 1.136(a). However, the renewed petition was not filed until November 25, 2008, over a year later. Any future petition must explain the delay in filing the renewed petition.

Further, petitioner requests the return of the $750.00 petition fee submitted on March 19, 2007. The relief requested in this petition cannot be granted because 35 U.S.C. 41(a)(7) provides that a petition for the revival of an unintentionally abandoned application must be accompanied by a petition fee, unless the petition is filed under 35 U.S. C 133 or 151 on the basis of unavoidable delay. Thus, the payment of a petition fee to obtain the revival of an abandoned application is a statutory prerequisite to revival of the abandoned application, and cannot be refunded.

Further correspondence with respect to this matter should be addressed as follows:

By mail:	Mail Stop PETITIONS Commissioner for Patents Post Office Box 1450 Alexandria, VA 22313-1450
By hand:	Customer Window located at: U.S. Patent and Trademark Office Customer Service Window Randolph Building 401 Dulany Street Alexandria, VA 22314
By fax:	(571) 273-8300 ATTN: Office of Petitions

Any questions concerning this matter may be directed to the undersigned at (571) 272-3206.

Liana Walsh
Petitions Examiner
Office of Petitions

UNITED STATES PATENT AND TRADEMARK OFFICE

Commissioner for Patents
United States Patent and Trademark Office
P.O. Box 1450
Alexandria, VA 22313-1450
www.uspto.gov

JOSEPH S. FARZAM
SUITE 1770
1875 CENTURY PARK EAST
LOS ANGELES CA 90067

COPY MAILED

AUG 17 2005

OFFICE OF PETITIONS

In re Application of :
Linda Phillips :
Application No. 10/790,445 : DECISION GRANTING PETITION
Filed: March 2, 2004 : UNDER 37 CFR 1.137(b)
Attorney Docket No. None :

This is a decision on the petition under 37 CFR 1.137(b), filed May 23, 2005 and supplemented on June 7, 2005, to revive the above-identified application.

The petition is **GRANTED**.

The above-identified application became abandoned for failure to reply in a timely manner to the Notice To File Corrected Application Papers mailed May 21, 2004, which set a period for reply of two (2) months. No extensions of time under the provisions of 37 CFR 1.136(a) were obtained. Accordingly, the above-identified application became abandoned on July 22, 2004.

Telephone inquiries concerning this decision should be directed to the undersigned at (571) 272-3208.

This matter is being referred to the Office of Initial Patent Examination.

Karen Creasy

Karen Creasy
Petitions Examiner
Office of Petitions
Office of the Deputy Commissioner
for Patent Examination Policy

UNITED STATES PATENT AND TRADEMARK OFFICE

Commissioner for Patents
United States Patent and Trademark Office
P.O. Box 1450
Alexandria, VA 22313-1450
www.uspto.gov

PAUL H. JOHNSON
100 WEST FIFTH STREET, 10TH FLOOR
TULSA, OK 74103-4217

COPY MAILED

JAN 19 2005

OFFICE OF PETITIONS

In re Application of :
Rick D. Pruett :
Application No. 10/790,454 : NOTICE
Filed: March 1, 2004 :
Attorney Docket No. 005803.00981

This is a notice regarding your request for acceptance of a fee deficiency submission under 37 CFR 1.28. On September 1, 1998, the Court of Appeals for the Federal Circuit held that 37 CFR 1.28(c) is the sole provision governing the time for correction of the erroneous payment of the issue fee as a small entity. **See DH Technology v. Synergystex International, Inc. 154 F.3d 1333, 47 USPQ2d 1865 (Fed. Cir. Sept. 1, 1998).**

The Office no longer investigates or rejects original or reissue applications under 37 CFR 1.56. **1098 Off. Gaz. Pat. Office 502 (January 3, 1989).** Therefore, nothing in this Notice is intended to imply that an investigation was done.

Your fee deficiency submission under 37 CFR 1.28 is hereby **ACCEPTED**.

Inquiries related to this communication should be directed to Irvin Dingle at (571) 272-3210.

Irvin Dingle
Petitions Examiner
Office of Petitions
Office of the Deputy Commissioner
for Patent Examination Policy

UNITED STATES PATENT AND TRADEMARK OFFICE

UNITED STATES DEPARTMENT OF COMMERCE
United States Patent and Trademark Office
Address: COMMISSIONER FOR PATENTS
P.O. Box 1450
Alexandria, Virginia 22313-1450
www.uspto.gov

Edwin V. Merkel
Nixon Peabody LLP
1100 Clinton Square
Rochester, NY 14604

Mail Date: 05/21/2010

Applicant	: David S. Goldfarb	: DECISION ON REQUEST FOR
Patent Number	: 7618774	: RECALCULATION of PATENT
Issue Date	: 11/17/2009	: TERM ADJUSTMENT IN VIEW
Application No	: 10/790,456	: OF WYETH AND NOTICE OF INTENT TO
Filed	: 03/01/2004	: ISSUE CERTIFICATE OF CORRECTION
		:

The Request for Recalculation is **GRANTED** to the extent indicated.

The patent term adjustment has been determined to be **959** days. The USPTO will *sua sponte* issue a certificate of correction reflecting the amount of PTA days determined by the recalculation.

Prior to the issuance of the certificate of correction, the USPTO will afford patentee an opportunity to be heard and request reconsideration. Accordingly, patentee has **one month or thirty (30) days**, whichever is longer, to file a request for reconsideration of this patent term adjustment calculation. See 35 U.S.C. 154(b)(3)(B)(ii) and 37 CFR 1.322(a)(4). No extensions of time will be granted under 37 CFR 1.136.

Patentee should use document code PET.OP if electronically filing a request for reconsideration of this patent term adjustment calculation. The patentee must also include the information required by 37 CFR 1.705(b)(2) and the fee required by 37 CFR 1.18(e). If patentee does not file a timely request for reconsideration of this patent term adjustment calculation including the information required by 37 CFR 1.705(b)(2) and the fee required by 37 CFR 1.18(e), the USPTO will issue a certificate of correction reflecting the PTA determination noted above.

Patentee should be aware that in order to preserve the right to review in the United States District Court for the District of Columbia of the USPTO patent term adjustment determination, patentee must ensure that he or she also take the steps required under 35 U.S.C. 154(b)(4)(A) in a timely manner. Nothing in the request for recalculation should be construed as providing an alternative time frame for commencing a civil action under 35 U.S.C. 154(b)(4)(A).

Any questions concerning this decision should be directed to the Office of Patent Legal Administration at 571-272-7702.

UNITED STATES PATENT AND TRADEMARK OFFICE

UNITED STATES DEPARTMENT OF COMMERCE
United States Patent and Trademark Office
Address: COMMISSIONER FOR PATENTS
P.O. Box 1450
Alexandria, Virginia 22313-1450
www.uspto.gov

Allen, Dyer, Doppelt, Milbrath & Gilchrist - RIM
255 S. Orange Avenue
Suite 1401
Orlando, FL 32801

Mail Date: 04/21/2010

Applicant	: Darrell Reginald May	: DECISION ON REQUEST FOR
Patent Number	: 7650170	: RECALCULATION of PATENT
Issue Date	: 01/19/2010	: TERM ADJUSTMENT IN VIEW
Appliction No	: 10/790,479	: OF WYETH AND NOTICE OF INTENT TO
Filed	: 03/01/2004	: ISSUE CERTIFICATE OF CORRECTION
		:

The Request for Recalculation is **GRANTED** to the extent indicated.

The patent term adjustment has been determined to be **0** days. The USPTO will *sua sponte* issue a certificate of correction reflecting the amount of PTA days determined by the recalculation.

Prior to the issuance of the certificate of correction, the USPTO will afford patentee an opportunity to be heard and request reconsideration. Accordingly, patentee has **one month or thirty (30) days**, whichever is longer, to file a request for reconsideration of this patent term adjustment calculation. See 35 U.S.C. 154(b)(3)(B)(ii) and 37 CFR 1.322(a)(4). No extensions of time will be granted under 37 CFR 1.136.

Patentee should use document code PET.OP if electronically filing a request for reconsideration of this patent term adjustment calculation. The patentee must also include the information required by 37 CFR 1.705(b)(2) and the fee required by 37 CFR 1.18(e). If patentee does not file a timely request for reconsideration of this patent term adjustment calculation including the information required by 37 CFR 1.705(b)(2) and the fee required by 37 CFR 1.18(e), the USPTO will issue a certificate of correction reflecting the PTA determination noted above.

Patentee should be aware that in order to preserve the right to review in the United States District Court for the District of Columbia of the USPTO patent term adjustment determination, patentee must ensure that he or she also take the steps required under 35 U.S.C. 154(b)(4)(A) in a timely manner. Nothing in the request for recalculation should be construed as providing an alternative time frame for commencing a civil action under 35 U.S.C. 154(b)(4)(A).

Any questions concerning this decision should be directed to the Office of Patent Legal Administration at 571-272-7702.

UNITED STATES PATENT AND TRADEMARK OFFICE

UNITED STATES DEPARTMENT OF COMMERCE
United States Patent and Trademark Office
Address: COMMISSIONER FOR PATENTS
P.O. Box 1450
Alexandria, Virginia 22313-1450
www.uspto.gov

Allen, Dyer, Doppelt, Milbrath & Gilchrist - RIM
255 S. Orange Avenue
Suite 1401
Orlando, FL 32801

Mail Date: 05/17/2010

Applicant : Darrell Reginald May
Patent Number : 7650170
Issue Date : 01/19/2010
Application No: 10/790,479
Filed : 03/01/2004

: NOTICE CONCERNING IMPROPER
: CALCULATION OF PATENT TERM
: ADJUSTMENT BASED UPON USPTO
: IMPROPERLY MEASURING REDUCTION
: PERIOD UNDER 37 CFR 1.704(c)(10).

The United States Patent and Trademark Office (USPTO) discovered that in processing the recent recalculation decisions mailed in response to patentee's filed Request for Recalculation of Patent Term Adjustment in view of Wyeth, the USPTO improperly measured the reduction period for reductions under 37 CFR 1.704(c)(10). Pursuant to 37 CFR 1.704(c)(10), patentee's reduction begins on the date of filing the amendment under 37 CFR 1.312 ("1.312 amendment") or other related paper and ends on the date that the Office mails a response to the filing of the 1.312 amendment or other paper. It has been discovered that during the recalculation, the calculation failed to the limit the reduction to the mail date of the response to the 1.312 amendment or other paper. Accordingly, patentee's reductions were greater than warranted.

This notice **VACATES** the previous GRANTED request for recalculation and provides patentee with a revised GRANTED recalculation.

The patent term adjustment has been determined to be **9** days. The USPTO will *sua sponte* issue a certificate of correction reflecting the amount of patent term adjustment (PTA) days determined by the recalculation.

Prior to the issuance of the certificate of correction, the USPTO will afford patentee an opportunity to be heard and request reconsideration. Accordingly, patentee has **one month or thirty (30) days** from the mail date of this notice, whichever is longer, to file a request for reconsideration of this PTA calculation. See 35 U.S.C. § 154(b)(3)(B)(ii) and 37 CFR 1.322(a)(4).

Patentee should use document code PET.OP if electronically filing a request for reconsideration of this PTA calculation. The patentee must also include the information required by 37 CFR 1.705(b)(2), and the fee required by 37 CFR 1.18(e). If patentee does not file a timely request for reconsideration of this PTA calculation, including the information required by 37 CFR 1.705(b)(2) and the fee required by 37 CFR 1.18(e), the USPTO will issue a certificate of correction reflecting the PTA determination noted above.

Patentee should be aware that in order to preserve the right of review of the USPTO's PTA determination in the United States District Court for the District of Columbia, patentee must ensure that the steps required under 35 U.S.C. § 154 (b)(4) are taken in a timely manner. Nothing in the request for recalculation should be construed as providing an alternative time frame for commencing a civil action under 35 U.S.C. § 154(b)(4).

SPE RESPONSE FOR CERTIFICATE OF CORRECTION

Paper No.: _____

DATE : 10/15/08

TO SPE OF : ART UNIT 1626

SUBJECT : Request for Certificate of Correction for Appl. No.: 10790498 Patent No.: 7393842 B2

Please respond to this request for a certificate of correction within 7 days.

FOR IFW FILES:

Please review the requested changes/corrections as shown in the **COCIN** document(s) in the IFW application image. No new matter should be introduced, nor should the scope or meaning of the claims be changed.

Please complete the response (see below) and forward the completed response to scanning using document code **COCX**.

FOR PAPER FILES:

Please review the requested changes/corrections as shown in the attached certificate of correction. Please complete this form (see below) and forward it with the file to:

Certificates of Correction Branch (CofC)
South Tower - 9A22
Palm Location 7580

Lamonte M. Newsome
Certificates of Correction Branch
703-308-9390 ext. 112

Thank You For Your Assistance

The request for issuing the above-identified correction(s) is hereby:
Note your decision on the appropriate box.

- ☒ **Approved** — **All** changes apply.
- ☐ **Approved in Part** — Specify below which changes **do not** apply.
- ☐ **Denied** — State the reasons for denial below.

Comments: _____

JOSEPH K. McKANE
SUPERVISORY PATENT EXAMINER
TECHNOLOGY CENTER 1600

SPE **Art Unit** 1626

UNITED STATES PATENT AND TRADEMARK OFFICE

COMMISSIONER FOR PATENTS
UNITED STATES PATENT AND TRADEMARK OFFICE
P.O. BOX 1450
ALEXANDRIA, VA 22313-1450
www.uspto.gov

Paper No.

John S. Egbert
Harrison & Egbert
7th Floor
412 Main Street
Houston TX 77002

COPY MAILED

DEC 11 2006

OFFICE OF PETITIONS

In re Application of	:	
Kuo et al.	:	DECISION ON PETITION
Application No. 10/790,508	:	
Filed: March 1, 2004	:	
Attorney Docket No. 1970-10	:	

This is in response to the PETITION TO WITHDRAW HOLDING OF ABANDONMENT and the PETITION FOR REVIVAL OF AN APPLICATION FOR PATENT ABANDONED UNINTENTIONALLY UNDER 37 CFR 1.137(b) filed November 1, 2006 (and resubmitted November 15, 2006).

The petition to withdraw holding of abandonment under 37 CFR § 1.181 is **DISMISSED**.

The petition under 37 CFR § 1.137(b) is **GRANTED**.

The above-identified application became abandoned for failure to timely file a reply to the non-final Office action mailed July 25, 2005. This Office action set a three-month shortened statutory period for reply, with extensions of time obtainable under § 1.136(a). No reply having been received in the Office and no extension of time obtained, the above-identified application became abandoned on October 26, 2005. A Notice of Abandonment was mailed on September 15, 2006.

In response, petitioner filed the instant petition, asserting that the Office action was not received. In the alternative, petitioner maintained that the failure to respond to the Office action was unintentional.

There is a strong presumption that the correspondence was properly mailed to the applicant at the correspondence address of record. In the absence of demonstrated irregularities in mailing of this Notice, petitioner must submit evidence to overcome this presumption. A review of the record reveals no irregularities in the mailing of the Office action. The showing required to establish non-receipt of an Office communication must include a statement from the practitioner stating that the Office communication was not received by the practitioner and attesting to the fact that a search of the file jacket and docket records indicates that the Office communication was not received. In addition, a copy of the docket record where the non-received Office communication would have been entered had it been received and docketed must be attached to and referenced in practitioner's statement.

Petitioner's arguments and evidence have been considered, and it is concluded that petitioner has not made an adequate showing of non-receipt. The attorney for applicant attests that a search of the file and docketing records indicates that the Office action was not received. In support of this statement, petitioner has submitted docket records. However, a review of the docket records reveals that they do no show where the Office action would have been docketed had it been received. The Office action was mailed July 25, 2005 with a three-month shortened statutory period for reply. However, applicants submitted records for August 27, 2006, September 24, 2006, September 25, 2006, October 23, 2006, and October 29, 2006, all dates more than a year after the mailing of the Office action and outside of the maximum extendable period for reply. In view thereof, the petition to withdraw the holding of abandonment based on non-receipt must be dismissed.

Nonetheless, the petition to revive the application is grantable. The petition includes the required reply, the required statement of unintentional delay and payment of the petition fee set forth in 37 CFR § 1.17(m). No terminal disclaimer is required.

Technology Center AU 3762 has been advised of this decision. The application is, thereby, forwarded to the examiner for consideration of the reply submitted on petition filed November 1, 2006.

Telephone inquiries concerning this decision should be directed to the undersigned at (571) 272-3219.

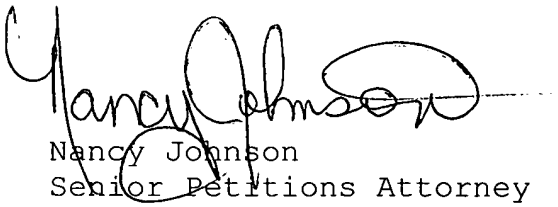

Nancy Johnson
Senior Petitions Attorney
Office of Petitions

UNITED STATES PATENT AND TRADEMARK OFFICE

COMMISSIONER FOR PATENTS
UNITED STATES PATENT AND TRADEMARK OFFICE
P.O. BOX 1450
ALEXANDRIA, VA 22313-1450
www.uspto.gov

Paper No.

John S. Egbert
Harrison & Egbert
7th Floor
412 Main Street
Houston TX 77002

COPY MAILED

JAN 25 2007

OFFICE OF PETITIONS

In re Application of	:	
Kuo et al.	:	DECISION ON PETITION
Application No. 10/790,508	:	
Filed: March 1, 2004	:	
Attorney Docket No. 1970-10	:	

This is in response to the RENEWED PETITION FOR WITHDRAWAL OF A HOLDING OF ABANDONMENT UNDER 37 C.F.R. § 1.181(a) filed December 21, 2006.

The renewed petition to withdraw holding of abandonment under 37 CFR § 1.181 is **DISMISSED AS MOOT**.

The above-identified application became abandoned effective October 26, 2005 for failure to timely file a reply to the non-final Office action mailed July 25, 2005. A Notice of Abandonment was mailed on September 15, 2006. On November 1, 2006, applicants filed a PETITION TO WITHDRAW HOLDING OF ABANDONMENT and, in the alternative, a PETITION FOR REVIVAL OF AN APPLICATION FOR PATENT ABANDONED UNINTENTIONALLY UNDER 37 CFR 1.137(b). By decision mailed December 11, 2006, the petition to withdraw the holding of abandonment was dismissed. However, the petition to revive the application was granted. Accordingly, the issue of abandonment of this application is now moot.

Technology Center AU 3762 has been advised of this decision. The application is again, thereby, forwarded to the examiner for consideration of the reply submitted on petition filed November 1, 2006.

Telephone inquiries concerning this decision should be directed to the undersigned at (571) 272-3219.

Nancy Johnson
Senior Petitions Attorney
Office of Petitions

UNITED STATES PATENT AND TRADEMARK OFFICE

Commissioner for Patents
United States Patent and Trademark Office
P.O. Box 1450
Alexandria, VA 22313-1450
www.uspto.gov

Date :March 14, 2007

Patent No. :7,120,402
Inventor(s) :Sumit A. Talwalkar et al
Issued :October 10, 2006
Title :METHOD AND APPARATUS FOR A HIGH PERFORMANCE AND HIGH :DYNAMIC RANGE BASEB AND POWER CONTROL SYSTEM
Docket No. :MTRL022USO

Re: Request for Certificate of Correction

Consideration has been given your request for the issuance of a certificate of correction for the above-identified patent under the provisions of 37 CFR 1.322 and/or 1.323.

Assignees' names and addresses (assignment data) printed in a patent are based *solely* on information supplied in the appropriate space for identifying the assignment data, i.e., item 3 of the Fee(s) Transmittal Form PTOL-85B. After payment of the issue fee, correction of assignment data submitted on the PTOL-85B can only be done by Certificate of Correction under 37 CFR 1.323, with a request under 37 CFR 3.81(b).

A request for a patent to be corrected to state the name of the assignee must:

A. state that the assignment was submitted for recordation as set forth in 37 CFR 3.11 before issuance of the patent;
B. include a request for a certificate of correction under 37 CFR 1.323 along with the fee set forth in 37 CFR 1.20(a); and
C. include the processing fee set forth in 37 CFR 1.17(i).

If the request is granted, Certificates of Correction Branch will be notified that a Certificate of Correction may be issued.

See Manual of Patent Examining Procedure, Section 1481.01 (Rev. 3) (Oct. 2005).

Applicant has not included items A and or C above, accordingly, the request for Certificate of Correction to add or change the assignee data is dismissed.

Any request under 37 CFR 3.81(b) should be directed to the following address or facsimile number:

By mail: Mail Stop PETITIONS
Commissioner for Patents
Post Office Box 1450
Alexandria, VA 22313-1450

By hand: Customer Service Window
Mail Stop Petitions
Randolph Building
401 Dulany Street
Alexandria, VA 22314

By fax: 571-273-8300
ATTN: Office of Petitions

If a fee (currently $100) was previously submitted for consideration of a Request for Certificate of Correction, under CFR 1.323, to correct assignment data, no additional fee is required.

Any inquiry concerning this communication should be directed to Ms. A. Green at (703) 308-9380 ext. 123.

For Cecelia Newman
Decisions & Certificates
of Correction Branch
(703) 308-9390 or (703) 308- 9380 ext. 123

John A. Fortkort
Fortkort & Houston, P.C.
9442 N. Capital of Texas Highway
Arboretum Plaza One, Suite 500
Austin, TX 78759

CBN/arg

UNITED STATES PATENT AND TRADEMARK OFFICE

Commissioner for Patents
United States Patent and Trademark Office
P.O. Box 1450
Alexandria, VA 22313-1450
www.uspto.gov

LEYDIG VOIT & MAYER, LTD
TWO PRUDENTIAL PLAZA, SUITE 4900
180 NORTH STETSON AVENUE
CHICAGO, IL 60601-6731

MAILED

MAY 1 3 2009

OFFICE OF PETITIONS

In re Application of :
Gus Alexander, et al. :
Application No. 10/790,527 : ON PETITION
Filed: March 1, 2004 :
Attorney Docket No. 226256 :

This is a decision in response to the petition, filed June 25, 2007, to revive the above-identified application under the provisions of 37 CFR 1.137(b). The delay in responding is regretted; however, the petition was recently referred to the Office of Petitions for consideration.

The petition is **GRANTED**.

The application became abandoned for failure to reply in a timely manner to the non-final Office action mailed, December 1, 2006, which set a shortened statutory period for reply of three (3) months. No extension of time under the provisions of 37 CFR 1.136(a) was obtained. Accordingly, the application became abandoned on March 2, 2007. A Notice of Abandonment was mailed on June 7, 2007. On June 25, 2007, the present petition was filed.

The petition satisfies the requirements of 37 CFR 1.137(b) in that petitioner has supplied (1) the reply in the form of amendment; (2) the petition fee of $750; and (3) an adequate statement of unintentional delay.

This application is being referred to Technology Center AU 1746 for appropriate action by the Examiner in the normal course of business on the reply received June 25, 2007.

Telephone inquiries concerning this decision should be directed to the undersigned at (571) 272-3204. Inquiries relating to further prosecution should be directed to the Technology Center.

Sherry D. Brinkley
Petitions Examiner
Office of Petitions

UNITED STATES PATENT AND TRADEMARK OFFICE

Commissioner for Patents
United States Patent and Trademark Office
P.O. Box 1450
Alexandria, VA 22313-1450
www.uspto.gov

4-13-09

Patent No. : 7,455,828 B2
Ser. No. : 10/790,530
Inventor(s) : Richard R. Selinger, et. al.
Issued : November 25, 2008

Re: Request for Certificate of Correction

Consideration has been given your request for the issuance of a certificate of correction for the above-identified patent under the provisions of Rule(s) 1.322.

Assignees' names and addresses (assignment data) printed in a patent, are based *solely* on information supplied in the appropriate space for identifying the assignment data, i.e., item 3 of the Issue Fee Transmittal Form PTOL-85B. Granting of a request under 37 CFR 3.81(b) is required to correct applicant's error providing ***incorrect or erroneous*** assignment data, *before* issuance of a Certificate of Correction, under 37 CFR 1.323 *(see Manual of Patent Examining Procedures (M.P.E.P) Chp.1400, sect. 1481).* This procedure is required *at any time after the issue fee is paid*, including after issuance of the patent.

In view of the foregoing, your request is hereby denied.

A request to correct the Assignee under 37 CFR 3.81(b) should include:

A. **the processing fee set forth in 37 CFR 1.117(h) (currently $130);**
B. a statement that the failure to include the correct assignee name on the PTOL-85B was inadvertent; and
C. a copy of the Notice of Recordation of Assignment Document, reflecting the reel and frame number where the assignment(s) is recorded and/or reflecting proof of *the date* the assignment was submitted for recordation.

In the Request, Applicant(s) may request that the file be forwarded to Certificates of Correction Branch, for issuance of a Certificate of Correction, if the Request is granted.

Any request under 37 CFR 3.81(b) should be directed to the following address or facsimile number:

By mail: Mail Stop PETITIONS
Commissioner for Patents
Post Office Box 1450
Alexandria, VA 22313-1450

By hand: Customer Service Window
Mail Stop Petitions
Randolph Building
401 Dulany Street
Alexandria, VA 22314

By fax: (703) 872-9306
ATTN: Office of Petitions

If a fee (currently $100) was previously submitted for consideration of a Request for Certificate of Correction, under CFR 1.323, to correct assignment data, , no additional fee is required.

Eva James
For Mary Diggs
Decisions & Certificates
of Correction Branch
(703) **308-9390 ext. 124** or 125

Salim A. Hasan
Leydig, Voit & Mayer, Ltd.
Two Prudential Plaza, Suite 4900
180 North Stetson Avenue
Chicago, Illinois 60601-6731

UNITED STATES PATENT AND TRADEMARK OFFICE

Commissioner for Patents
United States Patent and Trademark Office
P.O. Box 1450
Alexandria, VA 22313-1450
www.uspto.gov

COPY MAILED

DEC 14 2009

OFFICE OF PETITIONS

LEYDIG VOIT & MAYER, LTD
TWO PRUDENTIAL PLAZA SUITE 4900
180 NORTH STETSON AVENUE
CHICAGO IL 60601-6731

In re Patent No. 7,455,828	:	
Issue Date: November 25, 2008	:	
Application No. 10/790,530	:	DECISION ON PETITION
Filed: March 1, 2004	:	
Attorney Docket No. 227745	:	

This is a decision on the "REQUEST TO CORRECT THE ASSIGNEE UNDER 37 CFR 3.81(b)", filed June 30, 2009.

The petition is **GRANTED**.

An application may issue in the name of an assignee rather than the applicant if requested prior to issuance of a patent.[1] However, in the event the request is not made prior to issuance, a Certificate of Correction under 37 CFR 1.323 may be requested. A request for a Certificate of Correction under 37 CFR 1.323 to correct the assignee's name will not be granted unless a petition under 37 CFR 3.81(b) is granted. Such request under 37 CFR 3.81(b) should include:

(A) the processing fee required by 37 CFR 1.17(i);

(B) a request for issuance of the application in the name of the assignee, or a request that a patent be corrected to state the name of the assignee;

---

[1] See 37 CFR 3.81.

(C) a statement that the assignment was submitted for recordation as set forth in 37 CFR 3.11 before issuance of the patent; and

(D) a request for a certificate of correction under 37 CFR 1.323 accompanied by the fee set forth in 37 CFR 1.20(a).[2]

Receipt of the $130 processing fee set forth in 37 CFR 1.17(i) and the $100 fee for the Certificate of Correction set forth in 37 CFR 1.20(a), is acknowledged.

The file is being forwarded to the Certificate of Corrections Branch for issuance of the requested Certificate of Correction.

Telephone inquiries related to this decision should be directed to the undersigned at (571)272-3207.

Cliff Congo
Petitions Attorney
Office of Petitions

[2] MPEP 307.

UNITED STATES PATENT AND TRADEMARK OFFICE

Commissioner for Patents
United States Patent and Trademark Office
P.O. Box 1450
Alexandria, VA 22313-1450
www.uspto.gov

BUTZEL LONG
350 SOUTH MAIN STREET
SUITE 300
ANN ARBOR, MI 48104

COPY MAILED

JUN 3 0 2004

OFFICE OF PETITIONS

In re Application of :
Scott A. Hogan :
Application No. 10/790,539 : ON PETITION
Filed: March 1, 2004 :
Attorney Docket No.: 057888028-0063 :

This is a decision on the petition filed June 10, 2004, titled "Petition under 37 CFR 1.182 to Maintain Filing Date and Preliminary Amendment to Drawings" filed in response to the Notice of Omitted Item(s) in a Nonprovisional Application filed under 37 CFR 1.53(b). The instant petition will be treated as a petition to vacate the Notice of omitted Items in Nonprovisional Application.

The petition is **dismissed**.

On March 1, 2004, the above-identified application was filed. However, on May 20, 2004 the Office of Initial Patent Examination mailed a Notice to of Omitted Items in Nonprovisional Application, stating that application had been accorded a filing date of March 1, 2004, and advising applicant that Figures 5a and 5b as described in the specification appeared to have been omitted. The notice allowed a two-month period for reply.

In response, on June 10, 2004, applicant filed the present petition. Petitioner explains that Figures 5a-5b were omitted, but that petitioner desires to retain the current filing date with only those papers filed on March 1, 2004, as part of the original disclosure. Petitioner requests that Figures 5a and 5b filed on June 10, 2004, be considered as a preliminary amendment.

Because the specification describes Figures 5a and 5b and those figures were not found among the drawings, the Office of Initial Patent Examination correctly issued the Notice of Omitted Items in Nonprovisional Application and will not be vacated. The original disclosure of the application will consists of those papers received on March 1, 2004.

The application is being returned to the Office of Initial Patent Examination for further processing with a filing date of March 1, 2004.

Thereafter, the application will be forwarded to the appropriate group art unit for consideration by the examiner of Figures 5a and 5b filed as a preliminary amendment on June 10, 2004.

Telephone inquiries concerning this matter may be directed to the undersigned at (703) 305-0010.

Kenya A. McLaughlin

Kenya A. McLaughlin
Petitions Attorney
Office of Petitions

UNITED STATES PATENT AND TRADEMARK OFFICE

Commissioner for Patents
United States Patent and Trademark Office
P.O. Box 1450
Alexandria, VA 22313-1450
www.uspto.gov

STITES & HARBISON P.L.L.C.
1199 NORTH FAIRFAX STREET, SUITE 900
ALEXANDRIA, VA 22314

COPY MAILED

AUG 20 2008

In re Application of :
Joseph W. Hundley :
Application No. 10/790,545 : DECISION ON PETITION
Filed: March 1, 2004 :
Attorney Docket No. P09522US02/BAS :

This is a decision on the petition under the unintentional provisions of 37 CFR 1.137(b), filed July 3, 2008, to revive the above-identified application.

The petition is **GRANTED**.

The application became abandoned for failure to reply in a timely manner to the non-final Office action mailed April 5, 2007, which set a shortened statutory period for reply of three (3) months. No extensions of time under the provisions of 37 CFR 1.136(a) were obtained. Accordingly, the application became abandoned on July 6, 2007. A Notice of Abandonment was mailed October 31, 2007.

The petition satisfies the requirements of 37 CFR 1.137(b) in that petitioner has supplied (1) the reply in the form of an Amendment, (2) the petition fee of $770.00, and (3) an adequate statement of unintentional delay.

It is not apparent whether the statement of unintentional delay was signed by a person who would have been in a position of knowing that the **entire** delay in filing the required reply from the due date for the reply until the filing of a grantable petition pursuant to 37 CFR 1.137(b) was unintentional. Nevertheless, in accordance with 37 CFR 10.18, the statement is accepted as constituting a certification of unintentional delay. However, in the event that petitioner has no knowledge that the delay was unintentional, petitioner must make such an inquiry to ascertain that, in fact, the delay was unintentional. If petitioner discovers that the delay was intentional, petitioner must notify the Office.

Telephone inquiries concerning this decision should be directed to Joan Olszewski at (571) 272-7751.

This application is being referred to Technology Center AU 1797 for appropriate action by the Examiner in the normal course of business on the reply received.

Liana Walsh
Petitions Examiner
Office of Petitions

UNITED STATES PATENT AND TRADEMARK OFFICE

UNITED STATES DEPARTMENT OF COMMERCE
United States Patent and Trademark Office
Address: COMMISSIONER FOR PATENTS
P.O. Box 1450
Alexandria, Virginia 22313-1450
www.uspto.gov

STITES & HARBISON PLLC
1199 NORTH FAIRFAX STREET
SUITE 900
ALEXANDRIA, VA 22314

Mail Date: 04/21/2010

Applicant	: Joseph W. Hundley	: DECISION ON REQUEST FOR
Patent Number	: 7651541	: RECALCULATION of PATENT
Issue Date	: 01/26/2010	: TERM ADJUSTMENT IN VIEW
Appliction No	: 10/790,545	: OF WYETH AND NOTICE OF INTENT TO
Filed	: 03/01/2004	: ISSUE CERTIFICATE OF CORRECTION
		:

The Request for Recalculation is **GRANTED** to the extent indicated.

The patent term adjustment has been determined to be **1519** days. The USPTO will *sua sponte* issue a certificate of correction reflecting the amount of PTA days determined by the recalculation.

Prior to the issuance of the certificate of correction, the USPTO will afford patentee an opportunity to be heard and request reconsideration. Accordingly, patentee has **one month or thirty (30) days**, whichever is longer, to file a request for reconsideration of this patent term adjustment calculation. See 35 U.S.C. 154(b)(3)(B)(ii) and 37 CFR 1.322(a)(4). No extensions of time will be granted under 37 CFR 1.136.

Patentee should use document code PET.OP if electronically filing a request for reconsideration of this patent term adjustment calculation. The patentee must also include the information required by 37 CFR 1.705(b)(2) and the fee required by 37 CFR 1.18(e). If patentee does not file a timely request for reconsideration of this patent term adjustment calculation including the information required by 37 CFR 1.705(b)(2) and the fee required by 37 CFR 1.18(e), the USPTO will issue a certificate of correction reflecting the PTA determination noted above.

Patentee should be aware that in order to preserve the right to review in the United States District Court for the District of Columbia of the USPTO patent term adjustment determination, patentee must ensure that he or she also take the steps required under 35 U.S.C. 154(b)(4)(A) in a timely manner. Nothing in the request for recalculation should be construed as providing an alternative time frame for commencing a civil action under 35 U.S.C. 154(b)(4)(A).

Any questions concerning this decision should be directed to the Office of Patent Legal Administration at 571-272-7702.

UNITED STATES PATENT AND TRADEMARK OFFICE

Commissioner for Patents
United States Patent and Trademark Office
P.O. Box 1450
Alexandria, VA 22313-1450
www.uspto.gov

MYERS BIGEL SIBLEY & SAJOVEC
PO BOX 37428
RALEIGH NC 27627

COPY MAILED

JUL 1 4 2004

OFFICE OF PETITIONS

In re Application of
Lee
Application No. 10/790,572
Filed: March 1, 2004
Attorney Docket No. 5649-1267
FOR: INTEGRATED CIRCUIT DEVICES INCLUDING AN INTAGLIO PATTERN AND METHODS FOR FABRICATING THE SAME

: DECISION DISMISSING
: PETITION AS MOOT

This is a decision on the petition under 37 CFR 1.10(c), filed June 7, 2004 (certificate of mailing date June 4, 2004), requesting that the above-identified application be accorded a filing date of March 1, 2004.

The original filing receipt, mailed May 21, 2004 incorrectly listed the application's filing date as March 2, 2004. On June 21, 2004, the Office of Initial Patent Examination corrected this error and mailed a corrected filing receipt listing the application's filing date as March 1, 2004. Office computer records all show this application's filing date as March 1, 2004.

The relief requested in the present petition has already been granted. Therefore, the petition is **dismissed as moot**. No petition fee has been or will be charged in connection with this matter.

The application is being forwarded to Technology Center 2800 for examination in due couse.

Any inquiries directly related to this decision should be directed to the undersigned at (703) 308-6712.

E. Shirene Willis
Senior Petitions Attorney
Office of Petitions
Office of the Deputy Commissioner
for Patent Examination Policy

UNITED STATES PATENT AND TRADEMARK OFFICE

UNITED STATES DEPARTMENT OF COMMERCE
United States Patent and Trademark Office
Address: COMMISSIONER FOR PATENTS
P.O. Box 1450
Alexandria, Virginia 22313-1450
www.uspto.gov

APPL NO.	FILING OR 371 (c) DATE	ART UNIT	FIL FEE REC'D	ATTY.DOCKET NO	DRAWINGS	TOT CLMS	IND CLMS
10/790,588	03/01/2004	2131	770	5577-282	4	20	3

CONFIRMATION NO. 9591

Myers Bigel Sibley & Sajovec
PO Box 37428
Raleigh, NC 27627

CORRECTED FILING RECEIPT

OC000000013507115

Date Mailed: 08/11/2004

Receipt is acknowledged of this regular Patent Application. It will be considered in its order and you will be notified as to the results of the examination. Be sure to provide the U.S. APPLICATION NUMBER, FILING DATE, NAME OF APPLICANT, and TITLE OF INVENTION when inquiring about this application. Fees transmitted by check or draft are subject to collection. Please verify the accuracy of the data presented on this receipt. **If an error is noted on this Filing Receipt, please write to the Office of Initial Patent Examination's Filing Receipt Corrections, facsimile number 703-746-9195. Please provide a copy of this Filing Receipt with the changes noted thereon. If you received a "Notice to File Missing Parts" for this application, please submit any corrections to this Filing Receipt with your reply to the Notice. When the USPTO processes the reply to the Notice, the USPTO will generate another Filing Receipt incorporating the requested corrections (if appropriate).**

Applicant(s)

Melanie Gurda, Raleigh, NC;
James S. Jennings, Durham, NC;
Lenore Ramm, Hillsborough, NC;

Domestic Priority data as claimed by applicant

Foreign Applications

If Required, Foreign Filing License Granted: 05/19/2004

Projected Publication Date: 09/01/2005

Non-Publication Request: No

Early Publication Request: No

Title

Methods, systems, and computer program products for detecting the presence of an installation on a data processing system based on the relative storage locations of one or more files

Preliminary Class

713

LICENSE FOR FOREIGN FILING UNDER
Title 35, United States Code, Section 184
Title 37, Code of Federal Regulations, 5.11 & 5.15

GRANTED

The applicant has been granted a license under 35 U.S.C. 184, if the phrase "IF REQUIRED, FOREIGN FILING LICENSE GRANTED" followed by a date appears on this form. Such licenses are issued in all applications where the conditions for issuance of a license have been met, regardless of whether or not a license may be required as set forth in 37 CFR 5.15. The scope and limitations of this license are set forth in 37 CFR 5.15(a) unless an earlier license has been issued under 37 CFR 5.15(b). The license is subject to revocation upon written notification. The date indicated is the effective date of the license, unless an earlier license of similar scope has been granted under 37 CFR 5.13 or 5.14.

This license is to be retained by the licensee and may be used at any time on or after the effective date thereof unless it is revoked. This license is automatically transferred to any related applications(s) filed under 37 CFR 1.53(d). This license is not retroactive.

The grant of a license does not in any way lessen the responsibility of a licensee for the security of the subject matter as imposed by any Government contract or the provisions of existing laws relating to espionage and the national security or the export of technical data. Licensees should apprise themselves of current regulations especially with respect to certain countries, of other agencies, particularly the Office of Defense Trade Controls, Department of State (with respect to Arms, Munitions and Implements of War (22 CFR 121-128)); the Office of Export Administration, Department of Commerce (15 CFR 370.10 (j)); the Office of Foreign Assets Control, Department of Treasury (31 CFR Parts 500+) and the Department of Energy.

NOT GRANTED

No license under 35 U.S.C. 184 has been granted at this time, if the phrase "IF REQUIRED, FOREIGN FILING LICENSE GRANTED" DOES NOT appear on this form. Applicant may still petition for a license under 37 CFR 5.12, if a license is desired before the expiration of 6 months from the filing date of the application. If 6 months has lapsed from the filing date of this application and the licensee has not received any indication of a secrecy order under 35 U.S.C. 181, the licensee may foreign file the application pursuant to 37 CFR 5.15(b).

UNITED STATES PATENT AND TRADEMARK OFFICE

Commissioner for Patents
United States Patent and Trademark Office
P.O. Box 1450
Alexandria, VA 22313-1450
www.uspto.gov

GUERIN & RODRIGUEZ, LLP
5 MOUNT ROYAL AVENUE
MOUNT ROYAL OFFICE PARK
MARLBOROUGH MA 01752

COPY MAILED

MAY 0 3 2007

OFFICE OF PETITIONS

In re Application of :

CARBONE, Darcy :
Application No. 10/790,594 : DECISION ON PETITION
Filed: March 01, 2004 : TO WITHDRAW
Attorney Docket No. **CAR-001** : FROM RECORD

This is a decision on the Request to Withdraw as attorney or agent of record under 37 C.F.R. § 1.36(b), filed February 06, 2007.

The request is **APPROVED**.

A grantable request to withdraw as attorney/agent of record must be signed by every attorney/agent seeking to withdraw or contain a clear indication that one attorney is signing on behalf of another/others. A request to withdraw will not be approved unless at least 30 (thirty) days would remain between the date of approval and the later of the expiration date of a time to file a response or the expiration date of the maximum time period which can be extended under 37 C.F.R. § 1.136(a).

The request was signed by William G. Guerin on behalf of all attorneys of record. Applicant is reminded that there is no attorney of record at this time.

All future correspondence will be directed to the first named inventor Darcy Carbone at the address indicated below

Telephone inquiries concerning this decision should be directed to Tredelle Jackson at 571-272-2783.

Monica A. Graves
Petitions Examiner
Office of Petitions

cc: **DARCY CARBONE**
6 DAMON ROAD
MEDFORD, MA 02155

UNITED STATES PATENT AND TRADEMARK OFFICE

Commissioner for Patents
United States Patent and Trademark Office
P.O. Box 1450
Alexandria, VA 22313-1450
www.uspto.gov

SHELL OIL COMPANY
P O BOX 2463
HOUSTON TX 77252-2463

COPY MAILED

SEP 1 3 2005

OFFICE OF PETITIONS

In re Application of
Knifton, et al.
Application No. 10/790,598
Filed: March 1, 2004
Attorney Docket No. TH1615 02(US)

:DECISION ON PETITIONS
:UNDER 37 CFR 1.78(a)(3)
:AND 37 CFR 1.78(a)(6)

This is a decision on the petition under 37 CFR §§ 1.78(a)(3) and 1.78(a)(6), filed October 22, 2004 (certificate of mailing date October 19, 2004), to accept an unintentionally delayed claim under 35 U.S.C. §§ 120 and 119(e) for the benefit of the prior-filed nonprovisional and provisional applications set forth in the concurrently filed amendment.

The petition is **DISMISSED AS MOOT**.

A petition under 37 CFR §§ 1. 78(a)(3) and 1.78(a)(6) is only applicable to those applications filed on or after November 29, 2000.

Along with the instant petition under 37 CFR §§ 1.78(a)(3) and 1.76(a)(6), petitioner has submitted an amendment to the first sentence of the specification following the title to include a reference to the prior-filed applications.

The instant pending nonprovisional application was filed on March 1, 2004, and was pending at the time of filing of the instant petition. While a reference to the prior-filed applications was not included in an ADS or in the first sentence of the specification following the title, reference nevertheless was made in the transmittal letter and oath/declaration filed with the above-identified application.

The current procedure where a claim for priority under 37 CFR §§ 1.78(a)(3) and 1.78(a)(6) is not included in the first sentence of the specification or in an ADS but does appear either in the oath or declaration or a transmittal letter filed with the application and the Office notes the claim for priority, no petition will be required to accept a late claim for priority. This is because the application would have been scheduled for publication on the basis of the information concerning the claim submitted elsewhere in the application within the time period set forth in 37 CFR §§ 1.78(a)(2)(ii) and 1.78(a)(5)(ii). However, on the other hand, if the USPTO does not note the claim for priority to the prior-filed application(s) set forth in the oath or declaration or transmittal

letter submitted with the application, a petition will be required to accept a late claim for priority under 37 CFR §§ 1.78(a)(3) and 1.78(a)(6).[1] In the instant case, the Office noted the claim for priority of the prior-filed applications in the transmittal letter and oath/declaration filed with the application, as shown by their inclusion on the filing receipt.

In view of the above, the $130.00 petition fee submitted is unnecessary and will be refunded to petitioner's deposit account in due course.

Any questions concerning this decision on petition may be directed to Petitions Attorney E. Shirene Willis at (571) 272-3230. All other inquiries concerning either the examination procedures or status of the application should be directed to the Technology Center.

This application is being forwarded to the Examiner of Technology Center AU 1754, but the amendment filed with the present petition will not be entered. Petitioner is informed that the amendment filed with the present petition is not acceptable as drafted since it improperly incorporates by reference prior application no. 60/291,827. A substitute amendment is required. Application No. 10/146,675 was incorporated by reference in this application's transmittal letter. However, application no. 60/291,827 was **not** incorporated by reference on this application's filing date.

Petitioner's attention is directed to Dart Industries v. Banner, 636 F.2d 684, 207 USPQ 273 (C.A.D.C. 1980), where the court drew a distinction between a permissible 35 U.S.C. § 120 statement and the impermissible introduction of new matter by way of incorporation by reference in a 35 U.S.C. § 120 statement. The court specifically stated:

> Section 120 merely provides a mechanism whereby an application becomes entitled to benefit of the filing date of an earlier application disclosing the same subject matter. Common subject matter must be disclosed, in both applications, either specifically or by an express incorporation-by-reference of prior disclosed subject matter. Nothing in section 120 itself operates to carry forward any disclosure from an earlier application. In re deSeversky, supra at 674, 177 USPQ at 146-147. Section 120 contains no magical disclosure-augmenting powers able to pierce new matter barriers. It cannot, therefore, "limit" the absolute and express prohibition against new matter contained in section 251.

---

[1] *Note* MPEP 201.11 (III)(D) , pages 200-59 and 200-60 (Rev. 2. May 2004) and 66 Federal Register 67087 at 67089 (Dec. 28, 2001), effective December 28, 2001.

The above analysis applies to section 119 statements. MPEP 201.11. Petitioner should submit an amendment that eliminates the incorporation by reference language with respect to application no. 60/291,827.

Frances Hicks
Lead Petitions Examiner
Office of Petitions
Office of the Deputy Commissioner
for Patent Examination Policy[1]

UNITED STATES PATENT AND TRADEMARK OFFICE

Commissioner for Patents
United States Patent and Trademark Office
P.O. Box 1450
Alexandria, VA 22313-1450
www.uspto.gov

SHELL OIL COMPANY
P O BOX 2463
HOUSTON, TX 77252-2463

COPY MAILED

JAN 2 9 2009

OFFICE OF PETITIONS

In re Application of :
Knifton et al. :
Application No. 10/790,598 : ON PETITION
Filed: March 1, 2004 :
Attorney Docket No. TH1515 02 (US) :

This is a decision on the petition under the unintentional provisions of 37 CFR 1.137(b), filed January 5, 2009, to revive the above-identified application.

The petition is not signed by an attorney of record. Nevertheless, in accordance with 37 CFR 1.34, the signature of Mr. Richard B. Taylor appearing on the correspondence shall constitute a representation to the United States Patent and Trademark Office that he is authorized to represent the particular party on whose behalf he acts.

The petition is **GRANTED**.

The application became abandoned for failure to reply in a timely manner to the non-final Office action mailed, June 19, 2008, which set a shortened statutory period for reply of three (3) months. No extensions of time under the provisions of 37 CFR 1.136(a) were timely obtained. Accordingly, the application became abandoned on September 20, 2008.

37 CFR 1.137(b)(3) requires a statement that "the entire delay in filing the required reply from the due date for the reply until the filing of a grantable petition pursuant to 37 CFR 1.137(b) was unintentional." Since the statement appearing in the petition varies from the language required by 37 CFR 1.137(b)(3), the statement is being construed as the required statement. Petitioner must notify the Office if this is not a correct reading of the statement appearing in the petition.

The petition satisfies the requirements of 37 CFR 1.137(b) in that petitioner has supplied (1) the reply in the form of an amendment (2) the petition fee of $1,620, and (3) an adequate statement of unintentional delay.

An extension of time under 37 CFR 1.136 must be filed prior to the expiration of the maximum extendable period for reply. See In re Application of S., 8 USPQ2d 1630, 1631 (Comm'r Pats. 1988). Since the $1,110 extension of time fee submitted with the petition on January 5, 2008 was subsequent to the maximum extendable period for reply, this fee is unnecessary and will be credited to petitioner's deposit account.

Telephone inquiries concerning this decision should be directed to Alicia Kelley at (571) 272-6059.

This application is being referred to Technology Center 1793 for further examination on the merits.

/SDB/

Sherry D. Brinkley
Petitions Examiner
Office of Petitions

UNITED STATES PATENT AND TRADEMARK OFFICE

Commissioner for Patents
United States Patent and Trademark Office
P.O. Box 1450
Alexandria, VA 22313-1450
www.uspto.gov

MICROSOFT CORPORATION
ATTN: PATENT GROUP DOCKETING DEPARTMENT
ONE MICROSOFT WAY
REDMOND WA 98052-6399

COPY MAILED

MAY 3 1 2005

OFFICE OF PETITIONS

In re Application of :
Williams, et al. : DECISION
Application No. 10/790,602 : ON PETITION
Filed: March 1, 2004 :
Attorney Docket No. 306985.01 :
For: Recall Device

This is a decision on the petition under 37 CFR 1.137(b), filed May 6, 2005 (certificate of mailing date May 2, 2005), to revive the above-identified application.

This application became abandoned for failure to timely reply to the Notice to File Corrected Application Papers ("Notice"), mailed May 24, 2004, which set a two month shortened statutory period for reply. No extensions of time having been obtained pursuant to 37 CFR 1.136(a), this application became abandoned on July 25, 2004 for failure to reply. A Notice of Abandonment was mailed on February 11, 2005.

Petitioners have submitted a proper reply in the form of replacement drawings, an adequate statement as to the unintentional nature of the delay in responding to the May 24, 2004 Notice, and the petition fee.

The petition is **granted**.

The file is being returned to the Office of Initial Patent Examination for further processing.

Telephone inquiries concerning this matter may be directed to the undersigned at (571) 272-3230.

E. Shirene Willis

E. Shirene Willis
Senior Petitions Attorney
Office of Petitions

UNITED STATES PATENT AND TRADEMARK OFFICE

UNITED STATES DEPARTMENT OF COMMERCE
United States Patent and Trademark Office
Address: COMMISSIONER FOR PATENTS
P.O. Box 1450
Alexandria, Virginia 22313-1450
www.uspto.gov

APPL NO.	FILING OR 371 (c) DATE	ART UNIT	FIL FEE REC'D	ATTY.DOCKET NO	DRAWINGS	TOT CLMS	IND CLMS
10/790,604	03/01/2004	2836	1248	9060-221	6	37	5

CONFIRMATION NO. 9585

Robert M. Meeks
Myers Bigel Sibley & Sajovec
Post Office Box 37428
Raleigh, NC 27627

CORRECTED FILING RECEIPT

OC000000012962876

Date Mailed: 06/16/2004

Receipt is acknowledged of this regular Patent Application. It will be considered in its order and you will be notified as to the results of the examination. Be sure to provide the U.S. APPLICATION NUMBER, FILING DATE, NAME OF APPLICANT, and TITLE OF INVENTION when inquiring about this application. Fees transmitted by check or draft are subject to collection. Please verify the accuracy of the data presented on this receipt. **If an error is noted on this Filing Receipt, please write to the Office of Initial Patent Examination's Filing Receipt Corrections, facsimile number 703-746-9195. Please provide a copy of this Filing Receipt with the changes noted thereon. If you received a "Notice to File Missing Parts" for this application, please submit any corrections to this Filing Receipt with your reply to the Notice. When the USPTO processes the reply to the Notice, the USPTO will generate another Filing Receipt incorporating the requested corrections (if appropriate).**

Applicant(s)

Robert W. Johnson JR., Raleigh, NC;
Dinesh Shah, San Diego, CA;

Domestic Priority data as claimed by applicant

Foreign Applications

If Required, Foreign Filing License Granted: 05/20/2004

Projected Publication Date: 09/01/2005

Non-Publication Request: No

Early Publication Request: No

Title

Power supply loading indicators and methods

Preliminary Class

307

LICENSE FOR FOREIGN FILING UNDER
Title 35, United States Code, Section 184
Title 37, Code of Federal Regulations, 5.11 & 5.15

GRANTED

The applicant has been granted a license under 35 U.S.C. 184, if the phrase "IF REQUIRED, FOREIGN FILING LICENSE GRANTED" followed by a date appears on this form. Such licenses are issued in all applications where the conditions for issuance of a license have been met, regardless of whether or not a license may be required as set forth in 37 CFR 5.15. The scope and limitations of this license are set forth in 37 CFR 5.15(a) unless an earlier license has been issued under 37 CFR 5.15(b). The license is subject to revocation upon written notification. The date indicated is the effective date of the license, unless an earlier license of similar scope has been granted under 37 CFR 5.13 or 5.14.

This license is to be retained by the licensee and may be used at any time on or after the effective date thereof unless it is revoked. This license is automatically transferred to any related applications(s) filed under 37 CFR 1.53(d). This license is not retroactive.

The grant of a license does not in any way lessen the responsibility of a licensee for the security of the subject matter as imposed by any Government contract or the provisions of existing laws relating to espionage and the national security or the export of technical data. Licensees should apprise themselves of current regulations especially with respect to certain countries, of other agencies, particularly the Office of Defense Trade Controls, Department of State (with respect to Arms, Munitions and Implements of War (22 CFR 121-128)); the Office of Export Administration, Department of Commerce (15 CFR 370.10 (j)); the Office of Foreign Assets Control, Department of Treasury (31 CFR Parts 500+) and the Department of Energy.

NOT GRANTED

No license under 35 U.S.C. 184 has been granted at this time, if the phrase "IF REQUIRED, FOREIGN FILING LICENSE GRANTED" DOES NOT appear on this form. Applicant may still petition for a license under 37 CFR 5.12, if a license is desired before the expiration of 6 months from the filing date of the application. If 6 months has lapsed from the filing date of this application and the licensee has not received any indication of a secrecy order under 35 U.S.C. 181, the licensee may foreign file the application pursuant to 37 CFR 5.15(b).

UNITED STATES PATENT AND TRADEMARK OFFICE

Commissioner for Patents
United States Patent and Trademark Office
P.O. Box 1450
Alexandria, VA 22313-1450
www.uspto.gov

MCANDREWS HELD & MALLOY, LTD
500 WEST MADISON STREET
SUITE 3400
CHICAGO IL 60661

MAILED

APR 2 6 2010

OFFICE OF PETITIONS

In re Patent No. 7,158,882 :
Issue Date: January 1, 2004 :
Application No. 10/790,614 : NOTICE
Filed: March 1, 2004 :
Attorney Docket No. 18964US01 :

This is a notice regarding your request for acceptance of a fee deficiency submission under 37 CFR 1.28 filed March 2, 2010. On September 1, 1998, the Court of Appeals for the Federal Circuit held that 37 CFR 1.28(c) is the sole provision governing the time for correction of the erroneous payment of the issue fee as a small entity. **See DH Technology v. Synergystex International, Inc. 154 F.3d 1333, 47 USPQ2d 1865 (Fed. Cir. Sept. 1, 1998).**

The Office no longer investigates or rejects original or reissue applications under 37 CFR 1.56. **1098 Off. Gaz. Pat. Office 502 (January 3, 1989)**. Therefore, nothing in this Notice is intended to imply that an investigation was done.

Your fee deficiency submission under 37 CFR 1.28 filed on May 23, 2007 is hereby accepted. The petition is **GRANTED**.

This application is no longer entitled to small entity status. Accordingly, all future fees paid in this application must be paid at the large entity rate.

This file is being forwarded to Files Repository.

Telephone inquiries related to this decision should be directed to the Kimberly Inabinet at (571) 272-4618.

/Kimberly Inabinet/

Kimberly Inabinet
Petitions Examiner
Office of Petitions

UNITED STATES PATENT AND TRADEMARK OFFICE

Commissioner for Patents
United States Patent and Trademark Office
P.O. Box 1450
Alexandria, VA 22313-1450
www.uspto.gov

TRASK BRITT
P.O. BOX 2550
SALT LAKE CITY UT 84110

COPY MAILED

APR 0 4 2007

OFFICE OF PETITIONS

In re Application of	:	
Antonius **VAN DER STEEN** et al.	:	
Application No. 10/790,618	:	DECISION ON PETITION
Filed: March 1, 2004	:	TO WITHDRAW
Attorney Docket No. 2183-6375US	:	FROM RECORD
	:	

This is a decision on the Request to Withdraw as attorney or agent of record under 37 C.F.R. § 1.36(b), filed September 26, 2006.

The request is **NOT APPROVED** as moot.

A review of the file record indicates that the power of attorney to Daniel J. Morath of TRASK BRITT has been revoked by the assignee of the patent application on November 6, 2006. Accordingly, the request to withdraw under 37 C.F.R. § 1.36(b) is moot.

All future communications from the Office will continue to be directed to the below-listed address until otherwise notified by applicant.

Telephone inquires concerning this decision should be directed to the undersigned at 571-272-7253.

Monica A. Graves
Petitions Examiner
Office of Petitions

cc: **LEYDIG VOIT & MAYER, LTD**
TWO PRUDENTIAL PLAZA, SUITE 4900
180 NORTH STETSON AVENUE
CHICAGO, IL 60601-6731

UNITED STATES PATENT AND TRADEMARK OFFICE

Commissioner for Patents
United States Patent and Trademark Office
P.O. Box 1450
Alexandria, VA 22313-1450
www.uspto.gov

DOUGHERTY CLEMENTS
1901 ROXBOROUGH ROAD
SUITE 300
CHARLOTTE NC 28211

COPY MAILED

AUG 18 2006

OFFICE OF PETITIONS

In re Application of :
Kellerman :
Application No. 10/790,619 : DECISION ON PETITION
Filed: March 1, 2004 : TO WITHDRAW
Attorney Docket No. 3942 : FROM RECORD
:

This is a decision on the Request to Withdraw as attorney or agent of record under 37 C.F.R. § 1.36(b), filed April 24, 2006.

The request is **NOT APPROVED**.

A grantable request to withdraw as attorney/agent of record must be signed by every attorney/agent seeking to withdraw or contain a clear indication that one attorney is signing on behalf of another/others. A request to withdraw will not be approved unless at least 30 (thirty) days would remain between the date of approval and the later of the expiration date of a time to file a response or the expiration date of the maximum time period which can be extended under 37 C.F.R. § 1.136(a).

The Office cannot approve the request at this time since the reasons provided do not meet any of the conditions under the mandatory or permissive categories enumerated in 37 CFR 10.40. Section 10.40 of Title 37 of the Code of Federal Regulation states, "[a] practitioner shall not withdraw from employment in a proceeding before the Office without permission from the Office[.]" More specifically, 37 CFR 10.40 states, "[i]f paragraph (b) of this section is not applicable, a practitioner may not request permission to withdraw in matter pending before the Office unless such request or such withdrawal is" for one the permissive reasons listed in 37 CFR 10.40(c). The reasons set forth in the request, "we no longer represent this client", does not meet any the conditions set forth in 37 CFR 10.40.

All future communications from the Office will continue to be directed to the above-listed address until otherwise notified by applicant.

Telephone inquiries concerning this decision should be directed to April Wise at 571-272-1642.

Denise Pothier
Petitions Examiner
Office of Petitions

cc: Ronald L. Hofer
122 Lindbergh Lane
Mooresville, NC 28117

UNITED STATES PATENT AND TRADEMARK OFFICE

Commissioner for Patents
United States Patent and Trademark Office
P.O. Box 1450
Alexandria, VA 22313-1450
www.uspto.gov

COPY MAILED

JUL 25 2005

OFFICE OF PETITIONS

Richard L. Byrne
WEBB ZIESENHEIM LOGSDON ORKIN & HANSON, P.C.
700 Koppers Building
436 7th Avenue
Pittsburgh, PA 15219-1818

In re Application of :
Donald A. Stevens :
Application No. 10/790,628 : ON PETITION
Filed: March 1, 2004 :
Attorney Docket No. 4417-040172 :

This is a decision on the petition under 37 CFR 1.137(b), filed May 12, 2005, to revive the above-identified application.

The petition is **GRANTED**.

The application became abandoned for failure to timely respond to a Notice to File Missing Parts mailed May 24, 2004. A Notice of Abandonment was mailed on February 11, 2005. On May 12, 2005, the present petition was filed, as well as (1) a declaration under 37 CFR 1.63, (2) the basic filing fee, (3) additional claim fees, (4) the surcharge under 37 CFR 1.16(e), and (5) a 4-month petition for extension of time.

Extensions of time under 37 CFR 1.136 are available only if asked for "prior to or with the response." In no case, however, may an applicant respond later than the maximum time period set by statute. Accordingly, if the question of abandonment arises when the provisions of 37 CFR 1.136 can no longer be used, then the application is abandoned when the unextended time for response has expired. Therefore, no extension of time fees are due on a petition for revival. In view thereof, the $795 extension of time fee submitted with the petition is unnecessary and will be refunded to petitioner's deposit account as authorized.

It is noted that the address given on the petition differs from the address of record. If appropriate, a change of address should be filed in this case in accordance with MPEP 601.03. A courtesy copy of this decision is being mailed to the address noted on the petition. However, until otherwise instructed, all future correspondence regarding this application will be mailed solely to the address of record.

The application is being referred to the Office of Initial Patent Examination (OIPE) for further processing using the declaration filed May 12, 2005.

Telephone inquires related to this decision should be directed to the undersigned at (571) 272-3204. Telephone inquiries related to OIPE processing should be directed to their hotline at (703) 308-1202.

Sherry D. Brinkley
Petitions Examiner
Office of Petitions
Office of the Deputy Commissioner
for Patent Examination Policy

cc: DONALD A. STEVENS
507 STEWARD STREET
WINCHESTER, VA 22601

UNITED STATES PATENT AND TRADEMARK OFFICE

Commissioner for Patents
United States Patent and Trademark Office
P.O. Box 1450
Alexandria, VA 22313-1450
www.uspto.gov

TOWNSEND AND TOWNSEND AND CREW, LLP
TWO EMBARCADERO CENTER
EIGHTH FLOOR
SAN FRANCISCO, CA 94111-3834

COPY MAILED

JUN 0 6 2008

In re Application of :
James F. Zucherman, et al. :
Application No. 10/790,651 : DECISION ON PETITION
Filed: March 1, 2004 : TO WITHDRAW
Attorney Docket No. 19433A-000154US : FROM RECORD
:

This is a decision on the Request to Withdraw as attorney or agent of record under 37 C.F.R. § 1.36(b), filed November 14, 2007.

The request is **DISMISSED** as moot.

A review of the file record indicates that the power of attorney to Townsend and Townsend and Crew, LLP has been revoked by the assignee of the patent application on December 19, 2007. Accordingly, the request to withdraw under 37 C.F.R. § 1.36(b) is moot.

All future communications from the Office will continue to be directed to the below-listed address until otherwise notified by applicant.

Telephone inquires concerning this decision should be directed to undersigned at 571-272- 1642.

April M. Wise
Petitions Examiner
Office of Petitions

cc: JOHN R. OWEN
COATS & BENNETT, PLLC
1400 CRESCENT GREEN
SUITE 300
CARY, NC 27511

UNITED STATES PATENT AND TRADEMARK OFFICE

Commissioner for Patents
United States Patent and Trademark Office
P.O. Box 1450
Alexandria, VA 22313-1450
www.uspto.gov

TOWNSEND AND TOWNSEND AND CREW, LLP
TWO EMBARCADERO CENTER
EIGHTH FLOOR
SAN FRANCISCO, CA 94111-3834

COPY MAILED

JUN 16 2008

In re Application of :
James F. Zucherman, et al. :
Application No. 10/790,651 : DECISION ON PETITION
Filed: March 1, 2004 : TO WITHDRAW
Attorney Docket No. 19433A-000154US : FROM RECORD
:

This is a decision on the Request to Withdraw as attorney or agent of record under 37 C.F.R. § 1.36(b), filed November 14, 2007.

The request is **DISMISSED** as moot.

A review of the file record indicates that the power of attorney to Townsend and Townsend and Crew, LLP has been revoked by the assignee of the patent application on December 19, 2007. Accordingly, the request to withdraw under 37 C.F.R. § 1.36(b) is moot.

All future communications from the Office will continue to be directed to the below-listed address until otherwise notified by applicant.

Telephone inquires concerning this decision should be directed to undersigned at 571-272- 1642.

April M. Wise
Petitions Examiner
Office of Petitions

cc: JOHN R. OWEN
COATS & BENNETT, PLLC
1400 CRESCENT GREEN
SUITE 300
CARY, NC 27511

UNITED STATES PATENT AND TRADEMARK OFFICE

Commissioner for Patents
United States Patent and Trademark Office
P.O. Box 1450
Alexandria, VA 22313-1450
www.uspto.gov

JACKSON WALKER LLP
2435 NORTH CENTRAL EXPRESSWAY, SUITE 600
RICHARDSON, TX 75080

COPY MAILED

DEC 0 3 2004

OFFICE OF PETITIONS

In re Application of :
Gilbert MacDonald et al :
Application No. 10/790,654 :
Filed: March 1, 2004 :
Attorney Docket No. 101950.00139

NOTICE

This is a notice regarding your request for acceptance of a fee deficiency submission under 37 CFR 1.28. On September 1, 1998, the Court of Appeals for the Federal Circuit held that 37 CFR 1.28(c) is the sole provision governing the time for correction of the erroneous payment of the issue fee as a small entity. **See DH Technology v. Synergystex International, Inc. 154 F.3d 1333, 47 USPQ2d 1865 (Fed. Cir. Sept. 1, 1998).**

The Office no longer investigates or rejects original or reissue applications under 37 CFR 1.56. **1098 Off. Gaz. Pat. Office 502 (January 3, 1989).** Therefore, nothing in this Notice is intended to imply that an investigation was done.

Your fee deficiency submission under 37 CFR 1.28 is hereby **ACCEPTED**.

Inquiries related to this communication should be directed to Irvin Dingle at (571) 272-3210.

Irvin Dingle
Petitions Examiner
Office of Petitions
Office of the Deputy Commissioner
for Patent Examination Policy

UNITED STATES PATENT AND TRADEMARK OFFICE

Commissioner for Patents
United States Patent and Trademark Office
P.O. Box 1450
Alexandria, VA 22313-1450
www.uspto.gov

VINSON & ELKINS, L.L.P.
FIRST CITY TOWER
1001 FANNIN STREET, SUITE 2500
HOUSTON TX 77002-6760

MAILED

APR 29 2009

OFFICE OF PETITIONS

In re Application of
Blume et al.
Application No. 10/790,658
Filed: March 1, 2004
Attorney Docket No. SOM700/4-4CIP2CON2DIV

DECISION ON PETITION TO WITHDRAW FROM RECORD

This is a decision on the request to withdraw as attorney of record under 37 C.F.R. § 1.36, filed March 20, 2009.

The request is **DISMISSED**.

The Office will only accept correspondence address changes to the most current address information provided for the assignee of the entire interest *who properly became of record under 37 CFR 3.71,* or, if no assignee of the entire interest has properly been made of record, the most current address information provided for the first named inventor. 37 CFR 3.71(c) states:

> *An assignee becomes of record either in a national patent application or a reexamination proceeding by filing a statement in compliance with § 3.73(b) that is signed by a party who is authorized to act on behalf of the assignee.*

Further, a review of current USPTO records does not list any recorded assignment concerning the above-identified application.

Currently, the above-identified application is on appeal, awaiting decision by the Board of Appeals.

All future communications from the Office will continue to be directed to the above-listed address until otherwise notified by applicant.

Telephone inquires concerning this decision should be directed to Joan Olszewski at 571-272-7751.

/Liana Walsh/
Liana Walsh
Petitions Examiner
Office of Petitions

UNITED STATES PATENT AND TRADEMARK OFFICE

Commissioner for Patents
United States Patent and Trademark Office
P.O. Box 1450
Alexandria, VA 22313-1450
www.uspto.gov

ARTHUR J. PLANTAMURA
GENERAL CHEMICAL PERFORMANCE PRODUCTS LLC
90 EAST HALSEY ROAD
PARSIPPANY, NJ 07054

COPY MAILED
DEC 14 2006
OFFICE OF PETITIONS

In re Patent No. 7,005,409	:	
Issue Date: February 28, 2006	:	
Application No. 10/790,664	:	DECISION ON PETITION
Filed: March 1, 2004	:	
Attorney Docket No. GC-225	:	

This is a decision on the petition under 37 CFR 1.182, filed June 12, 2006, requesting issuance of a duplicate Letters Patent for the above-identified patent.

The petition is **GRANTED**.

The Publishing Division is directed to issue a duplicate Letters Patent.

As authorized, the $400 fee for the petition under 37 CFR 1.182 has been assessed to petitioner's deposit account.

Telephone inquiries concerning this decision may be directed to the undersigned at (571) 272-3218. Inquiries regarding the issuance of a duplicate Letters Patent may be directed Krystal Paige in the Publishing Division at (703) 308-9250, Ext. 139.

A copy of this decision is being faxed to Publishing Division for issuance of a duplicate Letters Patent.

Frances Hicks
Petitions Examiner
Office of Petitions

cc: Krystal Paige, South Tower, 8th Floor (Fax No. (571) 273-9756)

UNITED STATES PATENT AND TRADEMARK OFFICE

COMMISSIONER FOR PATENTS
UNITED STATES PATENT AND TRADEMARK OFFICE
P.O. BOX 1450
ALEXANDRIA, VA 22313-1450
www.uspto.gov

Paper No.

PATTERSON, THUENTE, SKAAR &
CHRISTENSEN, P.A.
4800 IDS CENTER
80 SOUTH 8TH STREET
MINNEAPOLIS MN 55402-2100

COPY MAILED

SEP 16 2009

OFFICE OF PETITIONS

In re Patent No. 7,464,619	:	
Gregory J. Vetter	:	DECISION DISMISSING
Application No. 10/790,667	:	REQUEST FOR
Issue Date: December 16, 2008	:	RECONSIDERATION OF
Filed: March 1, 2004	:	PATENT TERM ADJUSTMENT
Attorney Docket No.	:	UNDER 37 CFR 1.705
3425.05US02	:	

This is in response to the PETITION UNDER 37 C.F.R. §1.705(d), filed February 6, 2009. Patentee requests that the determination of patent term adjustment be corrected from five hundred ninety-two (592) days to one thousand two hundred one (1201) days.

The request for reconsideration of patent term adjustment is **DISMISSED** with respect to making any change in the patent term adjustment determination under 35 U.S.C. § 154(b) of 592 days.

On December 16, 2008, the application matured into U.S. Patent No. 7,464,619, with a revised patent term adjustment of 592 days. The Office determined that the 716 days of Office delay pursuant to 35 U.S.C. 154(b)(1)(B) and 37 CFR 1.702(b) overlaps with the 656 days of Office delay pursuant to 35 U.S.C. § 154(b)(1)(A) and 37 CFR 1.702(a)(1) accorded prior to the issuance of the patent. As such, 0 additional days of patent term adjustment were entered at issuance under the three-year pendency provision. Given the Office delay of 716 days, the patent issued with a revised patent term adjustment of 592 (716 - 124) days.

On February 6, 2009, patentee timely submitted this request for reconsideration of patent term adjustment (with required fee),

asserting that the correct number of days of Patent Term Adjustment is 1201 days under the courts interpretation of the overlap provision as set forth in Wyeth v. Dudas, 580 F. Supp. 2d 138, 88 U.S.P.Q. 2d 1538 (D.D.C. 2008). Patentee asserts that pursuant to Wyeth, a PTO delay under §154(b)(1)(A) overlaps with a delay under §154(b)(1)(B) only if the delays "occur on the same day." Patentee maintains that the total non-overlapping PTO delay under § 154(b)(1)(A) & (B) is 1325 (716 + 656 - 47 overlap) days as these periods do not occur on the same day. Further, given the applicant delay of 124 days, patentee asserts entitlement to 1201 (1325 - 124) days of patent term adjustment.

Patentee's interpretation of the period of overlap has been considered, but found inconsistent with the Office's interpretation of the overlap provision, 35 U.S.C. 154(b)(2)(A). 35 U.S.C. 154(b)(2)(A) limits the adjustment of patent term, as follows:

> to the extent that the periods of delay attributable to grounds specified in paragraph (1) overlap, the period of any adjustment granted under this subsection shall not exceed the actual number of days the issuance of the patent was delayed.

As explained in *Explanation of 37 CFR 1.703(f) and of the United States Patent and Trademark Office Interpretation of 35 U.S.C. 154(b)(2)(A)*, 69 Fed. Reg. 34283 (June 21, 2004), the Office interprets 35 U.S.C. 154(b)(2)(A) as permitting either patent term adjustment under 35 U.S.C. 154(b)(1)(A)(i)-(iv), or patent term adjustment under 35 U.S.C. 154(b)(1)(B), but not as permitting patent term adjustment under both 35 U.S.C. 154(b)(1)(A)(i)-(iv) and 154(b)(1)(B). Accordingly, the Office implements the overlap provision as follows:

> If an application is entitled to an adjustment under 35 U.S.C. 154(b)(1)(B), the entire period during which the application was pending (except for periods excluded under 35 U.S.C. 154(b)(1)(B)(i)-(iii)), and not just the period beginning three years after the actual filing date of the application, is the period of delay under 35 U.S.C. 154(b)(1)(B) in determining whether periods of delay overlap under 35 U.S.C. 154(b)(2)(A). Thus, any days of delay for Office issuance of the patent more than 3 years after the filing date of the application, which overlap

with the days of patent term adjustment accorded prior to the issuance of the patent will not result in any additional patent term adjustment. See 35 U.S.C. 154(b)(1)(B), 35 U.S.C. 154(b)(2)(A), and 37 CFR § 1.703(f). See *Changes to Implement Patent Term Adjustment Under Twenty Year Term; Final Rule*, 65 Fed. Reg. 56366 (Sept. 18, 2000). See also *Revision of Patent Term Extension and Patent Term Adjustment Provisions; Final Rule*, 69 Fed. Reg. 21704 (April 22, 2004), 1282 Off. Gaz. Pat. Office 100 (May 18, 2004). See also *Explanation of 37 CFR 1.703(f) and of the United States Patent and Trademark Office Interpretation of 35 U.S.C. 154(b)(2)(A)*, 69 Fed. Reg. 34283 (June 21, 2004).

Further, as stated in the *Explanation of 37 CFR 1.703(f) and of the United States Patent and Trademark Office Interpretation of 35 U.S.C. 154(b)(2)(A)*, the Office has consistently taken the position that if an application is entitled to an adjustment under the three-year pendency provision of 35 U.S.C. 154(b)(1)(B), the entire period during which the application was pending before the Office (except for periods excluded under 35 U.S.C. 154(b)(1)(B)(i)-(iii)), and not just the period beginning three years after the actual filing date of the application, is the relevant period under 35 U.S.C. 154(b)(1)(B) in determining whether periods of delay "overlap" under 35 U.S.C. 154(b)(2)(A).

This interpretation is consistent with the statute. Taken together the statute and rule provide that to the extent that periods of delay attributable to grounds specified in 35 U.S.C. 154(b)(1) and in corresponding §1.702 overlap, the period of adjustment granted shall not exceed the actual number of days the issuance of the patent was delayed.

In this instance, the relevant period under 35 U.S.C. 154(b)(1)(B) in determining whether periods of delay "overlap" under 35 U.S.C. 154(b)(2)(A) is the period during which the application was pending before the Office beginning on the application filing date under 35 U.S.C. 111(a), March 1, 2004, and ending on the date of issuance of the patent, December 16, 2008 (not including any other periods excluded under 35 U.S.C. 154(b)(1)(B)(i)-(iii)).

Pursuant to 35 U.S.C. 154(b)(1)(A) and 37 CFR 1.702(a)(1), 716 days of patent term adjustment were accorded during the pendency of the application for Office delay. Pursuant to 35 U.S.C.

154(b)(1)(B) and 37 CFR 1.702(b), 656 days of patent term adjustment accrued for Office issuance of the patent more than 3 years after the filing date of the application.

The 656 days of patent term adjustment under 37 CFR 1.702(b) overlap with the 716 days of patent term adjustment under 37 CFR 1.702(a)(1). Entry of both the 656 days and the 716 days is neither permitted nor warranted. 716 days is the actual number of days issuance of the patent was delayed.

Accordingly, at issuance, the Office properly entered 0 additional days of adjustment pursuant to § 1.702(b) for a total of the greater period of 716 days for Office delay.

In view thereof, no change will be made in the patent term adjustment of 592 days (716 days of Office delay - 124 days of applicant delay).

The Office acknowledges submission of the $200.00 fee set forth in 37 CFR 1.18(e). No additional fees are required.

Telephone inquiries specific to this matter should be directed to Senior Petitions Attorney Douglas I. Wood, at (571) 272-3231.

Nancy Johnson
Senior Petitions Attorney
Office of Petitions

UNITED STATES PATENT AND TRADEMARK OFFICE

COMMISSIONER FOR PATENTS
UNITED STATES PATENT AND TRADEMARK OFFICE
P.O. BOX 1450
ALEXANDRIA, VA 22313-1450
www.uspto.gov

Paper No.

PATTERSON, THUENTE, SKAAR & CHRISTENSEN, P.A.
4800 IDS CENTER
80 SOUTH 8TH STREET
MINNEAPOLIS MN 55402-2100

COPY MAILED
MAR 15 2010

In re Patent No. 7,464,619	: DECISION ON REQUEST
Vetter	: FOR
Issue Date: December 16, 2008	: RECONSIDERATION OF
Application No. 10/790,667	: PATENT TERM ADJUSTMENT
Filed: March 1, 2004	: and
Atty Docket No.	: NOTICE OF INTENT TO ISSUE
3425.05US02	: CERTIFICATE OF CORRECTION

This is a decision on the petition filed on November 16, 2009, which is being treated as a request for reconsideration under 37 CFR 1.705(d) requesting that the patent term adjustment indicated on the above-identified patent be corrected to indicate that the term of the above-identified patent is extended or adjusted by one thousand two hundred one (1201) days.

The petition to correct the patent term adjustment indicated on the above-identified patent to indicate that the term of the above-identified patent is extended or adjusted by one thousand two hundred one (1201) days is **GRANTED**.

The application is being forwarded to the Certificates of Correction Branch for issuance of a certificate of correction. The Office will issue a certificate of correction indicating that the term of the above-identified patent is extended or adjusted by **one thousand two hundred one (1201)** days.

Telephone inquiries specific to this matter should be directed to Senior Petitions Attorney Douglas I. Wood at (571) 272-3231.

Anthony Knight
Supervisor
Office of Petitions

Enclosure: Copy of DRAFT Certificate of Correction

UNITED STATES PATENT AND TRADEMARK OFFICE

CERTIFICATE OF CORRECTION

PATENT : 7,464,619 B2

DATED : **December 16, 2008** **DRAFT**

INVENTOR(S) : Vetter

It is certified that error appears in the above-identified patent and that said Letters Patent is hereby corrected as shown below:

On the cover page,

[*] Notice: Subject to any disclaimer, the term of this patent is extended or adjusted under 35 USC 154(b) by 592 days.

Delete the phrase "by 592 days" and insert – by 1201 days--

UNITED STATES PATENT AND TRADEMARK OFFICE

Commissioner for Patents
United States Patent and Trademark Office
P.O. Box 1450
Alexandria, VA 22313-1450
www.uspto.gov

JACK Q. LEVER, JR.
MCDERMOTT, WILL & EMERY
600 THIRTEENTH STREET, N.W.
WASHINGTON DC 20005-3096

COPY MAILED

APR 0 9 2009

OFFICE OF PETITIONS

In re Application of	:	
Kawakami et al.	:	
Application No. 10/790,699	:	DECISION ON PETITION
Filed: March 3, 2004	:	
Attorney Docket No. 60188-792	:	

This is a decision on the petition, filed January 16, 2009, which is being treated as a petition under 37 CFR 1.181 (no fee) requesting withdrawal of the holding of abandonment in the above-identified application.

The petition is **GRANTED**.

The above-identified application was held abandoned for failure to submit the issue fee and publication fee in a timely manner in reply to the Notice of Allowance mailed August 26, 2008, which set a statutory period for reply of three (3) months. Accordingly, the above-identified application became abandoned on November 27, 2008. A Notice of Abandonment was mailed on December 19, 2008.

Petitioner asserts that the Office action dated August 26, 2008 was not received.

A review of the written record indicates no irregularity in the mailing of the Office action, and, in the absence of any irregularity, there is a strong presumption that the Office action was properly mailed to the practitioner at the address of record. This presumption may be overcome by a showing that the Office action was not in fact received. In this regard, the showing required to establish the failure to receive the Office action must consist of the following:

1. a statement from practitioner stating that the Office action was not received by the practitioner;

2. a statement from the practitioner attesting to the fact that a search of the file jacket and docket records indicates that the Office action was not received; and

3. a copy of the docket record where the non-received Office action would have been entered had it been received must be attached to and referenced in the practitioner's statement.

See MPEP § 711.03(c) under subheading "Petition to Withdraw Holding of Abandonment Based on Failure to Receive Office Action," and "Withdrawing the Holding of Abandonment When Office Actions Are Not Received," 1156 Official Gazette 53 (November 16, 1993).

The petition satisfies the above-stated requirements. Accordingly, the application was not abandoned in fact. The Notice of Abandonment is hereby vacated and the holding of abandonment withdrawn.

A Petition to Withdraw the Holding of Abandonment does not require a petition fee and none has been charged.

In view that petitioner has already paid the issue fee and the publication fee, this matter is being referred to the Office of Data Management for processing into a patent.

Liana Walsh
Petitions Examiner
Office of Petitions

UNITED STATES PATENT AND TRADEMARK OFFICE

UNITED STATES DEPARTMENT OF COMMERCE
United States Patent and Trademark Office
Address: COMMISSIONER FOR PATENTS
P.O. Box 1450
Alexandria, Virginia 22313-1450
www.uspto.gov

ALSTON & BIRD LLP
BANK OF AMERICA PLAZA
101 SOUTH TRYON STREET, SUITE 4000
CHARLOTTE, NC 28280-4000

Mail Date: 04/21/2010

Applicant	: Lassi Hippelainen	: DECISION ON REQUEST FOR
Patent Number	: 7590742	: RECALCULATION of PATENT
Issue Date	: 09/15/2009	: TERM ADJUSTMENT IN VIEW
Appliction No	: 10/790,726	: OF WYETH AND NOTICE OF INTENT TO
Filed	: 03/03/2004	: ISSUE CERTIFICATE OF CORRECTION
		:

The Request for Recalculation is **GRANTED** to the extent indicated.

The patent term adjustment has been determined to be **1122** days. The USPTO will *sua sponte* issue a certificate of correction reflecting the amount of PTA days determined by the recalculation.

Prior to the issuance of the certificate of correction, the USPTO will afford patentee an opportunity to be heard and request reconsideration. Accordingly, patentee has **one month or thirty (30) days**, whichever is longer, to file a request for reconsideration of this patent term adjustment calculation. See 35 U.S.C. 154(b)(3)(B)(ii) and 37 CFR 1.322(a)(4). No extensions of time will be granted under 37 CFR 1.136.

Patentee should use document code PET.OP if electronically filing a request for reconsideration of this patent term adjustment calculation. The patentee must also include the information required by 37 CFR 1.705(b)(2) and the fee required by 37 CFR 1.18(e). If patentee does not file a timely request for reconsideration of this patent term adjustment calculation including the information required by 37 CFR 1.705(b)(2) and the fee required by 37 CFR 1.18(e), the USPTO will issue a certificate of correction reflecting the PTA determination noted above.

Patentee should be aware that in order to preserve the right to review in the United States District Court for the District of Columbia of the USPTO patent term adjustment determination, patentee must ensure that he or she also take the steps required under 35 U.S.C. 154(b)(4)(A) in a timely manner. Nothing in the request for recalculation should be construed as providing an alternative time frame for commencing a civil action under 35 U.S.C. 154(b)(4)(A).

Any questions concerning this decision should be directed to the Office of Patent Legal Administration at 571-272-7702.

UNITED STATES PATENT AND TRADEMARK OFFICE

Commissioner for Patents
United States Patent and Trademark Office
P.O. Box 1450
Alexandria, VA 22313-1450
www.uspto.gov

FITZPATRICK CELLA HARPER & SCINTO
30 ROCKEFELLER PLAZA
NEW YORK NY 10112

MAIL

MAR 13 2008

DIRECTOR'S OFFICE
TECHNOLOGY CENTER 2600

In re Application of
KAWASAKI, SOMEI
Application No. 10/790,738
Filed: March 3, 2004
Attorney Docket No. 03500.017938

DECISION ON REQUEST TO PARTICIPATE IN PATENT PROSECUTION HIGHWAY PROGRAM AND PETITION TO MAKE SPECIAL UNDER 37 CFR 1.102(d)

This is a decision on the request to participate in the Patent Prosecution Highway (PPH) program and the petition under 37 CFR 1.102(d), filed February 22, 2008, to make the above-identified application special.

The request and petition are **DENIED**.

A grantable request to participate in the PPH program and petition to make special require:

(1) The U.S. application must validly claim priority under 35 U.S.C. 119(a) to one or more applications filed in the JPO;
(2) Applicant must submit a copy of the allowable/patentable claim(s) from the JPO application(s) along with an English translation thereof and a statement that the English translation is accurate;
(3) All the claims in the U.S. application must sufficiently correspond or be amended to sufficiently correspond to the allowable/patentable claim(s) in the JPO application(s);
(4) Examination of the U.S. application has not begun;
(5) Applicant must submit a copy of all the office actions from each of the JPO application(s) containing the allowable/patentable claim(s) along with an English translation thereof and a statement that the English translation is accurate;
(6) Applicant must submit an IDS listing the documents cited by the JPO examiner in the JPO office action along with copies of documents except U.S. patents or U.S. patent application publications; and
(7) The required petition fee under 37 CFR 1.17(h).

The request to participate in the PPH program and petition comply with the above requirements. Accordingly, the above-identified application has been accorded "special" status.

Concerning item 4.) above: Examination of the instant U.S. Application has begun. An Office action was mailed on February 21, 2008, prior to the submission of the request.

Telephone inquiries concerning this decision should be directed to Kenneth Wieder at 571-272-2986.

All other inquiries concerning the examination or status of the application should be directed to Patent Application Information Retrieval (PAIR) system.

The application is being forwarded to the examiner for action on the merits commensurate with this decision.

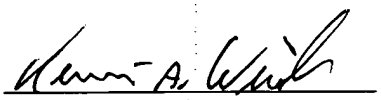

Kenneth Wieder
Quality Assurance Specialist
Technology Center 2600
Communications

SPE RESPONSE FOR CERTIFICATE OF CORRECTION

Paper No.: _____

DATE : March 6, 2008

TO SPE OF : ART UNIT 2859

SUBJECT : Request for Certificate of Correction for Appl. No. 10/790739 patent no7190916

Please respond to this request for a certificate of correction within 7 days.

Please review the requested changes/corrections as shown in the **COCIN** document(s) in the IFW application image. No new matter should be introduced, nor should the scope or meaning of the claims be changed.

Please complete the response (see below) and forward the completed response to scanning using document code **COCX**.

Magdalene Talley

Certificates of Correction Branch

703-308-9390 ext. 116

Thank You For Your Assistance

The request for issuing the above-identified correction(s) is hereby:

Note your decision on the appropriate box.

- ☐ **Approved** — **All** changes apply.
- ☐ **Approved in Part** — Specify below which changes **do not** apply.
- ☐ **Denied** — State the reasons for denial below.

Comments: _____

_____

_____

_____

_____

_____ _____

SPE **Art Unit**

SPE RESPONSE FOR CERTIFICATE OF CORRECTION

Paper No.: _____

DATE : March 6, 2008

TO SPE OF : ART UNIT ~~2850~~ 2831

SUBJECT : Request for Certificate of Correction for Appl. No. 10/790739 patent no7190916

Please respond to this request for a certificate of correction within 7 days.

Please review the requested changes/corrections as shown in the **COCIN** document(s) in the IFW application image. No new matter should be introduced, nor should the scope or meaning of the claims be changed.

Please complete the response (see below) and forward the completed response to scanning using document code **COCX**.

Magdalene Talley

Certificates of Correction Branch

703-308-9390 ext. 116

Thank You For Your Assistance

The request for issuing the above-identified correction(s) is hereby:

Note your decision on the appropriate box.

- ☒ **Approved** — **All** changes apply.
- ☐ **Approved in Part** — Specify below which changes **do not** apply.
- ☐ **Denied** — State the reasons for denial below.

Comments: Changes are editorial and do not affect in any way the scope of the patent granted

/LMA/ 02/01/2010

/Diego Gutierrez/

SPE

2831

Art Unit

UNITED STATES PATENT AND TRADEMARK OFFICE

Commissioner for Patents
United States Patent and Trademark Office
P.O. Box 1450
Alexandria, VA 22313-1450
www.uspto.gov

August 2005

DICKSTEIN SHAPIRO MORIN & OSHINSKY LLP
2101 L STREET NW
WASHINGTON, DC 20037-1526

SEP 0 1 2005

In re Application of:
KUNIO MORIYAMA ET AL.
Serial No.: 10/790,763
Filed: 03 March 2004
Docket: K2020.0005/P005
Title: PARTICLE BEAM THERAPY SYSTEM

DECISION ON PETITION TO MAKE SPECIAL UNDER 37 C.F.R. § 1.102(d)

This is a decision on the petition filed on July 18, 2005, to make the above-identified application special under the accelerated examination procedure set forth in MPEP § 708.02(X) in accordance with 37 C.F.R. § 1.102(d).

The petition to make the application special is **GRANTED**.

In support of the petition, petition provides: a) the applicable petition fee; and b) a statement explaining how the invention contributes to the treatment of cancer.

For accelerated examination under MPEP § 708.02(X) in accordance with 37 C.F.R. § 1.102(d), a petition with the following showing is required: a) the applicable petition fee; and b) a statement explaining how the invention contributes to the treatment, prevention, or diagnosis of cancer.

The requirements of MPEP § 708.02(X) are considered to have been met. The application will be advanced out of turn for examination, and will continue to be treated as special throughout the entire prosecution in the Office according to the procedure set forth in MPEP § 708.02.

The application file is being forwarded to the examiner for expedited prosecution.

If the examiner finds any interfering application for the same subject matter, he/she should consider such application simultaneously with this application and should state in the official letter of such application that he/she is taking it out of its turn because of possible interference.

Should an appeal be taken in this application or should this application becomes involved in an interference, consideration of the appeal and the interference will be expedited by all Patent and Trademark Office officials concerned, contingent likewise upon diligent prosecution by the applicant.

After allowance, this application will be given priority for printing. See M.P.E.P. § 1309.

Any inquiry regarding this decision should be directed to Hien H. Phan, Special Program Examiner, at (571) 272-1606.

Hien H. Phan, Special Program Examiner
Technology Center 2800 - Semiconductors,
Electrical & Optical Systems & Components

UNITED STATES PATENT AND TRADEMARK OFFICE

Commissioner for Patents
United States Patent and Trademark Office
P.O. Box 1450
Alexandria, VA 22313-1450
www.uspto.gov

ROYLANCE ABRAMS BERDO & GOODMAN
1300 19TH STREET, N.W., SUITE 600
WASHINGTON, DC 20036

COPY MAILED

SEP 17 2004

OFFICE OF PETITIONS

In re Application of :
Gerhard Schmaus et al :
Application No. 10/790,770 : DECISION ON PETITION
Filed: March 3, 2004 : UNDER 37 CFR 1.78(a)(3)
Attorney Docket No. 46347 :

This is a decision on the petition under 37 CFR 1.78(a)(3), filed August 18, 2004, to accept an unintentionally delayed claim under 35 U.S.C. § 120 and 365(c) for the benefit of priority to prior-filed PCT Application No. PCT/EP02/09793, filed March 9, 2002, set forth in the Application Data Sheet (ADS) submitted concurrently with the instant petition.

The petition is **DISMISSED**.

A petition for acceptance of a claim for late priority under 37 CFR 1.78(a)(3) is only applicable to those applications filed on or after November 29, 2000. Further, the petition is appropriate only after the expiration of the period specified in 37 CFR 1.78(a)(2)(ii). In addition, the petition under 37 CFR 1.78(a)(3) must be accompanied by:

(1) the reference required by 35 U.S.C. § 120 and 37 CFR 1.78(a)(2)(i) of the prior-filed application, unless previously submitted;
(2) the surcharge set forth in § 1.17(t); and
(3) a statement that the entire delay between the date the claim was due under 37 CFR 1.78(a)(2)(ii) and the date the claim was filed was unintentional. The Commissioner may require additional information where there is a question whether the delay was unintentional.

The instant petition does not comply with item (1).

37 CFR 1.78(a)(2)(i) requires that any nonprovisional application claiming the benefit of one or more prior-filed copending nonprovisional applications must contain or be amended to contain a reference to each such prior-filed application, identifying it by application number (consisting of the series code and serial number) and indicating the relationship of the applications. The relationship between the applications is whether the subject application is a continuation,

divisional, or continuation-in-part of a prior-filed nonprovisional application. An example of a proper benefit claim is: "This application is a continuation of Application No. 10/---, filed---." A benefit claim that merely states: "This application claims the benefit of Application No. 10/---, filed---," does not comply with 37 CFR 1.72(a)(2)(i) since the proper relationship, which includes the type of continuing application, is not stated. Also, the status of each nonprovisional parent application (if it is patented or abandoned) should also be indicated, following the filing date of the parent nonprovisional application. See Manual of Patent Examining Procedure, 8th ed., August 2001), Section 201.11, Reference to First Application. The ADS filed August 18, 2004 fails to state the relationship of Application No. PCT/EP02/09793, filed March 9, 2002, to the instant application.

Accordingly, before the petition under 37 CFR § 1.78(a)(3) can be granted, a renewed petition under 37 CFR § 1.78(a)(3) and a substitute amendment[1] or an ADS stating the relationship of the prior-filed application to the instant application is required.

Further correspondence with respect to this matter should be addressed as follows:

By mail:
Mail Stop PETITIONS
Commissioner for Patents
Post Office Box 1450
Alexandria, VA 22313-1450

By hand:
Customer Window located at:
U.S. Patent and Trademark Office
220 20th Street S
Customer Window, Mail Stop Petitions
Crystal Plaza Two Lobby, Room 1B03
Arlington, VA 22202

By fax:
(703) 872-9306
ATTN: Office of Petitions

[1] *Note* 37 CFR 1.121

Any questions concerning this matter may be directed to Wan Laymon at (703) 306-5685.[2]

Frances Hicks
Lead Petitions Examiner
Office of Petitions
Office of the Deputy Commissioner
for Patent Examination Policy

[2] Effective September 27, 2004, the phone number will be 571-272-3220.

UNITED STATES PATENT AND TRADEMARK OFFICE

Commissioner for Patents
United States Patent and Trademark Office
P.O. Box 1450
Alexandria, VA 22313-1450
www.uspto.gov

ROYLANCE ABRAMS BERDO & GOODMAN
1300 19TH STREET, N.W., SUITE 600
WASHINGTON, DC 20036

COPY MAILED

NOV 10 2004

OFFICE OF PETITIONS

In re Application of
Gerhard Schmaus et al
Application No. 10/790,770
Filed: March 3, 2004
Attorney Docket No. 46347

: DECISION ON PETITION
: UNDER 37 CFR 1.78(a)(3)

This is a decision on the renewed petition under 37 CFR 1.78(a)(3), filed August 19, 2004, to accept an unintentionally delayed claim under 35 U.S.C. § 120 and 365(c) for the benefit of priority to prior-filed PCT Application No. PCT/EP02/09793, filed March 9, 2002, set forth in the Application Data Sheet (ADS) submitted concurrently with the instant petition.

The petition is **GRANTED**.

A petition for acceptance of a claim for late priority under 37 CFR 1.78(a)(3) is only applicable to those applications filed on or after November 29, 2000. Further, the petition is appropriate only after the expiration of the period specified in 37 CFR 1.78(a)(2)(ii). In addition, the petition under 37 CFR 1.78(a)(3) must be accompanied by:

(1) the reference required by 35 U.S.C. § 120 and 37 CFR 1.78(a)(2)(i) of the prior-filed application, unless previously submitted;
(2) the surcharge set forth in § 1.17(t); and
(3) a statement that the entire delay between the date the claim was due under 37 CFR 1.78(a)(2)(ii) and the date the claim was filed was unintentional. The Commissioner may require additional information where there is a question whether the delay was unintentional.

The instant pending application was filed on March 3, 2004, and was pending at the time of filing of the instant petition. A reference to the above-noted, prior-filed PCT application has been included in an ADS as required by 37 CFR 1.78(a)(2)(iii).

The instant nonprovisional application was filed after November 29, 2000, and the claim herein for the benefit of priority to the prior-filed PCT application is submitted after expiration of the period specified in 37 CFR 1.78(a)(2)(ii). Also, the reference to prior-filed PCT application was submitted during the pendency of the instant nonprovisional application, for which the claim for benefit of priority is sought. *See* 35 U.S.C. §§ 120 and 365(c). Accordingly, having found that the instant petition for acceptance of an unintentionally delayed claim for the benefit of priority under 35 U.S.C. §§ 120 and 365(c) to the prior-filed PCT application satisfies the conditions of 37 CFR 1.78(a)(3), the petition is granted.

The granting of the petition to accept the delayed benefit claim to the prior-filed application under 37 CFR 1.78(a)(3) should not be construed as meaning that the instant application is entitled to the benefit of the prior-filed application. In order for the instant application to be entitled to the benefit of the prior-filed application, all other requirements under 35 U.S.C. § 120 and 37 CFR 1.78(a)(1) and (a)(2) must be met. Similarly, the fact that the corrected Filing Receipt accompanying this decision on petition includes the prior-filed application should not be construed as meaning that applicants are entitled to the claim for benefit of priority to the prior-filed application noted thereon. Accordingly, the examiner will, in due course, consider this benefit claim and determine whether the instant application is entitled to the benefit of the earlier filing date.

Any inquiries concerning this decision may be directed to Wan Laymon at (517) 272-3220.

This matter is being referred to Technology Center Art Unit 1621 for examination in due course, including consideration by the examiner of applicants' entitlement to claim benefit of priority under 35 U.S.C. §§ 120 and 365(c) to the above-noted, prior-filed PCT application.

Frances Hicks
Lead Petitions Examiner
Office of Petitions
Office of the Deputy Commissioner
for Patent Examination Policy

UNITED STATES PATENT AND TRADEMARK OFFICE

Commissioner for Patents
United States Patent and Trademark Office
P.O. Box 1450
Alexandria, VA 22313-1450
www.uspto.gov

YOUNG & THOMPSON
745 SOUTH 23RD STREET
2ND FLOOR
ARLINGTON VA 22202

COPY MAILED

JUN 2 8 2007

OFFICE OF PETITIONS

In re Application of :
Pierre Cornilleau :
Application No. 10/790,778 : DECISION GRANTING PETITION
Filed: March 3, 2004 : UNDER 37 CFR 1.313(c)(2)
Attorney Docket No. 0513-1099 :

This is a decision on the petition under 37 CFR 1.313(c)(2), filed June 27, 2007, to withdraw the above-identified application from issue after payment of the issue fee.

The petition is **GRANTED**.

The above-identified application is withdrawn from issue for consideration of a submission under 37 CFR 1.114 (request for continued examination). *See* 37 CFR 1.313(c)(2).

Petitioner is advised that the issue fee paid on May 2, 2007 cannot be refunded. If, however, this application is again allowed, petitioner may request that it be applied towards the issue fee required by the new Notice of Allowance.[1]

Telephone inquiries regarding this decision should be directed to April Wise at (571) 272-1642.

This application is being referred to Technology Center AU 3637 for processing of the request for continued examination under 37 CFR 1.114 and for consideration of the concurrently filed amendment.

Francis Hicks

Francis M. Hicks
Petitions Examiner
Office of Petitions

[1] *The request to apply the issue fee to the new Notice may be satisfied by completing and returning the new Part B – Fee(s) Transmittal Form (along with any balance due at the time of submission). Petitioner is advised that the Issue Fee Transmittal Form must be completed and timely submitted to avoid abandonment of the application.*

UNITED STATES PATENT AND TRADEMARK OFFICE

Commissioner for Patents
United States Patent and Trademark Office
P.O. Box 1450
Alexandria, VA 22313-1450
www.uspto.gov

Date : June 28, 2007

TO : Director, Office of Patent Publication

FROM : Office of Petitions

SUBJECT : Withdrawal from Issue of **Application No. 10/790,778**

Applicant(s) : Pierre Cornilleau
Application No. : 10/790,778
Filed : March 3, 2004

The above-identified application has been assigned Patent No. 7,237,493 and an issue date of July 3, 2007.

It is hereby directed that this application be withdrawn from issue at the request of the applicant. Do not refund the issue fee.

The following erratum should be published in the Official Gazette if the above-identified application is published in the OG of July 3, 2007:

"All reference to Patent No. 7,237,493 to Pierre Cornilleau of France for FOLDING TABLE TENNIS TABLE appearing in the Official Gazette of July 3, 2007 should be deleted since no patent was granted."

Frances Hicks
Petitions Examiner
Office of Petitions

cc: Paul Harrison
Deneise Boyd
Mary Louise McAskill
Niomi Farmer
Mary E. Johnson (Cookie)
Duane Davis (CDS)
Bradley Harris
Kimberly Terrell
Kay Pinkney
Betty Powell

UNITED STATES PATENT AND TRADEMARK OFFICE

COMMISSIONER FOR PATENTS
UNITED STATES PATENT AND TRADEMARK OFFICE
P.O. BOX 1450
ALEXANDRIA, VA 22313-1450
www.uspto.gov

NIXON & VANDERHYE, PC
1100 N GLEBE ROAD
8TH FLOOR
ARLINGTON, VA 22201-4714

COPY MAILED

APR 15 2005

OFFICE OF PETITIONS

In re Application of :
Keji Wakahara, et al. :
Application No. 10/790,779 : ON PETITION
Filed: March 3, 2004 :
Attorney Docket No. 2018-852 :

This is a decision on the petition, filed April 14, 2005, under 37 CFR 1.313(c)(2) to withdraw the above-identified application from issue after payment of the issue fee.

The petition is **GRANTED**.

The above-identified application is withdrawn from issue for consideration of a submission under 37 CFR 1.114 (request for continued examination). See 37 CFR 1.313(c)(2).

Petitioner is advised that the issue fee paid on February 23, 2005 in the above-identified application cannot be refunded. If, however, the above-identified application is again allowed, petitioner may request that it be applied towards the issue fee required by the new Notice of Allowance. [1]

Telephone inquiries relating to this decision should be directed to the undersigned at (571) 272-3204.

The application is being referred to Technology Center AU 2855 for further processing of the request for continued examination under 37 CFR 1.114.

Sherry D. Brinkley
Petitions Examiner
Office of Petitions
Office of the Deputy Commissioner
for Patent Examination Policy

[1]The request to apply the issue fee to the new Notice may be satisfied by completing and returning the new Issue Fee Transmittal Form PTOL-85(b), which includes the following language thereon: "Commissioner for Patents is requested to apply the Issue Fee and Publication Fee (if any) or re-apply any previously paid issue fee to the application identified above." Petitioner is advised that, whether a fee is indicated as being due or not, the Issue Fee Transmittal Form **must** be completed and timely submitted to avoid abandonment. Note the language in bold text on the first page of the Notice of Allowance and Fee(s) Due (PTOL-85).

UNITED STATES PATENT AND TRADEMARK OFFICE

Commissioner for Patents
United States Patent and Trademark Office
P.O. Box 1450
Alexandria, VA 22313-1450
www.uspto.gov

Paper No.

EDELL SHAPIRO FINNAN, LLC
1901 RESEARCH BLVD
SUITE 400
ROCKVILLE, MD 20850

COPY MAILED

NOV 0 4 2004

OFFICE OF PETITIONS

In re Application of :
Lian et al. :
Application No. 10/790,786 : ON PETITION
Filed: March 3, 2004 :
Attorney Docket No. :
1875.3970001 :

This is in response to a Petition Under 37 CFR 1.47, filed September 24, 2004, to allow the other inventor(s) to proceed with the application on behalf of himself or herself and the nonsigning inventor.

The petition is **granted**.

The above-identified application and papers have been reviewed and found in compliance with 37 CFR 1.47(a). This application is hereby accorded Rule 1.47(a) status.

Petitioner has shown that the non-signing inventor, Hua Shen, refuse to join in the application.

As provided in Rule 1.47(a), this Office will forward notice of this application's filing to the non-signing inventor at the address given in the Petition. Notice of the filing of this application will also be published in the Official Gazette.

The application file is being returned to the Office of Initial Patent Examination for continued processing.

Telephone inquiries concerning this matter should be directed to Petitions Attorney Derek L. Woods at (571) 272-3232.

Derek L. Woods
Attorney/Advisor
Office of Petitions

UNITED STATES PATENT AND TRADEMARK OFFICE

Commissioner for Patents
United States Patent and Trademark Office
P.O. Box 1450
Alexandria, VA 22313-1450
www.uspto.gov

BUCHANAN, INGERSOLL & ROONEY PC
POST OFFICE BOX 1404
ALEXANDRIA VA 22313-1404

COPY MAILED

APR 19 2007

OFFICE OF PETITIONS

In re Application of :
Helena Corneliusson :
Application No. 10/790,793 : DECISION ON PETITION
Filed: March 3, 2004 :
Attorney Docket No. 018798-214 :

This is a decision on the petition, filed December 21, 2006, which is being treated as a petition under 37 CFR 1.181 (no fee) requesting withdrawal of the holding of abandonment in the above-identified application.

The petition is **GRANTED**.

This application was held abandoned for failure to reply to the nonfinal Office action mailed March 28, 2006, which set a three (3) month shortened statutory period for reply. A Notice of Abandonment was mailed on January 8, 2007.

Petitioner asserts that the Office action dated March 28, 2006 was not received.

A review of the written record indicates no irregularity in the mailing of the Office action, and, in the absence of any irregularity, there is a strong presumption that the Office action was properly mailed to the practitioner at the address of record. This presumption may be overcome by a showing that the Office action was not in fact received. In this regard, the showing required to establish the failure to receive the Office action must consist of the following:

1. a statement from practitioner stating that the Office action was not received by the practitioner;

2. a statement from the practitioner attesting to the fact that a search of the file jacket and docket records indicates that the Office action was not received; and

3. a copy of the docket record where the nonreceived Office action would have been entered had it been received and docketed must be attached to and referenced in the practitioner's statement.

See MPEP § 711.03(c) under subheading "Petition to Withdraw Holding of Abandonment Based on Failure to Receive Office Action," and "Withdrawing the Holding of Abandonment When Office Actions Are Not Received," 1156 Official Gazette 53 (November 16, 1993).

The petition satisfies the above-stated requirements. Accordingly, the application was not abandoned in fact.

In view of the above, the Notice of Abandonment is hereby vacated and the holding of abandonment withdrawn.

This application is being referred to Technology Center Art Unit 3761 to consider the amendment submitted on December 21, 2006.

Karen Creasy

Karen Creasy
Petitions Examiner
Office of Petitions

UNITED STATES PATENT AND TRADEMARK OFFICE

Commissioner for Patents
United States Patent and Trademark Office
P.O. Box 1450
Alexandria, VA 22313-1450
www.uspto.gov

VOLENTINE & WHITT PLLC
ONE FREEDOM SQUARE
11951 FREEDOM DRIVE SUITE 1260
RESTON VA 20190

MAILED

APR 23 2009

OFFICE OF PETITIONS

In re Application of:
Lee et al.
Pat. Num.: 7271789
Issue Date: 09/18/2007
Application No. 10/790824
Filing or 371(c) Date: 03/03/2004
Atty. Docket No. LEE.007

ON PETITION

This is a decision on the Petition Under 37 C.F.R. 1.182 Requesting Duplicate Letters Patent, filed January 7, 2008.

The petition is **GRANTED**.

The Office of Data Management is directed to issue a duplicate Letters Patent.

Questions concerning this decision may be directed to the undersigned at 571-232-3232. Inquiries regarding the issuance of a duplicate Letters Patent may be directed to Niomi Farmer, in the Office of Data Management at (703) 308-9250, Ext. 119.

A copy of this decision is being faxed to the Office of Data Management for issuance of a duplicate Letters Patent.

/Derek L. Woods/
Derek L. Woods
Attorney
Office of Petitions

CC: Niomi Farmer
South Tower 8th floor, Room C-32 (FAX 571-270-9937)

UNITED STATES PATENT AND TRADEMARK OFFICE

Commissioner for Patents
United States Patent and Trademark Office
P.O. Box 1450
Alexandria, VA 22313-1450
www.uspto.gov

SQUIRE SANDERS & DEMPSEY LLP
14TH FLOOR
8000 TOWERS CRESCENT
TYSONS CORNER VA 22182

COPY MAILED

APR 0 2 2007

OFFICE OF PETITIONS

In re Application of :
Holma, et al. :
Application No. 10/790,831 : ON PETITION
Filed: March 3, 2004 :
Attorney Docket No. 59864.00560 :

This is a decision on the petition to withdraw the holding of abandonment under 37 CFR 1.181, filed February 12, 2007.

The petition is **GRANTED**.

This application was held abandoned for failure to timely file a response to the final Office action mailed August 10, 2006. This Office action set an extendable period for reply of three (3) months. Prior to the end of the extendable period, the Office mailed a Notice of Abandonment on January 11, 2007.

Petitioner timely filed a Notice of Appeal, together with a three month extension of time, on February 12, 2007 (made timely under 37 CFR 1.7(a) because February 10, 2007 fell on a Saturday). Accordingly, it is obvious that the Notice of Abandonment was mailed in error.

In view thereof, **THE HOLDING OF ABANDONMENT IS WITHDRAWN.**

Applicants are reminded that they have two months from the filing of the Notice of Appeal in which to file an Appeal Brief.

The matter is being forwarded to Group Art Unit 2616 for further processing.

Telephone inquiries regarding this decision should be directed to the undersigned at (571)272-3207.

Cliff Congo
Petitions Attorney
Office of Petitions

UNITED STATES PATENT AND TRADEMARK OFFICE

Commissioner for Patents
United States Patent and Trademark Office
P.O. Box 1450
Alexandria, VA 22313-1450
www.uspto.gov

MATTINGLY, STANGER, MALUR &
BRUNDIDGE, P.C.
1800 Diagonal Road
Suite 370
Alexandria, VA 22314

MAILED

MAR 22 2006

Technology Center 2100

In re Application of:
T. SISHIMOTO, et al.
Application No. 10/790,837
Filed: March 3, 2004
For: STORAGE MANAGING METHOD AND ITS DEVICE

DECISION ON PETITION TO MAKE SPECIAL

This is a decision on the petitions, filed on 31 May 2005 and 08 November 2005 under 37 C.F.R. §102(d) and M.P.E.P. § 708.02(VIII): Accelerated Examination, to make the above-identified application special.

The petition is **GRANTED**.

M.P.E.P. § 708.02, Section VIII which sets out the prerequisites for a grantable petition for Accelerated Examination under 37 C.F.R. § 102(d) states in relevant part:

> A new application (one which has not received any examination by the examiner) may be granted special status provided that applicant (and this term includes applicant's attorney or agent) complies with each of the following items:
>
> (A) Submits a petition to make special accompanied by the fee set forth in 37 CFR 1.17(h);
>
> (B) Presents all claims directed to a single invention, or if the Office determines that all the claims presented are not obviously directed to a single invention, will make an election without traverse as a prerequisite to the grant of special status;
>
> (C) Submits a statement(s) that a pre-examination search was made, listing the field of search by class and subclass, publication, Chemical Abstracts, foreign patents, etc. A search made by a foreign patent office satisfies this requirement;
>
> (D) Submits one copy each of the references deemed most closely related to the subject matter encompassed by the claims if said references are not already of record; and
>
> (E) Submits a detailed discussion of the references, which discussion points out, with the particularity required by 37 CFR 1.111 (b) and (c), how the claimed subject matter is patentable over the references.

Applicant's submissions of 31 May 2005 and 08 November 2005 meet all the criteria set out above. Accordingly, the petition is **GRANTED**. The application file is being forwarded to the Examiner for accelerated examination in accordance with M.P.E.P. § 708.02. If the application is subsequently allowed, it will be given priority for printing. See M.P.E.P. § 1309.

Vincent N. Trans
Special Program Examiner
Technology Center 2100
Computer Architecture, Software, and
Information Security
571-272-3613

UNITED STATES PATENT AND TRADEMARK OFFICE

Commissioner for Patents
United States Patent and Trademark Office
P.O. Box 1450
Alexandria, VA 22313-1450
www.uspto.gov

August 2005

DICKSTEIN SHAPIRO MORIN & OSHINSKY LLP
2101 L STREET NW
WASHINGTON, DC 20037-1526

SEP 0 1 2005

In re Application of:	
KUNIO MORIYAMA ET AL.	
Serial No.: 10/790,849	DECISION ON PETITION TO
Filed: 03 March 2004	MAKE SPECIAL UNDER
Docket: K2020.0005/P003	37 C.F.R. § 1.102(d)
Title: PARTICLE BEAM THERAPY SYSTEM	

This is a decision on the petition filed on July 18, 2005, to make the above-identified application special under the accelerated examination procedure set forth in MPEP § 708.02(X) in accordance with 37 C.F.R. § 1.102(d).

The petition to make the application special is **GRANTED**.

In support of the petition, petition provides: a) the applicable petition fee; and b) a statement explaining how the invention contributes to the treatment of cancer.

For accelerated examination under MPEP § 708.02(X) in accordance with 37 C.F.R. § 1.102(d), a petition with the following showing is required: a) the applicable petition fee; and b) a statement explaining how the invention contributes to the treatment, prevention, or diagnosis of cancer.

The requirements of MPEP § 708.02(X) are considered to have been met. The application will be advanced out of turn for examination, and will continue to be treated as special throughout the entire prosecution in the Office according to the procedure set forth in MPEP § 708.02.

The application file is being forwarded to the examiner for expedited prosecution.

If the examiner finds any interfering application for the same subject matter, he/she should consider such application simultaneously with this application and should state in the official letter of such application that he/she is taking it out of its turn because of possible interference.

Should an appeal be taken in this application or should this application becomes involved in an interference, consideration of the appeal and the interference will be expedited by all Patent and Trademark Office officials concerned, contingent likewise upon diligent prosecution by the applicant.

After allowance, this application will be given priority for printing. See M.P.E.P. § 1309.

Any inquiry regarding this decision should be directed to Hien H. Phan, Special Program Examiner, at (571) 272-1606.

Hien H. Phan, Special Program Examiner
Technology Center 2800 - Semiconductors,
Electrical & Optical Systems & Components

UNITED STATES PATENT AND TRADEMARK OFFICE

Commissioner for Patents
United States Patent and Trademark Office
P.O. Box 1450
Alexandria, VA 22313-1450
www.uspto.gov

August 2005

DICKSTEIN SHAPIRO MORIN & OSHINSKY LLP
2101 L STREET NW
WASHINGTON, DC 20037-1526

SEP 01 2005

In re Application of:
KUNIO MORIYAMA ET AL.
Serial No.: 10/790,850
Filed: 03 March 2004
Docket: K2020.0005/P006
Title: PARTICLE BEAM THERAPY SYSTEM

DECISION ON PETITION TO MAKE SPECIAL UNDER 37 C.F.R. § 1.102(d)

This is a decision on the petition filed on July 18, 2005, to make the above-identified application special under the accelerated examination procedure set forth in MPEP § 708.02(X) in accordance with 37 C.F.R. § 1.102(d).

The petition to make the application special is **GRANTED**.

In support of the petition, petition provides: a) the applicable petition fee; and b) a statement explaining how the invention contributes to the treatment of cancer.

For accelerated examination under MPEP § 708.02(X) in accordance with 37 C.F.R. § 1.102(d), a petition with the following showing is required: a) the applicable petition fee; and b) a statement explaining how the invention contributes to the treatment, prevention, or diagnosis of cancer.

The requirements of MPEP § 708.02(X) are considered to have been met. The application will be advanced out of turn for examination, and will continue to be treated as special throughout the entire prosecution in the Office according to the procedure set forth in MPEP § 708.02.

The application file is being forwarded to the examiner for expedited prosecution.

If the examiner finds any interfering application for the same subject matter, he/she should consider such application simultaneously with this application and should state in the official letter of such application that he/she is taking it out of its turn because of possible interference.

Should an appeal be taken in this application or should this application becomes involved in an interference, consideration of the appeal and the interference will be expedited by all Patent and Trademark Office officials concerned, contingent likewise upon diligent prosecution by the applicant.

After allowance, this application will be given priority for printing. See M.P.E.P. § 1309.

Any inquiry regarding this decision should be directed to Hien H. Phan, Special Program Examiner, at (571) 272-1606.

Hien H. Phan, Special Program Examiner
Technology Center 2800 - Semiconductors,
Electrical & Optical Systems & Components

UNITED STATES PATENT AND TRADEMARK OFFICE

COMMISSIONER FOR PATENTS
UNITED STATES PATENT AND TRADEMARK OFFICE
P.O. BOX 1450
ALEXANDRIA, VA 22313-1450
www.uspto.gov

Paper No.

WENDEROTH, LIND & PONACK, L.L.P.
1030 15th Street, N.W.,
Suite 400 East
Washington DC 20005-1503

COPY MAILED

SEP 22 2009

OFFICE OF PETITIONS

In re Application of :
Iwai et al. :
Application No. 10/790,857 :
Filed: March 3, 2004 :
Attorney Docket No. 2004_0335A :

DECISION ON APPLICATION FOR PATENT TERM ADJUSTMENT

This is in response to the APPLICATION FOR PATENT TERM ADJUSTMENT UNDER 37 C.F.R. 1.705," filed on January 23, 2009. Applicants request that the initial Determination of Patent Term Adjustment under 35 U.S.C. 154(b) be corrected from two hundred and eighty-one (281) days to six hundred and twenty-nine (629) days.

The application for patent term adjustment is **GRANTED**.

The Office has updated the PAIR screen to reflect that the correct Patent Term Adjustment (PTA) determination at the time of the mailing of the Notice of Allowance is **six hundred and twenty-nine (629)** days. A copy of the updated PAIR screen, showing the correct determination, is enclosed.

On October 24, 2008, the Office mailed a Determination of Patent Term Adjustment under 35 U.S.C. 154(b) in the above-identified application. Applicants were advised that the patent term adjustment to date is 281 days. On January 23, 2009, applicants timely[1] filed the instant application for patent term adjustment. Applicants dispute the reduction of 348 days, pursuant to 37 CFR 1.704(b), for applicant delay in filing a response to the Office action mailed January 22, 2007 on April 4, 2008, three months and 348 days later. Applicants maintain that the Office action mailed January 22, 2007 was never received. Rather, due to Office error, the Office action was mailed to an incorrect address. The Office action was subsequently re-mailed to the

[1] Office records show that the Issue Fee payment was also received on January 23, 2009.

same incorrect address on June 4, 2007, and was not received. On March 21, 2008, the Office action was mailed to the correct address, and within three months, applicants timely filed the response to the Office action as re-mailed for the second time on April 4, 2008.

Applicants state that any patent issuing from the application is not subject to a terminal disclaimer.

The application history has been reviewed and it has been determined that the initial patent term adjustment of 281 days is incorrect. The record supports a conclusion that the mailing of the Office action to an incorrect address on two occasions was due to an Office error. In this instance, applicants are correct that the delay in responding to the Office action should be calculated based on the date of the Second Restarted Response Period and not based on the date of the mailing of the original Office action. As their response was received within three months of the Second Letter Restarting Period for Response (the second re-mailed Office action, which was sent on March 21, 2008), there was no applicant delay within the meaning of § 1.704(b). The period of reduction of 348 days has been removed.

In view thereof, the correct patent term adjustment at the time of the mailing of the notice of allowance is six hundred and twenty-nine (629) days.

Submission of the $200.00 fee set forth in 37 CFR 1.18(e) is acknowledged. No additional fee is required.

The Office of Data Management has been advised of this decision. The application is, thereby, being forwarded to the Office of Data Management for issuance of the patent.

Telephone inquiries regarding this matter should be directed to Senior Attorney Paul Shanoski at (571) 272-3225.

Nancy Johnson
Senior Petitions Attorney
Office of Petitions

Enclosure: Copy of updated PAIR screen

PTA Calculations for Application: 10/790857			
Application Filing Date:	03/03/2004	PTO Delay (PTO):	629
Issue Date of Patent:		Three Years:	0
Pre-Issue Petitions:	0	Applicant Delay (APPL):	348
Post-Issue Petitions:	0	Total PTA (days):	629
PTO Delay Adjustment:	348		

File Contents History

Number	Date	Contents Description	PTO	APPL	START
69	08/27/2009	ADJUSTMENT OF PTA CALCULATION BY PTO	348		
61	10/24/2008	MAIL NOTICE OF ALLOWANCE			
60	10/23/2008	ISSUE REVISION COMPLETED			
59	10/23/2008	DOCUMENT VERIFICATION			
58	10/23/2008	NOTICE OF ALLOWANCE DATA VERIFICATION COMPLETED			
57	10/23/2008	CASE DOCKETED TO EXAMINER IN GAU			
56	10/23/2008	NOTICE OF ALLOWABILITY			
52	08/19/2008	SUBSTITUTE SPECIFICATION FILED			
51	09/10/2008	DATE FORWARDED TO EXAMINER			
50	08/19/2008	RESPONSE AFTER NON-FINAL ACTION			
49	05/19/2008	MAIL NON-FINAL REJECTION			
48	05/19/2008	NON-FINAL REJECTION			
42	04/18/2008	DATE FORWARDED TO EXAMINER			
41	04/04/2008	RESPONSE TO ELECTION / RESTRICTION FILED		348	34
40	03/21/2008	MAIL NOTICE OF RESTARTED RESPONSE PERIOD			
39	03/20/2008	LETTER RESTARTING PERIOD FOR RESPONSE (I.E. LETTER RE: REFERENCES)			
38	03/18/2008	CASE DOCKETED TO EXAMINER IN GAU			
37	10/02/2007	CASE DOCKETED TO EXAMINER IN GAU			
36	06/04/2007	MAIL NOTICE OF RESTARTED RESPONSE PERIOD			
35	06/02/2007	LETTER RESTARTING PERIOD FOR RESPONSE (I.E. LETTER RE: REFERENCES)			
34	01/22/2007	MAIL RESTRICTION REQUIREMENT	629		-1
33	01/16/2007	REQUIREMENT FOR RESTRICTION / ELECTION			

32	01/09/2007	CASE DOCKETED TO EXAMINER IN GAU			
31	07/06/2004	INFORMATION DISCLOSURE STATEMENT CONSIDERED			
30	09/02/2004	INFORMATION DISCLOSURE STATEMENT CONSIDERED			
29	09/08/2004	INFORMATION DISCLOSURE STATEMENT CONSIDERED			
28	10/25/2006	TRANSFER INQUIRY TO GAU			
27	08/01/2006	CASE DOCKETED TO EXAMINER IN GAU			
26	03/22/2006	CASE DOCKETED TO EXAMINER IN GAU			
25	03/21/2006	CASE DOCKETED TO EXAMINER IN GAU			
24	12/13/2005	CASE DOCKETED TO EXAMINER IN GAU			
23	06/22/2005	CASE DOCKETED TO EXAMINER IN GAU			
22	03/31/2005	CORRESPONDENCE ADDRESS CHANGE			
21	03/03/2004	REQUEST FOR FOREIGN PRIORITY (PRIORITY PAPERS MAY BE INCLUDED)			
20	03/30/2005	IFW TSS PROCESSING BY TECH CENTER COMPLETE			
19	03/30/2005	CASE DOCKETED TO EXAMINER IN GAU			
18	10/18/2004	TRANSFER INQUIRY TO GAU			
17.7	09/08/2004	INFORMATION DISCLOSURE STATEMENT (IDS) FILED			
17	09/08/2004	INFORMATION DISCLOSURE STATEMENT (IDS) FILED			
16	09/02/2004	REFERENCE CAPTURE ON IDS			
15.7	09/02/2004	INFORMATION DISCLOSURE STATEMENT (IDS) FILED			
15	09/02/2004	INFORMATION DISCLOSURE STATEMENT (IDS) FILED			
14.7	07/06/2004	INFORMATION DISCLOSURE STATEMENT (IDS) FILED			
14	07/06/2004	INFORMATION DISCLOSURE STATEMENT (IDS) FILED			
13	08/05/2004	TRANSFER INQUIRY TO GAU			
12	08/04/2004	APPLICATION RETURN FROM OIPE			
11	08/04/2004	APPLICATION RETURN TO OIPE			
10	08/03/2004	APPLICATION DISPATCHED FROM OIPE			
9	08/04/2004	APPLICATION IS NOW COMPLETE			
8	07/06/2004	ADDITIONAL APPLICATION FILING FEES			
		A STATEMENT BY ONE OR MORE INVENTORS			

6	07/06/2004	SATISFYING THE REQUIREMENT UNDER 35 USC 115, OATH OF THE APPLIC			
5	05/24/2004	NOTICE MAILED--APPLICATION INCOMPLETE--FILING DATE ASSIGNED			
4	04/03/2004	CASE CLASSIFIED BY OIPE			
3	04/03/2004	CLEARED BY OIPE CSR			
2	03/22/2004	IFW SCAN & PACR AUTO SECURITY REVIEW			
1	03/03/2004	INITIAL EXAM TEAM NN			

Search Another: Application# Search

EXPLANATION OF PTA CALCULATION

EXPLANATION OF PTE CALCULATION

To go back, right click here and select Back. To go forward, right click here and select Forward. To refresh, right click here and select Refresh.

Back to OASIS | Home page

UNITED STATES PATENT AND TRADEMARK OFFICE

Commissioner for Patents
United States Patent and Trademark Office
P.O. Box 1450
Alexandria, VA 22313-1450
www.uspto.gov

STEIN, McEWEN & BUI, LLP
1400 EYE STREET NW
SUITE 300
WASHINGTON, DC 20005

COPY MAILED

FEB 0 2 2007

OFFICE OF PETITIONS

In re Application of	:	
Du-seop Yoon et al	:	
Application No. 10/790,861	:	DECISION GRANTING PETITION
Filed: March 3, 2004	:	UNDER 37 CFR 1.313(c)(2)
Attorney Docket No. 1293.1279C2	:	

This is a decision on the petition, filed February 1, 2007, under 37 CFR 1.313(c)(2) to withdraw the above-identified application from issue after payment of the issue fee.

The petition is **GRANTED**.

The above-identified application is withdrawn from issue for consideration of a submission under 37 CFR 1.114 (request for continued examination). See 37 CFR 1.313(c)(2).

Petitioner is advised that the issue fee paid on January 12, 2007 in the above-identified application cannot be refunded. If, however, the above-identified application is again allowed, petitioner may request that it be applied towards the issue fee required by the new Notice of Allowance.[1]

Telephone inquiries should be directed to the undersigned at (571) 272-3218.

This matter is being referred to Technology Center AU 2627 for processing of the request for continued examination under 37 CFR 1.114 and for consideration of the concurrently filed amendment.

Frances Hicks
Petitions Examiner
Office of Petitions

C:\Documents and Settings\FHicks\My Documents\470\Feb10\790861.wpd

---

[1] *The request to apply the issue fee to the new Notice may be satisfied by completing and returning the new Part B – Fee(s) Transmittal Form (along with any balance due at the time of submission). Petitioner is advised that the Issue Fee Transmittal Form must be completed and timely submitted to avoid abandonment.*

UNITED STATES PATENT AND TRADEMARK OFFICE

Commissioner for Patents
United States Patent and Trademark Office
P.O. Box 1450
Alexandria, VA 22313-1450
www.uspto.gov

ARNOLD INTERNATIONAL
P O BOX 129
GREAT FALLS, VA 22066

COPY MAILED

SEP 22 2005

OFFICE OF PETITIONS

In re Application of	:	
Hiromitsu Yamakawa	:	
Application No. 10/790,882	:	DECISION GRANTING PETITION
Filed: March 3, 2004	:	UNDER 37 CFR 1.313(c)(2)
Attorney Docket No. 25-268	:	

This is a decision on the petition, filed September 21, 2005, under 37 CFR 1.313(c)(2) to withdraw the above-identified application from issue after payment of the issue fee.

The petition is **GRANTED**.

The above-identified application is withdrawn from issue for consideration of a submission under 37 CFR 1.114 (request for continued examination). See 37 CFR 1.313(c)(2).

Petitioner is advised that the issue fee paid on August 17, 2005 in the above-identified application cannot be refunded. If, however, the above-identified application is again allowed, petitioner may request that it be applied towards the issue fee required by the new Notice of Allowance.[1]

In view of the nonacceptance of the Revocation of Power of Attorney and New Power of Attorney, filed September 16, 2005, a courtesy copy of this decision is being mailed to petitioner herein.[2] However, until the Office receives an acceptable power of attorney meeting the criteria set forth in 37 CFR 3.73(b), all future correspondence will be held with the above-noted address of record.

---

[1] *The request to apply the issue fee to the new Notice may be satisfied by completing and returning the new Issue Fee Transmittal Form PTOL-85(b), which includes the following language thereon: "Commissioner for Patents is requested to apply the Issue Fee and Publication Fee (if any) or re-apply any previously paid issue fee to the application identified above." Petitioner is advised that, whether a fee is indicated as being due or not, the Issue Fee Transmittal Form* ***must*** *be completed and timely submitted to avoid abandonment. Note the language in bold text on the first page of the Notice of Allowance and Fee(s) Due (PTOL-85).*

[2] The nonacceptance of the power of attorney has been mailed under separate cover.

Telephone inquiries should be directed to the undersigned at (571) 272-3218.

This matter is being referred to Technology Center AU 2873 for processing of the request for continued examination under 37 CFR 1.114 and for consideration of the Information Disclosure Statement.

Frances Hicks
Petitions Examiner
Office of Petitions

cc:

Customer Number 02292
Birch Stewart Kolasch & Birch LLP
P O Box 747
Falls Church, VA 22040-0747

UNITED STATES PATENT AND TRADEMARK OFFICE

Commissioner for Patents
United States Patent and Trademark Office
P.O. Box 1450
Alexandria, VA 22313-1450
www.uspto.gov

SALIWANCHIK LLOYD & SALIWANCHIK
A PROFESSIONAL ASSOCIATION
PO BOX 142950
GAINESVILLE FL 32614-2950

COPY MAILED

SEP 12 2006

OFFICE OF PETITIONS

In re Application of :
Mansur Yalpani :
Application No. 10/790,884 : DECISION ON PETITION
Filed: March 1, 2004 : TO WITHDRAW
Attorney Docket No. CRB-104XC1 : FROM RECORD

This is a decision on the Request to Withdraw as attorney or agent of record under 37 C.F.R. § 1.36(b), filed October 28, 2005.

The request is **APPROVED**.

A grantable request to withdraw as attorney/agent of record must be signed by every attorney/agent seeking to withdraw or contain a clear indication that one attorney is signing on behalf of attorneys/agents associated with customer number 23557. A request to withdraw will not be approved unless at least 30 (thirty) days would remain between the date of approval and the later of the expiration date of a time to file a response or the expiration date of the maximum time period which can be extended under 37 C.F.R. § 1.136(a).

David Saliwanchik signed the request on behalf of all attorneys of record.

David Saliwanchik and all attorneys/agents associated with application have been withdrawn.

Applicant is reminded that there is no attorney of record at this time.

The request to change the correspondence address of record has been accepted. All future communications from the Office will be directed to the first copied address below until otherwise properly notified by the applicant.

Telephone inquiries concerning this decision should be directed to Charles Smoot at 571-272-3299.

David Bucci
Petitions Examiner
Office of Petitions

Cc: Mansur Yalpani
6324 Ferris Square
San Diego, CA 92121

UNITED STATES PATENT AND TRADEMARK OFFICE

UNITED STATES DEPARTMENT OF COMMERCE
United States Patent and Trademark Office
Address: COMMISSIONER FOR PATENTS
P.O. Box 1450
Alexandria, Virginia 22313-1450
www.uspto.gov

GIFFORD, KRASS, SPRINKLE,ANDERSON & CITKOWSKI, P.C
PO BOX 7021
TROY, MI 48007-7021

Mail Date: 04/21/2010

Applicant	: Fengxia Qi	: DECISION ON REQUEST FOR
Patent Number	: 7655236	: RECALCULATION of PATENT
Issue Date	: 02/02/2010	: TERM ADJUSTMENT IN VIEW
Appliction No	: 10/790,914	: OF WYETH AND NOTICE OF INTENT TO
Filed	: 03/02/2004	: ISSUE CERTIFICATE OF CORRECTION
		:

The Request for Recalculation is **GRANTED** to the extent indicated.

The patent term adjustment has been determined to be **910** days. The USPTO will *sua sponte* issue a certificate of correction reflecting the amount of PTA days determined by the recalculation.

Prior to the issuance of the certificate of correction, the USPTO will afford patentee an opportunity to be heard and request reconsideration. Accordingly, patentee has **one month or thirty (30) days**, whichever is longer, to file a request for reconsideration of this patent term adjustment calculation. See 35 U.S.C. 154(b)(3)(B)(ii) and 37 CFR 1.322(a)(4). No extensions of time will be granted under 37 CFR 1.136.

Patentee should use document code PET.OP if electronically filing a request for reconsideration of this patent term adjustment calculation. The patentee must also include the information required by 37 CFR 1.705(b)(2) and the fee required by 37 CFR 1.18(e). If patentee does not file a timely request for reconsideration of this patent term adjustment calculation including the information required by 37 CFR 1.705(b)(2) and the fee required by 37 CFR 1.18(e), the USPTO will issue a certificate of correction reflecting the PTA determination noted above.

Patentee should be aware that in order to preserve the right to review in the United States District Court for the District of Columbia of the USPTO patent term adjustment determination, patentee must ensure that he or she also take the steps required under 35 U.S.C. 154(b)(4)(A) in a timely manner. Nothing in the request for recalculation should be construed as providing an alternative time frame for commencing a civil action under 35 U.S.C. 154(b)(4)(A).

Any questions concerning this decision should be directed to the Office of Patent Legal Administration at 571-272-7702.

UNITED STATES PATENT AND TRADEMARK OFFICE

COMMISSIONER FOR PATENTS
UNITED STATES PATENT AND TRADEMARK OFFICE
P.O. BOX 1450
ALEXANDRIA, VA 22313-1450
www.uspto.gov
DIW Dec-05

WILMER CUTLER PICKERING HALE AND DORR LLP
399 PARK AVENUE
NEW YORK NY 10022

COPY MAILED

DEC 27 2005

OFFICE OF PETITIONS

In re Application of	:	
Vierheilig et al.	:	DECISION ON PETITIONS
Application No. 10/790,920	:	UNDER 37 CFR 1.78(a)(3)
Filed: 2 March, 2004	:	AND 37 CFR 1.78(a)(6)
Atty Docket No. 0113222-150	:	

This is a decision on the paper filed on 28 November, 2005, which is treated as petitions under 37 CFR §§ 1.78(a)(3) and 1.78(a)(6), to accept an unintentionally delayed claim under 35 U.S.C. §§ 120, and 119(e) for the benefit of the prior-filed applications set forth in the concurrently filed amendment.

The petitions are **Granted**.

A petition for acceptance of a claim for late priority under 37 CFR §§ 1.78(a)(3) and 1.78(a)(6) is only applicable to those applications filed on or after November 29, 2000. Further, the petition is appropriate only after the expiration of the period specified in 37 CFR §§ 1.78(a)(2)(ii) and 1.78(a)(5)(ii). In addition, the petition under 37 CFR §§ 1.78(a)(3) and 1.78(a)(6) must be accompanied by:

(1) the reference required by 35 U.S.C. §§ 120 and 119(e) and 37 CFR §§ 1.78(a)(2)(i) and 1.78(a)(5)(i) of the prior-filed application, unless previously submitted;
(2) the surcharge set forth in § 1.17(t); and
(3) a statement that the entire delay between the date the claim was due under 37 CFR §§ 1.78(a)(2)(ii) and 1.78(a)(5)(ii) and the date the claim was filed was unintentional. The Commissioner may require additional where there is a question whether the delay was unintentional.

The instant nonprovisional application was filed after November 29, 2000, and the claim herein for the benefit of priority to the prior-filed applications is submitted after expiration of the period specified in 37 CFR §§ 1.78(a)(2)(ii) and 1.78(a)(5)(ii). Therefore, this is a proper petition under 37 CFR §§ 1.78(a)(3) and 1.78(a)(6).

The instant nonprovisional application was pending at the time of filing of the reference to the prior-filed provisional application as required by 37 CFR 1.78(a)(5)(ii). Additionally, intermediate nonprovisional Application No. 09/256,621 was filed within twelve months of the filing date of the prior-filed provisional application, Application No. 60/075,680, which was filed on 24 February, 1998, for which priority is claimed.

The petition complies with the requirements for a grantable petition under 37 CFR §§1.78(a)(3) and 1.78(a)(6) in that (1) a reference to the above-noted applications has been included in an amendment to the first sentence of the specification following the title and in an Application Data Sheet, as provided by 37 CFR §§ 1.78(a)(2)(iii) and 1.78(a)(5)(iii); (2) the surcharge fee required by 37 CFR 1.17(t) has been submitted; and (3) the petition contains an adequate statement of unintentional delay. Accordingly, having found that the instant petition for acceptance of an unintentionally delayed claim for the benefit of priority under 35 U.S.C. §§ 120 and 119(e) to the above-noted applications satisfies the conditions of 37 CFR §§ 1.78(a)(3) and 1.78(a)(6), the petition is granted.

37 CFR 1.78(a)(3) and 1.78(a)(6) require a statement that the entire delay between the date the claim was due under 37 CFR 1.78(a)(2)(ii) and 1.78(a)(5)(ii) and the date the claim was filed was unintentional. Since the statement in the petition varies from the required language, the statement will be construed as the statement required by 37 CFR 1.78(a)(3) and 1.78(a)(6). Petitioner must notify the Office if this is not a correct reading of the statement appearing in the petition.

The granting of the petition to accept the delayed benefit claim to the prior-filed application(s) under 37 CFR §§ 1.78(a)(3) and 1.78(a)(6) should <u>not</u> be construed as meaning that the instant application is entitled to the benefit of the filing date of the prior-filed application(s). In order for the instant application to be entitled to the benefit of the prior-filed application(s), all other requirements under 35 U.S.C. §120 and 1.78(a)(1) and

(a)(2) and under 35 U.S.C. §119(e) and 37 CFR 1.78(a)(4) and (a)(5) must be met. Similarly, the fact that the corrected Filing Receipt accompanying this decision on petition includes the prior-filed application(s) should not be construed as meaning that applicant is entitled to the claim for benefit of priority to the prior-filed application(s) noted thereon. Accordingly, the examiner will, in due course, consider this benefit claim and determine whether the instant application is entitled to the benefit of the earlier filing date.

A corrected Filing Receipt, which includes the priority claim to the prior-filed applications, accompanies this decision on petition.

Any questions concerning this matter may be directed to Senior Petitions Attorney Douglas I. Wood at (571) 272-3231. All other inquiries concerning either the examination procedures or status of the application should be directed to the Technology Center.

This application is being forwarded to Technology Center Art Unit 1754 for appropriate action on the amendment submitted 28 November, 2005, including consideration by the examiner of the claim for the benefit of priority to the prior-filed applications.

Frances Hicks
Lead Paralegal
Office of Petitions
Office of the Deputy Commissioner
for Patent Examination Policy

Attachment: Corrected Filing Receipt

UNITED STATES PATENT AND TRADEMARK OFFICE

Commissioner for Patents
United States Patent and Trademark Office
P.O. Box 1450
Alexandria, VA 22313-1450
www.uspto.gov

Dean Alderucci
Walker Digital Management, LLC
5 High Ridge Park
Stamford, CT 06905

COPY MAILED

JUL 13 2004

OFFICE OF PETITIONS

In re Application of	:	
Walker et al.	:	DECISION ACCORDING
Application No. 10/790,934	:	STATUS UNDER
Filed: March 2, 2004	:	37 CFR 1.47(a)
Attorney Docket No. 03-026	:	
For: Method and Apparatus For Providing Regular Entrance Into a Bonus Game	:	

This is in response to the petition under 37 CFR 1.47(a), filed June 14, 2004.

The petition is granted.

Petitioner has shown that the non-signing inventor has refused to join in the filing of the above-identified application after having been presented with the application papers. Specifically, the statement of facts of Dean P. Alderucci establishes that the inventor was mailed the application papers, including the specification, claims and drawings, but refused the request that he sign the declaration.

The above-identified application and papers have been reviewed and found in compliance with 37 CFR 1.47(a). This application is hereby accorded Rule 1.47(a) status.

As provided in Rule 1.47(c), this Office will forward notice of this application's filing to the non-signing inventors at the addresses given in the present petition. Notice of the filing of this application will also be published in the Official Gazette.

The application file is being forwarded to the Office of Initial Patent Examination.

Telephone inquiries regarding this decision should be directed to the undersigned at (703) 306-5589.

Christina Tartera Donnell

Christina Tartera Donnell
Senior Petitions Attorney
Office of Petitions

UNITED STATES PATENT AND TRADEMARK OFFICE

Commissioner for Patents
United States Patent and Trademark Office
P.O. Box 1450
Alexandria, VA 22313-1450
www.uspto.gov

DENNIS S. FERNANDEZ
FERNANDEZ & ASSOCIATES LLP
1047 EL CAMINO REAL
SUITE 201
MENLO PARK, CA 94025

COPY MAILED

MAY 2 8 2009

OFFICE OF PETITIONS

In re Application of	:	
Call et al.	:	DECISION ON PETITION
Application No. 10/790,936	:	TO WITHDRAW
Filed: March 1, 2004	:	FROM RECORD
Attorney Docket No. MESO0072	:	

This is a decision on the Request to Withdraw as attorney or agent of record under 37 C.F.R. § 1.36(b), filed January 13, 2006.

The request is **NOT APPROVED** because it is moot.

A review of the file record indicates that on January 20, 2006 the power of attorney to Fernandez & Associates LLP was revoked by the assignee of the patent application. Accordingly, the request to withdraw under 37 C.F.R. § 1.36(b) is moot.

All future communications from the Office will be directed to the below-listed address until otherwise notified by applicant.

Telephone inquires concerning this decision should be directed to the undersigned at 571-272-7751. All other inquires concerning either the examination or status of the application should be directed to the Technology Center.

Joan Olszewski
Petitions Examiner
Office of Petitions

cc: Law Offices of Ronald M Anderson
600 108th Ave, NE
Suite 507
Bellevue WA 98004

UNITED STATES PATENT AND TRADEMARK OFFICE

Commissioner for Patents
United States Patent and Trademark Office
P.O. Box 1450
Alexandria, VA 22313-1450
www.uspto.gov

TIMOTHY M HONEYCUTT ATTORNEY AT LAW
P O BOX 1577
CYPRESS TX 77410

COPY MAILED

MAY 3 1 2007

OFFICE OF PETITIONS

In re Patent No. 7,176,095	:	
Issued: February 13, 2007	:	
Application No. 10/790,939	:	ON PETITION
Filed: March 1, 2004	:	
Attorney Docket No. AMDI:133\HON	:	

This is a decision on the petition under 37 CFR 1.182, filed April 10, 2007, requesting issuance of a duplicate Letters Patent for the above-identified application.

The petition is **GRANTED**.

The Publishing Division is directed to issue a duplicate Letters Patent.

Any questions concerning this matter may be directed to the undersigned at (571) 272-3206. Any questions concerning issuance of the duplicate Letters Patent should be directed to Krystal Paige at (703) 308-9250.

A copy of this decision is being forwarded to Publishing Division for issuance of a duplicate Letters Patent.

Liana Walsh
Petitions Examiner
Office of Petitions

cc: Krystal Paige, P/OPPD, South Tower 8C41 (FAX 571-273-9756)

UNITED STATES PATENT AND TRADEMARK OFFICE

Commissioner for Patents
United States Patent and Trademark Office
P.O. Box 1450
Alexandria, VA 22313-1450
www.uspto.gov

JAECKLE FLEISCHMANN & MUGEL, LLP
190 Linden Oaks
Rochester, New York 14625-2812
Washington, DC 20007

COPY MAILED

APR 25 2008

In re Application of :
William R. Wilson, et al :
Application No. 10/790,943 : DECISION ON PETITION
Filed: March 2, 2004 :
Attorney Docket No. 87792.355006 US1 :

This is a decision on the renewed petition filed October 31, 2007, requesting under 37 CFR 1.182 that the acceptance of the terminal disclaimer filed October 11, 2007 be withdrawn.

The petition is **GRANTED**.

Petitioners assert that, as the claims for which the aforementioned terminal disclaimer was originally proffered have now been cancelled to remove the basis for the previous obviousness-type double patenting rejection, there is no further need for the disclaimer to remain recorded against this application. The undersigned has consulted with the examiner in charge of this application, and has found that the examiner concurs with petitioners' assertion. Specifically, the petitioner has eliminated antimetabolites as an option in the recited Markush group. The examiner agrees with petitioner that antimetabolites and topoisomerase I inhibitors belong to different classes of compounds, having distinct mechanisms of action, and are thus not obvious over each other.

Accordingly, the terminal disclaimer is withdrawn. USPTO records for the above-identified application have been changed consistent with this decision.

Telephone inquiries related to this decision should be addressed to Thurman K. Page at (571) - 272-0602.

This application has been forwarded to TC1600 for further processing.

Thurman K. Page
Petitions Examiner
Office of Petitions

0UNITED STATES PATENT AND TRADEMARK OFFICE

Commissioner for Patents
United States Patent and Trademark Office
P.O. Box 1450
Alexandria, VA 22313-1450
www.uspto.gov

FOLEY & LARDNER LLP
975 PAGE MILL ROAD
PALO ALTO, CA 94304

MAILED

APR 14 2010

OFFICE OF PETITIONS

In re Application of	:	
William R. Wilson, et al.	:	
Application No. 10/790,943	:	DECISION ON PETITION
Filed: March 2, 2004	:	TO WITHDRAW
Attorney Docket No. 093397-0501	:	FROM RECORD
	:	

This is a decision on the Request to Withdraw as attorney or agent of record under 37 C.F.R. § 1.36(b), filed February 3, 2010.

The request is **APPROVED**.

A grantable request to withdraw as attorney/agent of record must be signed by every attorney/agent seeking to withdraw or contain a clear indication that one attorney is signing on behalf of another/others. A request to withdraw will not be approved unless at least 30 (thirty) days would remain between the date of approval and the later of the expiration date of a time to file a response or the expiration date of the maximum time period which can be extended under 37 C.F.R. § 1.136(a).

The request was signed by Antoinette F. Konski on behalf of all attorneys of record. All attorneys/agents have been withdrawn. Applicant is reminded that there is no attorney of record at this time.

All future correspondence will be directed to the first named inventor William R. Wilson at the address indicated below.

There is an outstanding Office action mailed October 21, 2009 that requires a reply from the applicant.

Telephone inquiries concerning this decision should be directed to Terri Johnson at 571-272-2991.

Terri Johnson
Petitions Examiner
Office of Petitions

cc: **William R. Wilson**
199 Smith Road
Waiuku, RD2
New Zealand

UNITED STATES PATENT AND TRADEMARK OFFICE

UNITED STATES DEPARTMENT OF COMMERCE
United States Patent and Trademark Office
Address: COMMISSIONER FOR PATENTS
P.O. Box 1450
Alexandria, Virginia 22313-1450
www.uspto.gov

APPLICATION NUMBER	FILING OR 371(C) DATE	FIRST NAMED APPLICANT	ATTY. DOCKET NO./TITLE
10/790,943	03/02/2004	William R. Wilson	093397-0501

CONFIRMATION NO. 2176

POWER OF ATTORNEY NOTICE

38706
FOLEY & LARDNER LLP
975 PAGE MILL ROAD
PALO ALTO, CA 94304

Date Mailed: 04/12/2010

NOTICE REGARDING CHANGE OF POWER OF ATTORNEY

This is in response to the Power of Attorney filed 02/03/2010.

- The withdrawal as attorney in this application has been accepted. Future correspondence will be mailed to the new address of record. 37 CFR 1.33.

/tsjohnson/

Office of Data Management, Application Assistance Unit (571) 272-4000, or (571) 272-4200, or 1-888-786-0101

UNITED STATES PATENT AND TRADEMARK OFFICE

UNITED STATES DEPARTMENT OF COMMERCE
United States Patent and Trademark Office
Address: COMMISSIONER FOR PATENTS
P.O. Box 1450
Alexandria, Virginia 22313-1450
www.uspto.gov

IBM CORPORATION
LOTUS SOFTWARE
ONE ROGERS STREET
CAMBRIDGE, MA 02142

Mail Date: 04/20/2010

Applicant	: Mary Ellen Zurko	: DECISION ON REQUEST FOR
Patent Number	: 7607172	: RECALCULATION of PATENT
Issue Date	: 10/20/2009	: TERM ADJUSTMENT IN VIEW
Appliction No	: 10/790,944	: OF WYETH AND NOTICE OF INTENT TO
Filed	: 03/02/2004	: ISSUE CERTIFICATE OF CORRECTION
		:

The Request for Recalculation is **GRANTED** to the extent indicated.

The patent term adjustment has been determined to be **1286** days. The USPTO will *sua sponte* issue a certificate of correction reflecting the amount of PTA days determined by the recalculation.

Prior to the issuance of the certificate of correction, the USPTO will afford patentee an opportunity to be heard and request reconsideration. Accordingly, patentee has **one month or thirty (30) days**, whichever is longer, to file a request for reconsideration of this patent term adjustment calculation. See 35 U.S.C. 154(b)(3)(B)(ii) and 37 CFR 1.322(a)(4). No extensions of time will be granted under 37 CFR 1.136.

Patentee should use document code PET.OP if electronically filing a request for reconsideration of this patent term adjustment calculation. The patentee must also include the information required by 37 CFR 1.705(b)(2) and the fee required by 37 CFR 1.18(e). If patentee does not file a timely request for reconsideration of this patent term adjustment calculation including the information required by 37 CFR 1.705(b)(2) and the fee required by 37 CFR 1.18(e), the USPTO will issue a certificate of correction reflecting the PTA determination noted above.

Patentee should be aware that in order to preserve the right to review in the United States District Court for the District of Columbia of the USPTO patent term adjustment determination, patentee must ensure that he or she also take the steps required under 35 U.S.C. 154(b)(4)(A) in a timely manner. Nothing in the request for recalculation should be construed as providing an alternative time frame for commencing a civil action under 35 U.S.C. 154(b)(4)(A).

Any questions concerning this decision should be directed to the Office of Patent Legal Administration at 571-272-7702.

UNITED STATES PATENT AND TRADEMARK OFFICE

UNITED STATES DEPARTMENT OF COMMERCE
United States Patent and Trademark Office
Address: COMMISSIONER FOR PATENTS
P.O. Box 1450
Alexandria, Virginia 22313-1450
www.uspto.gov

IBM CORPORATION
LOTUS SOFTWARE
ONE ROGERS STREET
CAMBRIDGE, MA 02142

Mail Date: 05/17/2010

Applicant : Mary Ellen Zurko
Patent Number : 7607172
Issue Date : 10/20/2009
Application No: 10/790,944
Filed : 03/02/2004

: NOTICE CONCERNING IMPROPER
: CALCULATION OF PATENT TERM
: ADJUSTMENT BASED UPON USPTO
: IMPROPERLY MEASURING REDUCTION
: PERIOD UNDER 37 CFR 1.704(c)(10).

The United States Patent and Trademark Office (USPTO) discovered that in processing the recent recalculation decisions mailed in response to patentee's filed Request for Recalculation of Patent Term Adjustment in view of Wyeth, the USPTO improperly measured the reduction period for reductions under 37 CFR 1.704(c)(10). Pursuant to 37 CFR 1.704(c)(10), patentee's reduction begins on the date of filing the amendment under 37 CFR 1.312 ("1.312 amendment") or other related paper and ends on the date that the Office mails a response to the filing of the 1.312 amendment or other paper. It has been discovered that during the recalculation, the calculation failed to the limit the reduction to the mail date of the response to the 1.312 amendment or other paper. Accordingly, patentee's reductions were greater than warranted.

This notice **VACATES** the previous GRANTED request for recalculation and provides patentee with a revised GRANTED recalculation.

The patent term adjustment has been determined to be **1321** days. The USPTO will *sua sponte* issue a certificate of correction reflecting the amount of patent term adjustment (PTA) days determined by the recalculation.

Prior to the issuance of the certificate of correction, the USPTO will afford patentee an opportunity to be heard and request reconsideration. Accordingly, patentee has **one month or thirty (30) days** from the mail date of this notice, whichever is longer, to file a request for reconsideration of this PTA calculation. See 35 U.S.C. § 154(b)(3)(B)(ii) and 37 CFR 1.322(a)(4).

Patentee should use document code PET.OP if electronically filing a request for reconsideration of this PTA calculation. The patentee must also include the information required by 37 CFR 1.705(b)(2), and the fee required by 37 CFR 1.18(e). If patentee does not file a timely request for reconsideration of this PTA calculation, including the information required by 37 CFR 1.705(b)(2) and the fee required by 37 CFR 1.18(e), the USPTO will issue a certificate of correction reflecting the PTA determination noted above.

Patentee should be aware that in order to preserve the right of review of the USPTO's PTA determination in the United States District Court for the District of Columbia, patentee must ensure that the steps required under 35 U.S.C. § 154 (b)(4) are taken in a timely manner. Nothing in the request for recalculation should be construed as providing an alternative time frame for commencing a civil action under 35 U.S.C. § 154(b)(4).

UNITED STATES PATENT AND TRADEMARK OFFICE

Commissioner for Patents
United States Patent and Trademark Office
P. O. Box 1450
Alexandria, VA 22313-1450
www.uspto.gov

COPY MAILED

JUN 0 4 2008

OFFICE OF PETITIONS

DLA PIPER US LLP
2000 UNIVERSITY AVENUE
E. PALO ALTO, CA 94303-2248

In re Application of :
Liam Scanlan :
Application No. 10/790,955 : ON PETITION
Filed: March 1, 2004 :
Attorney Docket No. 2103175-991121 :

This is a decision on the petition under 37 CFR 1.137(b), filed February 6, 2008, to revive the above-identified application.

The petition is **GRANTED.**

The application became abandoned for failure to reply in a timely manner to the Restriction Requirement mailed December 8, 2005 which set a shortened statutory period for reply of one (1) month or thirty (30) days (whichever is later). No extensions of time under the provisions of 37 CFR 1.136(a) were obtained. Accordingly, the application became abandoned on January 9, 2006.

Telephone inquiries concerning this decision should be directed to Irvin Dingle at (571) 272-3210.

This matter is being referred to Technology Center AU 2162 for further processing.

Irvin Dingle
Petitions Examiner
Office of Petitions

UNITED STATES PATENT AND TRADEMARK OFFICE

Commissioner for Patents
United States Patent and Trademark Office
P.O. Box 1450
Alexandria, VA 22313-1450
www.uspto.gov

EDWARD D. MANZO
COOK ALEX McFARRON MANZO
CUMMINGS & MEHLER, LTD.
200 WEST ADAMS STREET, SUITE 2850
CHICAGO, IL 60606

COPY MAILED

JUL 2 9 2005

OFFICE OF PETITIONS

In re Application of :
Junya Maruyama et al :
Application No. 10/790,962 : DECISION GRANTING PETITION
Filed: March 2, 2004 : UNDER 37 CFR 1.313(c)(2)
Attorney Docket No. 0553-0313-01 :

This is a decision on the petition, filed July 28, 2005, under 37 CFR 1.313(c)(2) to withdraw the above-identified application from issue after payment of the issue fee.

The petition is **GRANTED**.

The above-identified application is withdrawn from issue for consideration of a submission under 37 CFR 1.114 (request for continued examination). See 37 CFR 1.313(c)(2).

Petitioner is advised that the issue fee paid on July 6, 2005 in the above-identified application cannot be refunded. If, however, the above-identified application is again allowed, petitioner may request that it be applied towards the issue fee required by the new Notice of Allowance.[1]

Telephone inquiries should be directed to the undersigned at (571) 272-3218.

This matter is being referred to Technology Center AU 2812 for processing of the request for continued examination under 37 CFR 1.114 and for consideration of the Information Disclosure Statement.

Frances Hicks
Petitions Examiner
Office of Petitions

---

[1] *The request to apply the issue fee to the new Notice may be satisfied by completing and returning the new Issue Fee Transmittal Form PTOL-85(b), which includes the following language thereon: "Commissioner for Patents is requested to apply the Issue Fee and Publication Fee (if any) or re-apply any previously paid issue fee to the application identified above." Petitioner is advised that, whether a fee is indicated as being due or not, the Issue Fee Transmittal Form* ***must*** *be completed and timely submitted to avoid abandonment. Note the language in bold text on the first page of the Notice of Allowance and Fee(s) Due (PTOL-85).*

UNITED STATES PATENT AND TRADEMARK OFFICE

UNITED STATES DEPARTMENT OF COMMERCE
United States Patent and Trademark Office
Address: COMMISSIONER FOR PATENTS
P.O. Box 1450
Alexandria, Virginia 22313-1450
www.uspto.gov

Attention: Eric D. Levinson
Imation Corp.
Legal Affairs
P.O. Box 64898
St. Paul, MN 55164-0898

Mail Date: 04/21/2010

Applicant	: Jathan D. Edwards	: DECISION ON REQUEST FOR
Patent Number	: 7600992	: RECALCULATION of PATENT
Issue Date	: 10/13/2009	: TERM ADJUSTMENT IN VIEW
Appliction No	: 10/790,965	: OF WYETH AND NOTICE OF INTENT TO
Filed	: 03/02/2004	: ISSUE CERTIFICATE OF CORRECTION
		:

The Request for Recalculation is **GRANTED** to the extent indicated.

The patent term adjustment has been determined to be **1615** days. The USPTO will *sua sponte* issue a certificate of correction reflecting the amount of PTA days determined by the recalculation.

Prior to the issuance of the certificate of correction, the USPTO will afford patentee an opportunity to be heard and request reconsideration. Accordingly, patentee has **one month or thirty (30) days**, whichever is longer, to file a request for reconsideration of this patent term adjustment calculation. See 35 U.S.C. 154(b)(3)(B)(ii) and 37 CFR 1.322(a)(4). No extensions of time will be granted under 37 CFR 1.136.

Patentee should use document code PET.OP if electronically filing a request for reconsideration of this patent term adjustment calculation. The patentee must also include the information required by 37 CFR 1.705(b)(2) and the fee required by 37 CFR 1.18(e). If patentee does not file a timely request for reconsideration of this patent term adjustment calculation including the information required by 37 CFR 1.705(b)(2) and the fee required by 37 CFR 1.18(e), the USPTO will issue a certificate of correction reflecting the PTA determination noted above.

Patentee should be aware that in order to preserve the right to review in the United States District Court for the District of Columbia of the USPTO patent term adjustment determination, patentee must ensure that he or she also take the steps required under 35 U.S.C. 154(b)(4)(A) in a timely manner. Nothing in the request for recalculation should be construed as providing an alternative time frame for commencing a civil action under 35 U.S.C. 154(b)(4)(A).

Any questions concerning this decision should be directed to the Office of Patent Legal Administration at 571-272-7702.

UNITED STATES PATENT AND TRADEMARK OFFICE

COMMISSIONER FOR PATENTS
UNITED STATES PATENT AND TRADEMARK OFFICE
P.O. BOX 1450
ALEXANDRIA, VA 22313-1450
www.uspto.gov

GARVEY SMITH NEHRBASS & NORTH, LLC
LAKEWAY 3, SUITE 3290
3838 NORTH CAUSEWAY BLVD.
METAIRIE, LA 70002

COPY MAILED

FEB 22 2008

OFFICE OF PETITIONS

In re Application of :
Norman R. Bourgeois :
Application No. 10/790,990 : ON PETITION
Filed: March 2, 2004 :
Attorney Docket No. C03092US (08395.7C7) :

This is a decision on the petition under 37 CFR 1.137(b), filed May 9, 2007, to revive the above-identified application.

The application became abandoned for failure to respond to the non-final Office action mailed March 7, 2006. A Notice of Abandonment was mailed on October 16, 2006.

The petition satisfies the requirements of 37 CFR 1.137(b), in that, petitioner has supplied (1) the reply in the form of an amendment, terminal disclaimer under 37 CFR 1.321 and $65 fee; (2) the petition fee of $750; and (3) a proper statement of unintentional delay. Therefore, the petition is **GRANTED**.

This application file is being referred to Technology Center Art Unit 1761 for further processing.

Telephone inquiries concerning this decision should be directed to the undersigned at (571) 272-3226.

Andrea Smith
Petitions Examiner
Office of Petitions

28 JUN 2005

UNITED STATES PATENT AND TRADEMARK OFFICE

COMMISSIONER FOR PATENTS
UNITED STATES PATENT AND TRADEMARK OFFICE
P.O. BOX 1450
ALEXANDRIA, VA 22313-1450
www.uspto.gov

Ciba Specialty Chemical Corporation
Patent Department
540 White Plains Road
P.O. Box 2005
Tarrytown, NY 10591

In re Application of :
FLISHER et al. : DECISION
Application no.: 10/791,012 :
Filing Date: 02 March 2004 :
Attorney Docket No.: GT/3-21923/A/AC/533/CONT :
For: DRIVE UNIT :

This decision is in response to applicants' "Petition for Suspension of Rules Under 37 CFR 1.183" filed in the United States Patent and Trademark Office (USPTO) on 06 October 2004, which is being treated as a Petition under 37 CFR 1.181. Applicants are requesting a corrected filing receipt. No petition fee is required.

The above-identified application received an Official Filing Receipt which indicated, "[t]his application is CON of 09/890,129 (filed) 08/02/2001* which is a (35 U.S.C.) 371 of PCT/EP01/00391 (filed) 01/15/2001. (*) Data provided by applicant is not consistent with PTO records."

Applicants state in the present petition that the parent application, 09/890,129, lists the 35 U.S.C. 371 date as August 2, 2001 but the application should have been accorded the filing date of July 27, 2001. According to PALM records, the parent application, has a 35 U.S.C. 371 date of 02 August 2001. Upon review of the Image File Wrapper, the parent application (09/890,129) was filed in the USPTO via United States Express Mail. In accordance with 37 CFR 1.10, parent application, 09/890,129, should have been accorded a 35 U.S.C. 371 date of 27 July 2001. Therefore, the filing receipt for the above-identified application will be corrected to read "This application is DIV of 09/890,129 filed 07/27/2001 which is a 371 of PCT/EP01/00391 filed 01/15/2001." Applicants' petition under 37 CFR 1.181 is **GRANTED**.

The application is being returned to the United States Designated/Elected Office (DO/EO/US) for processing in accordance with this decision, that is, for: (1) issuing a corrected filing receipt; (2) issuing a corrected Notification of Acceptance (Form/DO/EO/903); (3) correcting PALM database for application no. 09/890,129 and 10/791,012; and (4) forwarding a copy of this decision to 09/890,129.

Anthony Smith Anthony Smith
Attorney-Advisor
Office of PCT Legal Administration
Telephone: 571-272-3298
Fax: 571-273-0459

22 DEC 2004

UNITED STATES PATENT AND TRADEMARK OFFICE

COMMISSIONER FOR PATENTS
UNITED STATES PATENT AND TRADEMARK OFFICE
P.O. BOX 1450
ALEXANDRIA, VA 22313-1450
www.uspto.gov

CIBA SPECIALTY CHEMICALS CORPORATION
PATENT DEPARTMENT
540 WHITE PLAINS RD
P O BOX 2005
TARRYTOWN NY 10591-9005

In Re Application of FLISHER et al. Application No.: 10/791,013 PCT No.: PCT/EP01/00391 Int. Filing Date: 15 January 2001 Priority Date: 28 January 2000 Attorney Docket No.: GT/W-21923/A/AC 533/PCT For: POLYMERISATION PROCESS	:	DECISION ON PETITION

This is a decision on applicant's "PETITION FOR SUSPENSION OF RULES UNDER 37 CFR 1.183" filed in the United States Patent and Trademark Office (USPTO) on 06 October 2004.

BACKGROUND

On 15 January 2001, applicant filed international application No. PCT/EP01/00391 which claimed a priority date of 28 January 2000 and which designated the United States. Thereafter, on 27 July 2004, before the expiration of the thirty month period, applicant filed, *inter alia*, a transmittal letter for entry into the national stage and the basic national stage filing fee. On 02 August 2001, applicant sent an executed declaration for filing.

On 11 October 2001, a Notification of Acceptance Under 35 U.S.C. 371 and 37 CFR 1.495 (Form PCT/DO/EO/903) indicating a 35 U.S.C. 371(c)(1), (c)(2) and (c)(4) date of 02 August 2001 and incorrectly indicating a date of receipt of all 35 U.S.C. requirements of 27 July 2001.

Applicant urges that the Form 903 be corrected to indicate a filing date of 35 U.S.C. 371(c)(1), (c)(2) and (c)(4) filing date of 27 July 2001.

DISCUSSION

A review of the application file indicates that the executed combined declaration and power of attorney, in compliance with 37 CFR 1.497(a) and (b), was deposited with the USPTO on 02 August 2001. A review of the application in the USPTO's Image File Wrapper (IFW) file confirms that the executed German language declaration was submitted on 24 March 2004, which does not comply with 37 CFR 1.497(a) & (b). The Notification of Acceptance mailed on 26 August 2004 was erroneously issued.

The evidence of record is sufficient to establish with reasonable certainty that the combined declaration and power of attorney was filed with the USPTO on 02 September 2004. A

filing date under 35 U.S.C. 371(c)(1), (c)(2) and (c)(4) of 02 September 2004 will be accorded application 10/490,443.

The actual filing date of the present application is considered to be the international filing date, 15 January 2001. The application file indicates that applicant completed the requirements set forth in 35 U.S.C. 371(c)(1), (c)(2) and (c)(4) on 02 August 2001. The Notification of Acceptance (FORM PCT/DO/EO/903) mailed on 11 October 2001 indicated the proper 35 U.S.C. 371(c) (1), (c)(2) and (c)(4) date. (Note MPEP section 1893.03(b).)

CONCLUSION

For the reasons set forth above, applicant's request to correct the Notification of Acceptance to reflect the 35 U.S.C. 371(c)(1), (c)(2) and (c)(4) date of 27 July 2001 is **REFUSED**. A new filing receipt will not be issued.

The Notification of Acceptance (Form PCT/DO/EO/903) mailed on 11 October 2001 correctly indicates a 35 U.S.C. 371(c) (1), (c)(2) and (c)(4) date of 02 August 2001. The date of receipt of all 35 U.S.C. requirements of 27 July 2001 is incorrect.

A copy of this decision will be filed and scanned into application no. 09/890,129.

Cynthia M. Kratz
Attorney Advisor
PCT Legal Office

Telephone: (571)272-3286
CMK/BM

UNITED STATES PATENT AND TRADEMARK OFFICE

Commissioner for Patents
United States Patent and Trademark Office
P.O. Box 1450
Alexandria, VA 22313-1450
www.uspto.gov
DIW Dec-05

BURKHART & BURKHART
PATENT ATTORNEYS
940 DAKOTA AVENUE
WHITEFISH MT 59937

COPY MAILED

DEC 19 2005

OFFICE OF PETITIONS

In re Application of	:	
McNutt et al.	:	DECISION ON PETITION TO
Application No. 10/791,020	:	WITHDRAW HOLDING OF
Filed: 1 March, 2004	:	ABANDONMENT
Attorney Docket No. P0316	:	

This is a decision on the petition filed on 3 October, 2005, to withdraw the holding of abandonment in the above-identified application.

The petition is **GRANTED**.

The application was held abandoned for failure to timely respond to the non-final Office action mailed on 3 November, 2004, which set a three (3) month shortened statutory period for reply. No extensions of the time for reply in accordance with 37 CFR 1.136(a) were obtained. Notice of Abandonment was mailed on 13 June, 2005.

Petitioners assert that an amendment was timely filed. In support, petitioners have supplied a copy of an amendment to the specification, the last page of which (Page 9) contains a Certificate of Mailing or Transmission dated 10 December, 2004, stating that the correspondence was deposited in first class mail, and signed by registered patent attorney Patrick N. Burkhart. Attorney Burkhart states, in the present petition, that he has personal knowledge that the correspondence was deposited with the USPS on the date specified on the Certificate of Mailing or Transmission.

As petitioners have provided convincing evidence that an amendment was transmitted to the USPTO on 10 December, 2004, the

showing of record is that a response was timely filed, and there is no abandonment in fact. Any inconvenience caused to applicant is regretted.

The application is being referred to Technology Center Art Unit 3617 for further processing.

Telephone inquiries concerning this matter may be directed to the undersigned at (571)272-3231.

Douglas I. Wood
Senior Petitions Attorney
Office of Petitions

UNITED STATES PATENT AND TRADEMARK OFFICE

Commissioner for Patents
United States Patent and Trademark Office
P.O. Box 1450
Alexandria, VA 22313-1450
www.uspto.gov

WALKER DIGITAL
FIVE HIGH RIDGE PARK
STAMFORD, CT 06905

COPY MAILED

AUG 3 1 2004

OFFICE OF PETITIONS

In re Application of :
Jay S. Walker, Victor M. :
Garcia, James A. Jorasch and : DECISION GRANTING PETITION
Steven M. Santisi : UNDER 37 CFR 1.47(a)
Application No. 10/791,029 :
Filed: March 2, 2004
Title: METHOD AND APPARATUS
FOR ALTERNATE DISPLAY
INFORMATION

This is in response to the "Petition Under 37 CFR 1.47(a)," filed June 1, 2004.

The petition is **granted**.

Petitioner has shown that the non-signing inventor has refused to join in the filing of the above-identified application.

The above-identified application and papers have been reviewed and found in compliance with 37 CFR 1.47(a). This application is hereby accorded Rule 1.47(a) status. As provided in Rule 1.47(c), this Office will forward notice of this application's filing to the non-signing inventor at the address given in the Declaration. Notice of the filing of this application will also be published in the Official Gazette.

The file is being forwarded to the Office of Initial Patent Examination for further processing.

Telephone inquiries regarding this decision should be directed to the undersigned at (703) 306-9200.

Edward J. Tannouse
Petitions Attorney
Office of Petitions
United States Patent and trademark Office

OIPE JC67
MAR 0 1 2005
PATENT & TRADEMARK OFFICE

Attorney's Docket No.: 4551P011 Patent

IN THE UNITED STATES PATENT AND TRADEMARK OFFICE

Confirmation No.: 1253

Application No.: 10/791,030

First Named Inventor: Xinye Liu

Filed: March 1, 2004

Art Unit: 1762

Examiner: Fuller, Eric B.

Docket No.: 4551P011

I hereby certify that this correspondence is being deposited with the United States Postal Service as first class mail with sufficient postage in an envelope addressed to the Commissioner for Patents, P.O. Box 1450, Alexandria, VA 22313-1450.

On February 25, 2005
Date of Deposit

Geneva Walls
Name of Person Mailing Correspondence

Signature February 25, 2005
Date

Commissioner for Patents
P.O. Box 1450
Alexandria, VA 22313-1450

PRELIMINARY AMENDMENT AND
PETITION TO MAKE SPECIAL (37 CFR 1.102(d))

Sir:

Upon entry of the amendments set forth below, applicants hereby petition to make this new application special. This application has not received any examination on the merits.

Amendments to the claims begin on page 2 of this paper.

PETITION GRANTED

Richard Crispino
Special Program Examiner
TC 1700

MAR 16 2005

03/02/2005 YPOLITE1 00000050 10791030
01 FC:1464 130.00 OP

UNITED STATES PATENT AND TRADEMARK OFFICE

UNITED STATES DEPARTMENT OF COMMERCE
United States Patent and Trademark Office
Address: COMMISSIONER FOR PATENTS
P.O. Box 1450
Alexandria, Virginia 22313-1450
www.uspto.gov

APPLICATION NO.	FILING DATE	FIRST NAMED INVENTOR	ATTORNEY DOCKET NO.	CONFIRMATION NO.
10/791,041	03/01/2004	Nikolaj S. Bjorner	14917.0457USU1	1264

27488 7590 12/26/2007
MERCHANT & GOULD (MICROSOFT)
P.O. BOX 2903
MINNEAPOLIS, MN 55402-0903

EXAMINER	
BELL, CORY C	

ART UNIT	PAPER NUMBER
2164	

MAIL DATE	DELIVERY MODE
12/26/2007	PAPER

Please find below and/or attached an Office communication concerning this application or proceeding.

The time period for reply, if any, is set in the attached communication.

UNITED STATES PATENT AND TRADEMARK OFFICE

COMMISSIONER FOR PATENTS
UNITED STATES PATENT AND TRADEMARK OFFICE
P.O. BOX 1450
ALEXANDRIA, VA 22313-1450
www.uspto.gov

MAILED

DEC 27 2007

TECHNOLOGY CENTER 2100

Timothy B. Scull
Merchant & Gould (Microsoft)
P.O. Box 2903
Minneapolis, MN 55402-0903

In re Application of:
Nikolaj BJORNER
Appl. No.: 10/791,041
Filed: March 1, 2004
For: INTERVAL VECTOR BASED KNOWLEDGE SYNCHRONIZATION FOR RESOURCE VERSIONING

DECISION ON PETITION UNDER 37 CFR § 1.59

This is a decision on the petition under 37 CFR § 1.59(b), filed on 11 December 2007, to expunge information submitted pursuant to MPEP § 724.05.

The petition is **DISMISSED**.

Petitioner requests that the information submitted on 11 December 2007 be expunged from the record if found not to be important to a reasonable examiner in deciding whether to allow the application to issue as a patent. The petition fee set forth in 37 CFR § 1.17(g) has been paid.

The petition is premature because the application has not been allowed or abandoned. Accordingly, it is not appropriate to make a final determination of whether or not the material requested to be expunged is "material," with "materiality" being defined as any information which the examiner considers as being important to a determination of patentability of the claims. Thus, the petition to expunge must be dismissed at this time.

During prosecution on the merits, the examiner will determine whether or not the information submitted on 11 December 2007 is considered to be "material." Once prosecution on the merits is closed, applicant may re-submit a petition to expunge the information. No further fee is required for such a second submission of a petition under 37 CFR § 1.59 to expunge information. If the information is not considered by the examiner to be material, the information will be expunged from the application and may be returned to applicant.

Any inquiry concerning this decision should be directed to the undersigned whose telephone number is (571) 272-3613.

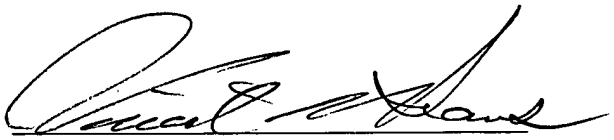

Vincent N. Trans, SPRE/QAS
Technology Center 2100
Computer Architecture, Software, and
Information Security

UNITED STATES PATENT AND TRADEMARK OFFICE

UNITED STATES DEPARTMENT OF COMMERCE
United States Patent and Trademark Office
Address: COMMISSIONER FOR PATENTS
P.O. Box 1450
Alexandria, Virginia 22313-1450
www.uspto.gov

APPLICATION NO.	FILING DATE	FIRST NAMED INVENTOR	ATTORNEY DOCKET NO.	CONFIRMATION NO.
10/791,041	03/01/2004	Nikolaj S. Bjorner	14917.0457USU1	1264

27488 7590 02/12/2009
MERCHANT & GOULD (MICROSOFT)
P.O. BOX 2903
MINNEAPOLIS, MN 55402-0903

EXAMINER	
PANNALA, SATHYANARAYA R	

ART UNIT	PAPER NUMBER
2164	

MAIL DATE	DELIVERY MODE
02/12/2009	PAPER

Please find below and/or attached an Office communication concerning this application or proceeding.

The time period for reply, if any, is set in the attached communication.

UNITED STATES PATENT AND TRADEMARK OFFICE

COMMISSIONER FOR PATENTS
UNITED STATES PATENT AND TRADEMARK OFFICE
P.O. BOX 1450
ALEXANDRIA, VA 22313-1450
www.uspto.gov

Rene A. Pereyra
MERCHANT & GOULD P.C.
P.O. Box 2903
Minneapolis, MN 55402-0903

In re Application of:
Nikolaj S. BJORNER
Appl. No.: 10/791,041
Filed: March 1, 2004
For: INTERVAL VECTOR BASED KNOWLEDGE SYNCHRONIZATION FOR RESOURCE VERSIONING

DECISION ON PETITION UNDER 37 CFR 1.59

This is a decision on the renewed petition under 37 CFR 1.59(b), filed on 04 November 2008, to expunge information submitted on 11 December 2007.

The petition is **GRANTED**.

Petitioner requests that the information submitted on 11 December 2007 be expunged from the record. Petitioner states that the information should be expunged from the record if found not to be important to a reasonable examiner in deciding whether to allow the application to issue as a patent. The petition fee set forth in 37 CFR § 1.17(g) has been paid.

Applicant is required to retain the expunged documents for the life of any patent, which issues on the above-identified application.

The expunged documents are herewith returned. However, the petitions and support documents will not be returned.

Any inquiry concerning this decision should be directed to the undersigned whose telephone number is (571) 272-3613.

/Vincent N. Trans/
Vincent N. Trans, SPRE/QAS
Technology Center 2100
Computer Architecture and Software

Attachments: one (1) sealed envelope.

UNITED STATES PATENT AND TRADEMARK OFFICE

Commissioner for Patents
United States Patent and Trademark Office
P.O. Box 1450
Alexandria, VA 22313-1450
www.uspto.gov

DENNIS S. FERNANDEZ
FERNANDEZ & ASSOCIATES LLP
1047 EL CAMINO REAL
SUITE 201
MENLO PARK, CA 94025

MAILED

MAY 28 2009

OFFICE OF PETITIONS

In re Application of	:	
Call et al.	:	DECISION ON PETITION
Application No. 10/791,057	:	TO WITHDRAW
Filed: March 1, 2004	:	FROM RECORD
Attorney Docket No. MESO0071	:	

This is a decision on the Request to Withdraw as attorney or agent of record under 37 C.F.R. § 1.36(b), filed January 19, 2006.

The request is **NOT APPROVED** because it is moot.

A review of the file record indicates that on January 20, 2006 the power of attorney to Fernandez & Associates LLP was revoked by the assignee of the patent application. Accordingly, the request to withdraw under 37 C.F.R. § 1.36(b) is moot.

All future communications from the Office will be directed to the below-listed address until otherwise notified by applicant.

Telephone inquires concerning this decision should be directed to the undersigned at 571-272-7751. All other inquires concerning either the examination or status of the application should be directed to the Technology Center.

Joan Olszewski
Petitions Examiner
Office of Petitions

cc: Law Offices of Ronald M Anderson
600 108th Ave, NE
Suite 507
Bellevue WA 98004

UNITED STATES PATENT AND TRADEMARK OFFICE

Commissioner for Patents
United States Patent and Trademark Office
P.O. Box 1450
Alexandria, VA 22313-1450
www.uspto.gov

THE DOW CHEMICAL COMPANY
INTELLECTUAL PROPERTY SECTION
P.O. BOX 1967
MIDLAND, MI 48641-1967

COPY MAILED

MAR 30 2009

OFFICE OF PETITIONS

In re Application of
Jaime **SIMON, et al.**
Application No. 10/791,061
Filed: March 2, 2004
Attorney Docket No. **42801C**

DECISION ON PETITION
UNDER 37 CFR 1.137(b)

This is a decision on the petition under 37 CFR 1.137(b), filed October 3, 2008, to revive the above-identified application.

The petition is **GRANTED**.

The application became abandoned for failure to reply in a timely manner to the non-final Office action mailed, October 5, 2007, which set a shortened statutory period for reply of three (3) months. No extensions of time under the provisions of 37 CFR 1.136(a) were obtained. Accordingly, the application became abandoned on January 6, 2008.

It is not apparent whether the person signing the statement of unintentional delay was in a position to have firsthand or direct knowledge of the facts and circumstances of the delay at issue. Nevertheless, such statement is being treated as having been made as the result of a reasonable inquiry into the facts and circumstances of such delay. See 37 CFR 10.18(b) and Changes to Patent Practice and Procedure; Final Rule Notice, 62 Fed. Reg. 53131, 53178 (October 10, 1997), 1203 Off. Gaz. Pat. Office 63, 103 (October 21, 1997). In the event that such an inquiry has not been made, petitioner must make such an inquiry. If such inquiry results in the discovery that it is not correct that the entire delay in filing the required reply from the due date for the reply until the filing of a grantable petition pursuant to 37 CFR 1.137(b) was unintentional, petitioner must notify the Office.

The petition satisfies the requirements of 37 CFR 1.137(b) in that petitioner has supplied (1) the reply in the form of an amendment; (2) the petition fee of $1620; and (3) an adequate statement of unintentional delay.

The application is being referred to Technology Center Art Unit 1616 for consideration of the amendment filed October 3, 2008.

Inquiries regarding the status or examination of the application should be directed to the examiner.

Telephone inquiries concerning this decision should be directed to Monica A. Graves at (571) 272-7253.

Brian W. Brown
Petitions Examiner
Office of Petitions

UNITED STATES PATENT AND TRADEMARK OFFICE

Commissioner for Patents
United States Patent and Trademark Office
P.O. Box 1450
Alexandria, VA 22313-1450
www.uspto.gov

SKJERVEN MORRILL LLP
25 METRO DRIVE
SUITE 700
SAN JOSE, CA 95110

COPY MAILED

AUG 15 2005

OFFICE OF PETITIONS

In re Application of :
John Bryan Jones, et al. :
Application No. 10/791,093 : ON PETITION
Filed: March 1, 2004 :
Attorney Docket No. GC566-2-C1 :

This is a decision on the petition under 37 CFR 1.137(b), filed March 10, 2005, to revive the above-identified application.

The petition is **GRANTED.**

The above-identified application became abandoned for failure to reply in a timely manner to the Notice to File Missing Parts of Nonprovisional Application mailed May 24, 2004. The Notice set a period for reply of two (2) months from the mail date of the Notice. No extensions of time under the provisions of 37 CFR 1.136(a) were obtained. Accordingly, the above-identified application became abandoned on July 26, 2004.

An extension of time under 37 CFR 1.136 must be filed prior to the expiration of the maximum extendable period for reply. See In re Application of S., 8 USPQ2d 1630, 1631 (Comm'r Pats. 1988). Accordingly, the $1020 extension of time submitted on March 10, 2005 was subsequent to the maximum extendable period for reply, this fee is unnecessary and will be credited to petitioner's deposit account as authorized.

The Associate Power of Attorney practice was eliminated on June 25, 2004. See Revision of Power of Attorney and Assignment Practice, 69 Fed Reg. 29865 (May 26, 2004); 1283 Off. Gaz. 148 (June 22, 2004). Although the paper has been placed in the file, the names of the patent practitioner listed on the Associate Power of Attorney have not been made of record.

Telephone inquiries concerning this decision should be directed to the undersigned at (571) 272-3229.

This application matter is being forwarded to the Office of Initial Patent Examination for further processing.

Retta Williams

Retta Williams
Petitions Examiner
Office of Petitions
Office of the Deputy Commissioner
for Patent Examination Policy

UNITED STATES PATENT AND TRADEMARK OFFICE

Commissioner for Patents
United States Patent and Trademark Office
P. O. Box 1450
Alexandria, VA 22313-1450
www.uspto.gov

FELLERS SNIDER BLANKENSHIP
BAILEY & TIPPENS, P.C.
SUITE 1700
100 NORTH BROADWAY
OKLAHOMA CITY, OK 73102-8820

COPY MAILED

OCT 31 2007

OFFICE OF PETITIONS

In re Application of :
David D. Brause et al :
Application No. 10/791,150 : ON PETITION
Filed: March 2, 2004 :
Attorney Docket No. 3123-552 (STL07651) :

This is a decision on the petition under 37 CFR 1.137(b), filed July 17, 2007, to revive the above-identified application.

The petition is **GRANTED**.

The above-identified application became abandoned for failure to reply in a timely manner to the non-final Office action mailed August 8, 2006, which set a shortened statutory period for reply of three (3) months. No extension of time under the provisions of 37 CFR 1.136(a) were obtained. Accordingly, the above-identified application became abandoned on November 9, 2006.

Telephone inquiries concerning this decision should be directed to Irvin Dingle at (571) 272-3210.

This matter is being referred to Technology Center AU 1732 for further processing.

Irvin Dingle
Petitions Examiner
Office of Petitions

UNITED STATES PATENT AND TRADEMARK OFFICE

UNITED STATES DEPARTMENT OF COMMERCE
United States Patent and Trademark Office
Address: COMMISSIONER FOR PATENTS
P.O. Box 1450
Alexandria, Virginia 22313-1450
www.uspto.gov

INTELLECTUAL PROPERTY GROUP
SEAGATE TECHNOLOGY FILES
FREDRIKSON & BYRON, PA
200 SOUTH SIXTH ST, SUITE 4000
MINNEAPOLIS, MN 55402-1425

Mail Date: 04/21/2010

Applicant	: David D. Brause	: DECISION ON REQUEST FOR
Patent Number	: 7597833	: RECALCULATION of PATENT
Issue Date	: 10/06/2009	: TERM ADJUSTMENT IN VIEW
Appliction No	: 10/791,150	: OF WYETH AND NOTICE OF INTENT TO
Filed	: 03/02/2004	: ISSUE CERTIFICATE OF CORRECTION
		:

The Request for Recalculation is **GRANTED** to the extent indicated.

The patent term adjustment has been determined to be **374** days. The USPTO will *sua sponte* issue a certificate of correction reflecting the amount of PTA days determined by the recalculation.

Prior to the issuance of the certificate of correction, the USPTO will afford patentee an opportunity to be heard and request reconsideration. Accordingly, patentee has **one month or thirty (30) days**, whichever is longer, to file a request for reconsideration of this patent term adjustment calculation. See 35 U.S.C. 154(b)(3)(B)(ii) and 37 CFR 1.322(a)(4). No extensions of time will be granted under 37 CFR 1.136.

Patentee should use document code PET.OP if electronically filing a request for reconsideration of this patent term adjustment calculation. The patentee must also include the information required by 37 CFR 1.705(b)(2) and the fee required by 37 CFR 1.18(e). If patentee does not file a timely request for reconsideration of this patent term adjustment calculation including the information required by 37 CFR 1.705(b)(2) and the fee required by 37 CFR 1.18(e), the USPTO will issue a certificate of correction reflecting the PTA determination noted above.

Patentee should be aware that in order to preserve the right to review in the United States District Court for the District of Columbia of the USPTO patent term adjustment determination, patentee must ensure that he or she also take the steps required under 35 U.S.C. 154(b)(4)(A) in a timely manner. Nothing in the request for recalculation should be construed as providing an alternative time frame for commencing a civil action under 35 U.S.C. 154(b)(4)(A).

Any questions concerning this decision should be directed to the Office of Patent Legal Administration at 571-272-7702.

UNITED STATES PATENT AND TRADEMARK OFFICE

UNITED STATES DEPARTMENT OF COMMERCE
United States Patent and Trademark Office
Address: COMMISSIONER FOR PATENTS
P.O. Box 1450
Alexandria, Virginia 22313-1450
www.uspto.gov

APPL NO.	FILING OR 371 (c) DATE	ART UNIT	FIL FEE REC'D	ATTY.DOCKET NO	DRAWINGS	TOT CLMS	IND CLMS
10/791,152	03/01/2004	1641	504	2183-6372US	5	20	4

CONFIRMATION NO. 3166

CORRECTED FILING RECEIPT

OC000000015926912

24247
TRASK BRITT
P.O. BOX 2550
SALT LAKE CITY, UT 84110

Date Mailed: 05/03/2005

Receipt is acknowledged of this regular Patent Application. It will be considered in its order and you will be notified as to the results of the examination. Be sure to provide the U.S. APPLICATION NUMBER, FILING DATE, NAME OF APPLICANT, and TITLE OF INVENTION when inquiring about this application. Fees transmitted by check or draft are subject to collection. Please verify the accuracy of the data presented on this receipt. **If an error is noted on this Filing Receipt, please mail to the Commissioner for Patents P.O. Box 1450 Alexandria Va 22313-1450. Please provide a copy of this Filing Receipt with the changes noted thereon. If you received a "Notice to File Missing Parts" for this application, please submit any corrections to this Filing Receipt with your reply to the Notice. When the USPTO processes the reply to the Notice, the USPTO will generate another Filing Receipt incorporating the requested corrections (if appropriate).**

Applicant(s)

Robert P. van Weeghel, Groningen, NETHERLANDS;
Roelf J. Suk, Groningen, NETHERLANDS;

Power of Attorney:

William Britt–20969
Joseph Walkowski Jr–28765
Laurence Bond–30549
Allen Turner–33041
Brick Power–38581
Edgar Cataxinos–39931
Bretton Crockett–44632
Andrew Nilles–47825
Krista Powell–47867
Gregory Dorland–51622

Domestic Priority data as claimed by applicant

This application is a CON of PCT/NL02/00579 09/04/2002

Foreign Applications

EUROPEAN PATENT OFFICE (EPO) 01203341.1 09/04/2001

If Required, Foreign Filing License Granted: 05/25/2004

The country code and number of your priority application, to be used for filing abroad under the Paris Convention, is US10/791,152

Projected Publication Date: 06/09/2005

Non-Publication Request: No

Early Publication Request: No

**** SMALL ENTITY ****

Title

Determination and quantification of red blood cell populations in samples

Preliminary Class

435

LICENSE FOR FOREIGN FILING UNDER
Title 35, United States Code, Section 184
Title 37, Code of Federal Regulations, 5.11 & 5.15

GRANTED

The applicant has been granted a license under 35 U.S.C. 184, if the phrase "IF REQUIRED, FOREIGN FILING LICENSE GRANTED" followed by a date appears on this form. Such licenses are issued in all applications where the conditions for issuance of a license have been met, regardless of whether or not a license may be required as set forth in 37 CFR 5.15. The scope and limitations of this license are set forth in 37 CFR 5.15(a) unless an earlier license has been issued under 37 CFR 5.15(b). The license is subject to revocation upon written notification. The date indicated is the effective date of the license, unless an earlier license of similar scope has been granted under 37 CFR 5.13 or 5.14.

This license is to be retained by the licensee and may be used at any time on or after the effective date thereof unless it is revoked. This license is automatically transferred to any related applications(s) filed under 37 CFR 1.53(d). This license is not retroactive.

The grant of a license does not in any way lessen the responsibility of a licensee for the security of the subject matter as imposed by any Government contract or the provisions of existing laws relating to espionage and the national security or the export of technical data. Licensees should apprise themselves of current regulations especially with respect to certain countries, of other agencies, particularly the Office of Defense Trade Controls, Department of State (with respect to Arms, Munitions and Implements of War (22 CFR 121-128)); the Office of Export Administration, Department of Commerce (15 CFR 370.10 (j)); the Office of Foreign Assets Control, Department of Treasury (31 CFR Parts 500+) and the Department of Energy.

NOT GRANTED

No license under 35 U.S.C. 184 has been granted at this time, if the phrase "IF REQUIRED, FOREIGN FILING LICENSE GRANTED" DOES NOT appear on this form. Applicant may still petition for a license under 37 CFR 5.12, if a license is desired before the expiration of 6 months from the filing date of the application. If 6 months has lapsed from the filing date of this application and the licensee has not received any indication of a secrecy order under 35 U.S.C. 181, the licensee may foreign file the application pursuant to 37 CFR 5.15(b).

UNITED STATES PATENT AND TRADEMARK OFFICE

COMMISSIONER FOR PATENTS
UNITED STATES PATENT AND TRADEMARK OFFICE
P.O. BOX 1450
ALEXANDRIA, VA 22313-1450
www.uspto.gov

RANDY A. GREGORY
GREGORY I.P. LAW
P.O. BOX 31090
SPOKANE WA 99223-3018

COPY MAILED
JUL 31 2006
OFFICE OF PETITIONS

In re Application of :
Randy D. Sines :
Application No. 10/791,159 : DECISION ON PETITION
Filed: March 1, 2004 : UNDER 37 CFR 1.78(a)(3)
Attorney Docket No. FL12-057 :

This is a decision on the petition under 37 CFR 1.78(a)(3), filed November 18, 2005, to accept an unintentionally delayed claim under 35 U.S.C. § 120 for the benefit of priority to the prior-filed nonprovisional applications set forth in the amendment filed with the petition.

The petition is **GRANTED**.

A petition for acceptance of a claim for late priority under 37 CFR 1.78(a)(3) is only applicable to those applications filed on or after November 29, 2000. Further, the petition is appropriate only after the expiration of the period specified in 37 CFR 1.78(a)(2)(ii). In addition, the petition under 37 CFR 1.78(a)(3) must be accompanied by:

(1) the reference required by 35 U.S.C. § 120 and 37 CFR 1.78(a)(2)(i) of the prior-filed application, unless previously submitted;
(2) the surcharge set forth in § 1.17(t); and
(3) a statement that the entire delay between the date the claim was due under 37 CFR 1.78(a)(2)(ii) and the date the claim was filed was unintentional. The Director may require additional information where there is a question whether the delay was unintentional.

All of the above requirements having been satisfied, the late claim for priority under 35 U.S.C. § 120 is accepted as being unintentionally delayed.

The granting of the petition to accept the delayed benefit claim to the prior-filed applications under 37 CFR 1.78(a)(3) should not be construed as meaning that this application is entitled to the benefit of the prior-filed applications. In order for this application to be entitled to the benefit of the prior-filed applications, all other requirements under 35 U.S.C. § 120 and 37 CFR 1.78(a)(1) and (a)(2) must be met. Similarly, the fact that the corrected Filing Receipt accompanying this decision on petition includes the prior-filed applications should not be construed as meaning that applicant is entitled to the claim for benefit of priority to the prior-filed applications noted thereon. Accordingly, the examiner will, in due course, consider this benefit claim and determine whether the application is entitled to the benefit of the earlier filing date.

A corrected Filing Receipt, which includes the priority claim to the prior-filed nonprovisional applications, accompanies this decision on petition.

Any inquiries concerning this decision may be directed to the undersigned at (571) 272-3218. All other inquiries concerning either the examination procedures or status of the application should be directed to the Technology Center.

This application is being forwarded to Technology Center Art Unit 3711 for consideration by the examiner of applicant's entitlement to claim benefit of priority under 35 U.S.C. § 120 to the prior-filed applications.

Frances Hicks
Petitions Examiner
Office of Petitions

ATTACHMENT: Corrected Filing Receipt

UNITED STATES PATENT AND TRADEMARK OFFICE

UNITED STATES DEPARTMENT OF COMMERCE
United States Patent and Trademark Office
Address: COMMISSIONER FOR PATENTS
P.O. Box 1450
Alexandria, Virginia 22313-1450
www.uspto.gov

APPL NO.	FILING OR 371 (c) DATE	ART UNIT	FIL FEE REC'D	ATTY.DOCKET NO	DRAWINGS	TOT CLMS	IND CLMS
10/791,159	03/01/2004	3711	385	FL12-057	6	5	2

CONFIRMATION NO. 3431

CORRECTED FILING RECEIPT

OC000000019812231

39279
RANDY A. GREGORY
GREGORY I.P. LAW
P.O. BOX 31090
SPOKANE, WA 99223-3018

Date Mailed: 07/28/2006

Receipt is acknowledged of this regular Patent Application. It will be considered in its order and you will be notified as to the results of the examination. Be sure to provide the U.S. APPLICATION NUMBER, FILING DATE, NAME OF APPLICANT, and TITLE OF INVENTION when inquiring about this application. Fees transmitted by check or draft are subject to collection. Please verify the accuracy of the data presented on this receipt. **If an error is noted on this Filing Receipt, please mail to the Commissioner for Patents P.O. Box 1450 Alexandria Va 22313-1450. Please provide a copy of this Filing Receipt with the changes noted thereon. If you received a "Notice to File Missing Parts" for this application, please submit any corrections to this Filing Receipt with your reply to the Notice. When the USPTO processes the reply to the Notice, the USPTO will generate another Filing Receipt incorporating the requested corrections (if appropriate).**

Applicant(s)

Randy D. Sines, Spokane, WA;

Power of Attorney: The patent practitioners associated with Customer Number **39279**.

Domestic Priority data as claimed by applicant

This application is a CIP of 10/704,525 11/04/2003 PAT 6,896,259
which is a CON of 10/198,431 07/16/2002 PAT 6,641,137
which is a CON of 09/813,513 03/20/2001 PAT 6,419,225
which is a CON of 09/128,960 08/04/1998 PAT 6,203,009
which is a CIP of 08/649,821 05/17/1996 PAT 5,788,230

Foreign Applications

If Required, Foreign Filing License Granted: 05/25/2004

The country code and number of your priority application, to be used for filing abroad under the Paris Convention, is US10/791,159

Projected Publication Date: Not Applicable

Non-Publication Request: No

Early Publication Request: No

**** SMALL ENTITY ****

Title

Drop gaming machine with varying symbol scoring zones and automatic bias prevention

Preliminary Class

273

PROTECTING YOUR INVENTION OUTSIDE THE UNITED STATES

Since the rights granted by a U.S. patent extend only throughout the territory of the United States and have no effect in a foreign country, an inventor who wishes patent protection in another country must apply for a patent in a specific country or in regional patent offices. Applicants may wish to consider the filing of an international application under the Patent Cooperation Treaty (PCT). An international (PCT) application generally has the same effect as a regular national patent application in each PCT-member country. The PCT process **simplifies** the filing of patent applications on the same invention in member countries, but **does not result** in a grant of "an international patent" and does not eliminate the need of applicants to file additional documents and fees in countries where patent protection is desired.

Almost every country has its own patent law, and a person desiring a patent in a particular country must make an application for patent in that country in accordance with its particular laws. Since the laws of many countries differ in various respects from the patent law of the United States, applicants are advised to seek guidance from specific foreign countries to ensure that patent rights are not lost prematurely.

Applicants also are advised that in the case of inventions made in the United States, the Director of the USPTO must issue a license before applicants can apply for a patent in a foreign country. The filing of a U.S. patent application serves as a request for a foreign filing license. The application's filing receipt contains further information and guidance as to the status of applicant's license for foreign filing.

Applicants may wish to consult the USPTO booklet, "General Information Concerning Patents" (specifically, the section entitled "Treaties and Foreign Patents") for more information on timeframes and deadlines for filing foreign patent applications. The guide is available either by contacting the USPTO Contact Center at 800-786-9199, or it can be viewed on the USPTO website at http://www.uspto.gov/web/offices/pac/doc/general/index.html.

For information on preventing theft of your intellectual property (patents, trademarks and copyrights), you may wish to consult the U.S. Government website, http://www.stopfakes.gov. Part of a Department of Commerce initiative, this website includes self-help "toolkits" giving innovators guidance on how to protect intellectual property in specific countries such as China, Korea and Mexico. For questions regarding patent enforcement issues, applicants may call the U.S. Government hotline at 1-866-999-HALT (1-866-999-4158).

LICENSE FOR FOREIGN FILING UNDER
Title 35, United States Code, Section 184
Title 37, Code of Federal Regulations, 5.11 & 5.15

GRANTED

The applicant has been granted a license under 35 U.S.C. 184, if the phrase "IF REQUIRED, FOREIGN FILING LICENSE GRANTED" followed by a date appears on this form. Such licenses are issued in all applications where the conditions for issuance of a license have been met, regardless of whether or not a license may be required as set forth in 37 CFR 5.15. The scope and limitations of this license are set forth in 37 CFR 5.15(a) unless an earlier license has been issued under 37 CFR 5.15(b). The license is subject to revocation upon written notification. The date indicated is the effective date of the license, unless an earlier license of similar scope has been granted under 37 CFR 5.13 or 5.14.

This license is to be retained by the licensee and may be used at any time on or after the effective date thereof unless it is revoked. This license is automatically transferred to any related applications(s) filed under 37 CFR 1.53(d). This license is not retroactive.

The grant of a license does not in any way lessen the responsibility of a licensee for the security of the subject matter as imposed by any Government contract or the provisions of existing laws relating to espionage and the national security or the export of technical data. Licensees should apprise themselves of current regulations especially with respect to certain countries, of other agencies, particularly the Office of Defense Trade Controls, Department of State (with respect to Arms, Munitions and Implements of War (22 CFR 121-128)); the Bureau of Industry and Security, Department of Commerce (15 CFR parts 730-774); the Office of Foreign Assets Control, Department of Treasury (31 CFR Parts 500+) and the Department of Energy.

NOT GRANTED

No license under 35 U.S.C. 184 has been granted at this time, if the phrase "IF REQUIRED, FOREIGN FILING LICENSE GRANTED" DOES NOT appear on this form. Applicant may still petition for a license under 37 CFR 5.12, if a license is desired before the expiration of 6 months from the filing date of the application. If 6 months has lapsed from the filing date of this application and the licensee has not received any indication of a secrecy order under 35 U.S.C. 181, the licensee may foreign file the application pursuant to 37 CFR 5.15(b).

UNITED STATES PATENT AND TRADEMARK OFFICE

Commissioner for Patents
United States Patent and Trademark Office
P.O. Box 1450
Alexandria, VA 22313-1450
www.uspto.gov

COPY MAILED

NOV 2 0 2009

OFFICE OF PETITIONS

CHIEF IP CONSEL
BRIDGSTONE AMERICAS HOLDINGS, INC.
1200 FIRESTONE PARKWAY
AKRON, OH 44317

In re Application of :
Xiaorong Wang, et al. :
Application No. 10/791,177 : ON PETITION
Filed: March 2, 2004 :
Attorney Docket No. P02083US1A :

This is a decision on the petition under 37 CFR 1.313(c)(2), filed November 17, 2009 to withdraw the above-identified application from issue after payment of the issue fee.

The petition is signed by a registered attorney or agent of record. However, in accordance with 37 CFR 1.34(a), the signature of Nathan T. Lewis appearing on the correspondence shall constitute a representation to the United States Patent and Trademark Office that he is authorized to represent the particular party on whose behalf he acts. However, if Mr. Lewis desires to receive correspondence regarding this file, the appropriate power of attorney documentation must be submitted. A courtesy copy of this decision is being mailed to Mr. Lewis, the petitioner herein. However, until otherwise instructed, all future correspondence regarding this application file will be directed solely to the above-noted correspondence address of record.

The petition is **GRANTED**.

The above-identified application is withdrawn from issue for consideration of a submission under 37 CFR 1.114 (request for continued examination). See 37 CFR 1.313(c)(2).

Petitioner is advised that the issue fee paid on June 11, 2009, in the above-identified application cannot be refunded. If, however, the above-identified application is again allowed, petitioner may request that it be applied towards the issue fee required by the new Notice of Allowance . [1]

Telephone inquiries relating to this decision should be directed to the undersigned at (571) 272-3204.

[1] *The request to apply the issue fee to the new Notice may be satisfied by completing and returning the new Part B - Fee(s) Transmittal Form (along with any balance due at the time of submission). Petitioner is advised that the Issue Fee Transmittal Form* ***must*** *be completed and timely submitted to avoid abandonment of the application.*

The application is being referred to Technology Center AU 1796 for further processing of the request for continued examination under 37 CFR 1.114.

/SDB/

Sherry D. Brinkley
Petitions Examiner
Office of Petitions

cc: NATHAN T.LEWIS
JONES DAY
NORTH POINT
901 LAKESIDE AVENUE
CLEVELAND, OH 44114

UNITED STATES PATENT AND TRADEMARK OFFICE

Commissioner for Patents
United States Patent and Trademark Office
P.O. Box 1450
Alexandria, VA 22313-1450
www.uspto.gov

FLEIT, KAIN, GIBBONS, GUTMAN,
BONGINI & BIANCO, P.L.
SUITE 100
750 SOUTHEAST THIRD AVENUE
FT. LAUDERDALE FL 33316-1153

COPY MAILED

JUL 20 2009

OFFICE OF PETITIONS

In re Application of :
Peter H. Sayet :
Application No. 10/791,179 :
Filed: March 2, 2004 :
Attorney Docket No. 7047-2 :

DECISION ON PETITION
TO WITHDRAW
FROM RECORD

This is a decision on the request to withdraw as attorney of record under 37 C.F.R. § 1.36, filed June 5, 2009.

The request is **NOT APPROVED**.

The Office will only accept correspondence address changes to the most current address information provided for the assignee of the entire interest *who properly became of record under 37 CFR 3.71,* or, if no assignee of the entire interest has properly been made of record, the most current address information provided for the first named inventor. 37 CFR 3.71(c) states:

> *An assignee becomes of record either in a national patent application or a reexamination proceeding by filing a statement in compliance with § 3.73(b) that is signed by a party who is authorized to act on behalf of the assignee.*

Therefore, as there is currently no Statement under 37 CFR 3.73(b) currently of record in the instant application, the Office cannot change the correspondence address to the address on the Request to Withdraw.

All future communications from the Office will continue to be directed to the above-listed address until otherwise notified by applicant.

Currently, there is an outstanding Office action mailed March 31, 2009 that requires a reply.

Telephone inquires concerning this decision should be directed to Petitions Examiner Joan Olszewski at (571) 272-7751. All other inquires concerning either the examination or status of the application should be directed to the Technology Center.

/Liana Walsh/
Liana Walsh
Petitions Examiner
Office of Petitions

UNITED STATES PATENT AND TRADEMARK OFFICE

UNITED STATES DEPARTMENT OF COMMERCE
United States Patent and Trademark Office
Address: COMMISSIONER FOR PATENTS
P.O. Box 1450
Alexandria, Virginia 22313-1450
www.uspto.gov

APPLICATION NO.	FILING DATE	FIRST NAMED INVENTOR	ATTORNEY DOCKET NO.	CONFIRMATION NO.
10/791,190	03/02/2004	Frank L. Hall	4718.3US (00-0316.03/US)	1971

24247 7590 02/16/2005

TRASK BRITT
P.O. BOX 2550
SALT LAKE CITY, UT 84110

EXAMINER	
HEINRICH, SAMUEL M	

ART UNIT	PAPER NUMBER
1725	

DATE MAILED: 02/16/2005

Please find below and/or attached an Office communication concerning this application or proceeding.

UNITED STATES PATENT AND TRADEMARK OFFICE

Commissioner for Patents
United States Patent and Trademark Office
P.O. Box 1450
Alexandria, VA 22313-1450
www.uspto.gov

FEB 15 2005

In re Application of	:	
Frank L. Hall	:	WITHDRAWAL
Serial No. 10/791,190	:	FROM ISSUE
Filed: March 02, 2004	:	UNDER 37 CFR 1.313(b)
For: METHODS FOR PREPARING BALL GRID ARRAY SUBSTRATES VIA USE OF A LASER	:	

The above-identified application is withdrawn from issue after payment of the issue fee due to reopening of prosecution. See 37 CFR 1.313 (b).

The above-identified application is hereby withdrawn from issue.

The issue fee is refundable upon written request. If, however, the application is again found allowable, the issue fee can be applied toward payment of the issue fee in the amount identified on the new Notice of Allowance and Issue Fee Due upon written request. This request and any balance due must be received on or before the due date noted in the new Notice of Allowance in order to prevent abandonment of the application.

Telephone inquiries should be directed to at Tom Dunn (571) 272-1171.

The above-identified application is being forwarded to the examiner for prompt appropriate action, including notifying applicant of the new status of this application.

JMStone

Jacqueline Stone, Director
Technology Center 1700
Chemical and Materials Engineering

TRASK BRITT
P. O. Box 2550
Salt Lake City, UT 84110

UNITED STATES PATENT AND TRADEMARK OFFICE

Commissioner for Patents
United States Patent and Trademark Office
P.O. Box 1450
Alexandria, VA 22313-1450
www.uspto.gov

TRASK BRITT
P O BOX 2550
SALT LAKE CITY, UT 84110

COPY MAILED

NOV 0 8 2005

OFFICE OF PETITIONS

In re Application of	:	
Raymond J. Beffa	:	
Application No. 10/791,193	:	DECISION GRANTING PETITION
Filed: March 2, 2004	:	UNDER 37 CFR 1.313(c)(2)
Atty Dkt No. 3039.4US (96-0969.04/US)	:	

This is a decision on the petition, filed November 2, 2005, under 37 CFR 1.313(c)(2) to withdraw the above-identified application from issue after payment of the issue fee.

The petition is **GRANTED**.

The above-identified application is withdrawn from issue for consideration of a submission under 37 CFR 1.114 (request for continued examination). See 37 CFR 1.313(c)(2).

Petitioner is advised that the issue fee paid on July 11, 2005 in the above-identified application cannot be refunded. If, however, the above-identified application is again allowed, petitioner may request that it be applied towards the issue fee required by the new Notice of Allowance.[1]

Telephone inquiries should be directed to the undersigned at (571) 272-3218.

This matter is being referred to Technology Center AU 2121 for processing of the request for continued examination under 37 CFR 1.114 and for consideration of the Information Disclosure Statement.

Frances Hicks
Petitions Examiner
Office of Petitions

---

[1] *The request to apply the issue fee to the new Notice may be satisfied by completing and returning the new Issue Fee Transmittal Form PTOL-85(b) (along with any balance due or the amount due at the time of payment), which includes the following language thereon: "Commissioner for Patents is requested to apply the Issue Fee and Publication Fee (if any) or re-apply any previously paid issue fee to the application identified above." Petitioner is advised that, whether a fee is indicated as being due or not, the Issue Fee Transmittal Form* ***must*** *be completed and timely submitted to avoid abandonment. Note the language in bold text on the first page of the Notice of Allowance and Fee(s) Due (PTOL-85).*

UNITED STATES PATENT AND TRADEMARK OFFICE

Commissioner for Patents
United States Patent and Trademark Office
P.O. Box 1450
Alexandria, VA 22313-1450
www.uspto.gov

TRASKBRITT
P O BOX 2550
SALT LAKE CITY, UT 84110

COPY MAILED

MAY 23 2006

OFFICE OF PETITIONS

In re Application of :
Raymond J. Beffa :
Application No. 10/791,193 : DECISION ON PETITION
Filed: March 2, 2004 : UNDER 37 CFR 1.313(c)(2)
Attorney Docket No. 2269-3938.4US :

This is a decision on the petition, filed April 14, 2006, under 37 CFR 1.313(c)(2) to withdraw the above-identified application from issue after payment of the issue fee.

The petition is **GRANTED**, *nunc pro tunc*.

It is noted that, although the petition to withdraw from issue had not been acted upon by the appropriate deciding official of the U.S. Patent and Trademark Office, the Technology Center processed the request for continued examination (RCE) under 37 CFR 1.114 and subsequently issued a new Notice of Allowance and Fee(s) Due and Notice of Allowability on May 5, 2006. Where an issue fee has been paid and an RCE is subsequently filed, the RCE is not a proper filing unless a petition to withdraw from issue has been granted. Therefore, the examiner was without authority to act further in the case absent a grantable petition withdrawing the application from issue. Nevertheless, in view of this decision on petition, the RCE is now considered a proper filing and the actions of the examiner taken thereafter are hereby ratified.

Petitioner is reminded that the Part B - Fee(s) Transmittal Form or equivalent thereof must be returned to the Office to prevent the abandonment of the application, even if no fee is due.

Frances Hicks
Petitions Examiner
Office of Petitions

C:\Documents and Settings\FHicks\My Documents\470\may9\791193-wo authority.wpd

UNITED STATES PATENT AND TRADEMARK OFFICE

Commissioner for Patents
United States Patent and Trademark Office
P.O. Box 1450
Alexandria, VA 22313-1450
www.uspto.gov

STORAGE TECHNOLOGY CORPORATION
ONE STORAGE TEK DRIVE, MS-4309
LOUISVILLE CO 80028-4309

COPY MAILED

AUG 1 1 2005

OFFICE OF PETITIONS

In re Application of :
Milligan, et al. :
Application No.: 10/791,205 :
Filed: March 2, 2004 :
Attorney Docket No.: 2003-023-DSK :
For: CANISTER-BASED STORAGE SYSTEM

DECISION REFUSING STATUS
UNDER 37 CFR 1.47(a)

This is a decision on the petition under 37 CFR 1.47(a), filed June 30, 2004(certificate of mailing date June 28, 2004).

The petition is **DISMISSED**.

Any request for reconsideration of this decision must be submitted within TWO (2) MONTHS from the mail date of this decision. Extensions of time under 37 CFR 1.136(a) are permitted. Any response should be entitled "Request for Reconsideration of Petition Under 37 CFR 1.47(a)" and may include an oath or declaration executed by the inventor. **Failure to respond will result in abandonment of the application.**

The above-identified application was filed on March 2, 2004 without an executed oath or declaration. Accordingly, on May 24, 2004, a "Notice to File Missing Parts of Nonprovisional Application" was mailed, requiring, an executed oath or declaration, a surcharge for its late filing, and replacement drawings within an extendable two month period from the mail date of the notice.

In response, on June 30, 2004 (certificate of mailing date June 28, 2004), the surcharge, a declaration executed by ten of eleven joint inventors, authorization to charge the petition fee, and the instant petition were filed.[1] Attorney Timothy R. Schulte argues that non-signing joint inventor Jacques Debiez has constructively refused to join in the filing of the above-identified application.

[1]Regarding finances, deposit account no. 19-4545 will be charged the required $130.00 Rule 47 petition fee, which is the fee that was due on June 30, 2004, when the Rule 47 petition was filed. In addition, the same deposit account will be charged a two month extension of time fee of $420.00. This is the fee that was due on September 17, 2004, when applicants submitted replacement drawings in response to the May 24, 2004 Notice.

A grantable petition under 37 CFR 1.47(a) requires

(1) a petition including proof of the pertinent facts establishing that the joint inventor(s) refuses to join, or cannot be found or reached after diligent effort,
(2) a proper oath or Declaration executed by the available joint inventor(s),
(3) the fee of $130.00
(4) the last known address of the omitted inventor(s).

This petition lacks item (1) above.

As to item (1), Applicants have failed to establish that the inventor has refused to sign the declaration. The proof of the pertinent events should be made by a statement of someone with first hand knowledge of the events. **The Office requires that the non-signing inventor be provided with a complete copy of the application as filed**. This includes the specification with claims, drawings, if any, and a declaration. See MPEP 409.03(d).

In the June 11, 2004 e-mail from Inventor Debiez to Ms. Stephanie Klepp, Inventor Debiez alleges "misappropriation made visible" and states that he and his attorney will carefully check any further applications that his former employer, StorageTek, files on topics he worked on and will notify authorized agencies with any discrepancies. He states that there will be lawsuit consequences for StorageTek about any submission related to the canister concept or anything he was involved in as a principal inventor. He states it would have been easier to keep him updated and to find an agreement.

The fact that Inventor Debiez threatens lawsuits does not absolve StorageTek of providing him with a copy of the application as filed and a declaration for patent application. As a named inventor, he will be entitled to inspect any paper in the file wrapper of the application, order copies of all or any part thereof (at a prepaid cost per 37 CFR 1.19) or make his position of record in the application.

Inventor Debiez must have the complete application in his possession in order to make an informed decision as to whether he joins in its filing. When petitioners can show that Inventor Debiez was mailed or recieved the complete application and that he either refused to sign the declaration or would not respond to the request that he sign the declaration, petitioners will have satisfied this requirement.

In addition, the undersigned would like a copy of the letter (translated if necessary) referenced in the May 22, 2003 e-mail from Florence Melou to Dale L. Boland, written by Inventor Debiez and addressed to STK HQ legal department, that states Inventor Debiez will take them to court if he receives a patent correspondence at his private address.

Further correspondence with respect to this matter should be addressed as follows:

By mail: Mail Stop PETITION
Commissioner for Patents
Post Office Box 1450
Alexandria, VA 22313-1450

By hand: U.S. Patent and Trademark Office
Customer Service Window, Mail Stop Petition
Randolph Building
401 Dulany Street
Alexandria, VA 22314

By FAX: (571) 273-8300 - ATTN: Office of Petitions

Telephone inquiries should be directed to the undersigned at (571) 272-3230.

E. Shirene Willis

E. Shirene Willis
Senior Petitions Attorney
Office of Petitions
Office of the Deputy Commissioner
for Patent Examination Policy

UNITED STATES PATENT AND TRADEMARK OFFICE

Commissioner for Patents
United States Patent and Trademark Office
P.O. Box 1450
Alexandria, VA 22313-1450
www.uspto.gov

STORAGE TECHNOLOGY CORPORATION
ONE STORAGE TEK DRIVE, MS-4309
LOUISVILLE CO 80028-4309

COPY MAILED

NOV 0 8 2005

OFFICE OF PETITIONS

In re Application of
Milligan, et al.
Application No.: 10/791,205
Filed: March 2, 2004
Attorney Docket No.: 2003-023-DSK
For: CANISTER-BASED STORAGE SYSTEM

DECISION ACCORDING STATUS
UNDER 37 CFR 1.47(a)

This is a decision on the reconsideration petition under 37 CFR 1.47(a), filed October 21, 2005 (certificate of mailing date October 19, 2005).

The petition is **GRANTED**.

Petitioners have shown that the non-signing inventor, Jacques Debiez, has unequivocally refused to join in the filing of the above-identified application. Specifically, the statement of facts of Charles Milligan establishes that during a meeting with Mr. Milligan on August 25, 2005, the inventor declared (1) that would neither receive nor read documents from the assignee and (2) that all contact with him must be carried out through his attorney. Petitioners have attempted to contact Mr. Debiez' attorney with the application papers on 10 occasions without any success. Given these facts, further attempts to gain Mr. Debiez' cooperation would be fruitless. Petitioners have submitted a declaration in compliance with 37 CFR 1.63 and 1.64.

This application and papers have been reviewed and found in compliance with 37 CFR 1.47(a). This application is hereby accorded Rule 1.47(a) status.

As provided in Rule 1.47(c), this Office will forward notice of this application's filing to the non-signing inventor at the address given in the petition. Notice of the filing of this application will also be published in the Official Gazette.

After this decision is mailed, the above-identified application will be forwarded to Technology Center 2841 for examination in due course.

Telephone inquiries should be directed to the undersigned at (571) 272-3230.

E. Shirene Willis
Senior Petitions Attorney
Office of Petitions

cc: MARK D. CHUEY
BROOKS KUSHMAN P.C.
1000 TOWN CENTER, 22ND FLOOR
SOUTHFIELD, MI 48075-1238

UNITED STATES PATENT AND TRADEMARK OFFICE

Commissioner for Patents
United States Patent and Trademark Office
P.O. Box 1450
Alexandria, VA 22313-1450
www.uspto.gov

JACQUES DEBIEZ
229 CHEMIN DE TUCAUT
31270 CUGNAUX
FRANCE

COPY MAILED

NOV 0 8 2005

OFFICE OF PETITIONS

In re Application of :
Milligan, et al. : LETTER
Application No.: 10/791,205 :
Filed: March 2, 2004 :
Attorney Docket No.: 2003-023-DSK :
For: CANISTER-BASED STORAGE SYSTEM

Dear Mr. Debiez:

You are named as a joint inventor in the above identified United States patent application, filed under the provisions of 35 U.S.C. 116 (United States Code), and 37 CFR 1.47(a), Rules of Practice in Patent Cases. Should a patent be granted on the application you will be designated therein as a joint inventor.

As a named inventor you are entitled to inspect any paper in the file wrapper of the application, order copies of all or any part thereof (at a prepaid cost per 37 CFR 1.19) or make your position of record in the application. Alternatively, you may arrange to do any of the preceding through a registered patent attorney or agent presenting written authorization from you. If you care to join the application, the contact person listed below would presumably assist you. Joining in the application would entail the filing of an appropriate oath or declaration by you pursuant to 37 CFR 1.63.

Requests for information regarding your application should be directed to the File Information Unit at (703)308-2733. Information regarding how to pay for and order a copy of the application, or a specific paper in the application, should be directed to Certification Division at (703)308-9726 or 1(800)972-6382 (outside the Washington D.C. area).

Telephone inquiries regarding this communication should be directed to the undersigned at (571) 272-3230.

E. Shirene Willis
Senior Petitions Attorney
Office of Petitions

CONTACT PERSON: Timothy R. Schulte
Storage Technology Corporation
One StorageTek Drive, MS-4309
Louisville CO 80028-4309

UNITED STATES PATENT AND TRADEMARK OFFICE

COMMISSIONER FOR PATENTS
UNITED STATES PATENT AND TRADEMARK OFFICE
P.O. BOX 1450
ALEXANDRIA, VA 22313-1450
www.uspto.gov

DONALD W. MEEKER
PATENT AGENT
924 EAST OCEAN FRONT #E
NEWPORT BEACH, CA 92661

COPY MAILED

AUG 15 2006

OFFICE OF PETITIONS

In re Application of :
Sol A. Gonzalvo :
Application No. 10/791,225 : ON PETITION
Filed: March 2, 2004 :
Attorney Docket No. SD67/04 :

This is a decision on the renewed petition, filed January 7, 2005, to revive the above-identified application under the provisions of 37 CFR 1.137(b).

The petition is **GRANTED**.

The application became abandoned for a failure to reply in a timely manner to the non-final Office action mailed April 18, 2005. A Notice of Abandonment was mailed on December 20, 2005. In response, on January 7, 2006 the present petition was filed.

The petition is found to comply with the requirements of 37 CFR 1.137(b).

Telephone inquiries concerning this decision may be directed to the undersigned at (571) 272-3204. All other inquiries regarding this application should be directed to the Technology Center.

The application file is being forwarded to Technology Center AU 2872 for consideration of the amendment filed January 7, 2005.

Sherry D. Brinkley
Petitions Examiner
Office of Petitions

SPE RESPONSE FOR CERTIFICATE OF CORRECTION

Paper No.: _____

DATE : April 18, 2006

TO SPE OF : ART UNIT 2831 Dean A. Reichard

SUBJECT : Request for Certificate of Correction on Patent No.: 6960722 B2 (10/791,230)

A response is requested with respect to the accompanying request for a certificate of correction.

Please complete this form and return with file, within 7 days to:
Palm location **7580, Certificates of Correction Branch – South Tower – 9A22**
If response is for an IFW, **return to employee (named below) via PUBSCofC Team in MADRAS.**
With respect to the change(s) requested, correcting Office and/or Applicant's errors, should the patent read as shown in the certificate of correction (COCIN)? No new matter should be introduced, nor should the scope or meaning of the claims be changed.

Thank You For Your Assistance

Antonio Johnson
Certificates of Correction Branch
Tel. No. 703-308-9390 ext. 112

The request for issuing the above-identified correction(s) is hereby:
Note your decision on the appropriate box.

LCR ☒ **Approved** — **All** changes apply.
12/25/07

☐ **Approved in Part** — Specify below which changes **do not** apply.

☐ **Denied** — State the reasons for denial below.

Comments:

Diego Gutierrez
Supervisory Patent Examiner
Technology Center 2800

SPE | **Art Unit** 2831

UNITED STATES PATENT AND TRADEMARK OFFICE

Commissioner for Patents
United States Patent and Trademark Office
P.O. Box 1450
Alexandria, VA 22313-1450
www.uspto.gov

BLAKELY SOKOLOFF TAYLOR & ZAFMAN
12400 WILSHIRE BOULEVARD, 7TH FLOOR
LOS ANGELES CA 90025

COPY MAILED

JUL 2 0 2004

OFFICE OF PETITIONS

In re Application of :
John Brinkman et al :
Application No. 10/791,240 :
Filed: March 1, 2004 :
Attorney Docket No. 3992P006C :

NOTICE

This is a notice regarding your request for acceptance of a fee deficiency submission under 37 CFR 1.28. On September 1, 1998, the Court of Appeals for the Federal Circuit held that 37 CFR 1.28(c) is the sole provision governing the time for correction of the erroneous payment of the issue fee as a small entity. **See DH Technology v. Synergystex International, Inc. 154 F.3d 1333, 47 USPQ2d 1865 (Fed. Cir. Sept. 1, 1998).**

The Office no longer investigates or rejects original or reissue applications under 37 CFR 1.56. **1098 Off. Gaz. Pat. Office 502 (January 3, 1989).** Therefore, nothing in this Notice is intended to imply that an investigation was done.

Your fee deficiency submission under 37 CFR 1.28 is hereby **ACCEPTED.**

Inquiries related to this communication should be directed to the undersigned at (703) 305-8859.

This file is being referred to the Office of Initial Patent Examination.

Karen Creasy

Karen Creasy
Petitions Examiner
Office of Petitions
Office of the Deputy Commissioner
for Patent Examination Policy

UNITED STATES PATENT AND TRADEMARK OFFICE

Commissioner for Patents
United States Patent and Trademark Office
P.O. Box 1450
Alexandria, VA 22313-1450
www.uspto.gov

JOSEPH A. TESSARI, ESQ.
TYCO TECHNOLOGY RESOURCES
4550 NEW LINDEN HILL ROAD - SUITE 140
WILMINGTON, DE 19808-2952

COPY MAILED

SEP 0 1 2005

OFFICE OF PETITIONS

In re Application of	:	
Christopher N. Brindle et al	:	
Application No. 10/791,243	:	DECISION GRANTING PETITION
Filed: March 2, 2004	:	UNDER 37 CFR 1.313(c)(2)
Attorney Docket No. 17942A	:	

This is a decision on the petition, filed August 31, 2005, under 37 CFR 1.313(c)(2) to withdraw the above-identified application from issue after payment of the issue fee.

The petition is **GRANTED**.

The above-identified application is withdrawn from issue for consideration of a submission under 37 CFR 1.114 (request for continued examination). See 37 CFR 1.313(c)(2).

Petitioner is advised that the issue fee paid on July 26, 2005 in the above-identified application cannot be refunded. If, however, the above-identified application is again allowed, petitioner may request that it be applied towards the issue fee required by the new Notice of Allowance.[1]

Telephone inquiries should be directed to the undersigned at (571) 272-3218.

This matter is being referred to Technology Center AU 2818 for processing of the request for continued examination under 37 CFR 1.114 and for consideration of the Information Disclosure Statement.

Frances Hicks
Petitions Examiner
Office of Petitions

---

[1] *The request to apply the issue fee to the new Notice may be satisfied by completing and returning the new Issue Fee Transmittal Form PTOL-85(b), which includes the following language thereon: "Commissioner for Patents is requested to apply the Issue Fee and Publication Fee (if any) or re-apply any previously paid issue fee to the application identified above." Petitioner is advised that, whether a fee is indicated as being due or not, the Issue Fee Transmittal Form* **must** *be completed and timely submitted to avoid abandonment. Note the language in bold text on the first page of the Notice of Allowance and Fee(s) Due (PTOL-85).*

UNITED STATES PATENT AND TRADEMARK OFFICE

Commissioner for Patents
United States Patent and Trademark Office
P.O. Box 1450
Alexandria, VA 22313-1450
www.uspto.gov

DAVID LEWIS
SUITE 200B
1250 AVIATION AVENUE
SAN JOSE, CA 95126

COPY MAILED

AUG 31 2006

OFFICE OF PETITIONS

In re Application of :
Michael Fiske :
Application No. 10/791,249 :
Filed: March 2, 2004 :
Attorney Docket No. 11-2 :

DECISION ON PETITION
UNDER 37 CFR 1.137(b)

This is a decision on the petition, filed July 31, 2006, which is being treated as a petition under 37 CFR 1.137(b) to revive the instant nonprovisional application for failure to timely notify the U.S. Patent and Trademark (USPTO) of the filing of an application in a foreign country, or under a multinational treaty that requires publication of applications eighteen months after filing. *See* 37 CFR 1.137(f).

The petition is **DISMISSED AS MOOT** in view of the request filed August 4, 2006 requesting withdrawal of the petition under 37 CFR 1.137(b).

In view of the withdrawal of the petition to revive, petitioner is advised that no consideration has been given on the merits of either the petition to revive or the reasons for requesting withdrawal of the petition to revive.

The previous Request and Certification under 35 U.S.C. § 122(b)(2)(B)(i) has been rescinded. A Communication Regarding Rescission of Nonpublication Request and/or Notice of Foreign Filing, which sets forth the projected publication date of November 16, 2006, was mailed on August 7, 2006.

As requested, the $750 petition fee will be refunded to petitioner's deposit account in due course. Telephone inquiries concerning this decision should be directed to the undersigned at (571) 272-3218.

Frances Hicks
Petitions Examiner
Office of Petitions

UNITED STATES PATENT AND TRADEMARK OFFICE

Commissioner for Patents
United States Patent and Trademark Office
P.O. Box 1450
Alexandria, VA 22313-1450
www.uspto.gov

STAAS & HALSEY LLP
SUITE 700
1201 NEW YORK AVENUE, N.W.
WASHINGTON, DC 20005

COPY MAILED

DEC 29 2004

OFFICE OF PETITIONS

In re Application of	:	
Takeshi Hirose	:	
Application No. 10/791,273	:	DECISION REFUSING STATUS
Filed: March 3, 2004	:	UNDER 37 CFR 1.47(b)
For: POWER SOURCE CONTROL DEVICE FOR ELECTRONIC DEVICE	:	

This is in response to the petition under 37 CFR 1.47(b), filed November 24, 2004.

The petition is dismissed.

Rule 47 applicant is given TWO MONTHS from the mailing date of this decision to respond, correcting the below-noted deficiencies. Any response should be entitled "Request for Reconsideration of Petition Under 37 CFR 1.47(b)" and may include an oath or declaration executed by the inventor. Failure to respond will result in abandonment of the application. Any extensions of time will be governed by 37 CFR 1.136(a).

The above-identified application was filed on March 3, 2004 without an executed oath or declaration and naming Takeshi Hirose as the sole inventor.

Accordingly, on May 25, 2004, a "Notice to File Missing Parts of Application" was mailed, requiring an executed oath or declaration and a filing fee, and a surcharge for their late filing.

In response, on November 24, 2004, the instant petition and a four (4) month extension of time were filed.

A grantable petition under 37 CFR 1.47(b) requires:

(1) proof that the non-signing inventor cannot be reached or refuses to sign the oath or declaration;

(2) an acceptable oath or declaration;

(3) the petition fee;

(4) a statement of the last known address of the non-signing inventor;

(5) proof of proprietary interest; and

(6) proof of irreparable damage.

Applicant lacks item (5), as set forth above.

Rule 47 applicant failed to show or provide proof that Fujitsu Limited (Fujitsu) has sufficient proprietary interest in the subject matter to justify the filing of the application (see MPEP 409.03(f)).

The "Request for Application Patent" (Translated) states:

"Deed of Assignment
To FUJITSU LIMITED
This is to acknowledge that the inventor assigned all rights of the above invention for patent in both Japan and foreign countries according to the company rules of FUJITSU LIMITED."

However, a copy (translated) of the document that makes the above assignment has not been submitted. A copy should be submitted in any request for reconsideration that Rule 47 Applicant may wish to file.

Please note, acceptable proof may also include a copy of the employment agreement between the non-signing inventor and the Fujitsu, a copy of an assignment agreement showing that the invention disclosed in the application is assigned to Fujitsu, or a legal memorandum signed by an attorney familiar with the law of the jurisdiction stating that a court of competent jurisdiction would by the weight of authority in that jurisdiction award the title of the invention to Fujitsu.

Further correspondence with respect to this matter should be addressed as follows:

By mail: Mail Stop Petition
Commissioner for Patents
Box 1450
Alexandria, VA 22313

By FAX: (703)308-6916
Attn: Office of Petitions

By hand: Customer Service Window
2011 South Clark Place
Crystal Plaza Two, Lobby, Room 1B03
Arlington, VA 22202

Telephone inquiries should be directed to the undersigned at (571)272-3228.

Edward J. Tannouse
Petitions Attorney
Office of Petitions
United States Patent and Trademark Office

UNITED STATES PATENT AND TRADEMARK OFFICE

Commissioner for Patents
United States Patent and Trademark Office
P.O. Box 1450
Alexandria, VA 22313-1450
www.uspto.gov
DIW 08-04

GUILFORD PHARMACEUTICALS C/O
FOLEY & LARDNER
3000 K STREET, NW
WASHINGTON DC 20007-5143

COPY MAILED

AUG 2 7 2004

OFFICE OF PETITIONS

In re Application of	:	
Tsukamoto et al.	:	
Application No. 10/791,278	:	DECISION ON PETITION
Filed: 3 March, 2004	:	
Attorney Docket No. 054707-1263	:	

This is a decision on the petition filed on 19 July, 2004, requesting that the above-identified application be accorded a filing date which is treated as a petition requesting that above-identified application, including five (5) sheets of drawings, be accorded a filing date of 3 March, 2004.

The petition is granted.

On 3 March, 2004, the application was filed.

On 24 May, 2004, Initial Patent Examination Division mailed a Notice of Incomplete Nonprovisional Application, stating that the application had been deposited without drawings, and that application should reconsider whether drawings were necessary under 35 U.S.C. § 113 (first sentence). The Notice stated that the filing date would be the date of receipt of the missing drawings. The Notice also stated that the statutory basic filing fee, additional claim fees, oath or declaration, and surcharge for their late filing was also missing.

In response, on 19 July, 2004, the present petition and a copy of five (5) sheets of drawings, was filed, along with the statutory basic filing fee, additional claim fees, surcharge, petition fee, and declaration. Petitioners argue that five (5) drawing sheets was filed with the other application papers on 3 March, 2004, but were subsequently misplaced in the U.S. Patent and Trademark Office (Office). In support, a copy of petitioners' postcard

receipt was supplied with the present petition. The postcard receipt shows an Office date stamp of 3 March, 2004, and identifies the application by the first named inventor's names, invention title, and attorney docket number, and acknowledges receipt of, *inter alia*, five (5) sheets of drawings. Petitioners request that the application, including the five (5) sheets of drawings, be accorded a filing date of 3 March, 2004.

A review of the record reveals that no sheets of drawings received on 3 March, 2004, are located among the application papers received on that date. However, the evidence is convincing that the application papers deposited on 3 March, 2004, included five (5) sheets of drawings, which were subsequently misplaced in the Office. Therefore, the application, including five (5) sheets of drawings, is entitled to a filing date of 3 March, 2004.

In view of the above, the petition is granted. The petition fee of $130.00 will be credited to counsel's deposit account, No. 19-0741.

The application will be processed with the copy of the five (5) sheets of drawings supplied on 19 July, 2004, as a part of the original disclosure.

The application is being returned to Initial Patent Examination Division for further processing with a filing date of 3 March, 2004, using the application papers filed on that date, and the copy of five (5) sheets of drawings supplied with the present petition, and for an indication in Office records that five (5) sheets of drawings were present on filing.

Telephone inquiries should be directed to the undersigned at 703-308-6918.

DWood

Douglas I. Wood
Senior Petitions Attorney
Office of Petitions

UNITED STATES PATENT AND TRADEMARK OFFICE

COMMISSIONER FOR PATENTS
UNITED STATES PATENT AND TRADEMARK OFFICE
P.O. BOX 1450
ALEXANDRIA, VA 22313-1450
www.uspto.gov

ARNOLD & PORTER LLP (20595)
ATTN: IP DOCKETING DEPT.
555 TWELFTH STREET, NW
WASHINGTON DC 20004

COPY MAILED

JAN 05 2007

OFFICE OF PETITIONS

In re Patent No. 7,125,907 :
Issued: October 24, 2006 :
Application No. 10/791,278 : ON PETITION
Filed: March 3, 2004 :
Attorney Docket No. 054707-1263 :

This is a decision on the petition under 37 CFR 1.182 filed June 15, 2006, to change the order of inventorship in the above-identified patented file.

The petition is **DISMISSED**.

Judge Schall in *Fina Technology Inc. v. Ewen*, 60 USPQ2d 1314 (CA FC 2001), stated:

> Whenever a mistake of a clerical or typographical nature, or of minor character, which was not the fault of the Patent and Trademark Office, appears in a patent and a showing has been made that such mistake occurred in good faith, the Director[1] may, upon payment of the required fee, issue a certificate of correction, if the correction does not involve such changes in the patent as would constitute new matter or would require re-examination. Such patent, together with the certificate, shall have the same effect and operation in law on the trial of actions for causes thereafter arising as if the same had been originally issued in such corrected form. Section 255 does not provide for action by a district court.

---

[1] Effective March 29, 2000, the title of the head of the Patent and Trademark Office ("PTO") was changed from "Commissioner" to "Director." Pub. L. No. 106-113, 113 Stat.1501A-582 (1999). Although the district court and the parties refer to the head of the PTO by using the title "Commissioner,"we use the term "Director" to avoid confusion with the current statutory language.

Rather, the statute permits only the Director to issue a certificate of correction for a clerical error. Furthermore, the order of inventorship does not appear to be the type of mistake contemplated by §255. Examples of mistakes that fall under §255 typically include correcting a misspelled word or adding a prior art reference that was submitted to and discussed by the examiner but inadvertently omitted by the applicant on PTO Form 1449 for listing references. *See In re Arnott*, 19 USPQ2d 1049, 1053 (Comm'r Pat. 1991). The order of inventors in the heading of a patent is taken by the PTO directly from the order in which the names appear in the original oath or declaration. Man. Pat. Exam. P., §605.04(f) (7th ed. rev. 1 2000). According to the Manual of Patent Examining Procedure, "no changes will be made [by the Director to the order of inventors] except when a petition under 37 C.F.R. 1.182 is granted."[2] Id. In short, the order of inventors is not a clerical error contemplated by § 255, and cannot be corrected in a judicial proceeding under that provision.

It is not problematic for district courts to lack the authority to correct the order of inventors because "the particular order in which the names appear is of no consequence insofar as the legal rights of the joint applicants are concerned." Id. As we stated in Fina I, "if the inventors are properly named on the patent, Fina has no concerns about invalidity of the patent over inventorship problems." 123 F.3d at 1471, 43 USPQ2d at 1940.

---

[2] 37 CFR 1.182 (2000) concerns situations that are not specifically provided for in other regulations and authorizes the Director to decide each case that arises in accordance with the merits of the situation.

In view of the above, since the order in which the names appear on the printed patent is of no consequence insofar as the legal rights of the joint applicants are concerned, and since there was no clerical error as contemplated by 35 U.S.C. 255, the petition under 37 CFR 1.182 to change the order of inventorship in the above-identified patent must be dismissed. Accordingly, no certificate of correction will be issued to reflect the desired order of inventorship.

Any questions concerning this decision may be directed to Alesia M. Brown at (571) 272-3205.

This application is being returned to Files Repository.

Alesia M. Brown
Petitions Attorney
Office of Petitions

UNITED STATES PATENT AND TRADEMARK OFFICE

UNITED STATES DEPARTMENT OF COMMERCE
United States Patent and Trademark Office
Address: COMMISSIONER FOR PATENTS
P.O. Box 1450
Alexandria, Virginia 22313-1450
www.uspto.gov

APPL NO.	FILING OR 371 (c) DATE	ART UNIT	FIL FEE REC'D	ATTY.DOCKET NO	DRAWINGS	TOT CLMS	IND CLMS
10/791,297	03/01/2004	2635	2070	ANDIP024A	11	42	12

CONFIRMATION NO. 3525

022434
BEYER WEAVER & THOMAS LLP
P.O. BOX 778
BERKELEY, CA 94704-0778

CORRECTED FILING RECEIPT

OC000000014429833

Date Mailed: 11/22/2004

Receipt is acknowledged of this regular Patent Application. It will be considered in its order and you will be notified as to the results of the examination. Be sure to provide the U.S. APPLICATION NUMBER, FILING DATE, NAME OF APPLICANT, and TITLE OF INVENTION when inquiring about this application. Fees transmitted by check or draft are subject to collection. Please verify the accuracy of the data presented on this receipt. **If an error is noted on this Filing Receipt, please write to the Office of Initial Patent Examination's Filing Receipt Corrections, facsimile number 703-746-9195. Please provide a copy of this Filing Receipt with the changes noted thereon. If you received a "Notice to File Missing Parts" for this application, please submit any corrections to this Filing Receipt with your reply to the Notice. When the USPTO processes the reply to the Notice, the USPTO will generate another Filing Receipt incorporating the requested corrections (if appropriate).**

Applicant(s)

Silvano Gai, San Jose, CA;
Thomas James Edsall, Cupertino, CA;

Assignment For Published Patent Application

Cisco Technology, Inc., San Jose, CA

Power of Attorney: The patent practitioners associated with Customer Number **022434**.

Domestic Priority data as claimed by applicant

Foreign Applications

If Required, Foreign Filing License Granted: 05/24/2004

The country code and number of your priority application, to be used for filing abroad under the Paris Convention, is US10/791,297

Projected Publication Date: 09/01/2005

Non-Publication Request: No

Early Publication Request: No

Title

Security groups for VLANs

Preliminary Class

340

LICENSE FOR FOREIGN FILING UNDER
Title 35, United States Code, Section 184
Title 37, Code of Federal Regulations, 5.11 & 5.15

GRANTED

The applicant has been granted a license under 35 U.S.C. 184, if the phrase "IF REQUIRED, FOREIGN FILING LICENSE GRANTED" followed by a date appears on this form. Such licenses are issued in all applications where the conditions for issuance of a license have been met, regardless of whether or not a license may be required as set forth in 37 CFR 5.15. The scope and limitations of this license are set forth in 37 CFR 5.15(a) unless an earlier license has been issued under 37 CFR 5.15(b). The license is subject to revocation upon written notification. The date indicated is the effective date of the license, unless an earlier license of similar scope has been granted under 37 CFR 5.13 or 5.14.

This license is to be retained by the licensee and may be used at any time on or after the effective date thereof unless it is revoked. This license is automatically transferred to any related applications(s) filed under 37 CFR 1.53(d). This license is not retroactive.

The grant of a license does not in any way lessen the responsibility of a licensee for the security of the subject matter as imposed by any Government contract or the provisions of existing laws relating to espionage and the national security or the export of technical data. Licensees should apprise themselves of current regulations especially with respect to certain countries, of other agencies, particularly the Office of Defense Trade Controls, Department of State (with respect to Arms, Munitions and Implements of War (22 CFR 121-128)); the Office of Export Administration, Department of Commerce (15 CFR 370.10 (j)); the Office of Foreign Assets Control, Department of Treasury (31 CFR Parts 500+) and the Department of Energy.

NOT GRANTED

No license under 35 U.S.C. 184 has been granted at this time, if the phrase "IF REQUIRED, FOREIGN FILING LICENSE GRANTED" DOES NOT appear on this form. Applicant may still petition for a license under 37 CFR 5.12, if a license is desired before the expiration of 6 months from the filing date of the application. If 6 months has lapsed from the filing date of this application and the licensee has not received any indication of a secrecy order under 35 U.S.C. 181, the licensee may foreign file the application pursuant to 37 CFR 5.15(b).

UNITED STATES PATENT AND TRADEMARK OFFICE

Commissioner for Patents
United States Patent and Trademark Office
P.O. Box 1450
Alexandria, VA 22313-1450
www.uspto.gov

BUTZER & CHEN LAW LLC
870 HIGH STREET SUITE 104
WORTHINGTON OH 43085

COPY MAILED

DEC 15 2006

OFFICE OF PETITIONS

In re Application of	:	
Butzer, et al.	:	DECISION ON PETITION
Application No. 10/791,331	:	
Filed: March 2, 2004	:	
Docket No. GLB-002	:	

This is a decision on the petition to withdraw the holding of abandonment under 37 CFR 1.181, filed September 30, 2006.

The petition under 37 CFR 1.181 is **DISMISSED** as moot.

The Office mailed a Notice of Abandonment on June 27, 2006. Applicants filed the instant petition to withdraw the holding of abandonment on September 30, 2006. Prior to a decision on the petition being rendered, the Office mailed a Notice of Rescinded Abandonment on October 31, 2006. In view thereof, consideration of the instant petition is unnecessary.

The mater is being forwarded to the Office of Patent Publication for processing into a patent.

Telephone inquiries related to this decision should be directed to the undersigned at (571)272-3207.

Cliff Congo
Petitions Attorney
Office of Petitions

UNITED STATES PATENT AND TRADEMARK OFFICE

UNITED STATES DEPARTMENT OF COMMERCE
United States Patent and Trademark Office
Address: COMMISSIONER FOR PATENTS
P.O. Box 1450
Alexandria, Virginia 22313-1450
www.uspto.gov

APPL NO.	FILING OR 371 (c) DATE	ART UNIT	FIL FEE REC'D	ATTY.DOCKET NO	DRAWINGS	TOT CLMS	IND CLMS
10/791,333	03/02/2004	2819	950	55123P268	4	30	3

CONFIRMATION NO. 1843

08791
BLAKELY SOKOLOFF TAYLOR & ZAFMAN
12400 WILSHIRE BOULEVARD
SEVENTH FLOOR
LOS ANGELES, CA 90025-1030

CORRECTED FILING RECEIPT

OC000000013634553

Date Mailed: 08/25/2004

Receipt is acknowledged of this regular Patent Application. It will be considered in its order and you will be notified as to the results of the examination. Be sure to provide the U.S. APPLICATION NUMBER, FILING DATE, NAME OF APPLICANT, and TITLE OF INVENTION when inquiring about this application. Fees transmitted by check or draft are subject to collection. Please verify the accuracy of the data presented on this receipt. **If an error is noted on this Filing Receipt, please write to the Office of Initial Patent Examination's Filing Receipt Corrections, facsimile number 703-746-9195. Please provide a copy of this Filing Receipt with the changes noted thereon. If you received a "Notice to File Missing Parts" for this application, please submit any corrections to this Filing Receipt with your reply to the Notice. When the USPTO processes the reply to the Notice, the USPTO will generate another Filing Receipt incorporating the requested corrections (if appropriate).**

Applicant(s)

Simon Bevan Churchill, Whitchurch, UNITED KINGDOM;
Gaurang Arvind Shah, San Jose, CA;
David Webb, Hungerford, UNITED KINGDOM;
Bharath Mandyam, Sunnyvale, CA;

Domestic Priority data as claimed by applicant

Foreign Applications

If Required, Foreign Filing License Granted: 05/24/2004

Projected Publication Date: Request for Non-Publication Acknowledged

Non-Publication Request: Yes

Early Publication Request: No

Title

Multichannel high resolution segmented resistor string digital-to-analog converters

Preliminary Class

341

LICENSE FOR FOREIGN FILING UNDER
Title 35, United States Code, Section 184
Title 37, Code of Federal Regulations, 5.11 & 5.15

GRANTED

The applicant has been granted a license under 35 U.S.C. 184, if the phrase "IF REQUIRED, FOREIGN FILING LICENSE GRANTED" followed by a date appears on this form. Such licenses are issued in all applications where the conditions for issuance of a license have been met, regardless of whether or not a license may be required as set forth in 37 CFR 5.15. The scope and limitations of this license are set forth in 37 CFR 5.15(a) unless an earlier license has been issued under 37 CFR 5.15(b). The license is subject to revocation upon written notification. The date indicated is the effective date of the license, unless an earlier license of similar scope has been granted under 37 CFR 5.13 or 5.14.

This license is to be retained by the licensee and may be used at any time on or after the effective date thereof unless it is revoked. This license is automatically transferred to any related applications(s) filed under 37 CFR 1.53(d). This license is not retroactive.

The grant of a license does not in any way lessen the responsibility of a licensee for the security of the subject matter as imposed by any Government contract or the provisions of existing laws relating to espionage and the national security or the export of technical data. Licensees should apprise themselves of current regulations especially with respect to certain countries, of other agencies, particularly the Office of Defense Trade Controls, Department of State (with respect to Arms, Munitions and Implements of War (22 CFR 121-128)); the Office of Export Administration, Department of Commerce (15 CFR 370.10 (j)); the Office of Foreign Assets Control, Department of Treasury (31 CFR Parts 500+) and the Department of Energy.

NOT GRANTED

No license under 35 U.S.C. 184 has been granted at this time, if the phrase "IF REQUIRED, FOREIGN FILING LICENSE GRANTED" DOES NOT appear on this form. Applicant may still petition for a license under 37 CFR 5.12, if a license is desired before the expiration of 6 months from the filing date of the application. If 6 months has lapsed from the filing date of this application and the licensee has not received any indication of a secrecy order under 35 U.S.C. 181, the licensee may foreign file the application pursuant to 37 CFR 5.15(b).

UNITED STATES PATENT AND TRADEMARK OFFICE

Commissioner for Patents
United States Patent and Trademark Office
P.O. Box 1450
Alexandria, VA 22313-1450
www.uspto.gov

BLAKELY SOKOLOFF TAYLOR & ZAFMAN
12400 WILSHIRE BOULEVARD
SEVENTH FLOOR
LOS ANGELES CA 90025-1030

COPY MAILED

OCT 1 2 2006

OFFICE OF PETITIONS

In re Application of :
Kim, et al. :
Application No.: 10/791,334 : ON PETITION
Filed: March 1, 2004 :
Attorney Docket No. 4551P025 :

This is in response to the petition under 37 CFR 1.137(b) filed April 20, 2006.

The petition under 37 CFR 1.137(b) is **granted**.

A "Notice to File Missing Parts of Nonprovisional Application" (the "Notice") was mailed by the Office on May 26, 2004, allowing a shortened period of reply of two-months from its mailing date. Extensions of time set for reply were available pursuant to 37 CFR 1.136(a). The Notice required an oath or declaration to be filed and $130.00 surcharge for the late filing of the same, and replacement drawings. A response was filed on October 4, 2004, but did not include replacement drawings. A Notice of Incomplete Reply was mailed on October 18, 2004, with period for response remaining as set forth in the Notice to File Missing Parts of Nonprovisional Application. No further responses were received within the allowable period and the application became abandoned on November 27, 2004. A Notice of Abandonment was mailed on March 27, 2006.

The replacement drawings filed April 20, 2006, are noted.

The above-identified application has been abandoned for an extended period of time. The Patent and Trademark Office is relying on petitioner's duty of candor and good faith and accepting the statement that the entire delay in filing the required reply form the due date for the reply until the filing of a grantable petition pursuant to 37 CFR 1.137(b) was unintentional. See Changes to Patent Practice and Procedure, 62 Fed. Reg. at 53160 and 53178; 1203 Off. Gaz. Pat. Office at 88 and 103 (responses to comments 64 and 109) (applicant obligated under 37 CFR 10.18 to inquire into the underlying facts and circumstances when providing the statement required by 37 CFR 1.137(b) to the Patent and Trademark Office.

It is not apparent whether the person signing the statement of unintentional delay was in a position to have firsthand or direct knowledge of the facts and circumstances of the delay at issue. Nevertheless, such statement is being treated as having been made as the result of a reasonable inquiry into the facts and circumstances of such delay. See 37 CFR 10.18(b) and Changes to Patent Practice and Procedure; Final Rule Notice, 62 Fed. Reg. 53131, 53178 (October 10, 1997), 1203 Off. Gaz. Pat. Office 63, 103 (October 21, 1997). In the event that such an inquiry has not been made, petitioner must make such an inquiry. If such inquiry results in the discovery that it is not correct that the entire delay in filing the required reply from the due

date for the reply until the filing of a grantable petition pursuant to 37 CFR 1.137(b) was unintentional, petitioner must notify the Office.

There is no indication that the person signing the instant petition was ever given a power of attorney or authorization of agent to prosecute the above-identified application. Accordingly, the request to change the correspondence address of record, filed April 20, 2006, will not be entered at this juncture. If the person signing the instant petition desires to receive future correspondence regarding this application, the appropriate power of attorney or authorization of agent must be submitted. While a courtesy copy of this decision is being mailed to the person signing the instant petition, all future correspondence will be directed to the address of currently of record until such time as appropriate instructions are received to the contrary.

This application is being directed to the Office of Initial Patent Examination for further processing.

Telephone inquiries regarding this decision should be directed to the undersigned at (571) 272-3222.

Kenya A. McLaughlin
Petitions Attorney
Office of Petitions

cc:
Tarek N. Fahmi
Sonnenschien Nath & Rosenthal LLP
PO Box 061080
Wacker Drive Station
Sears Tower
Chicago, IL 60606-1080

UNITED STATES PATENT AND TRADEMARK OFFICE

UNITED STATES DEPARTMENT OF COMMERCE
United States Patent and Trademark Office
Address: COMMISSIONER FOR PATENTS
P.O. Box 1450
Alexandria, Virginia 22313-1450
www.uspto.gov

SCHWABE, WILLIAMSON & WYATT, P.C.
1420 FIFTH, SUITE 3010
SEATTLE, WA 98101

Mail Date: 04/21/2010

Applicant	: Charles Frank	: DECISION ON REQUEST FOR
Patent Number	: 7643476	: RECALCULATION of PATENT
Issue Date	: 01/05/2010	: TERM ADJUSTMENT IN VIEW
Appliction No	: 10/791,338	: OF WYETH AND NOTICE OF INTENT TO
Filed	: 03/01/2004	: ISSUE CERTIFICATE OF CORRECTION
		:

The Request for Recalculation is **GRANTED** to the extent indicated.

The patent term adjustment has been determined to be **1114** days. The USPTO will *sua sponte* issue a certificate of correction reflecting the amount of PTA days determined by the recalculation.

Prior to the issuance of the certificate of correction, the USPTO will afford patentee an opportunity to be heard and request reconsideration. Accordingly, patentee has **one month or thirty (30) days**, whichever is longer, to file a request for reconsideration of this patent term adjustment calculation. See 35 U.S.C. 154(b)(3)(B)(ii) and 37 CFR 1.322(a)(4). No extensions of time will be granted under 37 CFR 1.136.

Patentee should use document code PET.OP if electronically filing a request for reconsideration of this patent term adjustment calculation. The patentee must also include the information required by 37 CFR 1.705(b)(2) and the fee required by 37 CFR 1.18(e). If patentee does not file a timely request for reconsideration of this patent term adjustment calculation including the information required by 37 CFR 1.705(b)(2) and the fee required by 37 CFR 1.18(e), the USPTO will issue a certificate of correction reflecting the PTA determination noted above.

Patentee should be aware that in order to preserve the right to review in the United States District Court for the District of Columbia of the USPTO patent term adjustment determination, patentee must ensure that he or she also take the steps required under 35 U.S.C. 154(b)(4)(A) in a timely manner. Nothing in the request for recalculation should be construed as providing an alternative time frame for commencing a civil action under 35 U.S.C. 154(b)(4)(A).

Any questions concerning this decision should be directed to the Office of Patent Legal Administration at 571-272-7702.

UNITED STATES PATENT AND TRADEMARK OFFICE

Commissioner for Patents
United States Patent and Trademark Office
P.O. Box 1450
Alexandria, VA 22313-1450
www.uspto.gov

WANG, HARTMANN & GIBBS
1301 DOVE STREET
SUITE 1050
NEWPORT BEACH, CA 92660-2812

COPY MAILED

NOV 26 2007

OFFICE OF PETITIONS

In re Application of :
Henry Cai, et al. :
Application No. 10/791,351 : DECISION ON PETITION
Filed: March 1, 2004 : TO WITHDRAW
Attorney Docket No. B002-8000 : FROM RECORD
:

This is a decision on the Request to Withdraw as attorney or agent of record under 37 C.F.R. § 1.36(b) filed July 24, 2007.

The request is **APPROVED**.

A grantable request to withdraw as attorney/agent of record must be signed by every attorney/agent seeking to withdraw or contain a clear indication that one attorney is signing on behalf of another/others. A request to withdraw will not be approved unless at least 30 (thirty) days would remain between the date of approval and the later of the expiration date of a time to file a response or the expiration date of the maximum time period which can be extended under 37 C.F.R. § 1.136(a).

The request was signed by Larry E. Severin on behalf of all attorneys of record who are associated with this application.

All attorneys/agents associated with this application have been withdrawn.

Applicant is reminded that there is no attorney of record at this time.

The correspondence address of record has been changed and the new correspondence address is the address indicated below.

There is an outstanding Office action mailed May 21, 2007 that requires a reply from the applicant.

Telephone inquiries concerning this decision should be directed to undersigned at 571-272-1642.

April M. Wise
Petitions Examiner
Office of Petitions

cc: HENRY CAI
C/O BROADBAND SOFTWARE, INC.
19800 MCARTHUR BLVD.
SUITE 830
IRVINE, CA 92612

UNITED STATES PATENT AND TRADEMARK OFFICE

UNITED STATES DEPARTMENT OF COMMERCE
United States Patent and Trademark Office
Address: COMMISSIONER FOR PATENTS
P.O. Box 1450
Alexandria, Virginia 22313-1450
www.uspto.gov

APPLICATION NUMBER	FILING OR 371(C) DATE	FIRST NAMED APPLICANT	ATTY. DOCKET NO./TITLE
10/791,351	03/01/2004	Henry Cai	B002-8000

CONFIRMATION NO. 2391

Wang, Hartmann & Gibbs
1301 Dove Street
Suite 1050
Newport Beach, CA 92660-2812

POWER OF ATTORNEY NOTICE

Date Mailed: 11/23/2007

NOTICE REGARDING CHANGE OF POWER OF ATTORNEY

This is in response to the Power of Attorney filed 07/24/2007.

- The withdrawal as attorney in this application has been accepted. Future correspondence will be mailed to the new address of record. 37 CFR 1.33.

/amwise/

Office of Initial Patent Examination (571) 272-4000 or 1-800-PTO-9199

UNITED STATES PATENT AND TRADEMARK OFFICE

UNITED STATES DEPARTMENT OF COMMERCE
United States Patent and Trademark Office
Address: COMMISSIONER FOR PATENTS
P.O. Box 1450
Alexandria, Virginia 22313-1450
www.uspto.gov

Merchant & Gould P.C.
P.O. Box 2903
Minneapolis, MN 55402-0903

Mail Date: 04/21/2010

Applicant	: Joseph Coffey	: DECISION ON REQUEST FOR
Patent Number	: 7646981	: RECALCULATION of PATENT
Issue Date	: 01/12/2010	: TERM ADJUSTMENT IN VIEW
Appliction No	: 10/791,365	: OF WYETH AND NOTICE OF INTENT TO
Filed	: 03/01/2004	: ISSUE CERTIFICATE OF CORRECTION
		:

The Request for Recalculation is **GRANTED** to the extent indicated.

The patent term adjustment has been determined to be **1421** days. The USPTO will *sua sponte* issue a certificate of correction reflecting the amount of PTA days determined by the recalculation.

Prior to the issuance of the certificate of correction, the USPTO will afford patentee an opportunity to be heard and request reconsideration. Accordingly, patentee has **one month or thirty (30) days**, whichever is longer, to file a request for reconsideration of this patent term adjustment calculation. See 35 U.S.C. 154(b)(3)(B)(ii) and 37 CFR 1.322(a)(4). No extensions of time will be granted under 37 CFR 1.136.

Patentee should use document code PET.OP if electronically filing a request for reconsideration of this patent term adjustment calculation. The patentee must also include the information required by 37 CFR 1.705(b)(2) and the fee required by 37 CFR 1.18(e). If patentee does not file a timely request for reconsideration of this patent term adjustment calculation including the information required by 37 CFR 1.705(b)(2) and the fee required by 37 CFR 1.18(e), the USPTO will issue a certificate of correction reflecting the PTA determination noted above.

Patentee should be aware that in order to preserve the right to review in the United States District Court for the District of Columbia of the USPTO patent term adjustment determination, patentee must ensure that he or she also take the steps required under 35 U.S.C. 154(b)(4)(A) in a timely manner. Nothing in the request for recalculation should be construed as providing an alternative time frame for commencing a civil action under 35 U.S.C. 154(b)(4)(A).

Any questions concerning this decision should be directed to the Office of Patent Legal Administration at 571-272-7702.

UNITED STATES PATENT AND TRADEMARK OFFICE

COMMISSIONER FOR PATENTS
UNITED STATES PATENT AND TRADEMARK OFFICE
P.O. BOX 1450
ALEXANDRIA, VA 22313-1450
WWW.USPTO.GOV

Paper No. None

Colin P. Abrahams
Suite 400
5850 Canoga Avenue
Woodland Hills CA 91367

COPY MAILED

SEP 21 2007

OFFICE OF PETITIONS

In re Application of :
Dennis S. Janovici et al. :
Application No. 10/791,372 : DECISION ON PETITION
Filed: March 1, 2004 : PURSUANT TO
Attorney Docket No. 1131-102.US : 37 C.F.R. § 1.181(A)
Title: CLAMP CONNECTION AND :
RELEASE DEVICE :

BACKGROUND

This is a decision on the petition pursuant to 37 C.F.R. § 1.181(a), filed May 21, 2007, to withdraw the holding of abandonment.

The above-identified application became abandoned for failure to fully reply in a timely manner to the Notice of Missing Parts (first notice), mailed July 2, 2004, which set a shortened statutory period for reply of two months. A response was received on October 8, 2004, along with a one-month extension of time. On October 21, 2004, the Office mailed a Notice of Incomplete Reply (Nonprovisional) (second notice), setting forth that Applicant's response was deficient in the amount of $18, as he failed to submit the complete amount that was due for the additional claim fees. A response was received on October 28, 2004, but Applicant failed to include the required $18. No additional extensions of time under the provisions of 37 C.F.R. §1.136(a) were requested, and no further responses were received. Accordingly, the above-identified application became abandoned on January 9, 2005. A notice of abandonment was mailed on May 3, 2007.

RELEVANT PORTIONS OF THE C.F.R.

37 C.F.R. § 1.16(i): National application filing, search, and examination fees.

In addition to the basic filing fee in an application, other than a provisional application, **for filing** or later presentation at any other time of each claim (whether dependent or independent) in excess of 20 (note that § 1.75(c) indicates how multiple dependent claims are considered for fee calculation purposes):

By a small entity (§ 1.27(a))	$25.00
By other than a small entity	$50.00

(Emphasis added).

(It is noted that at the time that this notice was mailed, the fees were $9 and $18, respectively).

37 C.F.R. § 1.134: Time period for reply to an Office action.

An Office action will notify the applicant of any non-statutory or shortened statutory time period set for reply to an Office action. Unless the applicant is notified in writing that a reply is required in less than six months, a maximum period of six months is allowed.

37 C.F.R. § 1.135: Abandonment for failure to reply within time period.

(a) If an applicant of a patent application fails to reply within the time period provided under § 1.134 and § 1.136, the application will become abandoned unless an Office action indicates otherwise.

(b) Prosecution of an application to save it from abandonment pursuant to paragraph (a) of this section must include such complete and proper reply as the condition of the application may require. The admission of, or refusal to admit, any amendment after final rejection or any amendment not responsive to the last action, or any related proceedings, will not operate to save the application from abandonment.

(c) When reply by the applicant is a bona fide attempt to advance the application to final action, and is substantially a complete reply to the non-final Office action, but consideration of some matter or compliance with some requirement has been inadvertently omitted, applicant may be given a new time period for reply under § 1.134 to supply the omission.

ANALYSIS

The showing in the present petition is not sufficient to withdraw the holding of abandonment because it is incomplete.

Petitioner has asserted that a response was submitted on October 4, 2004, and has included a copy of the same.

This response has been located in the electronic file, and it is noted that this is the above-mentioned incomplete response that was received in the Office on October 8, 2004. The response has been reviewed, and it is clear that Petitioner was aware that the response was deficient, however it is equally clear that he did not believe that the additional claim fees were due: the response of October 28, 2004 sets forth, *in pertinent part*:

> Please cancel claims 8 and 9 without prejudice. With the cancellation of these claims, no further fees are required.

The present application went abandoned not due to the non-receipt of a response, but rather due to the fact that Petitioner failed to submit the required $18.

The language of Rule § 1.16(i), reproduced above, makes it clear that a fee is assessed for the filing, and not the examination, of each claim in excess of 20. As such, the cancellation of a claim subsequent to the filing of the same does not obviate an Applicant's obligation to pay for an excess claim that was filed.

It follows that the present petition must be **DISMISSED.**

CONCLUSION

Any reply must be submitted within **TWO MONTHS** from the mail date of this decision. Extensions of time under 37 C.F.R. § 1.136(a) are permitted. The reply should include a cover letter entitled "Renewed Petition Under 37 C.F.R. § 1.181(a)." This is not a final agency action within the meaning of 5 U.S.C § 704. The renewed petition should indicate in a prominent manner that the attorney handling this matter is Paul Shanoski, and may be submitted by mail[1], hand-delivery[2], or facsimile[3]. Registered users of EFS-Web may alternatively submit a response to this decision via EFS-Web[4].

If responding by mail, Petitioner is advised not to place the undersigned's name on the envelope. Only the information that

---

1 Mail Stop Petition, Commissioner for Patents, United States Patent and Trademark Office, P.O. Box 1450, Alexandria, VA, 22313-1450.
2 Customer Window, Randolph Building, 401 Dulaney Street, Alexandria, VA, 22314.
3 (571) 273-8300- please note this is a central facsimile number.
4 https://sportal.uspto.gov/authenticate/authenticateuserlocalepf.html

appears in the footnote should be included - adding anything else to the address will delay the delivery of the response to the undersigned.

Alternatively, Petitioner may wish to consider filing a petition under 37 C.F.R. §§ 1.137(a) and/or (b). Petitioner may download information about these petitions here: http://www.uspto.gov/web/offices/pac/mpep/documents/0700_711_03_c.htm#sect711.03c

No assurance can be made that any remedy will be forthcoming.

Telephone inquiries **regarding this decision** should be directed to the undersigned at (571) 272-3225[5]. All other inquiries concerning examination procedures or status of the application should be directed to the Technology Center.

Paul Shanoski
Senior Attorney
Office of Petitions
United States Patent and Trademark Office

5 Petitioner will note that all practice before the Office should be in writing, and the action of the Office will be based exclusively on the written record in the Office. See 37 C.F.R. § 1.2. As such, Petitioner is reminded that no telephone discussion may be controlling or considered authority for any further action(s) of Petitioner.

DATE 11-14-07

APPLICATION NUMBER 10/791,372

DOC CODE Pet. Dec. OPAP

DOC DATE

COPY MAILED

NOV 20 2007

OFFICE OF PETITIONS

DELIVER THE ATTACHED FIFLE/DOCUMENT TO THE TC SCANNING CENTER

CONTRACTOR: THE ATTACHED FILE/DOCUMENT MUST BE INDEXED AND SCANNED INTO IFW WITHIN **8** WORK HOURS; UPLOADING OF THE SCANNED IMAGES SHOULD OCCUR NO LATER THAN **16** WORK HOURS FOLLOWING RECEIPT OF THIS REQUEST

AFTER SCANNING, ORIGINAL DOCUMENTS SHOULD BE BOXED IN ACCORDANCE WITH INSTRUCTIONS

UNITED STATES PATENT AND TRADEMARK OFFICE

Commissioner for Patents
United States Patent and Trademark Office
P.O. Box 1450
Alexandria, VA 22313-1450
www.uspto.gov

Paper No. None

Colin P. Abrahams
Suite 400
5850 Canoga Avenue
Woodland Hills CA 91367

COPY MAILED

NOV 20 2007

OFFICE OF PETITIONS

In re Application of :
Dennis S. Janovici et al. :
Application No. 10/791,372 : DECISION ON RENEWED
Filed: March 1, 2004 : PETITION PURSUANT TO
Attorney Docket No. 1131-102.US : 37 C.F.R. § 1.181(A)
Title: CLAMP CONNECTION AND :
RELEASE DEVICE :

BACKGROUND

This is a decision on the renewed petition pursuant to 37 C.F.R. § 1.181(a), filed October 9, 2007, to withdraw the holding of abandonment.

The above-identified application became abandoned for failure to fully reply in a timely manner to the Notice of Missing Parts (first notice), mailed July 2, 2004, which set a shortened statutory period for reply of two months. A response was received on October 8, 2004, along with a one-month extension of time. On October 21, 2004, the Office mailed a Notice of Incomplete Reply (Nonprovisional) (second notice), setting forth that Applicant's response was deficient in the amount of $18, as he failed to submit the complete amount that was due for the additional claim fees. A response was received on October 28, 2004, but Applicant failed to include the required $18. No additional extensions of time under the provisions of 37 C.F.R. § 1.136(a) were requested, and no further responses were received. Accordingly, the above-identified application became abandoned on January 9, 2005. A notice of abandonment was mailed on May 3, 2007.

An original petition was filed on May 21, 2007, and was dismissed via the mailing of a decision on September 21, 2007.

Considering the facts and circumstances of the delay at issue, as set forth on renewed petition, it is concluded that Petitioner has met his burden of establishing that the holding of abandonment should be withdrawn.

Accordingly, the petition under 37 C.F.R. § 1.181(a) is **GRANTED**. The holding of abandonment is **WITHDRAWN**.

The Office of Patent Application Processing (OPAP) will be notified of this decision so that the application may receive further processing.

The general phone number for OPAP is 571-272-4000. Telephone inquiries **regarding this decision** should be directed to the undersigned at (571) 272-3225[1].

Paul Shanoski
Senior Attorney
Office of Petitions
United States Patent and Trademark Office

1 Petitioner will note that all practice before the Office should be in writing, and the action of the Office will be based exclusively on the written record in the Office. See 37 C.F.R. § 1.2. As such, Petitioner is reminded that no telephone discussion may be controlling or considered authority for any further action(s) of Petitioner.

UNITED STATES PATENT AND TRADEMARK OFFICE

Commissioner for Patents
United States Patent and Trademark Office
P.O. Box 1450
Alexandria, VA 22313-1450
www.uspto.gov

AMY E. SIMPSON
PAUL, HASTINGS, JANOFSKY & WALKER LLP
875 15TH STREET, NW
WASHINGTON, DC 20005

MAILED

MAY 28 2009

OFFICE OF PETITIONS

In re Application of	:	
Mark A. Walch	:	DECISION ON PETITION
Application No. 10/791,375	:	TO WITHDRAW
Filed: March 1, 2004	:	FROM RECORD
Attorney Docket No. 67182005.002000	:	

This is a decision on the Request to Withdraw as attorney or agent of record under 37 C.F.R. § 1.36(b), filed May 9, 2005.

The request is **NOT APPROVED** because it is moot.

A review of the file record indicates that on September 29, 2006 the power of attorney to Paul, Hastings, Janofsky & Walker LLP was revoked by the applicant of the patent application. Accordingly, the request to withdraw under 37 C.F.R. § 1.36(b) is moot.

All future communications from the Office will be directed to the below-listed address until otherwise notified by applicant.

Telephone inquires concerning this decision should be directed to the undersigned at 571-272- 7751. All other inquires concerning either the examination or status of the application should be directed to the Technology Center.

Joan Olszewski
Petitions Examiner
Office of Petitions

cc: Baker & McKenzie LLP
Patent Department
2001 Ross Avenue
Suite 2300
Dallas TX 75201

UNITED STATES PATENT AND TRADEMARK OFFICE

UNITED STATES DEPARTMENT OF COMMERCE
United States Patent and Trademark Office
Address: COMMISSIONER FOR PATENTS
P.O. Box 1450
Alexandria, Virginia 22313-1450
www.uspto.gov

HARNESS, DICKEY & PIERCE, P.L.C.
P.O. BOX 828
BLOOMFIELD HILLS, MI 48303

Mail Date: 04/21/2010

Applicant	: Marcos Dantus	: DECISION ON REQUEST FOR
Patent Number	: 7609731	: RECALCULATION of PATENT
Issue Date	: 10/27/2009	: TERM ADJUSTMENT IN VIEW
Appliction No	: 10/791,377	: OF WYETH AND NOTICE OF INTENT TO
Filed	: 03/02/2004	: ISSUE CERTIFICATE OF CORRECTION
		:

The Request for Recalculation is **GRANTED** to the extent indicated.

The patent term adjustment has been determined to be **958** days. The USPTO will *sua sponte* issue a certificate of correction reflecting the amount of PTA days determined by the recalculation.

Prior to the issuance of the certificate of correction, the USPTO will afford patentee an opportunity to be heard and request reconsideration. Accordingly, patentee has **one month or thirty (30) days**, whichever is longer, to file a request for reconsideration of this patent term adjustment calculation. See 35 U.S.C. 154(b)(3)(B)(ii) and 37 CFR 1.322(a)(4). No extensions of time will be granted under 37 CFR 1.136.

Patentee should use document code PET.OP if electronically filing a request for reconsideration of this patent term adjustment calculation. The patentee must also include the information required by 37 CFR 1.705(b)(2) and the fee required by 37 CFR 1.18(e). If patentee does not file a timely request for reconsideration of this patent term adjustment calculation including the information required by 37 CFR 1.705(b)(2) and the fee required by 37 CFR 1.18(e), the USPTO will issue a certificate of correction reflecting the PTA determination noted above.

Patentee should be aware that in order to preserve the right to review in the United States District Court for the District of Columbia of the USPTO patent term adjustment determination, patentee must ensure that he or she also take the steps required under 35 U.S.C. 154(b)(4)(A) in a timely manner. Nothing in the request for recalculation should be construed as providing an alternative time frame for commencing a civil action under 35 U.S.C. 154(b)(4)(A).

Any questions concerning this decision should be directed to the Office of Patent Legal Administration at 571-272-7702.

UNITED STATES PATENT AND TRADEMARK OFFICE

UNITED STATES DEPARTMENT OF COMMERCE
United States Patent and Trademark Office
Address: COMMISSIONER FOR PATENTS
P.O. Box 1450
Alexandria, Virginia 22313-1450
www.uspto.gov

HARNESS, DICKEY & PIERCE, P.L.C.
P.O. BOX 828
BLOOMFIELD HILLS, MI 48303

Mail Date: 05/18/2010

Applicant : Marcos Dantus
Patent Number : 7609731
Issue Date : 10/27/2009
Application No: 10/791,377
Filed : 03/02/2004

: NOTICE CONCERNING IMPROPER
: CALCULATION OF PATENT TERM
: ADJUSTMENT BASED UPON USPTO
: IMPROPERLY MEASURING REDUCTION
: PERIOD UNDER 37 CFR 1.704(c)(10).

The United States Patent and Trademark Office (USPTO) discovered that in processing the recent recalculation decisions mailed in response to patentee's filed Request for Recalculation of Patent Term Adjustment in view of Wyeth, the USPTO improperly measured the reduction period for reductions under 37 CFR 1.704(c)(10). Pursuant to 37 CFR 1.704(c)(10), patentee's reduction begins on the date of filing the amendment under 37 CFR 1.312 ("1.312 amendment") or other related paper and ends on the date that the Office mails a response to the filing of the 1.312 amendment or other paper. It has been discovered that during the recalculation, the calculation failed to the limit the reduction to the mail date of the response to the 1.312 amendment or other paper. Accordingly, patentee's reductions were greater than warranted.

This notice **VACATES** the previous GRANTED request for recalculation and provides patentee with a revised GRANTED recalculation.

The patent term adjustment has been determined to be **1065** days. The USPTO will *sua sponte* issue a certificate of correction reflecting the amount of patent term adjustment (PTA) days determined by the recalculation.

Prior to the issuance of the certificate of correction, the USPTO will afford patentee an opportunity to be heard and request reconsideration. Accordingly, patentee has **one month or thirty (30) days** from the mail date of this notice, whichever is longer, to file a request for reconsideration of this PTA calculation. See 35 U.S.C. § 154(b)(3)(B)(ii) and 37 CFR 1.322(a)(4).

Patentee should use document code PET.OP if electronically filing a request for reconsideration of this PTA calculation. The patentee must also include the information required by 37 CFR 1.705(b)(2), and the fee required by 37 CFR 1.18(e). If patentee does not file a timely request for reconsideration of this PTA calculation, including the information required by 37 CFR 1.705(b)(2) and the fee required by 37 CFR 1.18(e), the USPTO will issue a certificate of correction reflecting the PTA determination noted above.

Patentee should be aware that in order to preserve the right of review of the USPTO's PTA determination in the United States District Court for the District of Columbia, patentee must ensure that the steps required under 35 U.S.C. § 154 (b)(4) are taken in a timely manner. Nothing in the request for recalculation should be construed as providing an alternative time frame for commencing a civil action under 35 U.S.C. § 154(b)(4).

UNITED STATES PATENT AND TRADEMARK OFFICE

Commissioner for Patents
United States Patent and Trademark Office
P.O. Box 1450
Alexandria, VA 22313-1450
www.uspto.gov

DAVID W. HIGHET, VP AND CHIEF IP COUNSEL
BECTON, DICKINSON AND COMPANY
1 BECTON DRIVE, MC 110
FRANKLIN LAKES NJ 07417-1880

COPY MAILED

SEP 24 2007

OFFICE OF PETITIONS

In re Application of :
Jeffry J. Sniegowski, et al. :
Application No. 10/791,396 : DECISION ON PETITION
Filed: March 2, 2004 :
Attorney Docket No. P-7239 :

This is a decision on the petition filed in the above-identified application.

The petition is **DISMISSED**.

The rules and statutory provisions governing the operations of the U.S. Patent and Trademark Office require payment of a fee on filing each petition to revive an abandoned application for patent based on unintentional delay or to accept an unintentionally delayed payment of a fee for issuing a patent. In this instance, the fee required by law is **$1,500**. If applicant can qualify as a "small entity" and does so prior to or together with the payment of the fee, the fee will be one-half of the amount indicated. See 37 CFR 1.27.

The petition in the above-identified application was not accompanied by payment of the required fee. No consideration on the merits can be given that petition until the required fee is received.

Further correspondence with respect to this matter should be addressed as follows:

By mail: Mail Stop PETITIONS
Commissioner for Patents
Post Office Box 1450
Alexandria, VA 22313-1450

By hand: Customer Service Window
Mail Stop Petitions
Randolph Building
401 Dulany Street
Alexandria, VA 22314

By fax: (571) 273-8300
ATTN: Office of Petitions

Any questions concerning this matter may be directed to the undersigned at (571) 272-1642.

April M. Wise
Petitions Examiner
Office of Petitions

UNITED STATES PATENT AND TRADEMARK OFFICE

Commissioner for Patents
United States Patent and Trademark Office
P.O. Box 1450
Alexandria, VA 22313-1450
www.uspto.gov

DAVID W. HIGHET, VP AND CHIEF IP COUNSEL
BECTON, DICKINSON AND COMPANY
1 BECTON DRIVE, MC 110
FRANKLIN LAKES, NJ 07417-1880

COPY MAILED

MAR 17 2008

OFFICE OF PETITIONS

In re Application of :
Jeffry J. Sniegowski, et al. :
Application No. 10/791,396 : DECISION ON PETITION
Filed: March 2, 2004 :
Attorney Docket No. P-7239 :

This is a decision on the renewed petition under the unintentional provisions of 37 CFR 1.137(b), filed October 3, 2007, to revive the above-identified application.

The petition is **GRANTED**.

The application became abandoned for failure to reply in a timely manner to the Restriction Requirement, mailed February 28, 2006, which set a shortened statutory period for reply of one (1) month or thirty (30) days (whichever is later). No extensions of time under the provisions of 37 CFR 1.136(a) were obtained. Accordingly, the application became abandoned on March 29, 2006.

The petition satisfies the requirements of 37 CFR 1.137(b) in that petitioner has supplied (1) the reply in the form of an election, (2) the petition fee of $1540, and (3) a proper statement of unintentional delay.

Telephone inquiries concerning this decision should be directed to undersigned at (571) 272-1642.

This application is being referred to Technology Center AU 3761 for appropriate action by the Examiner in the normal course of business on the reply received March 7, 2007.

April M. Wise
Petitions Examiner
Office of Petitions

UNITED STATES PATENT AND TRADEMARK OFFICE

Commissioner for Patents
United States Patent and Trademark Office
P.O. Box 1450
Alexandria, VA 22313-1450
www.uspto.gov

Date : October 22, 2007

Patent No. : 7254692 B1
Application No : 10/791417
Inventor(s) : Teoh et al.
Issued : Aug. 7, 2007
Title : **TESTING FOR OPERATING LIFE OF A MEMORY DEVICE WITH ADDRESS CYCLING USING A GRAY CODE SEQUENCE**
Docket No. :

Re: Request for Certificate of Correction

Consideration has been given your request for the issuance of a certificate of correction for the above-identified patent under the provisions of 37 CFR 1.322 and/or 1.323.

Assignees' names and addresses (assignment data) printed in a patent are based *solely* on information supplied in the appropriate space for identifying the assignment data, i.e., item 3 of the Fee(s) Transmittal Form PTOL-85B. After payment of the issue fee, correction of assignment data submitted on the PTOL-85B can only be done by Certificate of Correction under 37 CFR 1.323, with a request under 37 CFR 3.81(b).

A request for a patent to be corrected to state the name of the assignee must:

A. state that the assignment was submitted for recordation as set forth in 37 CFR 3.11 before issuance of the patent;
B. include a request for a certificate of correction under 37 CFR 1.323 along with the fee set forth in 37 CFR 1.20(a); and
C. include the processing fee set forth in 37 CFR 1.17(i).

If the request is granted, Certificates of Correction Branch will be notified that a Certificate of Correction may be issued.

See Manual of Patent Examining Procedure, Section 1481.01 (Rev. 3) (Oct. 2005).

Applicant has not included items A and or C above, accordingly, the request for Certificate of Correction to add or change the assignee data is denied.

Any request under 37 CFR 3.81(b) should be directed to the following address or facsimile number:

By mail:	Mail Stop PETITIONS Commissioner for Patents Post Office Box 1450 Alexandria, VA 22313-1450
By hand:	Customer Service Window Mail Stop Petitions Randolph Building 401 Dulany Street Alexandria, VA 22314
By fax:	571-273-8300 ATTN: Office of Petitions

If a fee (currently $100) was previously submitted for consideration of a Request for Certificate of Correction, under CFR 1.323, to correct assignment data, no additional fee is required.

Elisha Evans
For Cecelia Newman
Decisions & Certificates
of Correction Branch
(703) 308-9390 ext. 110

LAW OFFICE OF MONICA H CHOI
P O BOX 3424
DUBLIN OH 43016-0204

CBN/eme

UNITED STATES PATENT AND TRADEMARK OFFICE

Commissioner for Patents
United States Patent and Trademark Office
P.O. Box 1450
Alexandria, VA 22313-1450
www.uspto.gov

COPY MAILED

JUN 19 2007

OFFICE OF PETITIONS

HOFFMANN & BARON, LLP
6900 JERICHO TURNPIKE
SYOSSET, NY 11791

In re Application of :
Ju, et al. :
Application No. 10/791,423 : DECISION ON PETITION
Filed: March 2, 2004 :
Attorney Docket No. 673-18 :

This is a decision on the petition under 37 CFR 1.182, filed April 13, 2007, to change the order of the names of the inventors.

The petition is **GRANTED**.

Office records have been corrected to reflect the change in the order of the named inventors. A corrected Filing Receipt, which sets forth the desired order of the named inventors, accompanies this decision on petition.

As authorized, the $400 fee for the petition under 37 CFR 1.182 has been assessed to petitioner's deposit account.

This application is being referred to Technology Center AU 3635 for further prosecution.

Telephone inquiries regarding this decision should be directed to the undersigned at (571) 272-

Sherry D. Brinkley
Petitions Examiner
Office of Petitions

ATTACHMENT: Corrected Filing Receipt

UNITED STATES PATENT AND TRADEMARK OFFICE

UNITED STATES DEPARTMENT OF COMMERCE
United States Patent and Trademark Office
Address: COMMISSIONER FOR PATENTS
P.O. Box 1450
Alexandria, Virginia 22313-1450
www.uspto.gov

APPL NO.	FILING OR 371(c) DATE	ART UNIT	FIL FEE REC'D	ATTY.DOCKET NO	TOT CLMS	IND CLMS
10/791,423	03/02/2004	3635	385	673-18	3	1

CONFIRMATION NO. 3773

CORRECTED FILING RECEIPT

23869
HOFFMANN & BARON, LLP
6900 JERICHO TURNPIKE
SYOSSET, NY 11791

OC000000024415431

Date Mailed: 06/19/2007

Receipt is acknowledged of this regular Patent Application. It will be considered in its order and you will be notified as to the results of the examination. Be sure to provide the U.S. APPLICATION NUMBER, FILING DATE, NAME OF APPLICANT, and TITLE OF INVENTION when inquiring about this application. Fees transmitted by check or draft are subject to collection. Please verify the accuracy of the data presented on this receipt. **If an error is noted on this Filing Receipt, please mail to the Commissioner for Patents P.O. Box 1450 Alexandria Va 22313-1450. Please provide a copy of this Filing Receipt with the changes noted thereon. If you received a "Notice to File Missing Parts" for this application, please submit any corrections to this Filing Receipt with your reply to the Notice. When the USPTO processes the reply to the Notice, the USPTO will generate another Filing Receipt incorporating the requested corrections (if appropriate).**

Applicant(s)

Sung Won Yoon, Seoul, KOREA, REPUBLIC OF;
Young Kyu Ju, Seoul, KOREA, REPUBLIC OF;
Dae Kon Kim, Seoul, KOREA, REPUBLIC OF;

Assignment For Published Patent Application

Seoul National University of Technology

Power of Attorney:

Charles Hoffmann--24102
Thomas Kammer--28226
Irving Feit--28601
Ronald Baron--29281
Gordon Belcher--33156
R. Schroeder--34720
Kevin McDermott--35946
Glenn Henneberger--36074
Roderick Turner--38639
Ludomir Budzyn--40540

Domestic Priority data as claimed by applicant

Foreign Applications

REPUBLIC OF KOREA 2003-70402 09/10/2003

If Required, Foreign Filing License Granted: 05/20/2004

The country code and number of your priority application, to be used for filing abroad under the Paris Convention, is US10/791,423

Projected Publication Date: Not Applicable

Non-Publication Request: No

Early Publication Request: No

**** SMALL ENTITY ****

Title

VIBRATION CONTROL APPARATUS USING WATER TANK LOCATED AT TOP FLOOR OF A TALL BUILDING

Preliminary Class

052

PROTECTING YOUR INVENTION OUTSIDE THE UNITED STATES

Since the rights granted by a U.S. patent extend only throughout the territory of the United States and have no effect in a foreign country, an inventor who wishes patent protection in another country must apply for a patent in a specific country or in regional patent offices. Applicants may wish to consider the filing of an international application under the Patent Cooperation Treaty (PCT). An international (PCT) application generally has the same effect as a regular national patent application in each PCT-member country. The PCT process **simplifies** the filing of patent applications on the same invention in member countries, but **does not result** in a grant of "an international patent" and does not eliminate the need of applicants to file additional documents and fees in countries where patent protection is desired.

Almost every country has its own patent law, and a person desiring a patent in a particular country must make an application for patent in that country in accordance with its particular laws. Since the laws of many countries differ in various respects from the patent law of the United States, applicants are advised to seek guidance from specific foreign countries to ensure that patent rights are not lost prematurely.

Applicants also are advised that in the case of inventions made in the United States, the Director of the USPTO must issue a license before applicants can apply for a patent in a foreign country. The filing of a U.S. patent application serves as a request for a foreign filing license. The application's filing receipt contains further information and guidance as to the status of applicant's license for foreign filing.

Applicants may wish to consult the USPTO booklet, "General Information Concerning Patents" (specifically, the section entitled "Treaties and Foreign Patents") for more information on timeframes and deadlines for filing foreign patent applications. The guide is available either by contacting the USPTO Contact Center at 800-786-9199, or it can be viewed on the USPTO website at http://www.uspto.gov/web/offices/pac/doc/general/index.html.

For information on preventing theft of your intellectual property (patents, trademarks and copyrights), you may wish to consult the U.S. Government website, http://www.stopfakes.gov. Part of a Department of Commerce initiative, this website includes self-help "toolkits" giving innovators guidance on how to protect intellectual property in specific countries such as China, Korea and Mexico. For questions regarding patent enforcement issues, applicants may call the U.S. Government hotline at 1-866-999-HALT (1-866-999-4158).

LICENSE FOR FOREIGN FILING UNDER
Title 35, United States Code, Section 184
Title 37, Code of Federal Regulations, 5.11 & 5.15

GRANTED

The applicant has been granted a license under 35 U.S.C. 184, if the phrase "IF REQUIRED, FOREIGN FILING LICENSE GRANTED" followed by a date appears on this form. Such licenses are issued in all applications where the conditions for issuance of a license have been met, regardless of whether or not a license may be required as set forth in 37 CFR 5.15. The scope and limitations of this license are set forth in 37 CFR 5.15(a) unless an earlier license has been issued under 37 CFR 5.15(b). The license is subject to revocation upon written notification. The date indicated is the effective date of the license, unless an earlier license of similar scope has been granted under 37 CFR 5.13 or 5.14.

This license is to be retained by the licensee and may be used at any time on or after the effective date thereof unless it is revoked. This license is automatically transferred to any related applications(s) filed under 37 CFR 1.53(d). This license is not retroactive.

The grant of a license does not in any way lessen the responsibility of a licensee for the security of the subject matter as imposed by any Government contract or the provisions of existing laws relating to espionage and the national security or the export of technical data. Licensees should apprise themselves of current regulations especially with respect to certain countries, of other agencies, particularly the Office of Defense Trade Controls, Department of State (with respect to Arms, Munitions and Implements of War (22 CFR 121-128)); the Bureau of Industry and Security, Department of Commerce (15 CFR parts 730-774); the Office of Foreign Assets Control, Department of Treasury (31 CFR Parts 500+) and the Department of Energy.

NOT GRANTED

No license under 35 U.S.C. 184 has been granted at this time, if the phrase "IF REQUIRED, FOREIGN FILING LICENSE GRANTED" DOES NOT appear on this form. Applicant may still petition for a license under 37 CFR 5.12, if a license is desired before the expiration of 6 months from the filing date of the application. If 6 months has lapsed from the filing date of this application and the licensee has not received any indication of a secrecy order under 35 U.S.C. 181, the licensee may foreign file the application pursuant to 37 CFR 5.15(b).

UNITED STATES PATENT AND TRADEMARK OFFICE

Commissioner for Patents
United States Patent and Trademark Office
P.O. Box 1450
Alexandria, VA 22313-1450
www.uspto.gov

ROGER PITT
KIRKPATRICK & LOCKHART PRESTON GATES ELLIS LLP
599 LEXINGTON AVENUE, 33RD FLOOR
NEW YORK NY 10022-6030

COPY MAILED

SEP 25 2007

OFFICE OF PETITIONS

In re Application of :
SCHLOSSMAN, et al. :
Application No. 10/791,424 :
Filed: March 1, 2004 :
Attorney Docket No. **DS420** :

DECISION ON PETITION
TO WITHDRAW
FROM RECORD

This is a decision on the Request to Withdraw as attorney or agent of record under 37 C.F.R. § 1.36(b), filed April 27, 2006.

The request is **NOT APPROVED** as moot.

A review of the file record indicates that the power of attorney to **KIRKPATRICK & LOCKHART PRESTON GATES ELLIS LLP** has been revoked by the assignee of the patent application on April 26, 2007 and re-submitted September 18, 2007. Accordingly, the request to withdraw under 37 C.F.R. § 1.36(b) is moot.

All future communications from the Office will continue to be directed to the below-listed address until otherwise notified by applicant.

Telephone inquires concerning this decision should be directed to the undersigned at 571-272-7253.

Monica A. Graves
Petitions Examiner
Office of Petitions

cc: **BROWN, RUDNICK, BERLACK & ISRAELS, LLP.**
BOX IP, 18TH FLOOR
ONE FINANCIAL CENTER
BOSTON, MA 02111

UNITED STATES PATENT AND TRADEMARK OFFICE

Commissioner for Patents
United States Patent and Trademark Office
P.O. Box 1450
Alexandria, VA 22313-1450
www.uspto.gov

BULLIVANT HOUSER BAILEY PC
1415 L STREET
SUITE 1000
SACRAMENTO CA 95814

COPY MAILED

OCT 27 2008

OFFICE OF PETITIONS

In re Application of	:	
Magnuson et al.	:	
Application No. 10/791,430	:	DECISION ON PETITION
Filed: March 1, 2004	:	
Attorney Docket No. 30361/00001	:	

This is a decision on the petition under the unintentional provisions of 37 CFR 1.137(b), filed September 18, 2008, to revive the above-identified application.

The petition is **GRANTED**.

The application became abandoned for failure to timely reply within the meaning of 37 CFR 1.113 to the final Office action mailed November 29, 2007, which set a shortened statutory period for reply of three (3) months. No extensions of time under the provisions of 37 CFR 1.136(a) were timely obtained. Accordingly, the application became abandoned on March 1, 2008. A Notice of Abandonment was mailed July 18, 2008.

The petition satisfies the requirements of 37 CFR 1.137(b) in that petitioner has supplied (1) the reply in the form of a Notice of Appeal and fee of $255.00; (2) the petition fee of $770.00; and (3) a proper statement of unintentional delay.

The two-month period for filing an appeal brief under 37 CFR 41.37 (accompanied by the fee required by 37 CFR 41.20(b)(2)), runs from the date of this decision.

Additionally, an extension of time under 37 CFR 1.136 must be filed prior to the expiration of the maximum extendable period for reply. *See* In re Application of S., 8 USPQ2d 1630, 1631 (Comm'r Pats. 1988). Since the $525.00, three- month extension of time fee submitted with the petition on September 18, 2008 was subsequent to the maximum extendable period for reply, this fee is unnecessary and will be refunded to petitioner's deposit account in due course.

Telephone inquiries concerning this decision should be directed to Joan Olszewski at (571) 272-7751.

This application is being referred to Technology Center AU 3724 to await the filing of an appeal brief or for such other appropriate reply as may be submitted to continue prosecution of the application.

/Liana Walsh/
Liana Walsh
Petitions Examiner
Office of Petitions

UNITED STATES PATENT AND TRADEMARK OFFICE

Commissioner for Patents
United States Patent and Trademark Office
P.O. Box 1450
Alexandria, VA 22313-1450
www.uspto.gov

JJGJr: 09-05

Paper No: __

U.P. PETER ENG
WILSON SONSINI GOODRICH AND ROSATI
650 PAGE MILL ROAD
PALO ALTO CA 94304

COPY MAILED

OCT 0 7 2005

OFFICE OF PETITIONS

In re Application of
Eisen :
Application No. 10/791,439 : ON PETITION
Filed: 2 March, 2004 :
Attorney Docket No.: 31718-701.201 :

This is a decision on the petition filed (with fee) on 25 August, 2005, and then twice in altered forms on 30 August, 2005, and considered under 37 C.F.R. §1.183 to expedite and to expunge from the file under 37 C.F.R. §1.59).certain documents improvidently submitted by Applicant and original Counsel.

The petition under:

- under 37 C.F.R. §1.183 for expedited consideration is **GRANTED**; and

- 37 C.F.R. §1.59 is **GRANTED** to the extent that the improvidently submitted Chart containing what Petitioner describes as "personal information" hereby is directed to be expunged–i.e., made unavailable and inaccessible to unauthorized review and consideration–in a fashion to be determined by the Office; in all other respects the petition is **DISMISSED**.

The instant application was deposited by Applicant through original Counsel on 2 March, 2004, with what was represented as a specification (description, claims, abstract) and an appendix identified in the instant petition as "the Chart."

On 25 August, 2005, Petitioner filed a Revocation/Power of Attorney.

On 30 August, 2005, Petitioner filed the instant petitions seeking a waiver to expunge the originally filed Chart submitted in illustration but containing what Petitioner now describes as "personal information" that erroneously placed in the Chart and substitute an amended Chart containing what Petitioner essentially describes as nonsense data to restore the illustration. Specifically, the Chart originally submitted is alleged to contain partial real names, E-mail addresses and credit card numbers intended to be fictitious examples, and the substituted Chart is averred to contain more-thoroughly fictitious examples containing none of the real data (personal information) previously submitted.

NOTE: **Before the instant petition was filed, the Office posted on its website, www.uspto,.gov at http://www.uspto.gov/web/doc/privact.htm, a caution to applicants and practitioners[1] regarding the inclusion of personal/private information in applications, petitions and other papers.**

Petitioner and Applicant(s) are reminded to review and consider this posting.

Thus, Petitioner wishes to remove/expunge the Chart as originally submitted and replace it with an amended version containing wholly fictitious example data.

---

[1] Specifically, the side-bar special notice at the Office website stated/states:

Protect Yourself Against Identity Theft!

To Our USPTO Customers:

When filing documentation in support of applications or petitions, please take steps to protect all personal information. "Personal information" includes social security, credit card and banking account numbers. **This type of personal data is never required by the USPTO to support a petition or application.**

To protect your privacy, we suggest that you delete such information from any documentation you send the office.

Alternatively, you may request that the submissions be kept out of the public file, if appropriate. (See MPEP Sections 724. 02 to 724.06.)

Please remember that all patent application files are published and made available to the public 18 months from the filing date, unless a non-publication request is made in the application. Additionally, all patented application files will become available to the public upon the grant of the patent.

If you have questions about what information may be published and how to remove the material from documents you plan to submit to the USPTO, please call the Inventors Assistance Center at **1-800-786-9199** or **571-272-1000 TTY: 571-272-9950.**

CONCLUSION

Accordingly, the request under:

- 37 C.F.R. §1.183 for expedited consideration of the petition is **granted**; and

- 37 C.F.R. §1.59 for expungement of the Chart containing "personal information" is **granted** to the limited extent that is directed that the Chart as deposited on 2 March, 2004, is to be expunged–i.e., made unavailable and inaccessible to unauthorized review and consideration–in a fashion to be determined by the Office; and

in all other respects the petition is **dismissed**.

Petitioner is reminded that the entry of the amended Chart submitted is the exclusive province of the Examiner to be considered on submission of an amendment by Petitioner expressly for that purpose.

The instant application is being released to OIPE for further processing before being forwarded for substantive examination.

Telephone inquiries regarding this decision should be directed to the undersigned at (703) 305-9199.

John J. Gillon, Jr.
Senior Attorney
Office of Petitions

UNITED STATES PATENT AND TRADEMARK OFFICE

Commissioner for Patents
United States Patent and Trademark Office
P.O. Box 1450
Alexandria, VA 22313-1450
www.uspto.gov

TOWNSEND AND TOWNSEND AND CREW, LLP
TWO EMBARCADERO CENTER
EIGHTH FLOOR
SAN FRANCISCO, CA 94111-3834

MAILED

MAY 1 2 2005

Technology Center 2100

In re Application of: FURUKAWA, et al.
Application No. 10/791,452
Filed: March 1, 2004
For: STORAGE SUBSYSTEM, STORAGE SYSTEM, AND COMMUNICATION CONTROL METHOD

DECISION ON PETITION TO MAKE SPECIAL (ACCELERATED EXAMINATION) UNDER M.P.E.P. §708.02 (VIII)

This is a response to the petition filed February 17, 2005, under 37 C.F.R. §1.102(d) and M.P.E.P. §708.02 (VIII): Accelerated Examination, to make the above-identified application special.

The Petition is **DISMISSED**.

M.P.E.P. §708.02, Section VIII, which sets out the prerequisites for a grantable petition for Accelerated Examination under 37 C.F.R. §1.102(d) states in relevant part:

A new application (one which has not received any examination by the examiner) may be granted special status provided that applicant (and this term includes applicant's attorney or agent) complies with each of the following items:

(a) Submits a petition to make special accompanied by the fee set forth in **37 CFR 1.17(h)**;

(b) Presents all claims directed to a single invention, or if the Office determines that all the claims presented are not obviously directed to a single invention, will make an election without traverse as a prerequisite to the grant of special status;

(c) Submits a statement(s) that a pre-examination search was made, listing the field of search by class and subclass, publication, Chemical Abstracts, foreign patents, etc. The pre-examination search must be directed to the invention as claimed in the application for which special status is requested. A search made by a foreign patent office satisfies this requirement;

(d) Submits one copy each of the references deemed most closely related to the subject matter encompassed by the claims if said references are not already of record; and

(e) Submits a detailed discussion of the references, which discussion points out, with the particularity required by 37 CFR 1.111 (b) and (c), how the claimed subject matter is patentable over the references.

The petition filed February 17, 2005 fails to adequately meet requirement (e) of the criteria set forth above.

With respect to requirement (e), a complete detailed discussion of the (aforementioned most closely related) references has not been provided with the necessary specificity required under 37 CFR 1.111 (b) and (c). Specifically, Petitioner should ensure that the above discussion is directed to how the language of **each of the independent claims** are specifically distinguishable and patentable from the references provided in requirement (d) above. It is noted that the independent claims 19-20 differ in scope from the discussion presented in the petition with respect to independent claims 1, 9, and 15, specifically regarding the recited, or similarly recited, steps of measuring traffic of a communication packet judged not to be the packet with the format in the first filter, and displaying the information alerted in case that a communication failure is generated.

Petition to Make Special **DISMISSED**.

Petitioner is given one opportunity to perfect the petition. Any request for reconsideration must be filed within TWO MONTHS of the mail date of this decision. Extensions of time under 37 CFR 1.136(a) are permitted by a declaration or statement providing the information as outlined above.

Until the renewed petition is submitted, the application will be returned to the examiner's docket to await treatment on the merits in the normal order of examination.

Brian L. Johnson
Special Program Examiner
Technology Center 2100
Computer Architecture, Software and Information Security
571-272-3595

4/29/05

SDL: 04/22/05

UNITED STATES PATENT AND TRADEMARK OFFICE

Commissioner for Patents
United States Patent and Trademark Office
P.O. Box 1450
Alexandria, VA 22313-1450
www.uspto.gov

TOWNSEND AND TOWNSEND AND CREW, LLP
TWO EMBARCADERO CENTER
EIGHTH FLOOR
SAN FRANCISCO, CA 94111-3834

MAILED

SEP 05 2006

Technology Center 2100

In re Application of: Furukawa, et al.
Application No. 10/791,452
Filed: March 1, 2004
For: STORAGE SUBSYSTEM, STORAGE SYSTEM, AND COMMUNICATION CONTROL METHOD

DECISION ON PETITION
TO MAKE SPECIAL
(ACCELERATED EXAMINATION)
UNDER M.P.E.P. §708.02 (VIII)

This is a response to the renewed petition filed February 7, 2006, under 37 C.F.R. §102(d) and M.P.E.P. § 708.02(VIII): Accelerated Examination, to make the above-identified application special. The original petition was filed on February 17, 2005 and dismissed in a decision mailed on May 12, 2005.

The Petition is **DENIED**.

M.P.E.P. § 708.02, Section VIII which sets out the prerequisites for a grantable petition for Accelerated Examination under 37 C.F.R. § 102(d) states in relevant part:

A new application (one which has not received any examination by the examiner) may be granted special status provided that applicant (and this term includes applicant's attorney or agent) complies with each of the following items:

(a) Submits a petition to make special accompanied by the fee set forth in 37 CFR 1.17(h);

(b) Presents all claims directed to a single invention, or if the Office determines that all the claims presented are not obviously directed to a single invention, will make an election without traverse as a prerequisite to the grant of special status;

(c) Submits a statement(s) that a pre-examination search was made, listing the field of search by class and subclass, publication, Chemical Abstracts, foreign patents, etc. The pre-examination search must be directed to the invention as claimed in the application for which special status is requested. A search made by a foreign patent office satisfies this requirement;

(d) Submits one copy each of the references deemed most closely related to the subject matter encompassed by the claims if said references are not already of record; and

(e) Submits a detailed discussion of the references, which discussion points out, with the particularity required by 37 CFR 1.111 (b) and (c), how the claimed subject matter is patentable over the references.

The previous decision, mailed on May 12, 2005 set a two-month period for submission of any request for reconsideration (from the date of mailing of that decision). Any potential period or extension of time, under 37 CFR 1.136(a), have since expired.

The petition filed February 7, 2006 in the instant application is beyond the two-months period for response set forth in the previous decision. No request or petition for extension of time accompanied the renewed petition. The renewed petition therefore is considered to be untimely.

Accordingly, the petition to Make Special is **DENIED**. The application is being returned to the Examiner's docket to await examination in its proper turn based on its effective filing date.

Any inquiries related to this decision may be directed to Specials Programs Examiner Brian Johnson at 571-272-3595.

Brian L. Johnson
Special Program Examiner
Technology Center 2100
Computer Architecture, Software and Information Security

UNITED STATES PATENT AND TRADEMARK OFFICE

COMMISSIONER FOR PATENTS
UNITED STATES PATENT AND TRADEMARK OFFICE
P.O. BOX 1450
ALEXANDRIA, VA 22313-1450
www.uspto.gov

MATTINGLY, STANGER, MALUR & BRUNDIDGE, P.C.
1800 DIAGONAL ROAD
SUITE 370
ALEXANDRIA VA 22314

MAILED

NOV 2 8 2005

Technology Center 2100

In re Application of: MAEDA, et al.
Application No. 10/791,479
Filed: March 2, 2004
For: DISK ARRAY DEVICE AND METHOD FOR CONTROLLING DISK ARRAY DEVICE

DECISION ON PETITION
TO MAKE SPECIAL
(ACCELERATED EXAMINATION)
UNDER MPEP §708.02 (VIII)

This is a response to the petition filed 29 August 2005, under 37 CFR §1.102(d) and MPEP §708.02 (VIII): Accelerated Examination, to make the above-identified application special.

The Petition is **GRANTED**.

MPEP §708.02, Section VIII which sets out the prerequisites for a grantable petition for Accelerated Examination under 37 C.F.R. §1.102(d) states in relevant part:

A new application (one which has not received any examination by the examiner) may be granted special status provided that applicant (and this term includes applicant's attorney or agent) complies with each of the following items:

(a) Submits a petition to make special accompanied by the fee set forth in **37 CFR 1.17(h)**;

(b) Presents all claims directed to a single invention, or if the Office determines that all the claims presented are not obviously directed to a single invention, will make an election without traverse as a prerequisite to the grant of special status;

(c) Submits a statement(s) that a pre-examination search was made, listing the field of search by class and subclass, publication, Chemical Abstracts, foreign patents, etc. The pre-examination search must be directed to the invention as claimed in the application for which special status is requested. A search made by a foreign patent office satisfies this requirement;

(d) Submits one copy each of the references deemed most closely related to the subject matter encompassed by the claims if said references are not already of record; and

(e) Submits a detailed discussion of the references, which discussion points out, with the particularity required by 37 CFR 1.111 (b) and (c), how the claimed subject matter is patentable over the references.

Applicant's submission meets all the criteria set out above. Accordingly, the petition is **GRANTED**. However, it is suggested that if the identical statement is being made to distinguish each reference from an independent claim, as in the instant petition, then the statement should simply be made once in the petition. (E.g., "Regarding independent claim 1, none of the references disclose . . . .")

The application file is being forwarded to the Examiner of Record for accelerated examination according to the procedures set forth in MPEP § 708.02, Section VIII.

Pinchus M. Laufer
Special Program Examiner
Technology Center 2100
Computer Architecture, Software and Information Security
571-272-3599

ds

UNITED STATES PATENT AND TRADEMARK OFFICE

UNITED STATES DEPARTMENT OF COMMERCE
United States Patent and Trademark Office
Address: COMMISSIONER FOR PATENTS
P.O. Box 1450
Alexandria, Virginia 22313-1450
www.uspto.gov

LUCAS & MERCANTI, LLP
475 PARK AVENUE SOUTH
15TH FLOOR
NEW YORK, NY 10016

Mail Date: 04/20/2010

Applicant	: Ken Ohmura	: DECISION ON REQUEST FOR
Patent Number	: 7625686	: RECALCULATION of PATENT
Issue Date	: 12/01/2009	: TERM ADJUSTMENT IN VIEW
Appliction No	: 10/791,480	: OF WYETH AND NOTICE OF INTENT TO
Filed	: 03/02/2004	: ISSUE CERTIFICATE OF CORRECTION
		:

The Request for Recalculation is **GRANTED** to the extent indicated.

The patent term adjustment has been determined to be **863** days. The USPTO will *sua sponte* issue a certificate of correction reflecting the amount of PTA days determined by the recalculation.

Prior to the issuance of the certificate of correction, the USPTO will afford patentee an opportunity to be heard and request reconsideration. Accordingly, patentee has **one month or thirty (30) days**, whichever is longer, to file a request for reconsideration of this patent term adjustment calculation. See 35 U.S.C. 154(b)(3)(B)(ii) and 37 CFR 1.322(a)(4). No extensions of time will be granted under 37 CFR 1.136.

Patentee should use document code PET.OP if electronically filing a request for reconsideration of this patent term adjustment calculation. The patentee must also include the information required by 37 CFR 1.705(b)(2) and the fee required by 37 CFR 1.18(e). If patentee does not file a timely request for reconsideration of this patent term adjustment calculation including the information required by 37 CFR 1.705(b)(2) and the fee required by 37 CFR 1.18(e), the USPTO will issue a certificate of correction reflecting the PTA determination noted above.

Patentee should be aware that in order to preserve the right to review in the United States District Court for the District of Columbia of the USPTO patent term adjustment determination, patentee must ensure that he or she also take the steps required under 35 U.S.C. 154(b)(4)(A) in a timely manner. Nothing in the request for recalculation should be construed as providing an alternative time frame for commencing a civil action under 35 U.S.C. 154(b)(4)(A).

Any questions concerning this decision should be directed to the Office of Patent Legal Administration at 571-272-7702.

UNITED STATES PATENT AND TRADEMARK OFFICE

COMMISSIONER FOR PATENTS
UNITED STATES PATENT AND TRADEMARK OFFICE
P.O. BOX 1450
ALEXANDRIA, VA 22313-1450
www.uspto.gov

Gifford, Krass, Groh, Sprinkle,
Anderson & Citkowski, PC
280 N. Old Woodard Avenue
Suite 400
Birmingham, MI 48009

COPY MAILED

AUG 29 2005

OFFICE OF PETITIONS

In re Application of :
Robert W. M. Smith, et al. :
Application No. 10/791,497 : DECISION DISMISSING
Filed: March 2, 2004 : PETITION AS MOOT
Attorney Docket No. PST-10703/36 :

This is a decision on the petition filed June 8, 2004, requesting that the above-identified application retain its filing date of March 2, 2004, with an indication that Figures 8 and 9 were present on filing.

The application was deposited on March 2, 2004. However, the Office of Initial Patent Examination mailed a "Notice of Omitted Items in a Nonprovisional Application" (Notice) on March 3, 2004 stating that the application was deposited without Figures 8 and 9.

In reply to the Notice, applicant filed the instant petition stating that the application is a continuation application of Application No. 10/410,492, and that the specification in the present application incorporated by reference the parent application mentioned above, which parent application includes the missing drawing figures.

The mailing of a "Notice of Omitted Items" permits the applicant to either: (1) promptly establish prior receipt in the PTO of the drawing(s) at issue (generally by way of a date-stamped postcard receipt (MPEP 503)), or (2) promptly submit the omitted drawing(s) in a nonprovisional application and accept the date of such submission as the application filing date. An applicant asserting that the missing drawings were in fact deposited in the PTO with the application papers must file a petition (and the appropriate petition fee) with evidence of such deposit. An applicant desiring to submit the omitted drawings in a nonprovisional application and accept the date of such submission as the application filing date must file any omitted drawing(s) with an oath or declaration in compliance with 37 CFR 1.63 and 1.64 referring to such drawing(s) and a petition under 37 CFR 1.182 (with the petition fee under 37 CFR 1.17(h)) requesting the later filing date within two months of the date of the "Notice of Omitted Items" (37 CFR 1.181(f)).

Clearly, Figures 8 and 9 were intended to be a part of the application, but these figures were not present in the application file on March 2, 2004, the date of deposit of the application. Therefore, the application cannot be accorded that date as the filing date with Figures 8 and 9 as part of the original disclosure. Figures 8 and 9 were simply not filed in the USPTO on that date. Accordingly, petitioner cannot retain the March 2, 2004 filing date with an indication that Figures 8 and 9 were present on filing.

MPEP 201.06(c) in pertinent part states:

> "If a continuation or divisional application as originally filed is entitled to a filing date despite the omission of a portion of the prior application(s), applicant will be permitted to add the omitted material by way of an amendment provided a statement was included in the application as originally filed that incorporates by reference the prior application(s). If the application as originally filed includes a proper incorporation by reference of the prior application(s), an omitted specification page(s) and/or drawings figure(s) identified in a "Notice of Omitted Item(s)" may be added by amendment provided the omitted item(s) contains only subject matter in common with such prior application(s). In such case, applicant need **not** respond to the "Notice of Omitted Item(s)." Applicant should submit the amendment adding the omitted material prior to the first Office action to avoid delays in the prosecution of the application. See MPEP § 601.01(d) and § 601.01(g).

In accordance with MPEP 201.06(c), applicant may seek to amend the application to include the omitted drawing figures. However, no petition under 37 CFR 1.182 is necessary for that purpose. The primary examiner without petition may enter new drawings so long as those drawings contain now new matter. See MPEP § 608.02(a). However, that is an issue to be raised before the examiner during the course of the examination of this application and as such will not be further considered as a filing date matter.

In view of the above, the petition is **DISMISSED AS MOOT**.

Accordingly, petitioner may request a refund of the $130 petition fee by writing to the Office of Finance, Refund Section. A copy of this decision should accompany such a request.

This application file is being referred to the Office of Initial Patent Examination for further **processing with a filing date of March 2, 2004, including an indication in Office records that Figures 1 –7 and 10 – 15 were present on filing.**

Telephone inquiries concerning this matter may be directed to the undersigned at (571) 272-3223.

Marianne E. Jenkins
Petitions Examiner
Office of Petitions

UNITED STATES PATENT AND TRADEMARK OFFICE

Commissioner for Patents
United States Patent and Trademark Office
P.O. Box 1450
Alexandria, VA 22313-1450
www.uspto.gov

KENYON & KENYON LLP
ONE BROADWAY
NEW YORK, NY 100

COPY MAILED
DEC 15 2008

In re Application of :
VORBACK, et al. :
Application No. 10/791,501 : DECISION GRANTING PETITION
Filed: March 1, 2004 : UNDER 37 CFR 1.313(c)(2)
Attorney Docket No. **2885/85** :

This is a decision on the petition under 37 CFR 1.313(c)(2), filed December 11, 2008, to withdraw the above-identified application from issue after payment of the issue fee.

The petition is **GRANTED**.

The above-identified application is withdrawn from issue for consideration of a submission under 37 CFR 1.114 (request for continued examination). *See* 37 CFR 1.313(c)(2).

Petitioner is advised that the issue fee paid on October 24, 2008 cannot be refunded. If, however, this application is again allowed, petitioner may request that it be applied towards the issue fee required by the new Notice of Allowance.[1]

There is no indication that the person signing the petition was ever given a power of attorney or authorization of agent to prosecute the above-identified application. However, the signature of Aaron Grunberger appearing on the petition shall constitute a representation to the United States Patent and Trademark Office that he is authorized to represent the particular party on whose behalf he acts in accordance with 37 CFR 1.34(a).

Telephone inquiries should be directed to the undersigned at (571) 272-7253.

This application is being referred to Technology Center AU 2116 for processing of the request for continued examination under 37 CFR 1.114 and for consideration of the concurrently filed information disclosure statement.

/Monica A. Graves/
Petitions Examiner
Office of Petitions

---

[1] *The request to apply the issue fee to the new Notice may be satisfied by completing and returning the new Part B – Fee(s) Transmittal Form (along with any balance due at the time of submission). Petitioner is advised that the Issue Fee Transmittal Form* ***must*** *be completed and timely submitted to avoid abandonment of the application.*

UNITED STATES PATENT AND TRADEMARK OFFICE

UNITED STATES DEPARTMENT OF COMMERCE
United States Patent and Trademark Office
Address: COMMISSIONER FOR PATENTS
P.O. Box 1450
Alexandria, Virginia 22313-1450
www.uspto.gov

APPLICATION NO.	FILING DATE	FIRST NAMED INVENTOR	ATTORNEY DOCKET NO.	CONFIRMATION NO.
10/791,518	03/01/2004	A. (Tony) Bradley	P06703US01	2747

22885 7590 06/30/2010

MCKEE, VOORHEES & SEASE, P.L.C.
801 GRAND AVENUE
SUITE 3200
DES MOINES, IA 50309-2721

EXAMINER	
ROSEN, ELIZABETH H	

ART UNIT	PAPER NUMBER
3684	

NOTIFICATION DATE	DELIVERY MODE
06/30/2010	ELECTRONIC

Please find below and/or attached an Office communication concerning this application or proceeding.

The time period for reply, if any, is set in the attached communication.

Notice of the Office communication was sent electronically on above-indicated "Notification Date" to the following e-mail address(es):

patatty@ipmvs.com

UNITED STATES PATENT AND TRADEMARK OFFICE

Commissioner for Patents
United States Patent and Trademark Office
P.O. Box 1450
Alexandria, VA 22313-1450
www.uspto.gov

JUN 29 2010

John D. Goodhue
McKee, Voorhees & Sease, PLC
801 Grand Ave., Suite 3200
Des Moines, Iowa 50309

In re Application of	:	
A. (Tony) W. Bradley	:	Treatment of Request
Application No. 10/791518	:	Under 37 CFR 1.48 Petition
Filed: March 1, 2004	:	Under 37 CFR 1.324
For: **TRADING TOOLS FOR ELECTRONIC TRADING**	:	

This is a decision on the request under 37 CFR 1.48, filed June 10, 2008. In view of the fact that the patent has already issued, the request under 37 CFR 1.48 has been treated as a petition to correct inventorship under 37 CFR 1.324

The petition is **GRANTED**.

The patented file is being forwarded to Certificate of Corrections Branch for issuance of a certificate naming only the actual inventor or inventors.

Any questions regarding this letter should be directed to Kambiz Abdi at (571) 272-6702

/Kambiz Abdi/

Kambiz Abdi
Supervisory Patent Examiner Art Unit 3684

UNITED STATES PATENT AND TRADEMARK OFFICE

Commissioner for Patents
United States Patent and Trademark Office
P.O. Box 1450
Alexandria, VA 22313-1450
www.uspto.gov

WORKMAN NYDEGGER
(F/K/A WORKMAN NYDEGGER & SEELEY)
60 EAST SOUTH TEMPLE
1000 EAGLE GATE TOWER
SALT LAKE CITY UT 84111

COPY MAILED

JAN 1 0 2007

OFFICE OF PETITIONS

In re Application of :
Festag et al. :
Application No. 10/791,539 : ON PETITION
Filed: March 1, 2004 :
Attorney Docket No. 16274.37b.1 :

This is a decision on the petition under 37 C.F.R. § 1.137(b), filed August 30, 2006, to revive the above-identified application.

The petition is **GRANTED.**

The petition satisfies the conditions for revival pursuant to the provisions of 37 CFR 1.137(b) in that (1) the reply in the form of a Request for Continued Examination (RCE) and an Amendment; (2) the petition fee; and (3) the required statement of unintentional delay have been received. Accordingly, the response has been accepted as having been unintentionally delayed.

This matter is being referred to Technology Center 2800 for processing of the Request for Continued Examination under 37 CFR 1.114 filed with the instant petition.

Telephone inquiries regarding this decision should be directed to the undersigned at (571) 272-3206.

Liana Walsh
Petitions Examiner
Office of Petitions

UNITED STATES PATENT AND TRADEMARK OFFICE

Commissioner for Patents
United States Patent and Trademark Office
P.O. Box 1450
Alexandria, VA 22313-1450
www.uspto.gov

COATS & BENNETT, PLLC
1400 CRESCENT GREEN, SUITE 300
CARY NC 27518

COPY MAILED

AUG 0 9 2007

OFFICE OF PETITIONS

In re Application of :
Vinay G. Sakhrani et al :
Application No. 10/791,542 : DECISION GRANTING PETITION
Filed: March 2, 2004 : UNDER 37 CFR 1.137(b)
Attorney Docket No. 5764-001 :

This is a decision on the petition under 37 CFR 1.137(b), filed March 14, 2007, to revive the above-identified application.

The petition is **GRANTED**.

The petition satisfies the conditions for revival pursuant to the provisions of 37 CFR 1.137(b) in that (1) the reply in the form of an RCE and an amendment; (2) the petition fee; and (3) the required statement of unintentional delay have been received. Accordingly, the reply to the Final Rejection of July 12, 2006, is accepted as having been unintentionally delayed.

Telephone inquiries concerning this decision should be directed to the undersigned at (571) 272-3208.

This matter is being referred to Technology Center AU 1773.

Karen Creasy
Petitions Examiner
Office of Petitions

UNITED STATES PATENT AND TRADEMARK OFFICE

Commissioner for Patents
United States Patent and Trademark Office
P.O. Box 1450
Alexandria, VA 22313-1450
www.uspto.gov

MAILED

JUL 21 2005

Director's Office
Group 3700

William L. Krayer
Attorney at Law
1771 Helen Drive
Pittsburgh, PA 15216

In re application of
William L. Krayer

Serial Number: 10/791596
Filed: February 03, 2004

DECISION ON PETITION TO MAKE SPECIAL UNDER 37 CFR. 1.102(c)

For: **TURNTABLE WITH GEROTOR**

This is a decision on the petition filed on February 22, 2005, under 37 CFR. 1.102(c) to make special the above identified application because of the age/health of the applicant. Since the requirements of the M.P.E.P Section 708.02 IV have been met, the petition will be GRANTED.

The examiner is directed (1) to make an interference search for possible interfering applications, (2) to promptly examine this application out of turn, and (3) if any interfering application is discovered, to examine such application simultaneously and state in the first official letter of such application that it is being taken out of turn because of a possible interference.

Petitioner is advised that this application will continue to be special, throughout its entire prosecution and pendency, including interference or appeal, if any, only is Petitioner makes a prompt bona-fide effort, in response to each Office action, to place the application in condition for allowance, even if it is necessary to conduct an interview with the Examiner to accomplish this purpose.

Summary: Decision on Petition **GRANTED**.

Richard A. Bertsch
Director
Technology Center 3700
(571) 272-3750

rt: 2/9/05

UNITED STATES PATENT AND TRADEMARK OFFICE

Commissioner for Patents
United States Patent and Trademark Office
P.O. Box 1450
Alexandria, VA 22313-1450
www.uspto.gov

FOLEY HOAG, LLP
PATENT GROUP, WORLD TRADE CENTER WEST
155 SEAPORT BLVD
BOSTON MA 02110

COPY MAILED

AUG 10 2006

OFFICE OF PETITIONS

In re Application of :
Halperin et al. :
Application No. 10/791,622 : DECISION ON PETITION
Filed: March 2, 2004 : TO WITHDRAW
Attorney Docket No. SUW-007.03 : FROM RECORD
:

This is a decision on the Request to Withdraw as attorney or agent of record under 37 C.F.R. § 1.36(b), filed January 27, 2006.

The request is **APPROVED**.

A grantable request to withdraw as attorney/agent of record must be signed by every attorney/agent seeking to withdraw or contain a clear indication that one attorney is signing on behalf of another/others. A request to withdraw will not be approved unless at least 30 (thirty) days would remain between the date of approval and the later of the expiration date of a time to file a response or the expiration date of the maximum time period which can be extended under 37 C.F.R. § 1.136(a).

The request was signed by Scott E. Kamholz on behalf of all attorneys of record who are associated with customer No. 25181.

All attorneys/agents associated with the Customer Number 25181 have been withdrawn.

Applicant is reminded that there is no attorney of record at this time.

All future correspondence will be directed to the first named inventor Henry R. Halperin at the address indicated below.

The request to change the correspondence of record is not acceptable as the requested correspondence address is not that of: (1) the first named signing inventor; or (2) an intervening assignee of the entire interest under 37 C.F.R 3.71. All future communications from the Office will be directed to the first named signing inventor at the first copied address below until otherwise properly notified by the applicant.

Telephone inquiries concerning this decision should be directed to April Wise at 571-272-1642.

Amelia Au
Petitions Examiner
Office of Petitions

cc: Henry T. Halperin
7708 Crossland Road
Pikesville, MD 21208

cc: Bryant Gold
Advanced Bionics Corporation
25129 Rye Canyon Road
Valencia, CA 91355

UNITED STATES PATENT AND TRADEMARK OFFICE

Commissioner for Patents
United States Patent and Trademark Office
P.O. Box 1450
Alexandria, VA 22313-1450
www.uspto.gov

Bryant R. Gold
Laura Haburay Bishop
25129 Rye Canyon Loop
Valencia, CA 91355

COPY MAILED

JUL 0 3 2008

OFFICE OF PETITIONS

In re Application of	:	
Henry R. Halperin, et al.	:	
Application No. 10/791,622	:	DECISION ON PETITION
Filed: March 2, 2004	:	TO WITHDRAW
Attorney Docket No. 9450-19CT	:	FROM RECORD
	:	

This is a decision on the Request to Withdraw as attorney or agent of record under 37 C.F.R. § 1.36(b), filed February 15, 2008.

The request is **NOT APPROVED** because it is moot.

A review of the file record indicates that the power of attorney to Bryant R. Gold and Laura Haburay Bishop has been revoked by the assignee of the patent application on August 15, 2007. Accordingly, the request to withdraw under 37 C.F.R. § 1.36(b) is moot.

All future communications from the Office will continue to be directed to the below-listed address until otherwise notified by applicant.

Telephone inquires concerning this decision should be directed to Terri Williams at 571-272-2991.

Terri Williams
Petitions Examiner
Office of Petitions

cc: **Myers Bigel Sibley & Sajovec**
PO Box 37428
Raleigh, NC 27627

UNITED STATES PATENT AND TRADEMARK OFFICE

COMMISSIONER FOR PATENTS
UNITED STATES PATENT AND TRADEMARK OFFICE
P.O. BOX 1450
ALEXANDRIA, VA 22313-1450
www.uspto.gov

COPY MAILED

OCT 0 4 2007

OFFICE OF PETITIONS

GENENCOR INTERNATIONAL, INC.
925 PAGE MILL ROAD
PALO ALTO, CA 94034-1013

In re Application of
Benjamin G. Davis, et al.
Application No. 10/791,628
Filed: March 1, 2004
Attorney Docket No. GC571-2-C1

ON PETITION

This is a decision in response to the petition, filed June 7, 2007, to revive the above-identified application under the provisions of 37 CFR 1.137(b).

The petition is **GRANTED**.

The application became abandoned for a failure to reply in a timely manner to a non-final Office action mailed May 2, 2006. A Notice of Abandonment was mailed on February 12, 2007. In response, on June 7, 2007, the present petition was filed.

The petition is not signed by a registered attorney or agent of record. However, in accordance with 37 CFR 1.34, the signature of Elena Quetermous appearing on the correspondence shall constitute a representation to the United States Patent and Trademark Office that she is authorized to represent the particular party on whose behalf she acts.

The petition satisfies the conditions for revival pursuant to the provisions of 37 CFR 1.137(b) in that petitioner has supplied (1) the reply in the form of an amendment; (2) the petition fee of $1,500; and (3) an adequate statement of unintentional delay.

The application is being referred to Technology Center AU 1652 for appropriate action by the Examiner in the normal course of business on the reply received June 7, 2007.

Telephone inquiries concerning this decision should be directed to the undersigned at (571) 272-3204. Inquiries relating to further prosecution should be directed to the Technology Center.

Sherry D. Brinkley
Petitions Examiner
Office of Petitions

UNITED STATES PATENT AND TRADEMARK OFFICE

UNITED STATES DEPARTMENT OF COMMERCE
United States Patent and Trademark Office
Address: COMMISSIONER FOR PATENTS
P.O. Box 1450
Alexandria, Virginia 22313-1450
www.uspto.gov

FROMMER LAWRENCE & HAUG LLP
745 Fifth Avenue
New York, NY 10151

Mail Date: 04/21/2010

Applicant	: Yasunori Azuma	: DECISION ON REQUEST FOR
Patent Number	: 7610432	: RECALCULATION of PATENT
Issue Date	: 10/27/2009	: TERM ADJUSTMENT IN VIEW
Appliction No	: 10/791,634	: OF WYETH AND NOTICE OF INTENT TO
Filed	: 03/02/2004	: ISSUE CERTIFICATE OF CORRECTION
		:

The Request for Recalculation is **GRANTED** to the extent indicated.

The patent term adjustment has been determined to be **274** days. The USPTO will *sua sponte* issue a certificate of correction reflecting the amount of PTA days determined by the recalculation.

Prior to the issuance of the certificate of correction, the USPTO will afford patentee an opportunity to be heard and request reconsideration. Accordingly, patentee has **one month or thirty (30) days**, whichever is longer, to file a request for reconsideration of this patent term adjustment calculation. See 35 U.S.C. 154(b)(3)(B)(ii) and 37 CFR 1.322(a)(4). No extensions of time will be granted under 37 CFR 1.136.

Patentee should use document code PET.OP if electronically filing a request for reconsideration of this patent term adjustment calculation. The patentee must also include the information required by 37 CFR 1.705(b)(2) and the fee required by 37 CFR 1.18(e). If patentee does not file a timely request for reconsideration of this patent term adjustment calculation including the information required by 37 CFR 1.705(b)(2) and the fee required by 37 CFR 1.18(e), the USPTO will issue a certificate of correction reflecting the PTA determination noted above.

Patentee should be aware that in order to preserve the right to review in the United States District Court for the District of Columbia of the USPTO patent term adjustment determination, patentee must ensure that he or she also take the steps required under 35 U.S.C. 154(b)(4)(A) in a timely manner. Nothing in the request for recalculation should be construed as providing an alternative time frame for commencing a civil action under 35 U.S.C. 154(b)(4)(A).

Any questions concerning this decision should be directed to the Office of Patent Legal Administration at 571-272-7702.

UNITED STATES PATENT AND TRADEMARK OFFICE

Commissioner for Patents
United States Patent and Trademark Office
P.O. Box 1450
Alexandria, VA 22313-1450
www.uspto.gov

LANDO & ANASTASI, LLP
ONE MAIN STREET, SUITE 1100
CAMBRIDGE MA 02142

MAILED

JUL 26 2010

OFFICE OF PETITIONS

In re Patent No. 7720076	: DECISION ON REQUEST
Dobbins et al.	: FOR
Issue Date: 05/18/2010	: RECONSIDERATION OF
Application No. 10/791655	: PATENT TERM ADJUSTMENT
Filed: 03/01/2004	:
Atty Docket No.	:
E2003-701430	:

This is a decision on the petition filed on March 24, 2010, which is being treated as a petition under 37 CFR 1.705(d) requesting that the patent term adjustment indicated on the above-identified patent be corrected to indicate that the term of the above-identified patent is extended or adjusted by one thousand four hundred eight (1408) days.

The petition to correct the patent term adjustment is **DISMISSED** with respect to making any change in the patent term adjustment determination under 35 U.S.C. § 154(b) of one thousand three hundred ninety-two (1392) days.

As the period from the filing date of the request for continued examination (RCE) to the issue date of the patent is not included in the "B" delay period, the over three year period begins on March 2, 2007, and ends on October 28, 2009, the day before the RCE was filed, and is 972, not 973 days. See 35 U.S.C. 154(b)(1)(B)(i). Considering the overlapping periods of 469 days, beginning on March 2, 2007, and ending on June 12, 2008, the date the first Office action was mailed, and 4 days, beginning on September 27, 2009, the day after the date four months after the date a reply was filed, and ending on September 30, 2009, the date a notice of allowance was mailed in response to the reply, the "B" delay is 499 (972 – 473 (469 + 4)) days.

Further, petitioners have failed to include the 15-day period of reduction for applicant delay in connection with the filing of an amendment filed after the mailing of the notice of allowance.

37 CFR 1.704(c)(10) states, that circumstances that constitute a failure of the applicant to engage in reasonable efforts to conclude processing or examination of an application also include the following circumstances, which will result in the following reduction of the period of adjustment set forth in § 1.703 to the extent that the periods are not overlapping: submission of an amendment under § 1.312 or other paper after a notice of allowance has been given or mailed, in

which case the period of adjustment set forth in § 1.703 shall be reduced by the lesser of: (i) The number of days, if any, beginning on the date the amendment under § 1.312 or other paper was filed and ending on the mailing date of the Office action or notice in response to the amendment under § 1.312 or such other paper; or (ii) Four months.

On February 24, 2010, an amendment was filed after the mailing of a notice of allowance. On March 10, 2010, 15 days after the filing of the amendment filed after the mailing of the notice of allowance, the Office mailed a letter in response to the notice. Accordingly, a 15 day period of reduction for applicant delay is warranted.

Accordingly, no change will be made to the patent term adjustment of 1392 (1142 days Office delay + 499 days three years delay – 249 (234 + 15) days of applicant delay) days indicated on the issued patent.

The Office acknowledges submission of the $200.00 fee set forth in 37 CFR 1.18(e). No additional fees are required.

Nothing in this decision shall be construed as a waiver of the requirement of 35 U.S.C. 154(b)(4) that any civil action by an applicant dissatisfied with a determination made by the Director under 35 U.S.C. 154(b)(3) be filed in the United States District Court for the District of Columbia within 180 days after the grant of the patent.

Telephone inquiries specific to this matter should be directed to the undersigned at (571) 272-3231.

D Wood

Douglas I. Wood
Senior Petitions Attorney
Office of Petitions

UNITED STATES PATENT AND TRADEMARK OFFICE

Commissioner for Patents
United States Patent and Trademark Office
P.O. Box 1450
Alexandria, VA 22313-1450
www.uspto.gov

FOLEY & LARDNER
777 EAST WISCONSIN AVENUE
SUITE 3800
MILWAUKEE WI 53202-5308

COPY MAILED

OCT 14 2004

OFFICE OF PETITIONS

In re Application of
Al Uzumcu et al.
Application No. 10/791,671
Filed: March 2, 2004
Attorney Docket No. 035568-0127

: DECISION REFUSING STATUS
: UNDER 37 CFR 1.47(a)

This is in response to the petition filed under 37 CFR 1.47(a) on September 17, 2004.

The petition is **DISMISSED**.

Rule 47 applicant is given TWO MONTHS from the mailing date of this decision to respond, correcting the below-noted deficiencies. Any response should be entitled "Request for Reconsideration of Petition Under 37 CFR 1.47(a). and may include an oath or declaration executed by the inventor. **Failure to respond will result in abandonment of the application**. Any extensions of time will be governed by 37 CFR 1.136(a).

The above-identified application was filed on March 2, 2004, without an oath or declaration. Accordingly, a Notice to File Missing Parts was mailed May 21, 2004 requiring inter alia, an executed oath or declaration, filing fees and a surcharge for their late filing.

In response, an oath or declaration naming Al Uzumcu, Scott Adler, Brian Albrecht and Timothy Baker as joint inventors was filed with the instant petition and a request for a two month extension of time. The declaration was signed by all joint inventors except Mr. Uzumcu, The present petition seeks status under 37 CFR 1.47 claiming that joint inventor Uzumcu refuses to execute the declaration.

A grantable petition under 37 CFR 1.47(a) requires: (1) proof that the non-signing inventor cannot be reached or refuses to sign the oath or declaration after having been presented with the application papers (specification, claims and drawings); (2) an acceptable oath or declaration in compliance with 35 U.S.C. §§ 115 and 116; (3) the petition fee; and (4) a statement of the last known address of the non-signing inventor. Applicant lacks items (1) set forth above.

In regards to item (1), petitioners have not provided sufficient proof that a copy of the complete application (specification, including claims, drawings, if any, and the

declaration) was sent to the non-signing inventor.

A statement made by the attorney of record, Victor Henzi, indicates that on two separate occasions, the declaration and power of attorney were sent, under his direction by Administrative Assistant Debra Sykes, to Mr. Uzumcu, that a telephone message by Mr. Uzumcu confirmed his receipt of same and that in a follow-up conversation, Mr. Uzumcu advised that he would not be signing the declaration for the above identified application. The evidence presented however is not sufficient to show that Mr. Uzumcu had the benefit of reviewing the application, thus the requirements for status under 37 CFR 1.47(a) have not been met.

Petitioners may show proof that a copy of the application was sent or given to the non-signing inventor for review by providing a copy of the cover letter transmitting the application papers to the non-signing inventor or details given in an affidavit or declaration of facts by a person having first hand knowledge of the details.

Likewise, before a *bona fide* refusal can be shown, the non-signing inventor must have been given an opportunity to review the application. Therefore, petitioners must show proof that the non-signing inventor refuses to sign the declaration after being sent or given a copy of the application papers. If there is a written refusal, petitioners should submit a copy of that refusal with any renewed petition. If the refusal was made orally to a person, then that person must provide details of the refusal in an affidavit or declaration of facts.

Further correspondence with respect to this matter should be addressed as follows:

By Mail: Mail Stop PETITIONS
Commissioner for Patents
Post Office Box 1450
Alexandria, VA 22313-1450

By fax: (703) 872-9306
ATTN: Office of Petitions

Telephone inquiries concerning this matter may be directed to the undersigned Petitions Attorney at (571) 272-3212.

Patricia Faison-Ball
Senior Petitions Attorney
Office of Petitions

UNITED STATES PATENT AND TRADEMARK OFFICE

Commissioner for Patents
United States Patent and Trademark Office
P.O. Box 1450
Alexandria, VA 22313-1450
www.uspto.gov

FOLEY & LARDNER
777 EAST WISCONSIN AVENUE
SUITE 3800
MILWAUKEE WI 53202-5308

COPY MAILED

DEC 23 2004

OFFICE OF PETITIONS

In re Application of :
Al Uzumcu et al. :
Application No. 10/791,671 : DECISION ACCORDING STATUS
Filed: March 2, 2004 : UNDER 37 CFR 1.47(a)
Attorney Docket No: 035568-0127 :

This is in response to the renewed petition filed under 37 CFR 1.47(a) on December 13, 2004.

The petition is **GRANTED**.

The above-identified application was filed on March 2, 2004, without an oath or declaration. Accordingly, a Notice to File Missing Parts was mailed May 21, 2004 requiring inter alia, an executed oath or declaration, filing fees and a surcharge for their late filing. In response, on September 17, 2004, a petition was filed, accompanied by inter alia, the late filing surcharge and a two (2) month extension of time. On October 14, 2004, the petition was dismissed because the petitioners failed to show that a complete application had been sent to the non-signing inventor Al Uzumcu.

A grantable petition under 37 CFR 1.47(a) requires: (1) proof that the non-signing inventor cannot be reached or refuses to sign the oath or declaration after having been presented with the application papers (specification, claims and drawings); (2) an acceptable oath or declaration in compliance with 35 U.S.C. §§ 115 and 116; (3) the petition fee; and (4) a statement of the last known address of the non-signing inventor. The above-identified application and papers have been reviewed and found in compliance with 37 CFR 1.47(a). In view thereof, this application is hereby accorded Rule 1.47(a) status.

In response to the decision dismissing the petition filed September 17, 2004, the instant petition shows that a complete application had been sent to non-signing inventor Al Uzumcu.

A review of the file reveals that the petition fee in the amount of $130.00 was not submitted with the September 17, 2004 and in view of the authorization, deposit account no. 06-1447 will be charged.

All requirements under 37 CFR 1.47(a) therefore having been met, as provided in Rule 1.47(c), this Office will forward notice of this application's filing to the non-signing inventor at the address given in the petition. Notice of the filing of this application will also be published in the Official Gazette.

This application is being forwarded to Technology Center 3723 for examination in due course.

Telephone inquiries related to this decision should be directed to the undersigned Petitions Attorney at (571) 272-3212.

Patricia Faison-Ball
Senior Petitions Attorney
Office of Petitions

UNITED STATES PATENT AND TRADEMARK OFFICE

Commissioner for Patents
United States Patent and Trademark Office
P.O. Box 1450
Alexandria, VA 22313-1450
www.uspto.go

Paper No.

COPY MAILED

NOV 0 4 2004

OFFICE OF PETITIONS

STERN KESSLER
GOLDSTEIN & FOX P.L.L.C.
1100 NEW YORK AVENUE N.W.
WASHINGTON, DC 20005-3934

In re Application of	:	
Baer et al.	:	DECISION GRANTING
Application No. 10/791,686	:	STATUS UNDER
Filed: March 3, 2004	:	37 CFR 1.47(a)
Attorney Docket No.	:	
1875.3970001	:	

This is in response to a Petition Under 37 CFR 1.47, filed September 21, 2004, to allow the other inventor(s) to proceed with the application on behalf of himself or herself and the nonsigning inventor.

The petition is **granted**.

The above-identified application and papers have been reviewed and found in compliance with 37 CFR 1.47(a). This application is hereby accorded Rule 1.47(a) status.

Petitioner has shown that the non-signing inventor, Patrick Law, refuse to join in the application.

As provided in Rule 1.47(a), this Office will forward notice of this application's filing to the non-signing inventor at the address given in the Petition. Notice of the filing of this application will also be published in the Official Gazette.

The application file is being returned to the Office of Initial Patent Examination for continued processing.

Telephone inquiries concerning this matter should be directed to Petitions Attorney Derek L. Woods at (571) 272-3232.

Derek L. Woods
Attorney/Advisor
Office of Petitions

UNITED STATES PATENT AND TRADEMARK OFFICE

Commissioner for Patents
United States Patent and Trademark Office
P.O. Box 1450
Alexandria, VA 22313-1450
www.uspto.gov

GARDERE / JAMES HARDIE
GARDERE WYNNE SEWELL, LLP
1601 ELM STREET
SUITE 3000
DALLAS, TX 75201

COPY MAILED

AUG 2 5 2008

In re Application of :
Jeffrey Bergh, et. al. :
Application No. 10/791,688 : DECISION ON PETITION
Filed: March 1, 2004 :
Attorney Docket No. 129843.1082 (H.072A) :

This is a decision on the petition under the unintentional provisions of 37 CFR 1.137(b), filed July 23, 2008, to revive the above-identified application.

The petition is **GRANTED**.

This application became abandoned for failure to timely file a reply within the meaning of 37 CFR 1.113 to the Final Rejection of November 23, 2007. The proposed reply required for consideration of a petition to revive must be a Notice of Appeal (and appeal fee required by 37 CFR 41.20(b)(2)), an amendment that *prima facie* places the application in condition for allowance, a Request for Continued Examination (RCE) and submission (37 CFR 1.114), or the filing of a continuing application under 37 CFR 1.53(b). See MPEP 711.03(c)(III)(A)(2). A three month extension of time pursuant to the provisions of 37 CFR 1.136(a) was obtained. Accordingly, the date of abandonment of this application is February 24, 2008.

The petition satisfies the requirements of 37 CFR 1.137(b) in that petitioner has supplied (1) the reply in the form of a Request for Continued Examination (RCE) and fee of $810, and the submission required by 37 CFR 1.114; (2) the petition fee of $1540; and (3) a proper statement of unintentional delay.

There is no indication that the person signing the petition was ever given a power of attorney or authorization of agent to prosecute the above-identified application. However, in accordance with 37CFR 1.34(a), the signature of Jason R. Fulmer appearing on the petition shall constitute a representation to the United States Patent and Trademark Office that he is authorized to represent the particular party in whose behalf he acts. If petitioner desires to receive future correspondence regarding this application, the appropriate power of attorney or authorization of agent must be submitted.

It is not apparent whether the statement of unintentional delay was signed by a person who would have been in a position of knowing that the entire delay in filing the required reply from the due date for the reply until the filing of a grantable petition pursuant to 37 CFR 1.137(b) was unintentional. Nevertheless, in accordance with 37 CFR 10.18, the statement is accepted as constituting a certification of unintentional delay. However, in the event that petitioner has no knowledge that the delay was unintentional, petitioner must make such an inquiry to ascertain that, in fact, the delay was unintentional. If petitioner discovers that the delay was intentional, petitioner must so notify the Office.

In additional to receiving a Petition for Revival of an Application for Patent Abandoned Unintentionally Under 37CFR 1.137(b), the United States Patent and Trademark Office received a payment of $1050 for a three month extension of time on July 23, 2008.

An extension of time under 37 CFR 1.136 must be filed prior to the expiration of the maximum extendable period for reply. *See* In re Application of S., 8 USPQ2d 1630, 1631 (Comm'r Pats. 1988). Since the $1050 extension of time fee was subsequent to the maximum extendable period for reply, this fee is unnecessary and will be credited to the petitioner's credit card.

Telephone inquiries concerning this decision should be directed to Denise Williams at (571) 272-8930.

This application is being referred to Technology Center AU 3679 for appropriate action by the Examiner in the normal course of business on the reply received.

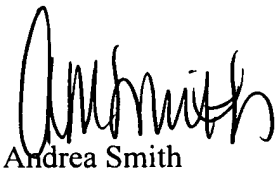

Andrea Smith
Petitions Examiner
Office of Petitions

UNITED STATES PATENT AND TRADEMARK OFFICE

Commissioner for Patents
United States Patent and Trademark Office
P.O. Box 1450
Alexandria, VA 22313-1450
www.uspto.gov

TROXELL LAW OFFICE PLLC
Suite 1404
5205 Leesburg Pike
Falls Church, VA 22041

COPY MAILED

SEP 2 3 2004

OFFICE OF PETITIONS

In re Application of :
Wu, et al. :
Application No.: 10/791,709 : ON PETITION
Filed: March 4, 2004 :
Attorney Docket No: 3232-10 :

This is a decision on the petition under 37 CFR 1.28(c), filed August 23, 2004.

The petition is **GRANTED.**

The record reflects that the filing fee and assignment recordation fee for the above-cited application were paid at the small entity rate on March 4, 2004. The amount paid was $495.00. Petitioner later discovered that the inventive entity did not qualify as a small entity and filed the instant petition, accordingly.

Petitioner has remitted the deficient amount of $455.00.

Pursuant to 37 CFR 1.28(d), the payment of the deficient amount will be treated under 37 CFR 1.27(g)(2) as a notification of a loss of entitlement to small entity status.

The application file will be directed to Technology Center 2800 for further processing.

Telephone inquiries regarding this decision should be directed to the undersigned at (703) 305-0010.

Kenya A. McLaughlin

Kenya A. McLaughlin
Petitions Attorney
Office of Petitions

UNITED STATES PATENT AND TRADEMARK OFFICE

Commissioner for Patents
United States Patent and Trademark Office
P.O. Box 1450
Alexandria, VA 22313-1450
www.uspto.gov

NORTH AMERICA INTELLECTUAL
PROPERTY CORPORATION
P.O. BOX 506
MERRIFIELD, VA 22116

COPY MAILED

DEC 15 2005

OFFICE OF PETITIONS

In re Application of :
Wu, et al. :
Application No.10/791,709 : DECISION DISMISSING PETITION
Filed: March 4, 2004 :
Attorney Docket No. 3232-10 :

This is a decision on the petition under 37 CFR 1.182, filed November 17, 2005, requesting that the third named inventor's name be corrected due to a transliteration error.

The petition is **dismissed as moot.**

Petitioner requests that the name of the third named inventor be reflected as Rong-Yih Hwang. A review of the application file revealed that the declaration under 37 CFR 1.63 filed March 4, 2004, reflects the name of the third inventor as "Rong-Yih Hwang". Further, Office computer records reflect the name of the third inventor as Rong-Yih Hwang. There is no relief that can be provided by the instant petition as the name of the third inventor reflected in the application history is the same as the name requested in the instant petition. The petition is, therefore, dismissed as moot.

Further correspondence with respect to this matter should be addressed as follows:

By mail: Commissioner for Patents
United States Patent and Trademark Office
Box 1450
Alexandria, VA 22313-1450

By facsimile: (571) 273-8300
Attn: Office of Petitions

Any inquiries related to this decision should be directed to the undersigned at (571) 272-3222.

Kenya A. McLaughlin

Kenya A. McLaughlin
Petitions Attorney
Office of Petitions

UNITED STATES PATENT AND TRADEMARK OFFICE

COMMISSIONER FOR PATENTS
UNITED STATES PATENT AND TRADEMARK OFFICE
P.O. BOX 1450
ALEXANDRIA, VA 22313-1450
WWW.USPTO.GOV

Paper No. None

TROXELL LAW OFFICE PLLC
Suite 1404
5205 Leesburg Pike
Falls Church VA 22041

COPY MAILED

SEP 0 2 2004

OFFICE OF PETITIONS

In re Application of
Tzong-Liang Tsai et al.
Application No. 10/791,710
Filed: March 4, 2004
Attorney Docket No. 3232-9
Title: GROUP III NITRIDE SEMICONDUCTOR DEVICE AND ITS METHOD OF MANUFACTURE

DECISION ON PETITION
UNDER 37 C.F.R. §1.28(c)

This is a notice regarding your request for acceptance of a fee deficiency submission under 37 CFR §1.28. On September 1, 1998, the Court of Appeals for the Federal Circuit held that 37 CFR §1.28(c) is the sole provision governing the time for correction of the erroneous payment of the issue fee as a small entity. See DH Technology v. Synergystex International, Inc. 154 F.3d 1333, 47 USPQ2d 1865 (Fed. Cir. Sept. 1, 1998).

The Office no longer investigates or rejects original or reissue applications under 37 CFR §1.56. 1098 Off. Gaz. Pat. Office 502 (January 3, 1989). Therefore, nothing in this notice is intended to imply that an investigation was done.

Your fee deficiency submission under 37 CFR §1.28 is hereby accepted. The petition is **GRANTED** accordingly.

This file is being forwarded to Technology Center 2800.

Telephone inquiries regarding this decision should be directed to the undersigned at (703) 305-0011. Please note that on approximately September 28, 2004, the Office of Petitions will relocate to the new PTO location in Alexandria. Although the mailing address will remain the same, the general phone number for the Office of Petitions which should be used for status requests will change to 571-272-3282, and the telephone number for the undersigned will change to 571-272-3225.

Paul Shanoski

Paul Shanoski
Senior Attorney
Office of Petitions
United States Patent and Trademark Office

UNITED STATES PATENT AND TRADEMARK OFFICE

Commissioner for Patents
United States Patent and Trademark Office
P.O. Box 1450
Alexandria, VA 22313-1450
www.uspto.gov

JUN 07 2004

Leonard W. Sherman
Sherman & Shalloway
413 N. Washington Street
Alexandria VA 22314

In re Application of	:	
Felix W. Fenter et al	:	DECISION PETITION
Serial No.: 10/791,733	:	
Filed: March 4, 2004	:	
For: Anastomosis Apparatus and Method	:	
With Computer-Aided Automated Features	:	

This is in response to applicants' petition filed March 4, 2004, to make the above-identified application special under the provisions of 37 CFR 1.102(c), based on the age of the applicant.

Applicant has satisfied the provisions set forth in M.P.E.P. 708.02, IV. Therefore the petition is **GRANTED**.

The application will be forwarded to the examiner for action on the merits commensurate with this decision.

Should there be any questions with regard to this letter please contact John Kittle by letter addressed to the Director, Technology Center 3700/2900, P.O. Box 1450 Alexandria, VA 22313-1450, or by telephone at (703) 308-0873 or by facsimile transmission at (703) 308-3139.

John E. Kittle
Director,
Technology Center 3700/2900

UNITED STATES PATENT AND TRADEMARK OFFICE

COMMISSIONER FOR PATENTS
UNITED STATES PATENT AND TRADEMARK OFFICE
P.O. BOX 1450
ALEXANDRIA, VA 22313-1450
www.uspto.gov

MAIL

MAY 0 4 2005

DIRECTOR OFFICE
TECHNOLOGY CENTER 2100

MATTINGLY, STANGER, MALUR & BRUNDIDGE, P.C.
1800 DIAGONAL ROAD
SUITE 370
ALEXANDRIA VA 22314

In re Application of: Watanabe
Application No. 10/791,734
Filed: March 4, 2004
For: DATA MIGRATION METHOD

DECISION ON PETITION
TO MAKE SPECIAL
(ACCELERATED EXAMINATION)
UNDER M.P.E.P. §708.02 (VIII)

This is a response to the petition filed 24 March 2005, under 37 C.F.R. §1.102(d) and M.P.E.P. §708.02 (VIII): Accelerated Examination, to make the above-identified application special.

The Petition is **DISMISSED**.

M.P.E.P. §708.02, Section VIII which sets out the prerequisites for a grantable petition for Accelerated Examination under 37 C.F.R. §1.102(d) states in relevant part:

A new application (one which has not received any examination by the examiner) may be granted special status provided that applicant (and this term includes applicant's attorney or agent) complies with each of the following items:

(a) Submits a petition to make special accompanied by the fee set forth in **37 CFR 1.17(h)**;

(b) Presents all claims directed to a single invention, or if the Office determines that all the claims presented are not obviously directed to a single invention, will make an election without traverse as a prerequisite to the grant of special status;

(c) Submits a statement(s) that a pre-examination search was made, listing the field of search by class and subclass, publication, Chemical Abstracts, foreign patents, etc. The pre-examination search must be directed to the invention as claimed in the application for which special status is requested. A search made by a foreign patent office satisfies this requirement;

(d) Submits one copy each of the references deemed most closely related to the subject matter encompassed by the claims if said references are not already of record; and

(e) Submits a detailed discussion of the references, which discussion points out, with the particularity required by 37 CFR 1.111 (b) and (c), how the claimed subject matter is patentable over the references.

In those instances where the request for this special status does not meet all the prerequisites set forth above, **applicant will be notified and the defects in the request will be stated.** The application will remain in the status of a new

application awaiting action in its regular turn. In those instances where a request is defective in one or more respects, applicant will be given one opportunity to perfect the request in a renewed petition to make special. If perfected, the request will then be granted. If not perfected in the first renewed petition, any additional renewed petitions to make special may or may not be considered at the discretion of the Technology Center (TC) Special Program Examiner.

The petition filed 24 March 2005 fails to adequately meet requirement (e) of the criteria set forth above. The discussion of the references does not point out with the particularity required by 37 CFR 1.111(b) and (c) how the claimed subject matter is patentable over the references. The discussion of the references is confusing. Petitioner states that the "present invention as recited in the claims is not taught or suggested by any of the above noted references". Petitioner then goes on to state that the references fail to disclose or suggest essentially all of the limitations of independent claim 1. It is not clear if these statements are intended to mean that none of the elements of claim 1 are disclosed by the references or that the entirety of claim 1 is not disclosed by the references. If the intent is the former, it would be difficult to conclude that the search was directed to the claimed invention if essentially *none* of the claim limitations were found in the prior art deemed "most closely related". If the intent is the latter, a statement that the entirety of independent claim 1 is not disclosed by the four references purported to be "most closely related" is not a sufficient detailed description. Clarification is required. Petitioner then further states that one of the references, Ofek '640, fails to disclose the limitation of "the host computer . . . independently access[ing] either the old storage system or the new storage system prior to the data migration phase". Petitioner then additionally states that the "above described deficiencies of Ofek et al '640 are also evident in each of the above described references". It is unclear whether this is intended to refer to the specific limitation discussed above, to all of the limitations of claim 1, or to the entirety of claim 1. Clarification is required.

Petition to Make Special **DISMISSED**.

Petitioner is given one opportunity to perfect the petition. Any request for reconsideration must be filed within TWO MONTHS of the mail date of this decision.

Until the renewed petition is submitted, the application will be returned to the examiner's docket to await treatment on the merits in the normal order of examination.

Pinchus M. Laufer
Special Program Examiner
Technology Center 2100
Computer Architecture, Software and Information Security
571-272-3599

ds

UNITED STATES PATENT AND TRADEMARK OFFICE

COMMISSIONER FOR PATENTS
UNITED STATES PATENT AND TRADEMARK OFFICE
P.O. BOX 1450
ALEXANDRIA, VA 22313-1450
www.uspto.gov

MAIL

AUG 2 9 2005

DIRECTOR OFFICE
TECHNOLOGY CENTER 2100

MATTINGLY, STANGER, MALUR & BRUNDIDGE, P.C.
1800 DIAGONAL ROAD
SUITE 370
ALEXANDRIA VA 22314

In re Application of: Watanabe
Application No. 10/791,734
Filed: March 4, 2004
For: DATA MIGRATION METHOD

DECISION ON PETITION
TO MAKE SPECIAL
(ACCELERATED EXAMINATION)
UNDER M.P.E.P. §708.02 (VIII)

This is a response to the renewed petition filed 28 June 2005, under 37 C.F.R. §1.102(d) and M.P.E.P. §708.02 (VIII): Accelerated Examination, to make the above-identified application special.

The renewed petition was filed in response to a dismissal of the original petition filed 24 March 2005. The petition was dismissed for failure to provide a detailed discussion of the references, which discussion points out with the particularity required by 37 CFR 1.111(b) and (c), how the claimed subject matter is patentable over the references.

Applicants' submission filed 28 June 2005 corrects the deficiency noted in the original decision. The combined submissions meet all the criteria set out above. Accordingly, the petition is **GRANTED**.

The application file is being forwarded to the Examiner of Record for accelerated examination according to the procedures set forth in MPEP § 708.02, Section VIII.

Pinchus M. Laufer
Special Program Examiner
Technology Center 2100
Computer Architecture, Software and Information Security
571-272-3599

ds

UNITED STATES PATENT AND TRADEMARK OFFICE

Commissioner for Patents
United States Patent and Trademark Office
P.O. Box 1450
Alexandria, VA 22313-1450
www.uspto.gov

MAIL

JUL 2 0 2005

DIRECTOR OFFICE
TECHNOLOGY CENTER 2100

MATTINGLY, STANGER, MALUR & BRUNDIDGE, P.C.
1800 DIAGONAL RD., SUITE 370
ALEXANDRIA, VIRGINIA 22314

In re Application of: SUZUKI et al.
Application No. 10/791,761
Filed: March 4, 2004
For: CONNECTION SUPPORT METHOD FOR DISK ARRAY DEVICE

DECISION ON PETITION FOR ACCELERATED EXAMINATION UNDER M.P.E.P.§708.02(VIII)

This is a decision to the petition filed May 10, 2005, under 37 C.F.R. 102(d) and M.P.E.P. § 708.02(VIII): Accelerated Examination; to make the above-identified application special.

The Petition is **GRANTED**.

M.P.E.P. § 708.02, Section VIII which sets out the prerequisites for a grantable petition for Accelerated Examination under 37 C.F.R. § 102(d) states in relevant part:

A new application (one which has not received any examination by the examiner) may be granted special status provided that applicant (and this term includes applicant's attorney or agent) complies with each of the following items:

(a) Submits a petition to make special accompanied by the fee set forth in 37 CFR 1.17(h);

(b) Presents all claims directed to a single invention, or if the Office determines that all the claims presented are not obviously directed to a single invention, will make an election without traverse as a prerequisite to the grant of special status;

(c) Submits a statement(s) that a pre-examination search was made, listing the field of search by class and subclass, publication, Chemical Abstracts, foreign patents, etc. The pre-examination search must be directed to the invention as claimed in the application for which special status is requested. A search made by a foreign patent office satisfies this requirement;

(d) Submits one copy each of the references deemed most closely related to the subject matter encompassed by the claims if said references are not already of record; and

(e) Submits a detailed discussion of the references, which discussion points out, with the particularity required by 37 CFR 1.111 (b) and (c), how the claimed subject matter is patentable over the references.

Petition to Make Special **GRANTED** since all of the requirements for special status under MPEP § 708.02(VIII) have been met.

The application file is being forwarded to the Examiner for accelerated examination in accordance with the procedures set forth in M.P.E.P. §708.02, Section VIII. If the application is subsequently allowed, it will be given priority for printing. See M.P.E.P. §1309.

Brian L. Johnson
Special Program Examiner
Technology Center 2100
Computer Architecture, Software and Information Security
571-272-3595

7/18/05

AWK

UNITED STATES PATENT AND TRADEMARK OFFICE

Commissioner for Patents
United States Patent and Trademark Office
P.O. Box 1450
Alexandria, VA 22313-1450
www.uspto.gov

TROXELL LAW OFFICE PLLC
5205 LEESBURG PIKE, SUITE 1404
FALLS CHURCH, VA 22041

COPY MAILED

SEP 0 3 2004

OFFICE OF PETITIONS

In re Application of	:	
Wei-En Chien et al	:	
Application No. 10/791,765	:	NOTICE
Filed: March 4, 2004	:	
Attorney Docket No. 3232-8	:	

This is a notice regarding your request for acceptance of a fee deficiency submission under 37 CFR 1.28. On September 1, 1998, the Court of Appeals for the Federal Circuit held that 37 CFR 1.28(c) is the sole provision governing the time for correction of the erroneous payment of the issue fee as a small entity. **See DH Technology v. Synergystex International, Inc. 154 F.3d 1333, 47 USPQ2d 1865 (Fed. Cir. Sept. 1, 1998).**

The Office no longer investigates or rejects original or reissue applications under 37 CFR 1.56. **1098 Off. Gaz. Pat. Office 502 (January 3, 1989).** Therefore, nothing in this Notice is intended to imply that an investigation was done.

Your fee deficiency submission under 37 CFR 1.28 is hereby **ACCEPTED.**

This application is no longer entitled to small entity status. Accordingly, all future fees paid in this application must be paid at the large entity rate.

Inquiries related to this communication should be directed to the undersigned at (703) 305-8680.

Frances Hicks

Frances Hicks
Petitions Examiner
Office of Petitions
Office of the Deputy Commissioner
for Patent Examination Policy

UNITED STATES PATENT AND TRADEMARK OFFICE

OFFICE

COPY MAILED

JUL 2 4 2006

Director's Office
Office of Patent Publication

TROXELL LAW OFFICE PLLC
SUITE 1404
5205 LEESBURG PIKE
FALLS CHURCH, VA 22041

In re Application of :
HUANG, CHIEN-PIN :
Application No. 10/791,766 : **DECISION ON PETITION**
Filed: March 4, 2004 :
Attorney Docket No. 3227-39 :

This is a decision on the Petition To Withdraw Holding Of Abandonment Under 37 CFR 1.181, received in the United States Patent & Trademark (USPTO) via facsimile transmission on July 17, 2006.

The petition is **DISMISSED**. Any request for reconsideration of this decision, or as explained below, filing a petition seeking revival under 37 CFR § 1.137, must be filed within TWO (2) MONTHS from the mail date of this decision.

The above-identified application was held abandoned for applicant's failure to timely pay the issue fee, as required in the Notice of Allowance and Fee(s) Due mailed February 27, 2006. The Notice of Abandonment, mailed on June 26, 2006 indicates, "The submitted fee of $0 is insufficient. A balance of $1,000 is due".

The Office acknowledges receipt of Part B – Fee(s) Transmittal on May 30, 2006, authorizing that the Issue Fee and Publication Fee be charged to Deposit Account No. 50-1874. On May 30, 2006, when an attempt was made by the Office of Finance to charge the fees, there were insufficient funds in the Deposit Account to charge the required fees.

37 CFR 1.25 (a) and (b), which states in part:

> 1.25(a) ...An amount sufficient to cover all fee, services, copies, etc., requested must always be on deposit. Charges to accounts with insufficient funds will not be accepted."
>
> 1.25 (b) ...An authorization to charge a fee to a deposit account will not be considered payment of the fee on the date the authorization to charge the fee is effective as to the particular fee to be charged unless sufficient funds are present in the account to cover the fee.

In light of the non-compliance with 37 CFR 1.25, the holding of abandonment cannot be withdrawn.

Applicant may seek relief by filing a petition for Revival of Abandoned Application under CFR § 1.137 (a) or (b). (Forms are available at USPTO website http://www.uspto.gov)

- Under 37 CFR 1.137(a), a petition for the revival of an ***unavoidable*** abandoned application
- Under 37 CFR 1.137(b), a petition for the revival of an ***unintentionally*** abandoned application

Further inquires with respect to filing a petition under 37 CFR § 1.137 may be directed to the Office of Petitions at 571-272-3282 or addressed as follows:

By mail: Mail Stop Petitions
Commissioner for Patents
Office of Petitions
P O Box 1450
Alexandria, VA 22313-1450

Telephone inquires concerning this decision matter may be directed to the undersigned at 703 308-9250 Ext. 137.

Thomas E. Hawkins
Paralegal Specialist
Office of the Director
Office of Patent Publications

UNITED STATES PATENT AND TRADEMARK OFFICE

Commissioner for Patents
United States Patent and Trademark Office
P.O. Box 1450
Alexandria, VA 22313-1450
www.uspto.gov
DIW Mar-07

TROXELL LAW OFFICE PLLC
SUITE 1404
5205 LEESBURG PIKE
FALLS CHURCH VA 22041

COPY MAILED

MAR 0 6 2007

OFFICE OF PETITIONS

In re Application of :
Chien-Pin Huang :
Application No. 10/791,766 : DECISION ON PETITION
Filed: 03/04/2004 :
Attorney Docket No. 3227-39 :

This is a decision on the petition filed on 30 October, 2006, under 37 CFR 1.137(b),[1] to revive the above-identified application.

The petition is **GRANTED**.

The application became abandoned on 28 May, 2006, for failure to timely submit the issue and publication fees in response to the Notice of Allowance and Fee(s) Due mailed on 27 February, 2006,

---

[1] Effective December 1, 1997, the provisions of 37 CFR 1.137(b) now provide that where the delay in reply was unintentional, a petition may be filed to revive an abandoned application or a lapsed patent pursuant to 37 CFR 1.137(b). A grantable petition filed under the provisions of 37 CFR 1.137(b) must be accompanied by:

(1) the required reply, unless previously filed. In a nonprovisional application abandoned for failure to prosecute, the required reply may be met by the filing of a continuing application. In a nonprovisional utility or plant application filed on or after June 8, 1995, and abandoned for failure to prosecute, the required reply may also be met by the filing of a request for continuing examination in compliance with § 1.114. In an application or patent, abandoned or lapsed for failure to pay the issue fee or any portion thereof, the required reply must be the payment of the issue fee or any outstanding balance thereof. In an application, abandoned for failure to pay the publication fee, the required reply must include payment of the publication fee.

(2) the petition fee as set forth in 37 CFR 1.17(m);

(3) a statement that the entire delay in filing the required reply from the due date for the reply until the filing of a grantable petition pursuant to 37 CFR 1.137(b) was unintentional. The Commissioner may required additional information where there is a question whether the delay was unintentional; and

(4) any terminal disclaimer (and fee as set forth in 37 CFR 1.20(d)) required pursuant to 37 CFR 1.137(c)).

which set a three (3) month statutory period for reply. Notice of Abandonment was mailed on 26 June, 2006. The petition to withdraw the holding of abandonment filed on 17 July, 2006, was dismissed on 24 July, 2006.

Receipt of the issue and publication fees is acknowledged.

The application is being forwarded to the Publishing Division for processing into a patent.

Telephone inquiries concerning this matter may be directed to the undersigned at (571)272-3231.

Douglas I. Wood
Senior Petitions Attorney
Office of Petitions

UNITED STATES PATENT AND TRADEMARK OFFICE

Commissioner for Patents
United States Patent and Trademark Office
P.O. Box 1450
Alexandria, VA 22313-1450
www.uspto.gov
DW Nov-07

OBLON, SPIVAK, MCCLELLAND MAIER & NEUSTADT, P.C.
1940 DUKE STREET
ALEXANDRIA VA 22314

COPY MAILED

NOV-09 2007

OFFICE OF PETITIONS

In re Patent No. 7250155 :
Issue Date: 07/31/2007 :
Application Number: 10/791783 : ON PETITION
Filing Date: 03/04/2004 :
Attorney Docket Number: :
249967US0X :

This is a decision in reference to the petition filed on September 5, 2007, which is being treated as a request under 37 CFR 3.81(b)[1] to correct the assignee on the front page of the above-identified patent by way of a Certificate of Correction.

The petition is **granted**.

Telephone inquires concerning this matter may be directed to the undersigned at 571.272.3231. Any questions concerning the issuance of the Certificate of Correction should be directed to the Certificates of Correction Branch at 703.305.8309.

The file is being forwarded to the Certificates of Correction Branch for issuance of the requested Certificate of Correction.

D Wood

Douglas I. Wood
Senior Petitions Attorney
Office of Petitions

[1] See Official Gazette of 22 June, 2004.

UNITED STATES PATENT AND TRADEMARK OFFICE

UNITED STATES DEPARTMENT OF COMMERCE
United States Patent and Trademark Office
Address: COMMISSIONER FOR PATENTS
P.O. Box 1450
Alexandria, Virginia 22313-1450
www.uspto.gov

BIRCH STEWART KOLASCH & BIRCH
PO BOX 747
FALLS CHURCH, VA 22040-0747

Mail Date: 04/22/2010

Applicant	: Hirofumi Oda	: DECISION ON REQUEST FOR
Patent Number	: 7605863	: RECALCULATION of PATENT
Issue Date	: 10/20/2009	: TERM ADJUSTMENT IN VIEW
Appliction No	: 10/791,786	: OF WYETH AND NOTICE OF INTENT TO
Filed	: 03/04/2004	: ISSUE CERTIFICATE OF CORRECTION
		:

The Request for Recalculation is **GRANTED** to the extent indicated.

The patent term adjustment has been determined to be **1395** days. The USPTO will *sua sponte* issue a certificate of correction reflecting the amount of PTA days determined by the recalculation.

Prior to the issuance of the certificate of correction, the USPTO will afford patentee an opportunity to be heard and request reconsideration. Accordingly, patentee has **one month or thirty (30) days**, whichever is longer, to file a request for reconsideration of this patent term adjustment calculation. See 35 U.S.C. 154(b)(3)(B)(ii) and 37 CFR 1.322(a)(4). No extensions of time will be granted under 37 CFR 1.136.

Patentee should use document code PET.OP if electronically filing a request for reconsideration of this patent term adjustment calculation. The patentee must also include the information required by 37 CFR 1.705(b)(2) and the fee required by 37 CFR 1.18(e). If patentee does not file a timely request for reconsideration of this patent term adjustment calculation including the information required by 37 CFR 1.705(b)(2) and the fee required by 37 CFR 1.18(e), the USPTO will issue a certificate of correction reflecting the PTA determination noted above.

Patentee should be aware that in order to preserve the right to review in the United States District Court for the District of Columbia of the USPTO patent term adjustment determination, patentee must ensure that he or she also take the steps required under 35 U.S.C. 154(b)(4)(A) in a timely manner. Nothing in the request for recalculation should be construed as providing an alternative time frame for commencing a civil action under 35 U.S.C. 154(b)(4)(A).

Any questions concerning this decision should be directed to the Office of Patent Legal Administration at 571-272-7702.

UNITED STATES PATENT AND TRADEMARK OFFICE

Commissioner for Patents
United States Patent and Trademark Office
P.O. Box 1450
Alexandria, VA 22313-1450
www.uspto.gov

SILVERBROOK RESEARCH PTY LTD
393 DARLING STREET
BALMAIN 2041 AU AUSTRALIA

COPY MAILED

SEP 26 2008

OFFICE OF PETITIONS

In re Application of
Silverbrook
Application No. 10/791,792
Filed: March 4, 2004
Attorney Docket No. ZE030US

: DECISION ON PETITION
: UNDER 37 CFR 1.78(a)(3)

This is a decision on the petition under 37 CFR 1.78(a)(3), filed March 12, 2008, to accept an unintentionally delayed claim under 35 U.S.C. § 120 for the benefit of priority to the prior-filed nonprovisional applications set forth in the amendment filed with the petition.

The petition is **GRANTED**.

A petition for acceptance of a claim for late priority under 37 CFR 1.78(a)(3) is only applicable to those applications filed on or after November 29, 2000. Further, the petition is appropriate only after the expiration of the period specified in 37 CFR 1.78(a)(2)(ii). In addition, the petition under 37 CFR 1.78(a)(3) must be accompanied by:

(1) the reference required by 35 U.S.C. § 120 and 37 CFR 1.78(a)(2)(i) of the prior-filed application, unless previously submitted;
(2) the surcharge set forth in § 1.17(t); and
(3) a statement that the entire delay between the date the claim was due under 37 CFR 1.78(a)(2)(ii) and the date the claim was filed was unintentional. The Director may require additional information where there is a question whether the delay was unintentional.

All of the above requirements having been satisfied, the late claim for priority under 35 U.S.C. § 120 is accepted as being unintentionally delayed.

The granting of the petition to accept the delayed benefit claim to the prior-filed applications under 37 CFR 1.78(a)(3) should not be construed as meaning that this application is entitled to the benefit of the prior-filed applications. In order for this application to be entitled to the benefit of the prior-filed applications, all other requirements under 35 U.S.C. § 120 and 37 CFR 1.78(a)(1) and (a)(2) must be met. Similarly, the fact that the corrected Filing Receipt accompanying this decision on petition includes the prior-filed applications should not be construed as meaning that applicant is entitled to the claim for benefit of priority to the prior-

filed applications noted thereon. Accordingly, the examiner will, in due course, consider this benefit claim and determine whether the application is entitled to the benefit of the earlier filing date.

A corrected Filing Receipt, which includes the priority claim to the prior-filed nonprovisional applications, accompanies this decision on petition.

Any inquiries concerning this decision may be directed to Petitions Attorney Alesia M. Brown at (571) 272-3205. All other inquiries concerning either the examination procedures or status of the application should be directed to the Technology Center.

This application is being forwarded to Technology Center Art Unit 2134 for consideration by the examiner of applicant's entitlement to claim benefit of priority under 35 U.S.C. § 120 to the prior-filed applications.

Anthony Knight
Supervisor
Office of Petitions

ATTACHMENT: Corrected Filing Receipt

UNITED STATES PATENT AND TRADEMARK OFFICE

UNITED STATES DEPARTMENT OF COMMERCE
United States Patent and Trademark Office
Address: COMMISSIONER FOR PATENTS
P.O. Box 1450
Alexandria, Virginia 22313-1450
www.uspto.gov

APPLICATION NUMBER	FILING or 371(c) DATE	GRP ART UNIT	FIL FEE REC'D	ATTY.DOCKET.NO	TOT CLAIMS	IND CLAIMS
10/791,792	03/04/2004	2134	770	ZE030US	7	2

CONFIRMATION NO. 5738

CORRECTED FILING RECEIPT

24011
SILVERBROOK RESEARCH PTY LTD
393 DARLING STREET
BALMAIN, 2041
AUSTRALIA

Date Mailed: 09/26/2008

Receipt is acknowledged of this non-provisional patent application. The application will be taken up for examination in due course. Applicant will be notified as to the results of the examination. Any correspondence concerning the application must include the following identification information: the U.S. APPLICATION NUMBER, FILING DATE, NAME OF APPLICANT, and TITLE OF INVENTION. Fees transmitted by check or draft are subject to collection. Please verify the accuracy of the data presented on this receipt. **If an error is noted on this Filing Receipt, please submit a written request for a Filing Receipt Correction. Please provide a copy of this Filing Receipt with the changes noted thereon. If you received a "Notice to File Missing Parts" for this application, please submit any corrections to this Filing Receipt with your reply to the Notice. When the USPTO processes the reply to the Notice, the USPTO will generate another Filing Receipt incorporating the requested corrections**

Applicant(s)

Kia Silverbrook, Balmain, AUSTRALIA;

Power of Attorney: None

Domestic Priority data as claimed by applicant

This application is a CON of 09/516,874 03/02/2000 PAT 6,745,331
which is a CON of 09/113,223 07/10/1998 PAT 6,442,525

Foreign Applications

AUSTRALIA PO7991 07/15/1997
AUSTRALIA PO 7991 07/15/1997

If Required, Foreign Filing License Granted: 05/20/2004

The country code and number of your priority application, to be used for filing abroad under the Paris Convention, is **US 10/791,792**

Projected Publication Date: Not Applicable

Non-Publication Request: No

Early Publication Request: No

Title

Integrated circuit for the authentication of a consumable storage device

Preliminary Class

713

PROTECTING YOUR INVENTION OUTSIDE THE UNITED STATES

Since the rights granted by a U.S. patent extend only throughout the territory of the United States and have no effect in a foreign country, an inventor who wishes patent protection in another country must apply for a patent in a specific country or in regional patent offices. Applicants may wish to consider the filing of an international application under the Patent Cooperation Treaty (PCT). An international (PCT) application generally has the same effect as a regular national patent application in each PCT-member country. The PCT process **simplifies** the filing of patent applications on the same invention in member countries, but **does not result** in a grant of "an international patent" and does not eliminate the need of applicants to file additional documents and fees in countries where patent protection is desired.

Almost every country has its own patent law, and a person desiring a patent in a particular country must make an application for patent in that country in accordance with its particular laws. Since the laws of many countries differ in various respects from the patent law of the United States, applicants are advised to seek guidance from specific foreign countries to ensure that patent rights are not lost prematurely.

Applicants also are advised that in the case of inventions made in the United States, the Director of the USPTO must issue a license before applicants can apply for a patent in a foreign country. The filing of a U.S. patent application serves as a request for a foreign filing license. The application's filing receipt contains further information and guidance as to the status of applicant's license for foreign filing.

Applicants may wish to consult the USPTO booklet, "General Information Concerning Patents" (specifically, the section entitled "Treaties and Foreign Patents") for more information on timeframes and deadlines for filing foreign patent applications. The guide is available either by contacting the USPTO Contact Center at 800-786-9199, or it can be viewed on the USPTO website at http://www.uspto.gov/web/offices/pac/doc/general/index.html.

For information on preventing theft of your intellectual property (patents, trademarks and copyrights), you may wish to consult the U.S. Government website, http://www.stopfakes.gov. Part of a Department of Commerce initiative, this website includes self-help "toolkits" giving innovators guidance on how to protect intellectual property in specific countries such as China, Korea and Mexico. For questions regarding patent enforcement issues, applicants may call the U.S. Government hotline at 1-866-999-HALT (1-866-999-4158).

LICENSE FOR FOREIGN FILING UNDER

Title 35, United States Code, Section 184

Title 37, Code of Federal Regulations, 5.11 & 5.15

GRANTED

The applicant has been granted a license under 35 U.S.C. 184, if the phrase "IF REQUIRED, FOREIGN FILING LICENSE GRANTED" followed by a date appears on this form. Such licenses are issued in all applications where the conditions for issuance of a license have been met, regardless of whether or not a license may be required as

set forth in 37 CFR 5.15. The scope and limitations of this license are set forth in 37 CFR 5.15(a) unless an earlier license has been issued under 37 CFR 5.15(b). The license is subject to revocation upon written notification. The date indicated is the effective date of the license, unless an earlier license of similar scope has been granted under 37 CFR 5.13 or 5.14.

This license is to be retained by the licensee and may be used at any time on or after the effective date thereof unless it is revoked. This license is automatically transferred to any related applications(s) filed under 37 CFR 1.53(d). This license is not retroactive.

The grant of a license does not in any way lessen the responsibility of a licensee for the security of the subject matter as imposed by any Government contract or the provisions of existing laws relating to espionage and the national security or the export of technical data. Licensees should apprise themselves of current regulations especially with respect to certain countries, of other agencies, particularly the Office of Defense Trade Controls, Department of State (with respect to Arms, Munitions and Implements of War (22 CFR 121-128)); the Bureau of Industry and Security, Department of Commerce (15 CFR parts 730-774); the Office of Foreign AssetsControl, Department of Treasury (31 CFR Parts 500+) and the Department of Energy.

NOT GRANTED

No license under 35 U.S.C. 184 has been granted at this time, if the phrase "IF REQUIRED, FOREIGN FILING LICENSE GRANTED" DOES NOT appear on this form. Applicant may still petition for a license under 37 CFR 5.12, if a license is desired before the expiration of 6 months from the filing date of the application. If 6 months has lapsed from the filing date of this application and the licensee has not received any indication of a secrecy order under 35 U.S.C. 181, the licensee may foreign file the application pursuant to 37 CFR 5.15(b).

UNITED STATES PATENT AND TRADEMARK OFFICE

Commissioner for Patents
United States Patent and Trademark Office
P.O. Box 1450
Alexandria, VA 22313-1450
www.uspto.gov

SILVERBROOK RESEARCH PTY LTD
393 DARLING STREET
BALMAIN 2041 AU AUSTRALIA

COPY MAILED

APR 3 0 2009

OFFICE OF PETITIONS

In re Application of	:	
Kia Silverbrook	:	
Application No. 10/791,792	:	ON PETITION
Filed: March 4, 2004	:	
Attorney Docket No. ZE030US	:	

This is a decision on the petition under the unintentional provisions of 37 CFR 1.137(b), filed March 4, 2009, to revive the above-identified application.

The petition is **GRANTED**.

The application became abandoned for failure to timely file a reply within the meaning of 37 CFR 1.113 to the final Office action of January 22, 2008. The proposed reply required for consideration of a petition to revive must be a Notice of Appeal (and appeal fee required by 37 CFR 41.20(b)(2), an amendment that *prima facie* places the application in condition for allowance, a Request for Continued Examination and submission (37 CFR 1.114), or the filing of a continuing application under 37 CFR 1.53(b). See MPEP 711.03(c)(III)(A)(2). No extensions of time pursuant to the provisions of 37 CFR 1.136(a) were obtained. Accordingly, the date of abandonment of this application is April 23, 2008. The Notice of Abandonment was mailed January 13, 2009.

The petition satisfies the requirements of 37 CFR 1.137(b) in that petitioner has supplied (1) the reply in the form of a Request for Continued Examination (RCE) and fee of $810, and the submission required by 37 CFR 1.114; (2) the petition fee of $1,620; and (3) a proper statement of unintentional delay.

Telephone inquiries concerning this decision should be directed to Terri Williams at (571) 272-2991.

This application is being referred to Technology Center AU 2434 for processing of the RCE and for appropriate action by the Examiner in the normal course of business on the amendment submitted in accordance with 37 CFR 1.114.

Chris Bottorff
Petitions Examiner
Office of Petitions

UNITED STATES PATENT AND TRADEMARK OFFICE

COMMISSIONER FOR PATENTS
UNITED STATES PATENT AND TRADEMARK OFFICE
P.O. BOX 1450
ALEXANDRIA, VA 22313-1450
www.uspto.gov

BIRCH STEWART KOLASCH & BIRCH
PO BOX 747
FALLS CHURCH, VA 22040-0747

COPY MAILED

MAR 0 1 2006

OFFICE OF PETITIONS

In re Patent of	:	
Liao et al.	:	
Application No. 10/791,819	:	DECISION
Filed: March 4, 2004	:	ON PETITION
Title of Invention:	:	
SUBSTRATE HAVING INSULATING	:	
LAYERS TO PREVENT IT FROM	:	
WARPING	:	

This is a decision on the Petition to Revive Unintentionally Abandoned Application under 37 CFR 1.137(b), filed December 12, 2005.

The petition is **dismissed**.

Any further petition to revive the above-identified application must be submitted within TWO (2) MONTHS from the mail date of this decision. Extensions of time under 37 CFR 1.136(a) are permitted. The reconsideration request should include a cover letter entitled "Renewed Petition under 37 CFR 1.137." This is **not** final agency action within the meaning of 5 U.S.C. § 704.

The above-identified application became abandoned for failure to timely and properly reply to the final Office action, mailed May 24, 2005. The Office action set a three (3) month period for reply. No extensions of time having been obtained under 37 CFR 1.136(a), this application became abandoned on August 25, 2005. A Notice of Abandonment was mailed on November 30, 2005.

Applicant files the instant petition and extension of time request, and in the petition asserts that the reply filed with the petition constitutes a Continuition-in-Part application; however, no continuity with the above-identified application has been recorded in the Office, and no continuing application has

been located among the papers filed with the petition on December 12, 2005[1].

A grantable petition to revive an abandoned application under 37 CFR 1.137(b) must be accompanied by: (**1**) the required reply (unless previously filed); (**2**) the petition fee required by 37 CFR 1.17(m); (**3**) a statement that the entire delay in filing the required reply from the due date for the reply until the filing of a grantable petition pursuant to 37 CFR 1.137(b) was unintentional; and (**4**) if required, a terminal disclaimer (and fee as set forth in 37 CFR 1.20(d)). Applicant lacks item (**1**).

As to item (1), Applicant has not submitted a reply to the May 20, 2004 Office action. Applicant must respond to the Office action.

The extension of time fee has been refunded to deposit account 02-2448 as authorized in the petition for extension of time.

Further correspondence with respect to this matter should be addressed as follows:

By mail: Commissioner for Patents
PO Box 1450
Alexandria, VA 22313-1450

By FAX: (571) 273-8300
Attn: Office of Petitions

By hand: Customer Service Window
Randolph Building
401 Dulany Street
Alexandria, VA 22314

Telephone inquiries concerning this matter should be directed to the undersigned at (571) 272-3232.

Derek L. Woods
Petitions Attorney
Office of Petitions

---

[1] Office records indicate that applicant filed a three month extension of time request and paid $1020.00 with the instant petition. Applicant is advised that an extension of time is only available where the period for reply to the Office communication has not expired. Here, the period for reply has expired and the application is abandoned, as such, extensions of time are no longer available.

UNITED STATES PATENT AND TRADEMARK OFFICE

COMMISSIONER FOR PATENTS
UNITED STATES PATENT AND TRADEMARK OFFICE
P.O. BOX 1450
ALEXANDRIA, VA 22313-1450
www.uspto.gov

BIRCH STEWART KOLASCH & BIRCH
PO BOX 747
FALLS CHURCH, VA 22040-0747

COPY MAILED
JUN 0 2 2006
OFFICE OF PETITIONS

In re Patent of	:	
Liao et al.	:	
Application No. 10/791,819	:	DECISION
Filed: March 4, 2004	:	ON PETITION
Title of Invention:	:	
SUBSTRATE HAVING INSULATING	:	
LAYERS TO PREVENT IT FROM	:	
WARPING	:	

This is a decision on the Renewed Petition for Revival of Application for Patent Abandoned Unintentionally Under 37 CFR 1.137(b), filed May 1, 2005.

The above-identified application became abandoned for failure to timely and properly reply to the final Office action, mailed May 24, 2005. The Office action set a three (3) month period for reply. No extensions of time having been obtained under 37 CFR 1.136(a), this application became abandoned on August 25, 2005. A Notice of Abandonment was mailed on November 30, 2005.

Applicant files the instant petition and continuation application.

Having found that all requirements for the filing of a grantable petition under 37 C.F.R. §1.137(b) have been met, this Petition is hereby **Granted**.

This application is being revived for purposes of continuity only and since continuity has been established by this decision reviving the application, the application is again abandoned in favor of the Continuation-in-Part Application, No. 11/285,306, filed November 23, 2005.

Office records indicate that applicant has again filed a three (3) month extension of time request and paid $1020.00 with the instant petition. Applicant is again advised that an extension of time is only available where the period for reply to the

Office communication has not expired. Here, the period for reply has expired and the application is abandoned, as such, extensions of time are no longer available.

This application is being forwarded to the files repository.

Telephone inquiries concerning this matter should be directed to the undersigned at 571-272-3232.

Derek L. Woods
Attorney
Office of Petitions

UNITED STATES PATENT AND TRADEMARK OFFICE

Commissioner for Patents
United States Patent and Trademark Office
P.O. Box 1450
Alexandria, VA 22313-1450
www.uspto.gov

OBLON SPIVAK MCCLELLAND
MAIER & NEUSTADT, P.C.
1940 DUKE STREET
ALEXANDRIA, VA 22314

COPY MAILED

JUN 30 2006

OFFICE OF PETITIONS

In re Application of :
Takahiro Inoue :
Application No. 10/791,825 : ON PETITION
Filed: March 4, 2004 :
Attorney Docket No. 249945US2

This is a decision on the petition filed, June 29, 2006 under 37 CFR 1.313(c)(2) to withdraw the above-identified application from issue after payment of the issue fee.

The petition is **GRANTED**.

The above-identified application is withdrawn from issue for consideration of a submission under 37 CFR 1.114 (request for continued examination). See 37 CFR 1.313(c)(2).

Petitioner is advised that the issue fee paid on June 8, 2006 in the above-identified application cannot be refunded. If, however, the above-identified application is again allowed, petitioner may request that it be applied towards the issue fee required by the new Notice of Allowance.[1]

Telephone inquiries should be directed to Irvin Dingle at (571) 272-3210.

This matter is being referred to Technology Center AU 2816 for processing of the request for continued examination under 37 CFR 1.114 and for consideration of the concurrently filed Information Disclosure Statement.

Irvin Dingle
Petitions Examiner
Office of Petitions

[1] The request to apply the issue fee to the new Notice may be satisfied by completing and returning the new Issue Fee Transmittal Form PTOL-85(b), which includes the following language thereon: Commissioner for Patents is requested to apply the Issue Fee and Publication Fee (if any) or re-apply any previously paid issue fee to the application identified above. Petitioner is advised that, whether a fee is indicated as being due or not, the Issue Fee Transmittal Form **must** be completed and timely submitted to avoid abandonment. Note the language in bold text on the first page of the Notice of Allowance and Fee(s) Due (PTOL-85).

UNITED STATES PATENT AND TRADEMARK OFFICE

COMMISSIONER FOR PATENTS
UNITED STATES PATENT AND TRADEMARK OFFICE
P.O. BOX 1450
ALEXANDRIA, VA 22313-1450
www.uspto.gov

RENNER KENNER GREIVE BOBAK TAYLOR & WEBER
FIRST NATIONAL TOWER FOURTH FLOOR
106 S. MAIN STREET
AKRON OH 44308

COPY MAILED

JUN 16 2008

In re Application of	:	
Arachequesne	:	DECISION ON PETITION
Application No. 10/791,827	:	
Filed: March 4, 2004	:	
Docket No.: P24953	:	

This is a decision on the petition to withdraw the holding of abandonment under 37 CFR 1.181, filed March 31, 2008.

This application was held abandoned for failure to timely submit a proper reply to the final Office action mailed September 11, 2007. Notice of Abandonment was mailed March 25, 2008.

Petitioners assert that a response to the final Office action in the form of a Notice of Appeal was submitted on March 10, 2008 and have provided as proof of mailing and proof of USPTO receipt a return postcard dated March 14, 2008 acknowledging receipt of the reply.

The original response filed March 14, 2008 has been located in the application file.

In view of the evidence thereof, the petition to withdraw the holding of abandonment is hereby **GRANTED**.

The Notice of Abandonment is hereby **VACATED** and the holding of abandonment is **WITHDRAWN**.

The two-month period for filing an appeal brief under 37 CFR 41.37 (accompanied by the fee required by 37 CFR 41.20(b)(2)), runs from the date of this decision.

The application file is being forwarded to the Technology Center 3600 for further processing.

Telephone inquiries concerning this matter may be directed to the undersigned at (571) 272-3205.

Alesia M. Brown
Petitions Attorney
Office of Petitions

SPE: D. Gutierrez

SPE RESPONSE FOR CERTIFICATE OF CORRECTION

Paper No.: _____

DATE : 7/27/06

TO SPE OF : ART UNIT 2859

SUBJECT : Request for Certificate of Correction for Appl. No.: 10/794,837 Patent No.: 6993268

Please respond to this request for a certificate of correction within 7 days.

Please review the requested changes/corrections as shown in the **COCIN** document(s) in the IFW application image. No new matter should be introduced, nor should the scope or meaning of the claims be changed.

Please complete the response (see below) and forward the completed response to scanning using document code **COCX**.

Lamonte M. Newsome
Certificates of Correction Branch
703-308-9390 ext. 112

Thank You For Your Assistance

The request for issuing the above-identified correction(s) is hereby:

Note your decision on the appropriate box.

- ☑ **Approved** — All changes apply.
- ☐ **Approved in Part** — Specify below which changes **do not** apply.
- ☐ **Denied** — State the reasons for denial below.

Comments: Changes editorial do not affect the scope of the patent granted. (LMA) 8/1/06

_____ 2859

SPE **Art Unit**

UNITED STATES PATENT AND TRADEMARK OFFICE

Commissioner for Patents
United States Patent and Trademark Office
P.O. Box 1450
Alexandria, VA 22313-1450
www.uspto.gov

COPY MAILED

AUG 2 2 2006

OFFICE OF PETITIONS

VENABLE LLP
P.O. BOX 34385
WASHINGTON, DC 20045-9998

In re Application of :
Kanaris :
Application No. 10/791, 847 : DECISION ON PETITION
Filed: March 4, 2004 : TO WITHDRAW
Attorney Docket No. 41066-201700 : FROM RECORD
:

This is a decision on the Request to Withdraw as attorney or agent of record under 37 C.F.R. § 1.36(b), filed April 24, 2006.

The request is **DISMISSED.**

A grantable request to withdraw as attorney/agent of record must be signed by every attorney/agent seeking to withdraw or contain a clear indication that one attorney is signing on behalf of another/others. A request to withdraw will not be approved unless at least 30 (thirty) days would remain between the date of approval and the later of the expiration date of a time to file a response or the expiration date of the maximum time period which can be extended under 37 C.F.R. § 1.136(a).

The Office cannot approve the request at this time since the reasons provided do not meet any of the conditions under the mandatory or permissive categories enumerated in 37 CFR 10.40. Section 10.40 of Title 37 of the Code of Federal Regulation states, "[a] practitioner shall not withdraw from employment in a proceeding before the Office without permission from the Office[.]" More specifically, 37 CFR 10.40 states, "[i]f paragraph (b) of this section is not applicable, a practitioner may not request permission to withdraw in matter pending before the Office unless such request or such withdrawal is" for one the permissive reasons listed in 37 CFR 10.40(c). The reasons set forth in the request, "other representation is being used by patent owner", does not meet any the conditions set forth in 37 CFR 10.40.

In order to request or take action in a patent matter, the assignee must establish its ownership of the patent to the satisfaction of the Director. In this regard, a Statement under 37 CFR 3.73(b) must have either: (i) documentary evidence of a chain of title from the original owner to the assignee (*e.g.*, copy of an executed assignment), and a statement affirming that the documentary evidence of the chain of title from the original owner to the assignee was or concurrently is being

submitted for recordation pursuant to § 3.11; or (ii) a statement specifying where documentary evidence of a chain of title from the original owner to the assignee is recorded in the assignment records of the Office (*e.g.*, reel and frame number).

There is an outstanding Office action that was mailed July 31, 2006 that requires a response by the applicant.

All future communications from the Office will continue to be directed to the above-listed address until otherwise notified by applicant.

Telephone inquiries concerning this decision should be directed to April Wise at 571-272-1642.

April M. Wise
Petitions Examiner
Office of Petitions

cc: Eugene Gierczak
Miller Thompson, LLP
Scotia Plaza, PO BOX 1011
40 King Street West, Suite 5800
Toronto, Ontario M5H 3S1
Canada

UNITED STATES PATENT AND TRADEMARK OFFICE

Commissioner for Patents
United States Patent and Trademark Office
P.O. Box 1450
Alexandria, VA 22313-1450
www.uspto.gov

VENABLE LLP
P.O. BOX 34385
WASHINGTON DC 20043-9998

COPY MAILED

FEB 06 2008

OFFICE OF PETITIONS

In re Application of	:	
Alexander Kanaris	:	
Application No. 10/791,847	:	DECISION GRANTING PETITION
Filed: March 4, 2004	:	UNDER 37 CFR 1.137(b)
Attorney Docket No. 41066-201700	:	

This is a decision on the petition under 37 CFR 1.137(b), filed July 23, 2007, to revive the above-identified application.

The petition is **GRANTED**.

The petition satisfies the conditions for revival pursuant to the provisions of 37 CFR 1.137(b) in that (1) the reply in the form of an RCE and an amendment; (2) the petition fee; and (3) the required statement of unintentional delay have been received. Accordingly, the reply to the Final Rejection of July 31, 2006, is accepted as having been unintentionally delayed.

Telephone inquiries concerning this decision should be directed to the undersigned at (571) 272-3208.

This matter is being referred to Technology Center AU 3651.

Karen Creasy

Karen Creasy
Petitions Examiner
Office of Petitions

cc:

HOFFMANN & BARON, LLP
6900 JERICHO TURNPIKE
SYOSSET, NY 11791

UNITED STATES PATENT AND TRADEMARK OFFICE

UNITED STATES DEPARTMENT OF COMMERCE
United States Patent and Trademark Office
Address: COMMISSIONER FOR PATENTS
P.O. Box 1450
Alexandria, Virginia 22313-1450
www.uspto.gov

APPLICATION NUMBER	FILING OR 371(C) DATE	FIRST NAMED APPLICANT	ATTY. DOCKET NO./TITLE
10/791,847	03/04/2004	Alexander Kanaris	41066-201700

CONFIRMATION NO. 3857

26694
VENABLE LLP
P.O. BOX 34385
WASHINGTON, DC 20043-9998

IMPROPER CPOA LETTER

Date Mailed: 02/05/2008

NOTICE REGARDING POWER OF ATTORNEY

This is in response to the Power of Attorney filed 07/23/2007. The Power of Attorney in this application is not accepted for the reason(s) listed below:

- The Power of Attorney is from an assignee and the Certificate required by 37 CFR 3.73(b) has not been received.

/kocreasy/

Office of Initial Patent Examination (571) 272-4000 or 1-800-PTO-9199

UNITED STATES PATENT AND TRADEMARK OFFICE

UNITED STATES DEPARTMENT OF COMMERCE
United States Patent and Trademark Office
Address: COMMISSIONER FOR PATENTS
P.O. Box 1450
Alexandria, Virginia 22313-1450
www.uspto.gov

APPLICATION NO.	FILING DATE	FIRST NAMED INVENTOR	ATTORNEY DOCKET NO.	CONFIRMATION NO.
10/791,854	03/04/2004	Su-Jin Han	P57016	5248

8439 7590 02/23/2009

ROBERT E. BUSHNELL & LAW FIRM
2029 K STREET NW
SUITE 600
WASHINGTON, DC 20006-1004

EXAMINER	
TURNER, KATHERINE ANN	

ART UNIT	PAPER NUMBER
1795	

MAIL DATE	DELIVERY MODE
02/23/2009	PAPER

Please find below and/or attached an Office communication concerning this application or proceeding.

The time period for reply, if any, is set in the attached communication.

UNITED STATES PATENT AND TRADEMARK OFFICE

Commissioner for Patents
United States Patent and Trademark Office
P.O. Box 1450
Alexandria, VA 22313-1450
www.uspto.gov

caf

Mailed : 2/23/09
In re Application of
SU-JIN HAN et al.
Serial No. 10/791,854
Filed: March 4, 2004
For: SECONDARY BATTERY

DECISION ON PETITION

This is a decision on the PETITION UNDER 37 CFR §1.144 filed September 8, 2008.

On February 11, 2008, a restriction requirement was mailed. The restriction requirement set forth three groups of species and directed applicant to elect one species from each group. Applicants traversed the restriction requirement in a response filed October 27, 2006 and elected only from group I. A supplemental election was submitted on April 25, 2008. In the supplemental election applicants elected a species from group II and Group III also. On July 8, 2008 a non-final action was mailed wherein the restriction requirement was made final.

On September 8, 2008, the instant petition under 37 CFR §1.144 was filed to formally request the withdrawal of the restriction requirement.

Applicant's position for the withdrawal of the restriction requirement is that an additional search of the non-elected claims would not impose a serious burden.

DECISION

Petitioner states that the examiner has failed to show any type of burden, much less a serious burden, in the restriction requirement, and thus the examiner must examine the entire application. Petitioner argues that the subject matter of the six species overlap and the mandatory fields of search for the six embodiments are coextensive. These arguments are persuasive. Although the examiner's requirement for restriction alleges an examination and search burden a strong case for such has not been established.

Petitioner states that the examiner's search for generic claim 1 proves that the examiner has performed a search without any burden. Although this is not necessarily true in all cases, a review of the record indicates that examination of the recited species would not impose a serious burden.

Accordingly, the petition to withdraw the restriction requirement is **GRANTED**.

/JACQUELINE STONE/

Jacqueline M. Stone, Director
Technology Center 1700
Chemical and Materials Engineering

Robert E. Bushnell
Suite 300
1522 K Street, N.W.
Washington DC 20005

UNITED STATES PATENT AND TRADEMARK OFFICE

UNITED STATES DEPARTMENT OF COMMERCE
United States Patent and Trademark Office
Address: COMMISSIONER FOR PATENTS
P.O. Box 1450
Alexandria, Virginia 22313-1450
www.uspto.gov

ROBERT E. BUSHNELL & LAW FIRM
2029 K STREET NW
SUITE 600
WASHINGTON, DC 20006-1004

Mail Date: 04/20/2010

Applicant	: Su-Jin Han	: DECISION ON REQUEST FOR
Patent Number	: 7662511	: RECALCULATION of PATENT
Issue Date	: 02/16/2010	: TERM ADJUSTMENT IN VIEW
Appliction No	: 10/791,854	: OF WYETH AND NOTICE OF INTENT TO
Filed	: 03/04/2004	: ISSUE CERTIFICATE OF CORRECTION
		:

The Request for Recalculation is **GRANTED** to the extent indicated.

The patent term adjustment has been determined to be **1704** days. The USPTO will *sua sponte* issue a certificate of correction reflecting the amount of PTA days determined by the recalculation.

Prior to the issuance of the certificate of correction, the USPTO will afford patentee an opportunity to be heard and request reconsideration. Accordingly, patentee has **one month or thirty (30) days**, whichever is longer, to file a request for reconsideration of this patent term adjustment calculation. See 35 U.S.C. 154(b)(3)(B)(ii) and 37 CFR 1.322(a)(4). No extensions of time will be granted under 37 CFR 1.136.

Patentee should use document code PET.OP if electronically filing a request for reconsideration of this patent term adjustment calculation. The patentee must also include the information required by 37 CFR 1.705(b)(2) and the fee required by 37 CFR 1.18(e). If patentee does not file a timely request for reconsideration of this patent term adjustment calculation including the information required by 37 CFR 1.705(b)(2) and the fee required by 37 CFR 1.18(e), the USPTO will issue a certificate of correction reflecting the PTA determination noted above.

Patentee should be aware that in order to preserve the right to review in the United States District Court for the District of Columbia of the USPTO patent term adjustment determination, patentee must ensure that he or she also take the steps required under 35 U.S.C. 154(b)(4)(A) in a timely manner. Nothing in the request for recalculation should be construed as providing an alternative time frame for commencing a civil action under 35 U.S.C. 154(b)(4)(A).

Any questions concerning this decision should be directed to the Office of Patent Legal Administration at 571-272-7702.

UNITED STATES PATENT AND TRADEMARK OFFICE

Commissioner for Patents
United States Patent and Trademark Office
P.O. Box 1450
Alexandria, VA 22313-1450
www.uspto.gov

THE LAW OFFICES OF MIKIO ISHIMARU
333 W. EL CAMINO REAL, SUITE 330
SUNNYVALE, CA 94087

COPY MAILED
OCT 0 5 2006
OFFICE OF PETITIONS

In re Patent No. 6,980,163 :
Issue Date: December 27, 2005 :
Application No. 10/791,888 : NOTICE
Filed: March 4, 2004 :
Patentee(s): Gerard Terreault, et. al. :

This is a notice regarding your request for acceptance of a fee deficiency submission under 37 CFR 1.28, filed September 1, 2006. On September 1, 1998, the Court of Appeals for the Federal Circuit held that 37 CFR 1.28(c) is the sole provision governing the time for correction of the erroneous payment of the issue fee as a small entity. **See DH Technology v. Synergystex International, Inc. 154 F.3d 1333, 47 USPQ2d 1865 (Fed. Cir. Sept. 1, 1998).**

The Office no longer investigates or rejects original or reissue applications under 37 CFR 1.56. **1098 Off. Gaz. Pat. Office 502 (January 3, 1989)**. Therefore, nothing in this Notice is intended to imply that an investigation was done.

Your fee deficiency submission under 37 CFR 1.28 is hereby **ACCEPTED**. Therefore, status as a small entity has been removed and all future fees paid must be paid at the large entity rate.

Inquiries related to this communication should be directed to the undersigned at (571) 272-3226.

Andrea Smith
Petitions Examiner
Office of Petitions

UNITED STATES PATENT AND TRADEMARK OFFICE

Commissioner for Patents
United States Patent and Trademark Office
P.O. Box 1450
Alexandria, VA 22313-1450
www.uspto.gov

SHLESINGER ARKWRIGHT & GARVEY LLP
1420 KING STREET, SUITE 600
ALEXANDRIA, VA 22314

COPY MAILED
JUL 0 3 2006
OFFICE OF PETITIONS

In re Application of :
Christian Keller et al :
Application No. 10/791,895 : DECISION ON PETITION
Filed: March 4, 2004 : TO MAKE SPECIAL UNDER
Attorney Docket No. 7346 : 37 CFR 1.102(d)
:

This is a decision on the petition under 37 CFR 1.102(d), filed May 3, 2006, to make the above-identified application special based on prospective manufacture as set forth in M.P.E.P. § 708.02, Section I.

The petition is **GRANTED**.

A grantable petition to make an application special under 37 CFR 1.102(d), MPEP § 708.02, Section I: Manufacture, must be accompanied by the required fee pursuant to 37 CFR 1.17(h) and a statement by the applicant, assignee, or attorney/agent registered to practice before the Office alleging:

> (A) The possession by the prospective manufacturer of sufficient presently available capital (stating approximately the amount) and facilities (stating briefly the nature thereof) to manufacture the invention in quantity or that sufficient capital and facilities will be made available if a patent is granted; If the prospective manufacturer is an individual, there must be a corroborating statement from some responsible party, as for example, an officer of a bank, showing that said individual has the required available capital to manufacture;
>
> (B) That the prospective manufacturer will not manufacture, or will not increase present manufacture, unless certain that the patent will be granted;
>
> (C) That the prospective manufacturer obligates himself, herself or itself, to manufacture the invention, in the United States or its possessions, in quantity immediately upon the allowance of claims or issuance of a patent which will protect the investment of capital and facilities; and

(D) That the applicant or assignee has made or caused to be made a careful and thorough search of the prior art, or has a good knowledge of the pertinent prior art.

Additionally, Applicant must provide one copy of each of the references deemed most closely related to the subject matter encompassed by the claims if said references are not already of record.

The petition meets the requirements set above. Accordingly, the above-identified application has been accorded "special" status.

Telephone inquiries concerning this decision should be directed to Irvin Dingle at 571-272-3210.

All other inquiries concerning either the examination or status of the application should be directed to the Technology Center.

The application is being forwarded to the Technology Center Art Unit 3763 for action on the merits commensurate with this decision.

for Denise Pothier
Petitions Examiner
Office of Petitions

UNITED STATES PATENT AND TRADEMARK OFFICE

COMMISSIONER FOR PATENTS
UNITED STATES PATENT AND TRADEMARK OFFICE
P.O. BOX 1450
ALEXANDRIA, VA 22313-1450
www.uspto.gov

Norris, McLaughlin & Marcus P.A.
30th Floor
220 East 42nd Street
New York, NY 10017

COPY MAILED

AUG 2 4 2004

OFFICE OF PETITIONS

In re Application of :
Carrascal, et al. : DECISION REFUSING STATUS
Application No. 10/791,920 : UNDER 37 CFR 1.47(a)
Filed: March 2, 2004 :
Atty. Dkt. No.: 101216-39 :
For: COMPOSITION FOR DYEING :
HUMAN HAIR :

This decision is in response to the petition under 37 CFR 1.47(a), filed July 21, 2004.

The petition under 37 CFR 1.47(a) is **DISMISSED**.

Rule 47 applicant is given TWO MONTHS from the mailing date of this decision to reply, correcting the below-noted deficiencies. Any reply should be entitled "Request for Reconsideration of Petition Under 37 CFR 1.47(a)," and should only address the deficiencies noted below, except that the reply may include an oath or declaration executed by the non-signing inventor. Failure to respond will result in abandonment of the application. Any extensions of time will be governed by 37 CFR 1.136(a).

The provisions of 37 CFR 1.33(b) state "[a]mendments and other papers, except for written assertions pursuant to § 1.27(c)(2)(ii) of this part, filed in the application must be signed by: (1) A registered attorney or agent of record appointed in compliance with § 1.34(b); (2) A registered attorney or agent not of record who acts in a representative capacity under the provisions of § 1.34(a); (3) An assignee as provided for under § 3.71(b) of this chapter; or (4) All of the applicants (§ 1.41(b)) for patent, unless there is an assignee of the entire interest and such assignee has taken action in the application in accordance with § 3.71 of this chapter."

The instant petition under 37 CFR 1.47(a) is improperly signed by M. Grit whom Office records reveal is not a registered practitioner. Accordingly, the petition has not been examined on

the merits. Any renewed petition must be properly signed in accordance with the provisions set forth under 37 CFR 1.33.

The required surcharge has been charged to deposit account No. 14-1263.

Further correspondence with respect to this matter should be addressed as follows:

By mail:	Mail Stop Petition Commissioner for Patents P.O. Box 1450 Alexandria, VA 22313-1450
By facsimile:	(703) 872-9306
By hand:	U.S. U.S. Patent and Trademark Office 2011 South Clark Place Customer Window, Mail Stop Petition Crystal Plaza Two, Lobby, Room 1B03 Arlington, VA 22202

Telephone inquiries regarding this decision should be directed to the undersigned at (703) 305-0310. Calls placed after September 27, 2004 may be directed to the undersigned at (571) 272-3205.

Alesia M. Brown
Petitions Attorney
Office of Petitions

UNITED STATES PATENT AND TRADEMARK OFFICE

COMMISSIONER FOR PATENTS
UNITED STATES PATENT AND TRADEMARK OFFICE
P.O. BOX 1450
ALEXANDRIA, VA 22313-1450
www.uspto.gov

Norris, McLaughlin & Marcus P.A.
30th Floor
220 East 42nd Street
New York, NY 10017

COPY MAILED

OCT 2 8 2004

OFFICE OF PETITIONS

In re Application of	:	
Carrascal, et al.	:	DECISION REFUSING STATUS
Application No. 10/791,920	:	UNDER 37 CFR 1.47(a)
Filed: March 2, 2004	:	
Atty. Dkt. No.: 101216-39	:	
For: COMPOSITION FOR DYEING HUMAN HAIR	:	

This decision is in response to the renewed petition under 37 CFR 1.47(a), filed September 21, 2004.

The petition is **DISMISSED**.

Rule 47 applicant is given TWO MONTHS from the mailing date of this decision to reply, correcting the below-noted deficiencies. Any reply should be entitled "Request for Reconsideration of Petition Under 37 CFR 1.47(a)," and should only address the deficiencies noted below, except that the reply may include an oath or declaration executed by the non-signing inventor. Failure to respond will result in abandonment of the application. Any extensions of time will be governed by 37 CFR 1.136(a).

The above-identified application was filed March 2, 2004 without an executed oath or declaration. Accordingly, a Notice to File Missing Parts of Nonprovisional Application was mailed May 21, 2004 requiring an executed oath or declaration and a surcharge.

A grantable petition under 37 CFR 1.47(a) requires: (1) proof that the non-signing inventor cannot be reached or refuses to sign the oath or declaration after having been presented with the application papers (specification, claims and drawings); (2) an acceptable oath or declaration in compliance with 35 U.S.C. §§ 115 and 116; (3) the petition fee; and (4) a statement of the last known address of the non-signing inventor.

The instant petition lacks item (1) set forth above.

Petitioners have failed to establish that joint inventor Isabel Carrascal refuses to sign the declaration after having been presented with the application papers. The petition executed by

Theodore Gottlieb and the statements of Mustafa Grit reference a refusal however neither Gottlieb nor Grit profess to have first hand knowledge of the alleged refusal.

Petitioners' attention is directed to MPEP 409.03(d) wherein it states "[w]here a refusal of the inventor to sign the application papers is alleged, the circumstances of the presentation of the application papers and of the refusal must be specified in a statement of facts by the person who presented the inventor with the application papers and/or to whom the refusal was made. *Statements by a party not present when an oral refusal is made will not be accepted.*" (Emphasis added.)

Any renewed petition must be accompanied by evidence that sufficiently establishes that the inventor received the application papers and thereafter refused to execute the declaration. A statement of facts from the person(s) to whom the refusal was made should accompany any renewed petition. The statement of facts should detail the manner, time, and place that the application papers were presented to the inventor and where an express oral refusal to sign the declaration is alleged, that fact along with the time and place of the refusal must be stated in the statement of facts.

Further correspondence with respect to this matter should be addressed as follows:

By mail:	Mail Stop Petition Commissioner for Patents P.O. Box 1450 Alexandria, VA 22313-1450
By facsimile:	(703) 308-6916
By hand:	U.S. Patent and Trademark Office 2011 South Clark Place Customer Window, Mail Stop Petition Crystal Plaza Two, Lobby, Room 1B03 Arlington, VA 22202

Telephone inquiries regarding this decision should be directed to the undersigned at (571) 272-3205.

Alesia M. Brown
Petitions Attorney
Office of Petitions

UNITED STATES PATENT AND TRADEMARK OFFICE

COMMISSIONER FOR PATENTS
UNITED STATES PATENT AND TRADEMARK OFFICE
P.O. BOX 1450
ALEXANDRIA, VA 22313-1450
www.uspto.gov

Norris, McLaughlin & Marcus P.A.
30th Floor
220 East 42nd Street
New York, NY 10017

COPY MAILED

MAR 0 2 2005

OFFICE OF PETITIONS

In re Application of	:	
Carrascal, et al.	:	DECISION GRANTING
Application No. 10/791,920	:	STATUS UNDER 37 CFR
Filed: March 2, 2004	:	1.47(a)
Atty. Dkt. No.: 101216-39	:	
For: COMPOSITION FOR DYEING	:	
HUMAN HAIR	:	

This decision is in response to the renewed petition under 37 CFR 1.47(a), filed January 5, 2005.

The petition under 37 CFR 1.47(a) is **GRANTED**.

Petitioner has shown that inventor I.V. Carrascal has refused to sign the declaration after having been presented with the application papers.

Thus, the above-identified application and papers have been reviewed and found in compliance with 37 CFR 1.47(a). This application is hereby accorded Rule 1.47(a) status.

As provided in Rule 1.47(c), this Office will forward notice of this application's filing to the non-signing inventor at the address given in the petition. Notice of the filing of this application will also be published in the Official Gazette.

After this decision is mailed, the above-identified application will be returned to the Office of Initial Patent Examination for further processing.

Telephone inquiries regarding this decision should be directed to the undersigned at (571) 272-3205.

Alesia M. Brown
Senior Petitions Attorney
Office of Petitions

UNITED STATES PATENT AND TRADEMARK OFFICE

COMMISSIONER FOR PATENTS
UNITED STATES PATENT AND TRADEMARK OFFICE
P.O. BOX 1450
ALEXANDRIA, VA 22313-1450
www.uspto.gov

Isabel Vega Carrascal
C/Juan de Valladolid 36 4
Valladolid 47014
SPAIN

COPY MAILED

MAR 0 2 2005

OFFICE OF PETITIONS

In re Application of :
Carrascal, et al. :
Application No. 10/791,920 : LETTER
Filed: March 2, 2004 :
Atty. Dkt. No.: 101216-39 :
For: COMPOSITION FOR DYEING HUMAN :
HAIR :

Dear Madam:

You are named as an inventor in the above-identified United States patent application filed under the provisions of 35 U.S.C. 116 (United States Code) and 37 C.F.R. § 1.47(a), Rules of Practice in Patent Cases. Should a patent be granted on the application you will be designated therein as a joint inventor.

As a named inventor you are entitled to inspect any paper in the file wrapper of the application, order copies of all or any part thereof (at a prepaid cost as per 37 C.F.R. § 1.19) or make your position of record in the application. Alternatively, you may arrange to do any of the preceding through a registered patent attorney or agent presenting written authorization from you. If you care to join the application, counsel of record (see below) would presumably assist you. Joining in the application would entail the filing of an appropriate oath or declaration by you pursuant to 37 C.F.R. § 1.63.

Telephone inquiries regarding this communication should be directed to the undersigned at (571) 272-3205. Requests for information regarding your application should be directed to the File Information Unit at (703) 308-2733. Information regarding how to pay for and order a copy of the application, or a specific paper in the application, should be directed to Certification Division at (703) 308-9726 or 1-800-972-6382 (outside the Washington D.C. area).

Telephone inquiries regarding this matter should be directed to the undersigned at (571) 272-3205.

Alesia M. Brown
Petitions Attorney
Office of Petitions

UNITED STATES PATENT AND TRADEMARK OFFICE

UNITED STATES DEPARTMENT OF COMMERCE
United States Patent and Trademark Office
Address: COMMISSIONER FOR PATENTS
P.O. Box 1450
Alexandria, Virginia 22313-1450
www.uspto.gov

XILINX, INC
ATTN: LEGAL DEPARTMENT
2100 LOGIC DR
SAN JOSE, CA 95124

Mail Date: 05/14/2010

Applicant	: Brian T. Brunn	: DECISION ON REQUEST FOR
Patent Number	: 7653127	: RECALCULATION of PATENT
Issue Date	: 01/26/2010	: TERM ADJUSTMENT IN VIEW
Application No	: 10/791,924	: OF WYETH AND NOTICE OF INTENT TO
Filed	: 03/02/2004	: ISSUE CERTIFICATE OF CORRECTION
		:

The Request for Recalculation is **GRANTED** to the extent indicated.

The patent term adjustment has been determined to be **1522** days. The USPTO will *sua sponte* issue a certificate of correction reflecting the amount of PTA days determined by the recalculation.

Prior to the issuance of the certificate of correction, the USPTO will afford patentee an opportunity to be heard and request reconsideration. Accordingly, patentee has **one month or thirty (30) days**, whichever is longer, to file a request for reconsideration of this patent term adjustment calculation. See 35 U.S.C. 154(b)(3)(B)(ii) and 37 CFR 1.322(a)(4). No extensions of time will be granted under 37 CFR 1.136.

Patentee should use document code PET.OP if electronically filing a request for reconsideration of this patent term adjustment calculation. The patentee must also include the information required by 37 CFR 1.705(b)(2) and the fee required by 37 CFR 1.18(e). If patentee does not file a timely request for reconsideration of this patent term adjustment calculation including the information required by 37 CFR 1.705(b)(2) and the fee required by 37 CFR 1.18(e), the USPTO will issue a certificate of correction reflecting the PTA determination noted above.

Patentee should be aware that in order to preserve the right to review in the United States District Court for the District of Columbia of the USPTO patent term adjustment determination, patentee must ensure that he or she also take the steps required under 35 U.S.C. 154(b)(4)(A) in a timely manner. Nothing in the request for recalculation should be construed as providing an alternative time frame for commencing a civil action under 35 U.S.C. 154(b)(4)(A).

Any questions concerning this decision should be directed to the Office of Patent Legal Administration at 571-272-7702.

UNITED STATES PATENT AND TRADEMARK OFFICE

UNITED STATES DEPARTMENT OF COMMERCE
United States Patent and Trademark Office
Address: COMMISSIONER FOR PATENTS
P.O. Box 1450
Alexandria, Virginia 22313-1450
www.uspto.gov

GIFFORD, KRASS, SPRINKLE,ANDERSON & CITKOWSKI, P.C
PO BOX 7021
TROY, MI 48007-7021

Mail Date: 04/21/2010

Applicant	: Warren S. Taranow	: DECISION ON REQUEST FOR
Patent Number	: 7611476	: RECALCULATION of PATENT
Issue Date	: 11/03/2009	: TERM ADJUSTMENT IN VIEW
Appliction No	: 10/791,948	: OF WYETH AND NOTICE OF INTENT TO
Filed	: 03/03/2004	: ISSUE CERTIFICATE OF CORRECTION
		:

The Request for Recalculation is **GRANTED** to the extent indicated.

The patent term adjustment has been determined to be **851** days. The USPTO will *sua sponte* issue a certificate of correction reflecting the amount of PTA days determined by the recalculation.

Prior to the issuance of the certificate of correction, the USPTO will afford patentee an opportunity to be heard and request reconsideration. Accordingly, patentee has **one month or thirty (30) days**, whichever is longer, to file a request for reconsideration of this patent term adjustment calculation. See 35 U.S.C. 154(b)(3)(B)(ii) and 37 CFR 1.322(a)(4). No extensions of time will be granted under 37 CFR 1.136.

Patentee should use document code PET.OP if electronically filing a request for reconsideration of this patent term adjustment calculation. The patentee must also include the information required by 37 CFR 1.705(b)(2) and the fee required by 37 CFR 1.18(e). If patentee does not file a timely request for reconsideration of this patent term adjustment calculation including the information required by 37 CFR 1.705(b)(2) and the fee required by 37 CFR 1.18(e), the USPTO will issue a certificate of correction reflecting the PTA determination noted above.

Patentee should be aware that in order to preserve the right to review in the United States District Court for the District of Columbia of the USPTO patent term adjustment determination, patentee must ensure that he or she also take the steps required under 35 U.S.C. 154(b)(4)(A) in a timely manner. Nothing in the request for recalculation should be construed as providing an alternative time frame for commencing a civil action under 35 U.S.C. 154(b)(4)(A).

Any questions concerning this decision should be directed to the Office of Patent Legal Administration at 571-272-7702.

UNITED STATES PATENT AND TRADEMARK OFFICE

Commissioner for Patents
United States Patent and Trademark Office
P.O. Box 1450
Alexandria, VA 22313-1450
www.uspto.gov

COPY MAILED

MAR 0 6 2006

OFFICE OF PETITIONS

INGRASSIA FISHER & LORENZ, P.C.
7150 E. CAMELBACK, STE. 325
SCOTTSDALE AZ 85251

In re Application of :
Joseph S. Ng et al :
Application No. 10/791,957 : ON PETITION
Filed: March 2, 2004 :
Attorney Docket No. 024.0065 (04-0142) :

This is a decision on the petition, filed February 24, 2006, under 37 CFR 1.313(c)(3) to withdraw the above-identified application from issue after payment of the issue fee.

The petition is **GRANTED**.

The above-identified application is withdrawn from issue for express abandonment. See 37 CFR 1.313(c)(3). The above-identified application is expressly abandoned in favor of a continuing application filed February 24, 2006.

Telephone inquiries should be directed to the undersigned at (571) 272-3208.

Karen Creasy
Petitions Examiner
Office of Petitions
Office of the Deputy Commissioner
for Patent Examination Policy

UNITED STATES PATENT AND TRADEMARK OFFICE

Commissioner for Patents
United States Patent and Trademark Office
P.O. Box 1450
Alexandria, VA 22313-1450
www.uspto.gov

KNOBBE MARTENS OLSON & BEAR LLP
2040 MAIN STREET
FOURTEENTH FLOOR
IRVINE CA 92614

COPY MAILED

NOV 15 2006

OFFICE OF PETITIONS

In re Application of :
Weiling Peng, et al. :
Application No. 10/791,970 : DECISION ON PETITION
Filed: March 2, 2004 : TO WITHDRAW
Attorney Docket No. HARD1.020DV1 : FROM RECORD
:

This is a decision on the Request to Withdraw as attorney or agent under 37 C.F.R. § 1.36(b) or 37 C.F.R. § 10.40 filed August 15, 2006.

The request is **APPROVED**.

A review of the file record indicates that Knobbe, Martens, Olson & Bear, LLP: (1) does not have power of attorney in this patent application; and (2) has been employed or otherwise engaged in the proceedings in this patent application. In view of the present decision, Knobbe, Martens, Olson & Bear, LLP has/have been withdrawn from the present application and may not prepare or submit papers under 37 C.F.R. § 1.34, or correspond in any manner in this application unless appointed in an acceptable power of attorney under 37 C.F.R. § 1.32(b).

The request to change the correspondence of record is not acceptable as the requested correspondence address is not that of: (1) the first named signing inventor; or (2) the intervening assignee of the entire interest. All future communications from the Office will be directed to the first named signing inventor under 37 C.F.R. §3.71 at the first copied address below until otherwise properly notified by the applicant.

Applicant is reminded that there is no attorney of record at this time.

There is an outstanding Office action mailed September 21, 2006 that requires a reply from the applicant.

Telephone inquires concerning this decision should be directed to undersigned at 571-272-1642.

April M. Wise
Petitions Examiner
Office of Petitions

cc: WEILING PENG
10757 LEMON AVENUE
APT. 1927
ALTA LOMA, CA 91737

cc: GARDERE WYNNE SEWELL LLP
3000 THANKSGIVING TOWER
1601 ELM STREET
DALLAS, TX 75201

UNITED STATES PATENT AND TRADEMARK OFFICE

UNITED STATES DEPARTMENT OF COMMERCE
United States Patent and Trademark Office
Address: COMMISSIONER FOR PATENTS
P.O. Box 1450
Alexandria, Virginia 22313-1450
www.uspto.gov

APPLICATION NUMBER	FILING OR 371 (c) DATE	FIRST NAMED APPLICANT	ATTY. DOCKET NO./TITLE
10/791,970	03/02/2004	Weiling Peng	HARD1.020DV1

CONFIRMATION NO. 3693

OC000000021227528

OC000000021227528

20995
KNOBBE MARTENS OLSON & BEAR LLP
2040 MAIN STREET
FOURTEENTH FLOOR
IRVINE, CA 92614

Date Mailed: 11/15/2006

NOTICE REGARDING CHANGE OF POWER OF ATTORNEY

This is in response to the Power of Attorney filed 08/15/2006.

- The withdrawal as attorney in this application has been accepted. Future correspondence will be mailed to the new address of record. 37 CFR 1.33.

April M Wise

APRIL M WISE
OP (571) 272-1642

FORMER ATTORNEY/AGENT COPY

SPE RESPONSE FOR CERTIFICATE OF CORRECTION

Paper No.:20070328

DATE : March 28, 2007

TO SPE OF : ART UNIT 3753

SUBJECT : Request for Certificate of Correction on Patent No.: 7,025,089

A response is requested with respect to the accompanying request for a certificate of correction.

Please complete this form and return with file, within **7** days to:
Certificates of Correction Branch - PK 3-910
Palm location **7590** - Tel. No. 305-8201

With respect to the change(s) requested, correcting Office and/or Applicant's errors, should the patent read as shown in the certificate of correction? No new matter should be introduced, nor should the scope or meaning of the claims be changed.

Thank You For Your Assistance **Certificates of Correction Branch**

The request for issuing the above-identified correction(s) is hereby:
Note your decision on the appropriate box.

☐ **Approved** **All** changes apply.

☐ **Approved in Part** Specify below which changes **do not** apply.

☒ **Denied** State the reasons for denial below.

Comments:

The proposed amendment changes the scope of the claims

Eric Keasel

SPE: Eric Keasel **Art Unit** 3753

UNITED STATES PATENT AND TRADEMARK OFFICE

Commissioner for Patents
United States Patent and Trademark Office
P.O. Box 1450
Alexandria, VA 22313-1450
www.uspto.gov

Date Mailed : April 4, 2007

Patent No. :7,025,089
Inventor :Ian Marsac
Patent Issued :7,025,089
Docket No. :11390.4

Re: Request for Certificate of Correction

Consideration has been given your request for the issuance of a certificate of correction for the above-identified patent under the provisions of Rule(s) 1.322.

Inspection of the application for the patent reveals, however, that in connection with the alleged error pertaining to column 4, line 13of which applicant has referred; entry of the proposed amendment changes the scope of the claims.

In view of the foregoing applicants request in this matter is hereby denied. Any telephone inquiry concerning this communication should be directed to Ms. A. Green at (703) 308-9380 ext. 123.

Cecelia Newman
Decisions & Certificates
of Correction Branch
(703) 308-9390 or (703) 308-9380 Ext. 123

Buskop Law Group PC
1776 Yorktown, STE 550
Houston, TX 77056

CBN/arg

SPE RESPONSE FOR CERTIFICATE OF CORRECTION

Paper No.:20070705

DATE : July 5, 2007

TO SPE OF : ART UNIT 3753

SUBJECT : Request for Certificate of Correction on Patent No.: 7,025,089

A response is requested with respect to the accompanying request for a certificate of correction.

Please complete this form and return with file, within **7** days to:
Certificates of Correction Branch - PK 3-910
Palm location **7590** - Tel. No. 305-8201

With respect to the change(s) requested, correcting Office and/or Applicant's errors, should the patent read as shown in the certificate of correction? No new matter should be introduced, nor should the scope or meaning of the claims be changed.

Thank You For Your Assistance **Certificates of Correction Branch**

The request for issuing the above-identified correction(s) is hereby:
Note your decision on the appropriate box.

☐ **Approved** All changes apply.

☐ **Approved in Part** Specify below which changes **do not** apply.

☒ **Denied** State the reasons for denial below.

Comments:

A digital-to-analog converter is not the same device as an analog-to-digital converter. Therefore, the requested correction changes the scope of the claims. If they were the same device, there would be no need for the correction. A reissue application must be employed as the vehicle to "correct" the patent.

Eric Keasel

ERIC KEASEL
SUPERVISORY PATENT EXAMINER
TECHNOLOGY CENTER 3700

UNITED STATES PATENT AND TRADEMARK OFFICE

UNITED STATES DEPARTMENT OF COMMERCE
United States Patent and Trademark Office
Address: COMMISSIONER FOR PATENTS
P.O. Box 1450
Alexandria, Virginia 22313-1450
www.uspto.gov

KINNEY & LANGE, P.A.
THE KINNEY & LANGE BUILDING
312 SOUTH THIRD STREET
MINNEAPOLIS, MN 55415-1002

Mail Date: 04/21/2010

Applicant	: Richard Leone	: DECISION ON REQUEST FOR
Patent Number	: 7600651	: RECALCULATION of PATENT
Issue Date	: 10/13/2009	: TERM ADJUSTMENT IN VIEW
Appliction No	: 10/792,026	: OF WYETH AND NOTICE OF INTENT TO
Filed	: 03/02/2004	: ISSUE CERTIFICATE OF CORRECTION
		:

The Request for Recalculation is **GRANTED** to the extent indicated.

The patent term adjustment has been determined to be **604** days. The USPTO will *sua sponte* issue a certificate of correction reflecting the amount of PTA days determined by the recalculation.

Prior to the issuance of the certificate of correction, the USPTO will afford patentee an opportunity to be heard and request reconsideration. Accordingly, patentee has **one month or thirty (30) days**, whichever is longer, to file a request for reconsideration of this patent term adjustment calculation. See 35 U.S.C. 154(b)(3)(B)(ii) and 37 CFR 1.322(a)(4). No extensions of time will be granted under 37 CFR 1.136.

Patentee should use document code PET.OP if electronically filing a request for reconsideration of this patent term adjustment calculation. The patentee must also include the information required by 37 CFR 1.705(b)(2) and the fee required by 37 CFR 1.18(e). If patentee does not file a timely request for reconsideration of this patent term adjustment calculation including the information required by 37 CFR 1.705(b)(2) and the fee required by 37 CFR 1.18(e), the USPTO will issue a certificate of correction reflecting the PTA determination noted above.

Patentee should be aware that in order to preserve the right to review in the United States District Court for the District of Columbia of the USPTO patent term adjustment determination, patentee must ensure that he or she also take the steps required under 35 U.S.C. 154(b)(4)(A) in a timely manner. Nothing in the request for recalculation should be construed as providing an alternative time frame for commencing a civil action under 35 U.S.C. 154(b)(4)(A).

Any questions concerning this decision should be directed to the Office of Patent Legal Administration at 571-272-7702.

UNITED STATES PATENT AND TRADEMARK OFFICE

Commissioner for Patents
United States Patent and Trademark Office
P.O. Box 1450
Alexandria, VA 22313-1450
www.uspto.gov

GREENBERG TRAURIG
3773 HOWARD HUGHES PARKWAY
SUITE 500 NORTH
LAS VEGAS NV 89109

COPY MAILED

OCT 20 2005

OFFICE OF PETITIONS

In re Application of :
Scott D'Avanzo :
Application No. 10/792,061 : DECISION ON PETITION
Filed: March 2, 2004 :
Attorney Docket No. 5611.00017 :

This is a decision on the petition under 37 CFR 1.137(f), filed August 24, 2005, which is being treated as a petition under 37 CFR 1.137(b) to revive the present nonprovisional application for failure to timely notify the U.S. Patent and Trademark (USPTO) of the filing of an application in a foreign country, or under a multinational treaty that requires publication of applications eighteen months after filing. *See* 37 CFR 1.137(f).

The petition is **GRANTED**.

Petitioner states that the present nonprovisional application is the subject of an application filed in an eighteen-month publication country on March 2, 2005. However, the USPTO was unintentionally not notified of this filing within forty-five days subsequent to the filing of the subject application in an eighteen-month publication country. Accordingly, this application became abandoned pursuant to 35 U.S.C. 122(b)(2)(B)(iii) and 37 CFR 1.213(c) for failure to timely notify the Office of the filing of an application in a foreign country or under a multilateral international agreement that requires publication of applications eighteen months after filing.

A petition to revive an application abandoned pursuant to 35 U.S.C. 122(b)(2)(B)(iii) for failure to notify the USPTO of a foreign filing must be accompanied by:

(1) the required reply, which is met by the notification of such filing in a foreign country or under a multinational treaty;

(2) the petition fee as set forth in 37 CFR 1.17(m); and

(3) a statement that the entire delay in filing the required reply from the due date of the reply until the filing of a grantable petition was unintentional.

The present petition has been found to be in compliance with 37 CFR 1.137(b). Accordingly, the failure to timely notify the USPTO of a foreign or international filing within forty-five days after the date of filing of such foreign or international application as provided by 35 U.S.C. 122(b)(2)(B)(iii) and 37 CFR 1.213(c) is accepted as having been unintentionally delayed.

The previous Request and Certification under 35 U.S.C. 122(b)(2)(B)(i) has been rescinded. A Communication Regarding Rescission Of Nonpublication Request and/or Notice of Foreign Filing, which sets forth the projected publication date of January 26, 2006, accompanies this decision on petition.

The $750.00 petition fee will be charged to applicant's Deposit Account, as authorized.

This matter is being referred to Technology Center Art Unit 3713.

Any inquiries concerning this decision may be directed to the undersigned at (571) 272-3211.

Christina T. Donnell

Christina Tartera Donnell
Senior Petitions Attorney
Office of Petitions

Enclosure: Communication Regarding Rescission Of Nonpublication Request and/or Notice of Foreign Filing

UNITED STATES PATENT AND TRADEMARK OFFICE

Commissioner for Patents
United States Patent and Trademark Office
P.O. Box 1450
Alexandria, VA 22313-1450
www.uspto.gov

QUALCOMM INCORPORATED
5775 MOREHOUSE DR.
SAN DIEGO CA 92121

COPY MAILED

APR 23 2008

OFFICE OF PETITIONS

In re Application of	:	
Jun **Wang** et al.	:	
Application No. 10/792,062	:	DECISION ON PETITION
Filed: March 02, 2004	:	
Attorney Docket No. 030157	:	

This is a decision on the petition under the unintentional provisions of 37 CFR 1.137(b), filed November 01, 2007, to revive the above-identified application.

The petition is **DISMISSED**.

Any request for reconsideration of this decision must be submitted within TWO (2) MONTHS from the mail date of this decision. Extensions of time under 37 CFR 1.136(a) are permitted. The reconsideration request should include a cover letter entitled "Renewed Petition under 37 CFR 1.137(b)." This is **not** a final agency action within the meaning of 5 U.S.C. § 704.

The above-identified application became abandoned for failure to reply within the meaning of 37 CFR 1.113 in a timely manner to the final Office action mailed November 13, 2006, which set a shortened statutory period for reply of three (3) months. Three (3) month extension of time under the provisions of 37 CFR 1.136(a) was obtained. Accordingly, the application became abandoned on May 14, 2007.

A grantable petition under 37 CFR 1.137(b) must be accompanied by: (1) the required reply, unless previously filed; (2) the petition fee as set forth in 37 CFR 1.17(m); (3) a statement that the entire delay in filing the required reply from the due date for the reply until the filing of a grantable petition pursuant to 37 CFR 1.137(b) was unintentional; and (4) any terminal disclaimer (and fee as set forth in 37 CFR 1.20(d)) required by 37 CFR 1.137(d). Where there is a question as to whether either the abandonment or the delay in filing a petition under 37 CFR 1.137 was unintentional, the Director may require additional information. See MPEP 711.03(c)(II)(C) and (D). The instant petition lacks item (1).

The proposed reply required for consideration of a petition to revive must be a Notice of Appeal (and appeal fee required by 37 CFR 41.20(b)(2)), an amendment that *prima facie* places the application in condition for allowance, a Request for Continued Examination (RCE) and submission (37 CFR 1.114), or the filing of a continuing application under 37 CFR 1.53(b). See MPEP 711.03(c)(III)(A)(2). Since the amendment submitted does not *prima facie* place the application in condition for allowance, the reply required must be a Notice of Appeal (and appeal fee), RCE, or the filing of a continuing application under 37 CFR 1.53(b). See the enclosed PTOL-303.

Furthermore, an extension of time under 37 CFR 1.136 must be filed prior to the expiration of the maximum extendable period for reply. *See* In re Application of S., 8 USPQ2d 1630, 1631 (Comm'r Pats. 1988). Since the $2,230.00 extension of time fee submitted with the petition on November 01, 2007 was subsequent to the maximum extendable period for reply, this fee is unnecessary and will be credited to petitioner's deposit account.

In regard to the statement of unintentional delay, it is not apparent whether the person signing the statement of unintentional delay was in a position to have firsthand or direct knowledge of the facts and circumstances of the delay at issue. Nevertheless, such statement is being treated as having been made as the result of a reasonable inquiry into the facts and circumstances of such delay. See 37 CFR 10.18(b) and Changes to Patent Practice and Procedure; Final Rule Notice, 62 Fed. Reg. 53131, 53178 (October 10, 1997), 1203 Off. Gaz. Pat. Office 63, 103 (October 21, 1997). In the event that such an inquiry has not been made, petitioner must make such an inquiry. If such inquiry results in the discovery that it is not correct that the entire delay in filing the required reply from the due date for the reply until the filing of a grantable petition pursuant to 37 CFR 1.137(b) was unintentional, petitioner must notify the Office.

There is no indication that the person signing the petition was ever given a power of attorney to prosecute the application. If the person signing the petition desires to receive future correspondence regarding this application, the appropriate power of attorney documents must be submitted. While a courtesy copy of this decision is being mailed to the person signing the petition, all future correspondence will be directed to the address currently of record until appropriate instructions are received.

Further correspondence with respect to this matter should be addressed as follows:

By Mail: Mail Stop PETITION
Commissioner for Patents
P. O. Box 1450
Alexandria, VA 22313-1450

By hand: U. S. Patent and Trademark Office
Customer Service Window, Mail Stop Petitions

Randolph Building
401 Dulany Street
Alexandria, VA 22314

By fax: (571) 273-8300
ATTN: Office of Petitions

Telephone inquiries concerning this decision should be directed to Thuy Pardo at (571) 272-6052 or in her absence, the undersigned at (571)272-7099.

Chris Bottoff

for David A. Bucci
Petitions Examiner
Office of Petitions

Encl.: PTOL-303

Advisory Action Before the Filing of an Appeal Brief	Application No. 10/792,062	Applicant(s) WANG ET AL.	
	Examiner PIERRE-LOUIS DESIR	Art Unit 2617	

--The MAILING DATE of this communication appears on the cover sheet with the correspondence address --

THE REPLY FILED 01 November 2007 FAILS TO PLACE THIS APPLICATION IN CONDITION FOR ALLOWANCE.

1. ☐ The reply was filed after a final rejection, but prior to or on the same day as filing a Notice of Appeal. To avoid abandonment of this application, applicant must timely file one of the following replies: (1) an amendment, affidavit, or other evidence, which places the application in condition for allowance; (2) a Notice of Appeal (with appeal fee) in compliance with 37 CFR 41.31; or (3) a Request for Continued Examination (RCE) in compliance with 37 CFR 1.114. The reply must be filed within one of the following time periods:
   a) ☒ The period for reply expires 3 months from the mailing date of the final rejection.
   b) ☐ The period for reply expires on: (1) the mailing date of this Advisory Action, or (2) the date set forth in the final rejection, whichever is later. In no event, however, will the statutory period for reply expire later than SIX MONTHS from the mailing date of the final rejection.
   Examiner Note: If box 1 is checked, check either box (a) or (b). ONLY CHECK BOX (b) WHEN THE FIRST REPLY WAS FILED WITHIN TWO MONTHS OF THE FINAL REJECTION. See MPEP 706.07(f).

Extensions of time may be obtained under 37 CFR 1.136(a). The date on which the petition under 37 CFR 1.136(a) and the appropriate extension fee have been filed is the date for purposes of determining the period of extension and the corresponding amount of the fee. The appropriate extension fee under 37 CFR 1.17(a) is calculated from: (1) the expiration date of the shortened statutory period for reply originally set in the final Office action; or (2) as set forth in (b) above, if checked. Any reply received by the Office later than three months after the mailing date of the final rejection, even if timely filed, may reduce any earned patent term adjustment. See 37 CFR 1.704(b).

NOTICE OF APPEAL

2. ☐ The Notice of Appeal was filed on _____. A brief in compliance with 37 CFR 41.37 must be filed within two months of the date of filing the Notice of Appeal (37 CFR 41.37(a)), or any extension thereof (37 CFR 41.37(e)), to avoid dismissal of the appeal. Since a Notice of Appeal has been filed, any reply must be filed within the time period set forth in 37 CFR 41.37(a).

AMENDMENTS

3. ☒ The proposed amendment(s) filed after a final rejection, but prior to the date of filing a brief, will not be entered because
   (a) ☒ They raise new issues that would require further consideration and/or search (see NOTE below);
   (b) ☐ They raise the issue of new matter (see NOTE below);
   (c) ☐ They are not deemed to place the application in better form for appeal by materially reducing or simplifying the issues for appeal; and/or
   (d) ☒ They present additional claims without canceling a corresponding number of finally rejected claims.
   NOTE: _____. (See 37 CFR 1.116 and 41.33(a)).
4. ☐ The amendments are not in compliance with 37 CFR 1.121. See attached Notice of Non-Compliant Amendment (PTOL-324).
5. ☐ Applicant's reply has overcome the following rejection(s): _____.
6. ☐ Newly proposed or amended claim(s) _____ would be allowable if submitted in a separate, timely filed amendment canceling the non-allowable claim(s).
7. ☒ For purposes of appeal, the proposed amendment(s): a) ☒ will not be entered, or b) ☐ will be entered and an explanation of how the new or amended claims would be rejected is provided below or appended.
   The status of the claim(s) is (or will be) as follows:
   Claim(s) allowed: _____.
   Claim(s) objected to: _____.
   Claim(s) rejected: 1-45.
   Claim(s) withdrawn from consideration: _____.

AFFIDAVIT OR OTHER EVIDENCE

8. ☐ The affidavit or other evidence filed after a final action, but before or on the date of filing a Notice of Appeal will not be entered because applicant failed to provide a showing of good and sufficient reasons why the affidavit or other evidence is necessary and was not earlier presented. See 37 CFR 1.116(e).
9. ☐ The affidavit or other evidence filed after the date of filing a Notice of Appeal, but prior to the date of filing a brief, will not be entered because the affidavit or other evidence failed to overcome all rejections under appeal and/or appellant fails to provide a showing a good and sufficient reasons why it is necessary and was not earlier presented. See 37 CFR 41.33(d)(1).
10. ☐ The affidavit or other evidence is entered. An explanation of the status of the claims after entry is below or attached.

REQUEST FOR RECONSIDERATION/OTHER

11. ☒ The request for reconsideration has been considered but does NOT place the application in condition for allowance because: See Continuation Sheet.
12. ☐ Note the attached Information *Disclosure Statement*(s). (PTO/SB/08) Paper No(s). _____
13. ☐ Other: _____.

/Pierre-Louis Desir/
Examiner, Art Unit 2617

DWAYNE BOST
SUPERVISORY PATENT EXAMINER

Application No. 10/792,062

Continuation Sheet (PTO-303)

Continuation of 11. does NOT place the application in condition for allowance because: Independent claims have been amended. Such amendment would require further search and/or consideration.

UNITED STATES PATENT AND TRADEMARK OFFICE

Commissioner for Patents
United States Patent and Trademark Office
P.O. Box 1450
Alexandria, VA 22313-1450
www.uspto.gov

QUALCOMM INCORPORATED
5775 MOREHOUSE DR.
SAN DIEGO CA 92121

COPY MAILED

OCT 10 2008

OFFICE OF PETITIONS

In re Application of :
Jun WANG et al. :
Application No. 10/792,062 : ON PETITION
Filed: March 2, 2004 :
Attorney Docket No. 030157 :

This is a decision on the renewed petition under the unintentional provisions of 37 CFR 1.137(b), filed June 23, 2008, to revive the above-identified application. The renewed petition was filed within two months of the April 23, 2008 decision on the petition filed 11-1-07.

The petition is **GRANTED**.

The application became abandoned for failure to timely file a reply within the meaning of 37 CFR 1.113 to the final Office action of November 13, 2006. The proposed reply required for consideration of a petition to revive must be a Notice of Appeal (and appeal fee required by 37 CFR 41.20(b)(2), an amendment that *prima facie* places the application in condition for allowance, a Request for Continued Examination and submission (37 CFR 1.114), or the filing of a continuing application under 37 CFR 1.53(b). See MPEP 711.03(c)(III)(A)(2). A three (3) month extension of time pursuant to the provisions of 37 CFR 1.136(a) was obtained. Accordingly, the date of abandonment of this application is May 14, 2007.

The petition satisfies the requirements of 37 CFR 1.137(b) in that petitioner has supplied (1) the reply in the form of a Request for Continued Examination (RCE) and fee of $ 810, and the submission required by 37 CFR 1.114; (2) the petition fee of $ 1540; and (3) a proper statement of unintentional delay.

The petition filed 11-02-07 included the petition fee of $1540. Since the $1540 petition fee need only be paid once, the petition fee charged with respect to the petition resubmitted 6-23-08 is unnecessary and will be credited to petitioner's deposit account.
It is not apparent whether the person signing the statement of unintentional delay was in a position to have firsthand or direct knowledge of the facts and circumstances of the delay at

It is not apparent whether the person signing the statement of unintentional delay was in a position to have firsthand or direct knowledge of the facts and circumstances of the delay at issue. Nevertheless, such statement is being treated as having been made as the result of a reasonable inquiry into the facts and circumstances of such delay. See 37 CFR 10.18(b) and Changes to Patent Practice and Procedure; Final Rule Notice, 62 Fed. Reg. 53131, 53178 (October 10, 1997), 1203 Off. Gaz. Pat. Office 63, 103 (October 21, 1997). In the event that such an inquiry has not been made, petitioner must make such an inquiry. If such inquiry results in the discovery that it is not correct that the entire delay in filing the required reply from the due date for the reply until the filing of a grantable petition pursuant to 37 CFR 1.137(b) was unintentional, petitioner must notify the Office.

Telephone inquiries concerning this decision should be directed to Karin Reichle at (571) 272-6051.

This application is being referred to Technology Center AU 2617 for processing and for appropriate action by the Examiner in the normal course of business.

David Bucci
Petitions Examiner
Office of Petitions

UNITED STATES PATENT AND TRADEMARK OFFICE

Commissioner for Patents
United States Patent and Trademark Office
P.O. Box 1450
Alexandria, VA 22313-1450
www.uspto.gov

Michael S. Neustel
Suite No. 4
2534 South University Drive
Fargo, MD 58103

COPY MAILED

SEP 28 2006

OFFICE OF PETITIONS

In re Application of :

Robert D. Payne :
Application No. 10/792,081 : DECISION ON PETITION
Filed: September 7, 2006 : TO WITHDRAW
Attorney Docket No. PAYN-001 : FROM RECORD
:

This is a decision on the Request to Withdraw as attorney or agent of record under 37 C.F.R. § 1.36(b), filed February 24, 2006.

The request is **APPROVED**.

A grantable request to withdraw as attorney/agent of record must be signed by every attorney/agent seeking to withdraw or contain a clear indication that one attorney is signing on behalf of another/others. A request to withdraw will not be approved unless at least 30 (thirty) days would remain between the date of approval and the later of the expiration date of a time to file a response or the expiration date of the maximum time period which can be extended under 37 C.F.R. § 1.136(a).

The request was signed by Michael S. Neustel, the sole attorney of record.

Michael S. Neustel has been withdrawn as attorney of record.

Applicant is reminded that there is no attorney of record at this time.

All future correspondence will be directed to the first named inventor Robert D. Payne at the address indicated below.

The application is currently abandoned for failure to reply to the Office action mailed December 21, 2005.

Telephone inquiries concerning this decision should be directed to Terri Williams at 571-272-2991.

David Bucci
Petitions Examiner
Office of Petitions

cc: **Robert D. Payne**
413B West Lane
Virginia Beach, VA 23454

cc: **Robert D. Payne**
3800 Pughsville Road, Lot 63
Suffolk, VA 23435

UNITED STATES PATENT AND TRADEMARK OFFICE

Commissioner for Patents
United States Patent and Trademark Office
P.O. Box 1450
Alexandria, VA 22313-1450
www.uspto.gov

PACESETTER, INC.
15900 VALLEY VIEW COURT
SYLMAR CA 91392-9221

COPY MAILED

APR 23 2008

OFFICE OF PETITIONS

In re Application of	:	
Katie Hoberman et al	:	
Application No. 10/792,082	:	DECISION GRANTING PETITION
Filed: March 2, 2004	:	UNDER 37 CFR 1.313(c)(2)
Attorney Docket No. A04P1018	:	

This is a decision on the petition under 37 CFR 1.313(c)(2), filed April 22, 2008, to withdraw the above-identified application from issue after payment of the issue fee.

The petition is **GRANTED**.

The above-identified application is withdrawn from issue for consideration of a submission under 37 CFR 1.114 (request for continued examination). *See* 37 CFR 1.313(c)(2).

Petitioner is advised that the issue fee paid on April 2, 2008 cannot be refunded. If, however, this application is again allowed, petitioner may request that it be applied towards the issue fee required by the new Notice of Allowance.[1]

Telephone inquiries should be directed to the undersigned at (571) 272-3208.

This application is being referred to Technology Center AU 3766 for processing of the request for continued examination under 37 CFR 1.114 and for consideration of the concurrently filed IDS.

Karen Creasy
Petitions Examiner
Office of Petitions

[1] *The request to apply the issue fee to the new Notice may be satisfied by completing and returning the new Part B – Fee(s) Transmittal Form (along with any balance due at the time of submission). Petitioner is advised that the Issue Fee Transmittal Form* ***must*** *be completed and timely submitted to avoid abandonment of the application.*

UNITED STATES PATENT AND TRADEMARK OFFICE

Commissioner for Patents
United States Patent and Trademark Office
P.O. Box 1450
Alexandria, VA 22313-1450
www.uspto.gov

CALFEE, HALTER & GRISWOLD, LLP
1110 FIFTH THIRD CENTER
21 EAST STATE STREET
COLUMBUS OH 43215-4243

COPY MAILED
JUL 14 2006
OFFICE OF PETITIONS

In re Application of :
WAYCHOFF :
Application No. 10/792,086 : DECISION ON PETITION
Filed: March 3, 2004 : TO WITHDRAW
Attorney Docket No. 29917-04000 : FROM RECORD
:

This is a decision on the Request to Withdraw as attorney or agent of record under 37 C.F.R. § 1.36(b), filed February 10, 2006.

The request is **APPROVED**.

A grantable request to withdraw as attorney/agent of record must be signed by every attorney/agent seeking to withdraw or contain a clear indication that one attorney is signing on behalf of another/others. A request to withdraw will not be approved unless at least 30 (thirty) days would remain between the date of approval and the later of the expiration date of a time to file a response or the expiration date of the maximum time period which can be extended under 37 C.F.R. § 1.136(a).

The request was signed by Joan N. Drew on behalf on behalf of all attorneys of record who are associated with Customer No. 24024. All practitioners associated with Customer Number 24024 have been withdrawn. For those practitioners associated with Customer Number 24024 who were not given power of attorney on March 3, 2004 in the combined Declaration and Power of Attorney, they may not prepare or submit papers under 37 C.F.R. § 1.34, or correspond in any manner in this application unless appointed in an acceptable power of attorney under 37 C.F.R. § 1.32(b).

Applicant is reminded that there is no attorney of record at this time.

The request to change the correspondence of record is not acceptable as the requested correspondence address is not that of: (1) the first named signing inventor; or (2) an intervening assignee of the entire interest under 37 C.F.R 3.71. All future communications from the Office will be directed to the first named signing inventor at the first copied address below until otherwise properly notified by the applicant.

The response filed March 29, 2006 to the non-final Office action will be forwarded to Group Art Unit 3763 for further processing.

Telephone inquiries concerning this decision should be directed to the undersigned at (571) 272-4787.

Denise Pothier
Petitions Examiner
Office of Petitions

cc: Challen W. Waychoff II
34798 Nelson Drive
Piedmont, OH 43983

cc: McNees, Wallace & Nurick LLC
21 E. State Street, 17th Floor
Columbus, OH 43215-4228

UNITED STATES PATENT and TRADEMARK OFFICE

31 MAR 2008

COMMISSIONER FOR PATENTS
UNITED STATES PATENT AND TRADEMARK OFFICE
P.O BOX 1450
ALEXANDRIA, VA 22313-1450
www.uspto.gov

MERCK AND CO., INC
P O BOX 2000
RAHWAY NJ 07065-0907

In re Application of	:	DECISION ON
ARRUDA et al	:	
Int. Application: PCT/US2005/044294	:	
Application No.: 11/792,121	:	REQUEST UNDER
Int. Filing Date: 09 December 2005	:	
Priority Date: 15 December 2004	:	
Attorney's Docket No.: 21787YP	:	
For: INHIBITORS OF AKT ACTIVITY	:	37 CFR 1.497(d)

This is a decision on petitioner's "TRANSMITTAL LETTER" filed on 06 March 2008, which is being treated as a request under 37 CFR 1.497(d) to add joint inventor Mark T. Bilodeau and Peter J. Manley in the executed declaration. A petition fee of $130.00 as been charged to petitioner's Deposit Account No. 13-2755 as authorized in the petition.

BACKGROUND

On 09 December 2005, applicants filed international application No. PCT/US2005/044294 and claiming a priority date of 15 December 2004.

On 31 May 2007, applicants filed a Transmittal Letter for entry into the national stage in the United States of America. Filed with the Transmittal Letter was, inter alia, the requisite basic national fee, and an executed declaration was submitted at such time.

On 06 March 2008, applicants filed, inter alia, a request under 37 CFR 1.497(d) and an executed declaration that added Mark T. Bilodeau and Peter J. Manley as co-inventors, who were not listed in the international application.

DISCUSSION

A submission under 37 CFR 1.497(d) must include:

(1) a statement from each person being added as an inventor and from each person being deleted as an inventor that the error in inventorship occurred without deceptive intention on his or her part;

(2) the fee set forth in § 1.17(I); and

(3) If an assignment has been executed by any of the original named inventors, the written consent of the assignee (see 37 CFR §3.73(b) of this chapter).

A review of the application file reveals that applicants have satisfied items (1) - (2) under 37 CFR 1.497(d), but not item (3).

With respect to item (1), the statements submitted on 06 March 2008 by Mark T. Bilodeau and Peter J. Manley are sufficient because the statements state that the error in inventorship occurred without a deceptive intent.

With respect to item (2), the processing fee of $130.00 has been charged to the Deposit Account No.: 13-2755.

With respect to item (3), Merck & Co., the assignee, consents to the correction of inventorship to the above application. However, there is no copy of the executed assignment to the assignee in the file. To establish the right of the Assignee to take action, applicants must submit a copy of the executed assignment or specify the reel and frame number. Note MPEP 324 and 37 CFR 3.73(b).

Accordingly, the request does not meet the requirements under 37 CFR 1.497(d).

CONCLUSION

For the reasons above, the request under 37 CFR 1.497(d) is **DISMISSED** without prejudice.

If reconsideration on the merits of this petition is desired, a proper reply must be filed within TWO (2) MONTHS from the mail date of this decision. Any reconsideration request should include a cover letter entitled "Renewed Request Under 37 CFR 1.497(d)". No additional petition fee is required. Extensions of time may be obtained under 37 CFR 1.136(a).

Any further correspondence with respect to this matter should be addressed to the Mail Stop PCT, Commissioner for Patents, Office of PCT Legal Administration, P.O. Box 1450, Alexandria, Virginia 22313-1450, with the contents of the letter marked to the attention of the Office of PCT Legal Administration.

Rafael Bacares
PCT Legal Examiner
PCT Legal Administrative Office
Telephone: (571) 272-3276
Facsimile: (571) 273-0459

UNITED STATES PATENT AND TRADEMARK OFFICE

Commissioner for Patents
United States Patent and Trademark Office
P.O. Box 1450
Alexandria, VA 22313-1450
www.uspto.gov

HOLLAND & KNIGHT LLP
2099 PENNSYLVANIA AVE
SUITE 100
WASHINGTON DC 20006

COPY MAILED

DEC 14 2009

OFFICE OF PETITIONS

In re Application of :
Jeong D. SEO et al. :
Application No. 10/792,130 : DECISION ON PETITION
Filed: March 04, 2004 :
Attorney Docket No. **K-0619** :

This is a decision on the petition under the unintentional provisions of 37 CFR 1.137(b), filed October 05, 2009, to revive the above-identified application.

The petition is **GRANTED**.

This application became abandoned for failure to timely pay the issue and publication fees on or before September 30, 2009, as required by the Notice of Allowance and Fee(s) Due, mailed June 30, 2009. Accordingly, the date of abandonment of this application is October 1, 2009.

The petition satisfies the requirements of 37 CFR 1.137(b) in that petitioner has supplied (1) the reply in the form of payment of the issue fee of $1510 and the publication fee of $300, (2) the petition fee of $1620; and (3) a proper statement of unintentional delay. Accordingly, the failure to timely pay the issue fee as required by the Notice of Allowance and Fee(s) is accepted as being unintentionally delayed.

Telephone inquiries concerning this decision should be directed to Tredelle Jackson at (571) 272-2783.

This application is being referred to the Office of Data Management for processing into a patent.

Ramesh Krishnamurthy
Petitions Examiner
Office of Petitions

PTO/SB/80 (01-06)
Approved for use through 12/31/2008 OMB 0651-0035
U.S Patent and Trademark Office: U.S. DEPARTMENT OF COMMERCE
Under the Paperwork Reduction Act of 1995, no persons are required to respond to a collection of information unless it displays a valid OMB control number

POWER OF ATTORNEY TO PROSECUTE APPLICATIONS BEFORE THE USPTO

Before 10/1/09

I hereby revoke all previous powers of attorney given in the application identified in the attached statement under 37 CFR 3.73(b).

I hereby appoint:

☒ Practitioners associated with the Customer Number: 70144

OR

☐ Practitioner(s) named below (if more than ten patent practitioners are to be named, then a customer number must be used):

Name	Registration Number	Name	Registration Number

as attorney(s) or agent(s) to represent the undersigned before the United States Patent and Trademark Office (USPTO) in connection with any and all patent applications assigned only to the undersigned according to the USPTO assignment records or assignment documents attached to this form in accordance with 37 CFR 3.73(b).

Please change the correspondence address for the application identified in the attached statement under 37 CFR 3.73(b) to:

☒ The address associated with Customer Number: 70144

OR

☐ Firm or Individual Name			
Address			
City		State	Zip
Country			
Telephone		Email	

Assignee Name and Address:
LG Display Co., Ltd.
20, Yoido-dong, Youngdungpo-gu
Seoul, Korea

A copy of this form, together with a statement under 37 CFR 3.73(b) (Form PTO/SB/96 or equivalent) is required to be filed in each application in which this form is used. The statement under 37 CFR 3.73(b) may be completed by one of the practitioners appointed in this form if the appointed practitioner is authorized to act on behalf of the assignee, and must identify the application in which this Power of Attorney is to be filed.

SIGNATURE of Assignee of Record

The individual whose signature and title is supplied below is authorized to act on behalf of the assignee

Signature	J. S. Kim	Date	June 10, 2008
Name	Joo-Sup Kim	Telephone	031-450-7450
Title	Vice President / Head of Intellectual Property Center		

This collection of information is required by 37 CFR 1.31, 1.32 and 1.33. The information is required to obtain or retain a benefit by the public which is to file (and by the USPTO to process) an application. Confidentiality is governed by 35 U.S.C. 122 and 37 CFR 1.11 and 1.14. This collection is estimated to take 3 minutes to complete, including gathering, preparing, and submitting the completed application form to the USPTO. Time will vary depending upon the individual case. Any comments on the amount of time you require to complete this form and/or suggestions for reducing this burden, should be sent to the Chief Information Officer, U.S. Patent and Trademark Office, U.S. Department of Commerce, P.O. Box 1450, Alexandria, VA 22313-1450. DO NOT SEND FEES OR COMPLETED FORMS TO THIS ADDRESS. SEND TO: **Commissioner for Patents, P.O. Box 1450, Alexandria, VA 22313-1450.**

If you need assistance in completing the form, call 1-800-PTO-9199 and select option 2.

American LegalNet, Inc.
www.FormsWorkflow.com

UNITED STATES PATENT AND TRADEMARK OFFICE

Commissioner for Patents
United States Patent and Trademark Office
P.O. Box 1450
Alexandria, VA 22313-1450
www.uspto.gov

MACPHERSON KWOK CHEN & HEID LLP
2033 GATEWAY PLACE
SUITE 400
SAN JOSE CA 95110

COPY MAILED

SEP 28 2006

OFFICE OF PETITIONS

In re Patent No. 6,961,660 :
Issue Date: November 1, 2005 :
Application No. 10/792,143 : NOTICE
Filed: March 3, 2004 :
Attorney Docket No. SIRF.P226.US.C1 :

This is a notice regarding your request for acceptance of a fee deficiency submission under 37 CFR 1.28. On September 1, 1998, the Court of Appeals for the Federal Circuit held that 37 CFR 1.28(c) is the sole provision governing the time for correction of the erroneous payment of the issue fee as a small entity. **See DH Technology v. Synergystex International, Inc. 154 F.3d 1333, 47 USPQ2d 1865 (Fed. Cir. Sept. 1, 1998).**

The Office no longer investigates or rejects original or reissue applications under 37 CFR 1.56. **1098 Off. Gaz. Pat. Office 502 (January 3, 1989).** Therefore, nothing in this Notice is intended to imply that an investigation was done.

Your fee deficiency submission under 37 CFR 1.28 is hereby **ACCEPTED.**

This application no longer qualifies for small entity status. Accordingly, all future fees must be paid at the large entity rate.

Inquiries related to this communication should be directed to the undersigned at (571) 272-3208.

Karen Creasy

Karen Creasy
Petitions Examiner
Office of Petitions

UNITED STATES PATENT AND TRADEMARK OFFICE

Commissioner for Patents
United States Patent and Trademark Office
P.O. Box 1450
Alexandria, VA 22313-1450
www.uspto.gov

KENYON & KENYON LLP
RIVERPARK TOWERS, SUITE 600
333 W. SAN CARLOS ST.
SAN JOSE, CA 95110

COPY MAILED

JUN 07 2006

OFFICE OF PETITIONS

In re Application of Merchant et al. :
Application No. 10/792,154 : Decision on Petition
Filing Date: March 2, 2004 :
Attorney Docket No. Intel 2207/793203 :

This is a decision on the petition under 37 CFR 1.137(b), filed March 23, 2006 to revive the above-identified application.

The petition is **granted**.

This application became abandoned for failure to file a proper reply within three months to the non-final Office action mailed March 29, 2005. An extension of time under the provisions of 37 CFR 1.136(a) was not obtained. Accordingly, this application became abandoned on June 30, 2005. A Notice of Abandonment was mailed on February 23, 2006.

The instant petition requests revival of the application.

Petitioner has met the requirements to revive the above-identified application pursuant to 37 CFR 1.137(b). Therefore, the petition is granted and the application is revived.

Technology Center Art Unit 2154 will be informed of the instant decision and the application and papers filed on March 23, 2006, will be further examined in due course.

Telephone inquiries regarding this communication should be directed to Petitions Attorney Steven Brantley at (571) 272-3203.

Charles Steven Brantley
Senior Petitions Attorney
Office of Petitions

UNITED STATES PATENT AND TRADEMARK OFFICE

COMMISSIONER FOR PATENTS
UNITED STATES PATENT AND TRADEMARK OFFICE
P.O. BOX 1450
ALEXANDRIA, VA 22313-1450
www.uspto.gov

MAIL

SEP 3 0 2004

DIRECTOR OFFICE
TECHNOLOGY CENTER 2600

Ernest D. Buff
Ernest D. Buff & Associates, LLC
231 Somerville Road
Bedminster NJ 07921

In re Application of :
Eric INSELBERG, et al. :
Application No. 10/792,170 : DECISION ON PETITION
Filed: March 3, 2004 : TO MAKE SPECIAL
For: METHOD AND APPARATUS FOR :
INTERACTIVE AUDIENCE PARTICIPATION AT A :
LIVE SPECTATOR EVENT

This is a decision on the petition filed August 18, 2004 under Manual of Patent Examination Procedure §708.02, VIII requesting accelerated examination.

The petition under Manual of Patent Examination Procedure §708.02, VIII, must:
(1) be filed prior to receiving any examination by the examiner,
(2) be accompanied by the required fee- $130,
(3) the claims should be directed to a single invention (if it is determined that the claims pertain to more than one invention, then applicant will have to make an election without traverse or forfeit accelerated examination status),
(4) state that a pre-examination search was made, and fully discuss the search method employed, such as classes and subclasses searched, publications, Chemical abstracts, patents, etc. A search made by a foreign patent office satisfies this requirement,
(5) be accompanied by a copy of each of the references most closely related to the subject matter encompassed by the claims if said references are not already of record,
(6) fully discuss the references, pointing out with the particularity required by 37 C.F.R. §1.111 (b) and (c), how the claimed subject matter is patentable over the references.

The petitioner meets all the above-listed requirements. Accordingly, the petition is **GRANTED**.

The application will retain its special status throughout its entire prosecution, including any appeal to the Board of Patent Appeals and Interferences, subject only to diligent prosecution by the applicant.

Kenneth A. Wieder
Special Program Examiner
Technology Center 2600
Communications

UNITED STATES PATENT AND TRADEMARK OFFICE

Commissioner for Patents
United States Patent and Trademark Office
P.O. Box 1450
Alexandria, VA 22313-1450
www.uspto.gov

SEAGATE TECHNOLOGY c/o MOFO SF
425 MARKET ST.
SAN FRANCISCO CA 94105

COPY MAILED

JUN 0 1 2007

OFFICE OF PETITIONS

In re Application of :
HERNDON, Troy M. et al. :
Application No. 10/792,177 : DECISION ON PETITION
Filed: March 02, 2004 : TO WITHDRAW
Attorney Docket No. **3758** : FROM RECORD
:

This is a decision on the Request to Withdraw as attorney or agent of record under 37 C.F.R. § 1.36(b), filed April 24, 2007.

The request is **APPROVED.**

A grantable request to withdraw as attorney/agent of record must be signed by every attorney/agent seeking to withdraw or contain a clear indication that one attorney is signing on behalf of another/others. A request to withdraw will not be approved unless at least 30 (thirty) days would remain between the date of approval and the later of the expiration date of a time to file a response or the expiration date of the maximum time period which can be extended under 37 C.F.R. § 1.136(a).

The request was signed by Peter J. Yim on behalf of all attorneys of record. Applicant is reminded that there is no attorney of record at this time.

The request to change the correspondence of record is not acceptable as the requested correspondence address is not that of: (1) the first named signing inventor; or (2) an intervening assignee of the entire interest under 37 C.F.R 3.71. All future communications from the Office will be directed to the first named signing inventor at the first copied address below until otherwise properly notified by the applicant.

There is an outstanding Office action mailed February 12, 2007 that requires a reply from the applicant.

Telephone inquiries concerning this decision should be directed to Tredelle Jackson at 571-272-2783.

Monica A. Graves
Petitions Examiner
Office of Petitions

cc: **TROY MICHAEL HERNDON**
1508 JARVIS COURT
SAN JOSE, CA 95118

cc: **STEPHEN C. DURANT**
NOVAK DRUCE & QUIGG LLP
ONE MARKET PLAZA
SAN FRANCISCO, CA 94105

UNITED STATES PATENT AND TRADEMARK OFFICE

Commissioner for Patents
United States Patent and Trademark Office
P.O. Box 1450
Alexandria, VA 22313-1450
www.uspto.gov

SWANSON & BRATSCHUN L.L.C.
1745 SHEA CENTER DRIVE
SUITE 330
HIGHLANDS RANCH CO 80129

COPY MAILED

APR 13 2007

OFFICE OF PETITIONS

In re Application of :
Debecker, et al. :
Application No. 10/792,193 : DECISION ON PETITION
Filed: March 3, 2004 :
Attorney Docket No. VE.11 496/C :

This is a decision on the petition filed November 6, 2006, which is being treated as a petition under 37 CFR 3.81(b) to correct the name of the assignee on the front page of the above-identified patent by way of a certificate of correction.

The petition is **DISMISSED**.

Petitioner requests issuance of a certificate of correction in the name of "Advanced Lightweight Constructions Group B.V.".

37 CFR 3.81(b), effective June 25, 2004, reads:

> *After payment of the issue fee:* Any request for issuance of an application in the name of the assignee submitted after the date of payment of the issue fee, and any request for a patent to be corrected to state the name of the assignee, must state that the assignment was submitted for recordation as set forth in § 3.11 before issuance of the patent, and must include a request for a certificate of correction under § 1.323 of this chapter (accompanied by the fee set forth in § 1.20(a) and the processing fee set forth in § 1.17(i) of this chapter. *See also* MPEP 1481.01.

The petition is dismissed because petitioner has not submitted evidence that an assignment to "Advanced Lightweight Constructions Group B.V." was submitted for recordation prior to issuance and U.S. Patent and Trademark Office assignment records do not disclose that an assignment to "Advanced Lightweight Constructions Group B.V." has been recorded.

Further correspondence with respect to this matter should be addressed as follows:

By mail: Mail Stop PETITIONS
Commissioner for Patents
Post Office Box 1450
Alexandria, VA 22313-1450

By hand: Customer Service Window
Mail Stop Petitions
Randolph Building
401 Dulany Street
Alexandria, VA 22314

By fax: (571) 273-8300
ATTN: Office of Petitions

Telephone inquiries concerning this decision on petition should be directed to the undersigned at (571) 272-3230.

Shirene Willis Brantley

Shirene Willis Brantley
Senior Petitions Attorney
Office of Petitions

UNITED STATES PATENT AND TRADEMARK OFFICE

Commissioner for Patents
United States Patent and Trademark Office
P.O. Box 1450
Alexandria, VA 22313-1450
www.uspto.gov

SWANSON & BRATSCHUN L.L.C.
1745 SHEA CENTER DRIVE
SUITE 330
HIGHLANDS RANCH CO 80129

COPY MAILED

MAY 24 2007

OFFICE OF PETITIONS

In re Application of :
Debecker, et al. :
Application No. 10/792,193 : DECISION ON PETITION
Filed: March 3, 2004 :
Attorney Docket No. VE.11 496/C :

This is a decision on the reconsideration petition under 37 CFR 3.81(b), filed April 20, 2007, requesting correction of the name of the assignee on the front page of the above-identified patent by way of a certificate of correction.

The petition is **GRANTED**.

Petitioner requests issuance of a certificate of correction in the name of "Advanced Lightweight Constructions Group B.V.". and states that no assignee name was provided at the time of payment of the issue fee. Accordingly, petitioner requests that a certificate of correction be issued to reflect the correct assignee on the front page of the Letters Patent in the patent to be issued from the application.

37 CFR 3.81(b), effective June 25, 2004, reads:

> *After payment of the issue fee:* Any request for issuance of an application in the name of the assignee submitted after the date of payment of the issue fee, and any request for a patent to be corrected to state the name of the assignee, must state that the assignment was submitted for recordation as set forth in § 3.11 before issuance of the patent, and must include a request for a certificate of correction under § 1.323 of this chapter (accompanied by the fee set forth in § 1.20(a) and the processing fee set forth in § 1.17(i) of this chapter.

The request was accompanied by a certificate of correction (and fee) as required by 3.81(b). Further, Office assignment records reflect that Advanced Lightweight Constructions Group B.V. is the assignee of record. Accordingly, as the request complies with the provisions of 37 CFR 3.81(b), it would be appropriate for a certificate of correction to be processed after issuance of this application into a patent.

Inquiries concerning this decision should be directed to the undersigned at (571) 272-3230. Any questions concerning the issuance of a certificate of correction should be directed to the Certificates of Correction Branch at (571) 272-4200.

This matter is being referred to the Certificates of Correction Branch for processing of a certificate of correction after issuance of this application into a patent. Certificates of Correction Branch will address the request to add the name of single firm, filed on November 6, 2006.

Shirene Willis Brantley
Senior Petitions Attorney
Office of Petitions

SPE RESPONSE FOR CERTIFICATE OF CORRECTION

Paper No.: X

DATE : June 23, 2008

TO SPE OF : ART UNIT 2191

SUBJECT : Request for Certificate of Correction for Appl. No.: 10/792208 Patent No.: 7322026 B2

A response is requested with respect to a request for a certificate of correction.

With respect to the change(s) requested to correct Office and/or Applicant's errors, should the patent read as shown in the certificate of correction attached herewith or the COCIN document(s), in IFW images for the above-identified patented application? No new matter should be introduced, nor should the scope or meaning of the claims be changed.

If the response is for an IFW, within **7** days, please complete and forward the response, to the employee (named below) via scanning into application images, using document code **COCX**.

DO NOT SENT TO ATTORNEY

If the response is for a paper file wrapper, please complete the response and forward the response with the paper file wrapper, to the employee (named below), within **7** days, to:

Certificates of Correction Branch (CofC)
South Tower - 9A22
Palm Location 7580

You can fax the Directors/SPE response to 571-270-9990

LAMONTE NEWSOME
Certificates of Correction Branch
703-308-9390 ext. 112

Thank You For Your Assistance

The request for issuing the above-identified correction(s) is hereby:
Note your decision on the appropriate box.

- ☑ **Approved** — **All** changes apply.
- ☐ **Approved in Part** — Specify below which changes **do not** apply.
- ☐ **Denied** — State the reasons for denial below.

Comments: _____

_____

_____

_____

_____

W. Y. Chen
WEI Y. ZHEN
SPE

2191
Art Unit

Related Appeals and Interferences

No known appeals, interferences, or judicial proceedings are related to or will directly affect or have a bearing on the Board's decision on this Appeal. The Board's decision on this Appeal will not affect any known appeals, interferences, or judicial proceedings.

UNITED STATES PATENT AND TRADEMARK OFFICE

Commissioner for Patents
United States Patent and Trademark Office
P.O. Box 1450
Alexandria, VA 22313-1450
www.uspto.gov

JoAnne M. Denison
DENISON & ASSOCS., PC
212 W. Washington Blvd.,
Suite 2004
Chicago IL 60606

COPY MAILED

MAR 2 9 2007

OFFICE OF PETITIONS

In re Application of :
Gambla et al. :
Application No. 10/792235 : ON PETITION
Filed: 03/03/2004 :
For: MALE TOILET SPRAY SHIELD :

This is a decision on the "PETITION TO REVIVE," filed January 26, 2007, which is being treated as a petition under 37 CFR 1.137(b).

The application became abandoned for failure to reply in a timely manner to the Restriction Requirement mailed on January 5, 2006, which set an extendable one-month period for reply. No extensions of time under the provisions of 37 CFR 1.136(a) were obtained. Accordingly, the application became abandoned on February 6, 2006. A Notice of Abandonment was mailed on August 18, 2006.

The petition satisfies the requirements of 37 CFR 1.137(b) in that petitioner has supplied (1) the reply; (2) the petition fee; and (3) an adequate statement of unintentional delay. The Office notes that 37 CFR 1.137(b)(3) requires a petitioner to submit a statement that "the entire delay in filing the required reply from the due date for the reply until the filing of a grantable petition pursuant to this paragraph was unintentional." However, the statement presented will be accepted and construed as the statement required by 37 CFR 1.137(b)(3). Petitioner must notify the Office if this is not a correct interpretation of the statement contained in the present petition.

Accordingly, the petition under 37 CFR 1.137(b) is **GRANTED**.

The current fee of $750.00 for filing a 37 CFR 1.137(b) will be charged to the Deposit Account, as authorized.

Telephone inquiries concerning this decision should be directed to the undersigned at (571) 272-3211. All other inquiries concerning either the examination procedures or status of the application should be directed to the Technology Center.

This matter is being referred to Technology Center Art Unit 3751.

Christina Tartera Donnell

Christina Tartera Donnell
Senior Petitions Attorney
Office of Petitions

UNITED STATES PATENT AND TRADEMARK OFFICE

COMMISSIONER FOR PATENTS
UNITED STATES PATENT AND TRADEMARK OFFICE
P.O. BOX 1450
ALEXANDRIA, VA 22313-1450
www.uspto.gov

Paper No.

WILSON, SONSINI, GOODRICH &
ROSATI, P.C.
650 PAGE MILL RD.
PALO ALTO, CA 94304

MAILED

JUL 26 2010

OFFICE OF PETITIONS

In re Application of :
Buechler : DECISION ON APPLICATION
Application No. 10/792,258 : FOR
Filed: March 2, 2004 : PATENT TERM ADJUSTMENT
Atty Docket No.
36671-716303 :

This is a decision on the "REQUEST FOR RECONSIDERATION OF PATENT TERM ADJUSTMENT UNDER UNDER 37 CFR 1.705(d)," filed November 18, 2008. Patentee requests that the patent term adjustment of five hundred and seventy two (572) days be adjusted to a determination of one thousand one hundred seventy-nine (1179) days.

The request for reconsideration of patent term adjustment is **GRANTED-in-Part**. Patentee is entitled to a PTA adjustment of 1180 days. The Office will *sua sponte* issue certificate of correction reflecting this decision. The Office will adjust the PTA calculation to reflect this decision.

On November 4, 2008, the above-identified application matured into US Patent No. 7,445,941 with a patent term adjustment of 572 days. This request for reconsideration of patent term adjustment was timely filed within two months of the issue date of the patent. See 37 CFR 1.705(d).

The Office acknowledges submission of the $200.00 fee set forth in 37 CFR 1.18(e), paid on November 18, 2008. No additional fees are required.

Patentees request recalculation of the patent term adjustment based on the decision in Wyeth v. Dudas, 580 F. Supp. 2d 138, 88

U.S.P.Q. 2d 1538 (D.D.C. 2008). Patentee asserts that in view of the decision in Wyeth, they are entitled to a total patent term adjustment of 1179 days.
Applicants assert the following:

"A" delays= 674
"B" delays =613
"C" delays =0
Overlap between A and B is 5 days
Office delay is 103 days.

PTA =1179

The Office finds the following:

"A" delays= 674
"B" delays =613
"C" delays =0
Overlap between A and B is 5 days
Office delay is 102 days.

PTA=1180.

The Office finds that patentee erred in assessing one additional day of delay in the response filed by patentee on March 9, 2008. The delay begin on Jaunty 10, 2008, the day after the 3 month anniversary date and ended on March 9, 2008, a 60-day delay as found in the PTA calculation.

Since the Office is *sua sponte* issuing a certificate of correction on this decision, the patentee is provided an opportunity to be heard. Accordingly, patentee is given one month or thirty (30) days whichever is longer to respond to the determined certificate of correction. Nothing in this decision shall provide patentee an alternative time period to commence a civil action under 35 USC 154.

Telephone inquiries specific to this decision should be directed to Maria Nuzzolillo, Legal Advisor, at (571) 272-8150, or the undersigned at 571-272-7757.

/Kery A. Fries/

Kery A. Fries

Senior Legal Advisor
Office of Patent Legal Administration
Office of Deputy Commissioner
For Examination Policy

cc: Draft Certificate of Correction
Adjusted PTA calculation

UNITED STATES PATENT AND TRADEMARK OFFICE

CERTIFICATE OF CORRECTION

PATENT : 7,445,941 B2

DATED : November 4, 2008 **Draft**

INVENTOR(S) : Buechler

It is certified that error appears in the above-identified patent and that said Letters Patent is hereby corrected as shown below:

On the cover page,

[*] Notice: Subject to any disclaimer, the term of this patent is extended or adjusted under 35 USC 154(b) by (1180) days

Delete the phrase "by 572 days" and insert – by 1180 days--

Day : Thursday
Date: 7/22/2010

PALM INTRANET

Time: 11:51:29

PTA Calculations for Application: 10/792258			
Application Filing Date:	03/02/2004	PTO Delay (PTO):	674
Issue Date of Patent:	11/04/2008	Three Years:	0
Pre-Issue Petitions:	0	Applicant Delay (APPL):	102
Post-Issue Petitions:	0	Total PTA (days):	1180
PTO Delay Adjustment:	608		

File Contents History

Number	Date	Contents Description	PTO	APPL	START
75	07/22/2010	ADJUSTMENT OF PTA CALCULATION BY PTO	608		
71.5	10/15/2008	PTA 36 MONTHS			
71	11/04/2008	PATENT ISSUE DATE USED IN PTA CALCULATION			
70	10/02/2008	EXPORT TO FINAL DATA CAPTURE			
69	10/01/2008	DISPATCH TO FDC			
68	10/01/2008	APPLICATION IS CONSIDERED READY FOR ISSUE			
67	09/30/2008	ISSUE FEE PAYMENT VERIFIED			
66	09/30/2008	ISSUE FEE PAYMENT RECEIVED			
65	07/28/2008	FINISHED INITIAL DATA CAPTURE			
64	07/28/2008	CORRESPONDENCE ADDRESS CHANGE			
63	07/04/2008	EXPORT TO INITIAL DATA CAPTURE			
62	06/30/2008	MAIL NOTICE OF ALLOWANCE			
61	06/27/2008	ISSUE REVISION COMPLETED			
60	06/27/2008	DOCUMENT VERIFICATION			
59	06/27/2008	NOTICE OF ALLOWANCE DATA VERIFICATION COMPLETED			
58	06/27/2008	CASE DOCKETED TO EXAMINER IN GAU			
57	06/18/2008	NOTICE OF ALLOWABILITY			
56	06/16/2008	EXAMINER INTERVIEW SUMMARY RECORD (PTOL - 413)			
51	04/23/2008	CHANGE IN POWER OF ATTORNEY (MAY INCLUDE ASSOCIATE POA)			
50	04/21/2008	CORRESPONDENCE ADDRESS CHANGE			
49	04/10/2008	DATE FORWARDED TO EXAMINER			
48	03/09/2008	RESPONSE AFTER NON-FINAL ACTION		60	46

47	03/09/2008	REQUEST FOR EXTENSION OF TIME - GRANTED			
46	10/09/2007	MAIL NON-FINAL REJECTION			
45	10/01/2007	NON-FINAL REJECTION			
44	08/28/2007	INFORMATION DISCLOSURE STATEMENT CONSIDERED			
43	08/28/2007	REFERENCE CAPTURE ON IDS			
42	08/28/2007	INFORMATION DISCLOSURE STATEMENT (IDS) FILED		42	39
41	08/28/2007	INFORMATION DISCLOSURE STATEMENT (IDS) FILED			
40	07/18/2007	DATE FORWARDED TO EXAMINER			
39	07/17/2007	RESPONSE AFTER NON-FINAL ACTION			
38	06/25/2007	MAIL NON-FINAL REJECTION			
37	06/11/2007	NON-FINAL REJECTION			
36	01/13/2006	INFORMATION DISCLOSURE STATEMENT CONSIDERED			
35	06/09/2004	INFORMATION DISCLOSURE STATEMENT CONSIDERED			
34	05/02/2006	INFORMATION DISCLOSURE STATEMENT CONSIDERED			
33	03/26/2007	AMENDMENT CROSSED IN MAIL			
32	05/04/2007	DATE FORWARDED TO EXAMINER			
31	04/30/2007	RESPONSE TO ELECTION / RESTRICTION FILED			
30	04/30/2007	REQUEST FOR EXTENSION OF TIME - GRANTED			
29	03/07/2007	MAIL RESTRICTION REQUIREMENT	674		-1
28	03/05/2007	REQUIREMENT FOR RESTRICTION / ELECTION			
27	01/12/2007	CASE DOCKETED TO EXAMINER IN GAU			
26	05/02/2006	REFERENCE CAPTURE ON IDS			
25.7	05/02/2006	INFORMATION DISCLOSURE STATEMENT (IDS) FILED			
25	05/02/2006	INFORMATION DISCLOSURE STATEMENT (IDS) FILED			
24	01/13/2006	REFERENCE CAPTURE ON IDS			
23.7	01/13/2006	INFORMATION DISCLOSURE STATEMENT (IDS) FILED			
23	01/13/2006	INFORMATION DISCLOSURE STATEMENT (IDS) FILED			
22	07/23/2004	MISCELLANEOUS INCOMING LETTER			
21	06/09/2004	REFERENCE CAPTURE ON IDS			
20.7	06/09/2004	INFORMATION DISCLOSURE STATEMENT (IDS)			

		FILED			
20	06/09/2004	INFORMATION DISCLOSURE STATEMENT (IDS) FILED			
19	03/02/2004	PRELIMINARY AMENDMENT			
18	01/09/2006	IFW TSS PROCESSING BY TECH CENTER COMPLETE			
17	01/09/2006	CASE DOCKETED TO EXAMINER IN GAU			
16	02/11/2005	APPLICATION RETURN FROM OIPE			
15	02/11/2005	APPLICATION RETURN TO OIPE			
14	02/11/2005	APPLICATION DISPATCHED FROM OIPE			
13	02/11/2005	APPLICATION IS NOW COMPLETE			
12	07/23/2004	ADDITIONAL APPLICATION FILING FEES			
11	07/23/2004	A STATEMENT BY ONE OR MORE INVENTORS SATISFYING THE REQUIREMENT UNDER 35 USC 115, OATH OF THE APPLIC			
10	07/23/2004	APPLICANT HAS SUBMITTED NEW DRAWINGS TO CORRECT CORRECTED PAPERS PROBLEMS			
9	07/23/2004	AFFIDAVIT(S) (RULE 131 OR 132) OR EXHIBIT(S) RECEIVED			
8	07/23/2004	PRELIMINARY AMENDMENT			
7	07/23/2004	WORKFLOW INCOMING AMENDMENT IFW			
6	05/25/2004	NOTICE MAILED--APPLICATION INCOMPLETE--FILING DATE ASSIGNED			
4	04/01/2004	CLEARED BY OIPE CSR			
3	04/01/2004	CASE CLASSIFIED BY OIPE			
2	03/18/2004	IFW SCAN & PACR AUTO SECURITY REVIEW			
1	03/02/2004	INITIAL EXAM TEAM NN			

Search Another: Application# [ ] Search

EXPLANATION OF PTA CALCULATION

EXPLANATION OF PTE CALCULATION

To go back, right click here and select Back. To go forward, right click here and select Forward. To refresh, right click here and select Refresh.

Back to OASIS | Home page

UNITED STATES PATENT AND TRADEMARK OFFICE

Commissioner for Patents
United States Patent and Trademark Office
P.O. Box 1450
Alexandria, VA 22313-1450
www.uspto.gov

HUNTON & WILLIAMS LLP
INTELLECTUAL PROPERTY DEPARTMENT
1900 K STREET, N.W.
SUITE 1200
WASHINGTON DC 20006-1109

COPY MAILED

OCT 10 2006

OFFICE OF PETITIONS

In re Application of :
Ruey Yu et al. :
Application No. 10/792,273 : DECISION ON PETITION
Filed: March 4, 2004 : TO MAKE SPECIAL UNDER
Attorney Docket No. 59210.000046 : 37 CFR 1.102(c)(1)
:

This is a decision on the petition under 37 CFR 1.102(c)(1), filed July 6, 2006, to make the above-identified application special based on applicant's age as set forth in M.P.E.P. § 708.02, Section IV.

The petition is **GRANTED**.

A grantable petition to make an application special under 37 CFR 1.102(c)(1) and MPEP § 708.02, Section IV: Applicant's Age, must be accompanied by evidence showing that at least one of the applicants is 65 years of age, or more, such as a birth certificate or a statement by applicant. No fee is required.

The instant petition includes a signed Declaration under 37 C.F.R 1.102(c)(1) stating that applicants are over 65 years of age. Accordingly, the above-identified application has been accorded "special" status.

Telephone inquiries concerning this decision should be directed to Charles Smoot at 571-272-3299.

All other inquiries concerning either the examination or status of the application should be directed to the Technology Center.

The application is being forwarded to the Technology Center Art Unit 1614 for action on the merits commensurate with this decision.

David Bucci
Petitions Examiner
Office of Petitions

UNITED STATES PATENT AND TRADEMARK OFFICE

COMMISSIONER FOR PATENTS
UNITED STATES PATENT AND TRADEMARK OFFICE
P.O. BOX 1450
ALEXANDRIA, VA 22313-1450
www.uspto.gov

Nixon Peabody LLP
401 9th Street, N. W.
Suite 900
Washington, DC 20004-2128

COPY MAILED

AUG 3 0 2004

OFFICE OF PETITIONS

In re Application of :
Michael R. Bowman, et al. :
Application No. 10/792,280 : DECISION ON PETITION
Filed: March 4, 2004 : UNDER 37 CFR 1.78(a)(6)
Attorney Docket No. 031896-29000

This is a decision on the petition under 37 CFR 1.78(a)(6), filed July 26, 2004, to accept an unintentionally delayed claim under 35 U.S.C. §119(e) for the benefit of the prior-filed provisional application set forth in the concurrently filed amendment.

The petition is **GRANTED**.

A petition under 37 CFR 1.78(a)(6) is only applicable to those applications filed on or after November 29, 2000. Further, the petition is appropriate only after expiration of the period specified in 37 CFR 1.78(a)(5)(ii) and must be filed during the pendency of the nonprovisional application. In addition, the petition must be accompanied by:

(1) the reference required by 35 U.S.C. § 119(e) and 37 CFR 1.78(a)(5)(i) to the prior-filed application, unless previously submitted;
(2) the surcharge set forth in § 1.17(t); and
(3) a statement that the entire delay between the date the claim was due under 37 CFR 1.78(a)(5)(ii) and the date the claim was filed was unintentional. The Commissioner may require additional information where there is a question whether the delay was unintentional.

The instant pending nonprovisional application was filed on March 4, 2004, within twelve months of the filing date of the prior-filed provisional applications, Application No. 60/451,396 and Application No. 60/475,870, which were filed on March 4, 2003 and June 5, 2003,

respectively, for which priority is claimed. A reference to the prior-filed provisional applications has been included in an Application Data Sheet submitted with the instant petition.

The instant nonprovisional application was filed after November 29, 2000, and the claim for priority herein is submitted after expiration of the period specified in 37 CFR 1.78(a)(5)(ii). Also, the reference to the prior-filed provisional application was submitted during the pendency of the nonprovisional application for which the benefit is sought. *See* 35 U.S.C. §119(e). Accordingly, having found that the instant petition satisfies the conditions of 37 CFR 1.78(a)(6) for acceptance of an unintentionally delayed claim for priority under 35 U.S.C. §119(e), the petition to accept an unintentionally delayed claim of benefit to prior-filed provisional Application No. 60/451,396 and Application No. 60/475,870 is granted.

The granting of the petition to accept the delayed benefit claim to the prior-filed application under 37 CFR 1.78(a)(6) should not be construed as meaning that the instant application is entitled to the benefit of the filing date of the prior-filed application. In order for the instant application to be entitled to the benefit of the prior-filed application, all other requirements under 35 U.S.C. §119(e) and 37 CFR 1.78(a)(4) and (a)(5) must be met. Similarly, the fact that the corrected Filing Receipt accompanying this decision on petition includes the prior-filed application should not be construed as meaning that applicant is entitled to the claim for benefit of priority to the prior-filed application noted thereon. Accordingly, the examiner will, in due course, consider this benefit claim and determine whether the instant application is entitled to the benefit of the earlier filing date.

A corrected Filing Receipt, which includes the priority claim to the prior-filed provisional application, was mailed to applicant on August 17, 2004.

Any inquiries concerning this decision may be directed to Marianne Jenkins at (703) 306-3475.

The application is being forwarded to Technology Center Art Unit 1653 for examination, including consideration by the examiner of the claim under 35 U.S.C. §119(e) for the benefit of priority to prior-filed provisional Application Nos. 60/451,396 and 60/475,870.

Frances Hicks

Frances M. Hicks
Lead Petitions Examiner
Office of Petitions
Office of the Deputy Commissioner
for Patent Examination Policy

UNITED STATES PATENT AND TRADEMARK OFFICE

COMMISSIONER FOR PATENTS
UNITED STATES PATENT AND TRADEMARK OFFICE
P.O. BOX 1450
ALEXANDRIA, VA 22313-1450
www.uspto.gov

DONALD BOLLELLA
DB TECHNICAL CONSULTING
126 ALMADOR
IRVINE, CA 92614

COPY MAILED

DEC 29 2004

OFFICE OF PETITIONS

In re Application of :
Coombs, et al. :
Application No. 10/792,291 : DECISION REFUSING STATUS
Filed: March 2, 2004 : UNDER 37 CFR § 1.47(a)
Attorney Docket No. NAGACO.074A :
For: METHODS AND APPARATUS FOR USE :
IN DETECTION AND QUANTIFICATION OF :
VARIOUS CELL TYPES AND USE OF OPTICAL:
BIO-DISK FOR PERFORMING SAME :

This is a decision on the petition styled "Petition To File Declarations on Behalf of Nonsigning Inventors Who Refuse to Sign or Cannot be Reached Under 37 CFR 1.47(a)," filed October 25, 2004.

The petition is **DISMISSED**.

Rule 47 applicant is given **TWO MONTHS** from the mailing date of this decision to reply, correcting the below-noted deficiencies. Any reply should be entitled "Request for Reconsideration of Petition Under 37 C.F.R. §1.47(a)," and should only address the deficiencies noted below, except that the reply may include an oath or declaration executed by the non-signing inventor. **Failure to respond will result in abandonment of the application.** Any extensions of time will be governed by 37 C.F.R. § 1.136(a).

The above-identified application was filed on March 2, 2004, without an executed oath or declaration and missing the statutory basic filing fee. Accordingly, on May 25, 2004, applicants were mailed a "Notice to File Missing Parts of Nonprovisional Application," requiring submission of an executed oath or declaration, payment of the filing fee, additional claim fees and payment of the surcharge for late filing under § 1.16(e).

In response, rule 47 applicants filed the instant petition, along with payment of the petition fee, the basic filing fee, additional claim fees and the late surcharge. This response was made timely

by an accompanying petition (and fee) for extension of time within the third month. On petition, applicants assert that status under § 1.47(a) is proper because inventors Gordon and Urcia refuse to join in the application. In support thereof, applicant submits a statement of facts by patent attorney Russell Jeide.

A grantable petition under 37 C.F.R. § 1.47(a) requires: (1) proof that the non-signing inventor cannot be reached or found, after diligent effort, or refuses to sign the oath or declaration after having been presented with the application papers (specification, claims and drawings); (2) an acceptable oath or declaration in compliance with 35 U.S.C. §§115 and 116; (3) the petition fee; and (4) a statement of the last known address of the non-signing inventor. The instant petition does not satisfy requirement (2).

Pursuant to 35 U.S.C. 115 and 37 CFR § 1.63(a) and § 1.63(c)(1), an acceptable oath or declaration filed under § 1.51(b)(2) as a part of a nonprovisional application must identify all the inventors by name, citizenship and, unless such information is supplied on an application data sheet (ADS) in accordance with § 1.76, must also identify the mailing address, and the residence of each inventor, if an inventor lives at a location which is different from where the inventor customarily receives mail.

Petitioner has shown that the non-signing inventors Gordon and Urcia have refused to join in the filing of the above-identified application after having been presented with the application papers. The petition includes payment of the petition fee and includes a statement of the last known address of non-signing inventors Gordon and Urcia. However, the petition does not include an acceptable declaration.

The Office received a two-page declaration on October 25, 2004, identifying James H. Coombs, John F. Gordon and Brigitte C. Phan as the joint inventors. The declaration does not identify Joseph R.I. Urcia as one of the joint inventors. The petition cannot be granted until an acceptable declaration in compliance with §§ 1.63(a) and 1.63(c)(1) is filed.

Further correspondence with respect to this matter should be addressed as follows:

By mail:
Mail Stop PETITION
Commissioner for Patents
Post Office Box 1450
Alexandria, VA 22313-1450

By hand:
U.S. Patent and Trademark Office
220 20th Street S.
Customer Window, Mail Stop PETITION
Crystal Plaza Two, Lobby, Room 1B03
Arlington, VA 22202

The centralized facsimile number is **(703) 872-9306**.

Any questions concerning this matter may be directed to the undersigned at (571) 272-3204.

Sherry D. Brinkley
Petitions Examiner
Office of Petitions
Office of the Deputy Commissioner
for Patent Examination Policy

UNITED STATES PATENT AND TRADEMARK OFFICE

COMMISSIONER FOR PATENTS
UNITED STATES PATENT AND TRADEMARK OFFICE
P.O. BOX 1450
ALEXANDRIA, VA 22313-1450
www.uspto.gov

DONALD BOLLELLA
DB TECHNICAL CONSULTING
126 ALMADOR
IRVINE, CA 92614

COPY MAILED

SEP 0 1 2005

OFFICE OF PETITIONS

In re Application of
Coombs, et al.
Application No. 10/792,291
Filed: March 2, 2004
Attorney Docket No.: NAGACO.074A

DECISION ACCORDING STATUS
UNDER 37 CFR 1.47(a)

This is a decision on the "Request for Reconsideration of Petition under 37 CFR § 1.47(a)" filed March 3, 2005.

The petition is **GRANTED**.

The above-identified application was filed on March 2, 2004, without an executed oath or declaration. James H., Coombs, John F. Gordon, Brigitte C. Phan and Joseph R. I. Urcia were named as joint inventors. In response to a Notice to File Missing Parts of Nonprovisional Application, mailed May 25, 2004, applicants filed the initial petition under §1.47(a)(and fee) and late surcharge under §1.16(e).

However, the petition was dismissed because the declaration submitted was not acceptable because it was not executed by all of the available joint inventors on behalf of themselves and on behalf of the nonsigning inventors John F. Gordon and Joseph R. I. Urcia.

The present petition includes declarations executed in combination by all of the available joint inventors on behalf of themselves and nonsigning joint inventors John F. Gordon and Joseph R. I. Urcia.

The declarations and the petition have been reviewed and found in compliance with 37 C.F.R. § 1.47(a).

This application is hereby accorded Rule 1.47(a) status.

As provided in new Rule 1.47(c), this Office will forward notice of this application's filing to the non-signing inventors at the address given in the petition. Notice of the filing of this application will also be published in the Official Gazette.

The application file is being forwarded to Technology Center 1641 for appropriate action, including notifying applicant of the new status of this application.

Telephone inquiries regarding this decision should be directed to the undersigned at (571) 272-3204.

Sherry D. Brinkley
Petitions Examiner
Office of Petitions

UNITED STATES PATENT AND TRADEMARK OFFICE

COMMISSIONER FOR PATENTS
UNITED STATES PATENT AND TRADEMARK OFFICE
P.O. BOX 1450
ALEXANDRIA, VA 22313-1450
www.uspto.gov

MR. JOHN F. GORDON
20 NEW JERSEY
IRVINE, CA 92606

COPY MAILED

SEP 0 1 2005

OFFICE OF PETITIONS

In re Application of
James H. Coombs, et al.
Application No. 10/792,291
Filed: March 2, 2004
For: METHODS AND APPARATUS FOR USE IN DETECTION AND QUANTITATION OF VARIOUS CELL TYPES AND USE OF OPTICAL BIO-DISC FOR PERFORMING SAME

LETTER

Dear Mr. Gordon:

You are named as a joint inventor in the above-identified United States patent application filed under the provisions of 35 U.S.C. 116 (United States Code) and 37 CFR 1.47(a), Rules of Practice in Patent Cases. Should a patent be granted on the application you will be designated therein as a joint inventor.

As a named inventor you are entitled to inspect any paper in the file wrapper of the application, order copies of all or any part thereof (at a prepaid cost per 37 CFR 1.19) or make your position of record in the application. Alternatively, you may arrange to do any of the preceding through a registered patent attorney or agent presenting written authorization from you. If you care to join the application, counsel of record (see below) would presumably assist you. Joining in the application would entail the filing of an appropriate oath or declaration by you pursuant to 37 CFR 1.63.

Telephone inquiries regarding this communication should be directed to the undersigned at (571) 272-3204. Requests for information regarding your application should be directed to the File Information Unit at (703) 308-2733. Information regarding how to pay for and order a copy of the application, or a specific paper in the application should be directed to the Certification Division at (703) 308-9726 or 1-800-972-6382 (outside the Washington D.C. area).

Sherry D. Brinkley
Petitions Examiner
Office of Petitions
Office of the Deputy Commissioner
For Patent Examination Policy

cc: DONALD BOLLELLA
DB TECHNICAL CONSULTING
126 ALMADOR
IRVINE CA 92614

UNITED STATES PATENT AND TRADEMARK OFFICE

COMMISSIONER FOR PATENTS
UNITED STATES PATENT AND TRADEMARK OFFICE
P.O. BOX 1450
ALEXANDRIA, VA 22313-1450
www.uspto.gov

MR. JOSEPH R. I. URCIA
8511 MARION AVENUE
WESTMINSTER, CA 92683

COPY MAILED

SEP 0 1 2005

OFFICE OF PETITIONS

In re Application of
James H. Coombs, et al.
Application No. 10/792,291
Filed: March 2, 2004
For: METHODS AND APPARATUS FOR USE IN DETECTION AND QUANTITATION OF VARIOUS CELL TYPES AND USE OF OPTICAL BIO-DISC FOR PERFORMING SAME

LETTER

Dear Mr. Urcia:

You are named as a joint inventor in the above-identified United States patent application filed under the provisions of 35 U.S.C. 116 (United States Code) and 37 CFR 1.47(a), Rules of Practice in Patent Cases. Should a patent be granted on the application you will be designated therein as a joint inventor.

As a named inventor you are entitled to inspect any paper in the file wrapper of the application, order copies of all or any part thereof (at a prepaid cost per 37 CFR 1.19) or make your position of record in the application. Alternatively, you may arrange to do any of the preceding through a registered patent attorney or agent presenting written authorization from you. If you care to join the application, counsel of record (see below) would presumably assist you. Joining in the application would entail the filing of an appropriate oath or declaration by you pursuant to 37 CFR 1.63.

Telephone inquiries regarding this communication should be directed to the undersigned at (571) 272-3204. Requests for information regarding your application should be directed to the File Information Unit at (703) 308-2733. Information regarding how to pay for and order a copy of the application, or a specific paper in the application should be directed to the Certification Division at (703) 308-9726 or 1-800-972-6382 (outside the Washington D.C. area).

Sherry D. Brinkley
Petitions Examiner
Office of Petitions
Office of the Deputy Commissioner
For Patent Examination Policy

cc: DONALD BOLLELLA
DB TECHNICAL CONSULTING
126 ALMADOR
IRVINE CA 92614

UNITED STATES PATENT AND TRADEMARK OFFICE

UNITED STATES DEPARTMENT OF COMMERCE
United States Patent and Trademark Office
Address: COMMISSIONER FOR PATENTS
P.O. Box 1450
Alexandria, Virginia 22313-1450
www.uspto.gov

APPLICATION NO.	FILING DATE	FIRST NAMED INVENTOR	ATTORNEY DOCKET NO.	CONFIRMATION NO.
10/792,297	03/04/2004	Fumiko Shiraishi	Q80180	3153

23373 7590 04/14/2008

SUGHRUE MION, PLLC
2100 PENNSYLVANIA AVENUE, N.W.
SUITE 800
WASHINGTON, DC 20037

EXAMINER	
SHEEHAN, JOHN P	

ART UNIT	PAPER NUMBER
1793	

MAIL DATE	DELIVERY MODE
04/14/2008	PAPER

Please find below and/or attached an Office communication concerning this application or proceeding.

The time period for reply, if any, is set in the attached communication.

UNITED STATES PATENT AND TRADEMARK OFFICE

Commissioner for Patents
United States Patent and Trademark Office
P.O. Box 1450
Alexandria, VA 22313-1450
www.uspto.gov

wk

4-14-08

In re application of :
Fumiko Shiraishi, et al. : DECISION ON
Serial No. 10/792,297 : PETITION
Filed: March 4, 2004 :
For: Method Of Manufacturing Magnetic Particle, Magnetic Particle And Magnetic Recording Medium

This is a decision on the petition filed on February 11, 2008. The petition requests to reset the period for Reply from the office action mailed on November 23, 2007. Applicants assert that the actual date of receipt of the Office Action was February 8, 2008.

DECISION

The instant request is accepted as a timely petition under 37 C.F.R. 1.181 (no fee), and is evaluated under the procedures regarding an acceptable showing of non-receipt of an office action, TMOG 1156 O.G. 53, November 16, 1993, (see also MPEP 711.03(c) - NEW PROCEDURE TMOG 1170 O.G. 114). A review of the petitioner's evidence indicates that the request has merit. The evidence presented is sufficient to establish that the applicant or any authorized representative of the applicant did not receive the office action mailed on November 23, 2007 until February 8, 2008.

The period for response will be set from a date of February 7, 2008

The Petition is **GRANTED**.

Jacqueline M. Stone

Jacqueline Stone, Director
Technology Center 1700
Chemical and Materials Engineering

Keiko K. Takagi
SUGHRUE MION, PLLC
2100 PENNSYLVANIA AVENUE, N.W.
SUITE 800
WASHINGTON DC 20037

SPE RESPONSE FOR CERTIFICATE OF CORRECTION

DATE : 4/4/06 7/25/06

Paper No.: ____

TO SPE OF : ART UNIT 3636

SUBJECT : Request for Certificate of Correction for Appl. No.: 10/792309 Patent No.: 6932430 B2

Please respond to this request for a certificate of correction within 7 days.

Please review the requested changes/corrections as shown in the **COCIN** document(s) in the IFW application image. No new matter should be introduced, nor should the scope or meaning of the claims be changed.

Please complete the response (see below) and forward the completed response to scanning using document code **COCX**.

Virginia Tolbert
Certificates of Correction Branch

703-308-9390 ext. 113

Thank You For Your Assistance

The request for issuing the above-identified correction(s) is hereby:
Note your decision on the appropriate box.

☒ **Approved**	**All** changes apply.
☐ **Approved in Part**	Specify below which changes **do not** apply.
☐ **Denied**	State the reasons for denial below.

Comments: _____

DAVID DUNN
SUPERVISORY PATENT EXAMINER

SPE

3636
Art Unit

United States
Patent And
Trademark Office

P.O. Box 1450, Alexandria, Virginia 22313-1450 – www.uspto.gov

PETITION DECISION

07/30/04

Fay, Sharpe, Fagan, Minnich & McKee, LLP
1100 Superior Avenue
Seventh Floor
Cleveland, OH 44114-2518

Dear Applicant:

The Box PG Pub replacement drawings for application number 10/792312 received on 03/31/04 by the U. S. Patent and Trademark Office will be included for patent publication.

Telephone inquiries should be directed to Kaletus King, Office of Pre-Grant Publication 703 605-4283.

Kaletus King

Signature of Reviewer, Office of Pre-Grant Publication

BEST AVAILABLE COPY