UNITED STATES PATENT AND TRADEMARK OFFICE

UNITED STATES DEPARTMENT OF COMMERCE
United States Patent and Trademark Office
Address: COMMISSIONER FOR PATENTS
P.O. Box 1450
Alexandria, Virginia 22313-1450
www.uspto.gov

PERKINS COIE LLP/MSFT
P. O. BOX 1247
SEATTLE, WA 98111-1247

Mail Date: 04/20/2010

Applicant	: Rao Salapaka	: DECISION ON REQUEST FOR
Patent Number	: 7574736	: RECALCULATION of PATENT
Issue Date	: 08/11/2009	: TERM ADJUSTMENT IN VIEW
Appliction No	: 10/792,349	: OF WYETH AND NOTICE OF INTENT TO
Filed	: 03/03/2004	: ISSUE CERTIFICATE OF CORRECTION
		:

The Request for Recalculation is **GRANTED** to the extent indicated.

The patent term adjustment has been determined to be **844** days. The USPTO will *sua sponte* issue a certificate of correction reflecting the amount of PTA days determined by the recalculation.

Prior to the issuance of the certificate of correction, the USPTO will afford patentee an opportunity to be heard and request reconsideration. Accordingly, patentee has **one month or thirty (30) days**, whichever is longer, to file a request for reconsideration of this patent term adjustment calculation. See 35 U.S.C. 154(b)(3)(B)(ii) and 37 CFR 1.322(a)(4). No extensions of time will be granted under 37 CFR 1.136.

Patentee should use document code PET.OP if electronically filing a request for reconsideration of this patent term adjustment calculation. The patentee must also include the information required by 37 CFR 1.705(b)(2) and the fee required by 37 CFR 1.18(e). If patentee does not file a timely request for reconsideration of this patent term adjustment calculation including the information required by 37 CFR 1.705(b)(2) and the fee required by 37 CFR 1.18(e), the USPTO will issue a certificate of correction reflecting the PTA determination noted above.

Patentee should be aware that in order to preserve the right to review in the United States District Court for the District of Columbia of the USPTO patent term adjustment determination, patentee must ensure that he or she also take the steps required under 35 U.S.C. 154(b)(4)(A) in a timely manner. Nothing in the request for recalculation should be construed as providing an alternative time frame for commencing a civil action under 35 U.S.C. 154(b)(4)(A).

Any questions concerning this decision should be directed to the Office of Patent Legal Administration at 571-272-7702.

UNITED STATES PATENT AND TRADEMARK OFFICE

Commissioner for Patents
United States Patent and Trademark Office
P.O. Box 1450
Alexandria, VA 22313-1450
www.uspto.gov

MAX KADIU
19694 AUBURN DR
CUPERTINO, CA 95014

COPY MAILED

MAY 17 2007

OFFICE OF PETITIONS

In re Application of :
Max Kadiu :
Application No. 10/792,354 : ON PETITION
Filed: March 2, 2004 :
Attorney Docket No. :

This is a decision on the petition, filed August 22, 2006, under 37 CFR 1.137(b) to revive the above-identified application.

The petition is **DISMISSED.**

Any request for reconsideration of this decision must be submitted within TWO (2) MONTHS from the mail date of this decision. Extensions of time under 37 CFR 1.136(a) are permitted. The reconsideration request should include a cover letter entitled "**Renewed Petition under 37 CFR 1.137(b)**." This is **not** final agency action within the meaning of 5 U.S.C. § 704.

The above-identified application became abandoned for failure to reply in a timely manner to the final Office action mailed December 12, 2005, which set a shortened statutory period for reply of three (3) months. No extension of time under the provisions of 37 CFR 1.136(a) were obtained. Accordingly, the above-identified application became abandoned on March 13, 2006.

A grantable petition under 37 CFR 1.137(b) must be accompanied by: (1) the required reply, unless previously filed; (2) the petition fee as set forth in 37 CFR 1.17(m); (3) a statement that the entire delay in filing the required reply from the due date for the reply until the filing of a grantable petition pursuant to 37 CFR 1.137(b) was unintentional; and (4) any terminal disclaimer (and fee as set forth in 37 CFR 1.20(d)) required by 37 CFR 1.137(c). Where there is a question as to whether either the abandonment or the delay in filing a petition under 37 CFR 1.137 was unintentional, the Commissioner may require additional information. See MPEP 711.03(c)(III)(C) and (D). The instant petition lack(s) item(s) (2).

The fee for a Petition for Revival of an Application for Patent Abandoned Unintentionally Under 37 CFR 1.137(b) is $750 (small entity). Petitioner submitted $700 with the petition on August 22, 2006. Therefore, this application cannot be revived until the $50 balance is received.

Further correspondence with respect to this matter should be addressed as follows:

By mail: Mail Stop PETITIONS
Commissioner for Patents
Post Office Box 1450
Alexandria, VA 22313-1450

By hand: Customer Service Window
Randolph Building
401 Dulany Street
Alexandria, VA 22314

By facsimile: (571) 273-8300
ATTN: Office of Petitions

Telephone inquiries concerning this decision should be directed to the undersigned at (571) 272-3210.

Irvin Dingle
Petitions Examiner
Office of Petitions

UNITED STATES PATENT AND TRADEMARK OFFICE

Commissioner for Patents
United States Patent and Trademark Office
P.O. Box 1450
Alexandria, VA 22313-1450
www.uspto.gov

COPY MAILED

SEP 19 2007

OFFICE OF PETITIONS

MAX KADIU
19694 AUBURN DR
CUPERTINO, CA 95014

In re Application of	:	
Max Kadiu	:	
Application No. 10/792,354	:	ON PETITION
Filed: March 2, 2004	:	
Attorney Docket No.	:	

This is a decision on the renewed petition filed May 25, 2007 under 37 CFR 1.137(b), to revive the above-identified application.

The petition is **GRANTED.**

Telephone inquiries concerning this decision should be directed to the undersigned at (571) 272-3210.

This matter is being referred to Technology Center AU 3671 for further processing.

Irvin Dingle
Petitions Examiner
Office of Petitions

UNITED STATES PATENT AND TRADEMARK OFFICE

COMMISSIONER FOR PATENTS
UNITED STATES PATENT AND TRADEMARK OFFICE
P.O. BOX 1450
ALEXANDRIA, VA 22313-1450
www.uspto.gov

DAVID M. SOLAK
4805 MAPLE HILL DRIVE
SEVEN HILLS OH 44131

COPY MAILED

JUL 13 2007

OFFICE OF PETITIONS

In re Application of	:	
David M. Solak	:	
Application No. 10/792,357	:	DECISION ON PETITION
Filed: March 4, 2004	:	
For: RF SMOKE SENSING SYSTEM	:	
WITH INTEGRATED SMOKE/HEAT	:	
SENSING CHRISTMAS ORNAMENT	:	
TRANSMITTER	:	

This is a decision on the petition under the unintentional provisions of 37 CFR 1.137(b), filed October 30, 2006, to revive the above-identified application.

The petition is **DISMISSED**.

Any request for reconsideration of this decision must be submitted within TWO (2) MONTHS from the mail date of this decision. Extensions of time under 37 CFR 1.136(a) are permitted. The reconsideration request should include a cover letter entitled "Renewed Petition under 37 CFR 1.137(b)." This is **not** a final agency action within the meaning of 5 U.S.C. § 704.

The application became abandoned for failure to timely reply within the meaning of 37 CFR 1.113 to the final Office action, mailed February 6, 2006, which set a shortened statutory period for reply of three (3) months. A two (2) month extension of time under the provisions of 37 CFR 1.136(a) was obtained. Accordingly, the application became abandoned on July 7, 2006. A Notice of Abandonment was mailed on September 26, 2006.

A petition under 37 CFR 1.137(b) must be accompanied by: (1) the required reply, unless previously filed; (2) the petition fee as set forth in 37 CFR 1.17(m); (3) a statement that the entire delay in filing the required reply from the due date for the reply until the filing of a grantable petition pursuant to 37 CFR 1.137(b) was unintentional; and (4) any terminal disclaimer (and

fee as set forth in 37 CFR 1.20(d)) required by 37 CFR 1.137(d). Where there is a question as to whether either the abandonment or the delay in filing a petition under 37 CFR 1.137 was unintentional, the Director may require additional information. *See* MPEP 711.03(c)(II)(C).

The petition fails to satisfy items (1) and (3) above.

As to item (1) above, the reply submitted with the petition is a Notice of Appeal and fee of $250. However, the $250 fee submitted was returned as unpaid. Accordingly, the Notice of Appeal is improper.

As to item (3), the statement of unintentional delay is not acceptable at this time since it appears that this application was intentionally abandoned. In this regard, the following statement appears in a communication received by applicant on August 4, 2006: "The reason I am filing for extension is: Upon planning to abandon I learned of the possibility of actually being able to file a CIP * * * I am respectfully confident that I may have a good chance of receiving the patent through the CIP process."

A review of the records for this application indicate that a continuation-in-part application (Application No. 11/799,905) was filed on May 4, 2007 and was not filed within the extendable period set in the final Office action of February 6, 2006. It appears now that applicant is attempting to proceed with prosecution in this application by the filing of a Notice of Appeal, albeit improper for the reason stated above, despite his intent to abandon the application in favor of the filing of a continuation-in-part application. Any petition under 37 CFR 1.137(b) must satisfy the requirement that "the entire delay in filing the required reply from the due date for the reply until the filing of a grantable petition pursuant to 37 CFR 1.137(b) was unintentional." The Office may require the filing of a continuing application to meet the reply requirement of 37 CFR 1.137(b)(2), especially where, as here, applicant intended to file a continuation-in-part application rather than proceed with prosecution of this application. While applicant intended to abandon this application but not the invention by his intent to file a continuation-in-part application, the statement of unintentional delay will only be accepted if the reply to continue prosecution is a statement that revival of this application is requested solely to establish copendency with the continuation-in-part application (Application No. 11/799,905, filed May 4, 2007).

Further, as the check for the Notice of Appeal fee was returned as unpaid, a $50 fee for the returned check is required.

The request to change the correspondence address signed by John D. Gugliotta will not be entered since there is no indication that a power of attorney by applicant to Mr. Gugliotta or the attorneys associated with Customer Number 33055 was ever submitted in this application.

Further correspondence with respect to this matter should be addressed as follows:

By Mail: Mail Stop PETITION
Commissioner for Patents
P. O. Box 1450
Alexandria, VA 22313-1450

By hand: U. S. Patent and Trademark Office
Customer Service Window, Mail Stop Petitions
Randolph Building
401 Dulany Street
Alexandria, VA 22314

The centralized facsimile number is **(571) 273-8300.**

Correspondence regarding this decision may also be filed through the Electronic Filing System of the USPTO.

To expedite consideration, petitioner may wish to contact the undersigned regarding the filing of the renewed petition under 37 CFR 1.137(b).

Telephone inquiries concerning this decision should be directed to the undersigned at (571) 272-2318.

Frances Hicks
Petitions Examiner
Office of Petitions

UNITED STATES PATENT AND TRADEMARK OFFICE

Commissioner for Patents
United States Patent and Trademark Office
P.O. Box 1450
Alexandria, VA 22313-1450
www.uspto.gov

DEC 01 2005

MCHALE & SLAVIN, P.A.
2855 PGA BLVD
PALM BEACH GARDENS FL 33410

In re Application of	:	
Robert L. Diaz et al.	:	
Serial No.: 10/792,399	:	DECISION ON PETITION
Filed: March 2, 2004	:	
For: Spinal Implant	:	

This is in response to applicants' petition filed October 19, 2005 to make the above-identified application special under the provisions of 37 CFR 1.102(c), based on the age of the applicant.

Applicant has satisfied the provisions set forth in M.P.E.P. 708.02, IV. Therefore the petition is **GRANTED**.

The application will be forwarded to the examiner for action on the merits commensurate with this decision.

Should there be any questions with regard to this letter please contact Frederick Schmidt by letter addressed to the Director, Technology Center 3700, P.O. Box 1450 Alexandria, VA 22313-1450, or by telephone at (571) 272-2975 or by facsimile transmission at (571) 273-8300.

Frederick R. Schmidt

Frederick R. Schmidt, Director
Technology Center 3700

UNITED STATES PATENT AND TRADEMARK OFFICE

Commissioner for Patents
United States Patent and Trademark Office
P.O. Box 1450
Alexandria, VA 22313-1450
www.uspto.gov

DIGIMARC CORPORATION
9405 SW GEMINI DRIVE
BEAVERTON OR 97008

COPY MAILED

SEP 30 2004

OFFICE OF PETITIONS

In re Application of
Geoffrey B. Rhoads
Application No. 10/792,400
Filed: March 2, 2004
Attorney Docket No. P0944

: DECISION ON PETITIONS
: UNDER 37 CFR 1.78(a)(3) AND
: UNDER 37 CFR 1.78(a)(6)

This is a decision on the petition under 37 CFR §§ 1.78(a)(3) and 1.78(a)(6), filed August 30, 2004, to accept an unintentionally delayed claim under 35 U.S.C. §§ 120 and 119(e) for the benefit of the prior-filed nonprovisional and provisional applications set forth in the concurrently filed amendment.

The petition is **GRANTED**.

A petition for acceptance of a claim for late priority under 37 CFR §§ 1.78(a)(3) and 1.78(a)(6) is only applicable to those applications filed on or after November 29, 2000. Further, the petition is appropriate only after the expiration of the period specified in 37 CFR §§ 1.78(a)(2)(ii) and 1.78(a)(5)(ii). In addition, the petition under 37 CFR §§ 1.78(a)(3) and 1.78(a)(6) must be accompanied by:

(1) the reference required by 35 U.S.C. §§ 120 and 119(e) and 37 CFR §§ 1.78(a)(2)(i) and 1.78(a)(5)(i) of the prior-filed application, unless previously submitted;
(2) the surcharge set forth in § 1.17(t); and
(3) a statement that the entire delay between the date the claim was due under 37 CFR §§ 1.78(a)(2)(ii) and 1.78(a)(5)(ii) and the date the claim was filed was unintentional. The Commissioner may require additional where there is a question whether the delay was unintentional.

The instant nonprovisional application was filed after November 29, 2000, and the claim herein for the benefit of priority to the prior-filed applications is submitted after expiration of the period specified in 37 CFR 1.78(a)(2)(ii) and 1.78(a)(5)(ii). Also, the reference to the prior-filed applications was submitted during the pendency of the instant nonprovisional application, for which the claim for benefit of priority is sought.

See 35 U.S.C. §§ 120 and 119(e). Accordingly, having found that the instant petition for acceptance of an unintentionally delayed claim for the benefit of priority under 35 U.S.C. §§ 120 and 119(e) to the prior-filed applications satisfies the conditions of 37 CFR 1.78(a)(3) and 1.78(a)(6), the petition is granted.

The granting of the petitions to accept the delayed benefit claim to the prior-filed applications under 37 CFR 1.78(a)(3) and 1.78(a)(6) should not be construed as meaning that the instant application is entitled to the benefit of the prior-filed applications. In order for the instant application to be entitled to the benefit of the prior-filed applications, all other requirements under 35 U.S.C. § 120 and 37 CFR 1.78(a)(1) and (a)(2) and 35 U.S.C. § 119 and 37 CFR 1.78(a)(4) and (a)(5) must be met. Similarly, the fact that the corrected Filing Receipt accompanying this decision on petition includes the prior-filed applications should not be construed as meaning that applicant is entitled to the claim for benefit of priority to the prior-filed applications noted thereon. Accordingly, the examiner will, in due course, consider this benefit claim and determine whether the instant application is entitled to the benefit of the earlier filing dates.

A corrected Filing Receipt, which includes the priority claim to the prior-filed non-provisional and provisional applications accompanies this decision on petition.

Any inquiries concerning this decision may be directed to Senior Petitions Attorney Patricia Faison-Ball at (571) 272-3212.

This application is being forwarded to Technology Center Art Unit 2625 for appropriate action on the revised application data sheet filed August 30, 2004, including consideration by the examiner of the claims under 35 U.S.C. §§ 119(e) and 120 for the benefit of priority to prior filed non-provisional application nos. 09/811,366 and 09/127,502 and provisional application no. 60/082,228.

Frances Hicks

Frances Hicks
Lead Petitions Examiner
Office of Petitions
Office of the Deputy Commissioner
for Patent Examination Policy

ATTACHMENT: Corrected Filing Receipt

UNITED STATES PATENT AND TRADEMARK OFFICE

MAILED
FROM DIRECTOR'S OFFICE

JUL 05 2006

TECHNOLOGY CENTER 3600

Commissioner for Patents
United States Patent and Trademark Office
P.O. Box 1450
Alexandria, VA 22313-1450
www.uspto.gov

THE WEBB LAW FIRM, P.C.
700 KOPPERS BUILDING
436 SEVENTH AVENUE
PITTSBURGH, PA 15219

In re application of	:	**DECISION ON PETITION**
Steven N. Brody	:	**TO MAKE SPECIAL**
Application No. 10/792,401	:	**(ACCELERATED**
Filed: March 03, 2004	:	**EXAMINATION)**
For: METHOD OF CAPACITY MARKETING		

This is in response to the petition filed on June 15, 2006 to make the above-identified application special on the basis of special examining procedure for certain new applications - accelerated examination as set forth in MPEP § 708.02 VIII.

The requirements for granting special status under this section are: (A) a petition to make special accompanied by the fee set forth in 37 CFR 1.17(i); (B) all claims being directed to a single invention, or an election without traverse if the Office determines that all the claims are not directed to a single invention; (C) a statement that a pre-examination search was made listing the field of search; (D) one copy of each of the references deemed most closely related to the subject matter encompassed by the claims if said references are not already of record; and (E) a detailed discussion of how the claimed subject matter is patentable over the references in accordance with 37 CFR 1.111 (b) and (c).

Since all of the requirements for special status under MPEP § 708.02 VIII have been met, the petition is **GRANTED**.

The examiner is directed (1) to make an interference search for possible interfering applications, (2) to promptly examine this application out of turn, and (3) if any interfering application is discovered, to examine such application simultaneously and state in the first official letter of such application that it is being taken out of turn because of a possible interference.

Petitioner is advised that this application will continue to be special, throughout its entire prosecution and pendency, including interference or appeal, if any, only if petitioner makes a prompt ***bona fide*** effort, in response to each Office action, to place the application in condition for allowance, even if it is necessary to conduct an interview with the examiner to accomplish this purpose.

SUMMARY: Petition to Make Special **GRANTED**.

Kenneth J. Dorner
Special Programs Examiner
Technology Center 3600
(571) 272-6587

KJD/slb: 06/29/06

UNITED STATES PATENT AND TRADEMARK OFFICE

Commissioner for Patents
United States Patent and Trademark Office
P.O. Box 1450
Alexandria, VA 22313-1450
www.uspto.gov

THE BILICKI LAW FIRM, PC
1285 NORTH MAIN STREET
JAMESTOWN, NY 14701

MAILED

MAY 26 2009

OFFICE OF PETITIONS

In re Application of	:	
Steven N. BRODY	:	
Application No. 10/792,401	:	DECISION ON PETITION
Filed: March 3, 2004	:	TO WITHDRAW
Attorney Docket No. 305.067601	:	FROM RECORD
	:	

This is a decision on the Request to Withdraw as attorney or agent of record under 37 C.F.R. § 1.36(b), filed October 31, 2008.

The request is **APPROVED**.

A grantable request to withdraw as attorney/agent of record must be signed by every attorney/agent seeking to withdraw or contain a clear indication that one attorney is signing on behalf of another/others. The Office requires the practitioner(s) requesting withdrawal to certify that he, she, or they have: (1) given reasonable notice to the client, prior to the expiration of the response period, that the practitioner(s) intends to withdraw from employment; (2) delivered to the client or a duly authorized representative of the client all papers and property (including funds) to which the client is entitled; and (3) notified the client of any responses that may be due and the time frame within which the client must respond, pursuant 37 CFR 10.40(c).

The request was signed by Byron A. Bilicki on behalf of all attorneys of record who are associated with Customer No. 23445.

All attorneys/agents associated with the Customer Number 23445 have been withdrawn.

Applicant is reminded that there is no attorney of record at this time.

The correspondence address of record has been changed and the new correspondence address is the address indicated below until otherwise properly notified by the applicant.

Telephone inquiries concerning this decision should be directed to the undersigned at 571-272-6735.

Diane Goodwyn
Petitions Examiner
Office of Petitions

cc: STEVEN BRODY
3 WHITES WOODS TRAIL
INDIANA, PA 15701

UNITED STATES PATENT AND TRADEMARK OFFICE

UNITED STATES DEPARTMENT OF COMMERCE
United States Patent and Trademark Office
Address: COMMISSIONER FOR PATENTS
P.O. Box 1450
Alexandria, Virginia 22313-1450
www.uspto.gov

APPLICATION NUMBER	FILING OR 371(C) DATE	FIRST NAMED APPLICANT	ATTY. DOCKET NO./TITLE
10/792,401	03/03/2004	Steven N. Brody	305.067601

CONFIRMATION NO. 2133

POWER OF ATTORNEY NOTICE

23445
THE BILICKI LAW FIRM, PC
1285 North Main Street
JAMESTOWN, NY 14701

OC000000036041605

Date Mailed: 05/19/2009

NOTICE REGARDING CHANGE OF POWER OF ATTORNEY

This is in response to the Power of Attorney filed 10/31/2008.

- The withdrawal as attorney in this application has been accepted. Future correspondence will be mailed to the new address of record. 37 CFR 1.33.

/dcgoodwyn/

Office of Data Management, Application Assistance Unit (571) 272-4000, or (571) 272-4200, or 1-888-786-0101

UNITED STATES PATENT AND TRADEMARK OFFICE

Commissioner for Patents
United States Patent and Trademark Office
P.O. Box 1450
Alexandria, VA 22313-1450
www.uspto.gov

ROBINS & PASTERNAK
1731 EMBARCADERO ROAD
SUITE 230
PALO ALTO CA 94303

COPY MAILED

JUN 0 6 2007

OFFICE OF PETITIONS

ON PETITION

In re Application of	:
Kiemeneij, Ferdinand	:
Application No. 10/792,432	:
Filed: March 3, 2004	:
Attorney Docket No. 1001.1302105	:

This is a decision on the petition under 37 C.F.R. § 1.137(b), filed January 16, 2007, to revive the above-identified application.

The petition is **GRANTED.**

The petition satisfies the conditions for revival pursuant to the provisions of 37 CFR 1.137(b) in that (1) the reply in the form of a continuing application; (2) the petition fee; and (3) the required statement of unintentional delay have been received. Accordingly, the response has been accepted as having been unintentionally delayed.

The above-identified application is being revived solely for purposes of continuity. As continuity has been established by this decision reviving the above-identified application, the above-identified application is again abandoned in favor of continuing application No. 11/623,641.

Telephone inquiries regarding this decision should be directed to the undersigned at (571) 272-3206.

Liana Walsh
Petitions Examiner
Office of Petitions

UNITED STATES PATENT AND TRADEMARK OFFICE

Commissioner for Patents
United States Patent and Trademark Office
P.O. Box 1450
Alexandria, VA 22313-1450
www.uspto.gov

CROMPTON, SEAGER & TUFTE, LLC
1221 NICOLLET AVENUE
SUITE 800
MINNEAPOLIS MN 55403-2420

COPY MAILED

JUN 14 2007

OFFICE OF PETITIONS

In re Application of	:	
Kiemeneij, Ferdinand	:	
Application No. 10/792,432	:	ON PETITION
Filed: March 3, 2004	:	
Attorney Docket No. 1001.1302105	:	

CORRECTED DECISION

This is a decision on the petition under 37 C.F.R. § 1.137(b), filed January 16, 2007, to revive the above-identified application.

The petition is **GRANTED.**

The petition satisfies the conditions for revival pursuant to the provisions of 37 CFR 1.137(b) in that (1) the reply in the form of a continuing application; (2) the petition fee; and (3) the required statement of unintentional delay have been received. Accordingly, the response has been accepted as having been unintentionally delayed.

The above-identified application is being revived solely for purposes of continuity. As continuity has been established by this decision reviving the above-identified application, the above-identified application is again abandoned in favor of continuing application No. 11/623,641.

Telephone inquiries regarding this decision should be directed to the undersigned at (571) 272-3206.

Liana Walsh
Petitions Examiner
Office of Petitions

UNITED STATES PATENT AND TRADEMARK OFFICE

UNITED STATES DEPARTMENT OF COMMERCE
United States Patent and Trademark Office
Address: COMMISSIONER FOR PATENTS
P.O. Box 1450
Alexandria, Virginia 22313-1450
www.uspto.gov

TAROLLI, SUNDHEIM, COVELL & TUMMINO L.L.P.
1300 EAST NINTH STREET, SUITE 1700
CLEVELAND, OH 44114

Mail Date: 04/26/2010

Applicant	: Yun Luo	: DECISION ON REQUEST FOR
Patent Number	: 7609893	: RECALCULATION of PATENT
Issue Date	: 10/27/2009	: TERM ADJUSTMENT IN VIEW
Application No	: 10/792,445	: OF WYETH AND NOTICE OF INTENT TO
Filed	: 03/03/2004	: ISSUE CERTIFICATE OF CORRECTION
		:

The Request for Recalculation is **GRANTED** to the extent indicated.

The patent term adjustment has been determined to be **975** days. The USPTO will *sua sponte* issue a certificate of correction reflecting the amount of PTA days determined by the recalculation.

Prior to the issuance of the certificate of correction, the USPTO will afford patentee an opportunity to be heard and request reconsideration. Accordingly, patentee has **one month or thirty (30) days**, whichever is longer, to file a request for reconsideration of this patent term adjustment calculation. See 35 U.S.C. 154(b)(3)(B)(ii) and 37 CFR 1.322(a)(4). No extensions of time will be granted under 37 CFR 1.136.

Patentee should use document code PET.OP if electronically filing a request for reconsideration of this patent term adjustment calculation. The patentee must also include the information required by 37 CFR 1.705(b)(2) and the fee required by 37 CFR 1.18(e). If patentee does not file a timely request for reconsideration of this patent term adjustment calculation including the information required by 37 CFR 1.705(b)(2) and the fee required by 37 CFR 1.18(e), the USPTO will issue a certificate of correction reflecting the PTA determination noted above.

Patentee should be aware that in order to preserve the right to review in the United States District Court for the District of Columbia of the USPTO patent term adjustment determination, patentee must ensure that he or she also take the steps required under 35 U.S.C. 154(b)(4)(A) in a timely manner. Nothing in the request for recalculation should be construed as providing an alternative time frame for commencing a civil action under 35 U.S.C. 154(b)(4)(A).

Any questions concerning this decision should be directed to the Office of Patent Legal Administration at 571-272-7702.

UNITED STATES PATENT AND TRADEMARK OFFICE

Commissioner for Patents
United States Patent and Trademark Office
P.O. Box 1450
Alexandria, VA 22313-1450
www.uspto.gov

WESTMAN CHAMPLIN & KELLY, P.A.
SUITE 1400
900 SECOND AVENUE SOUTH
MINNEAPOLIS MN 55402-3319

COPY MAILED

FEB 15 2007

OFFICE OF PETITIONS

In re Application of	:	
Lew Papendick et al	:	
Application No. 10/792,448	:	DECISION GRANTING PETITION
Filed: March 3, 2004	:	UNDER 37 CFR 1.137(b)
Attorney Docket No. S870.12-0002	:	

This is a decision on the petition under 37 CFR 1.137(b), filed October 16, 2006, to revive the above-identified application.

The petition is **GRANTED**.

37 CFR 1.137(b)(3) requires a statement that the entire delay in filing the required reply from the due date for the reply until the filing of a grantable petition pursuant to 37 CFR 1.137(b) was unintentional. Since the statement contained in the instant petition varies from the language required by 37 CFR 1.137(b)(3), the statement contained in the instant petition is being construed as the statement required by 37 CFR 1.137(b)(3) and petitioner must notify the Office if this is **not** a correct interpretation of the statement contained in the instant petition.

The petition satisfies the conditions for revival pursuant to the provisions of 37 CFR 1.137(b) in that (1) the reply in the form of the issue fee and publication fee; (2) the petition fee; and (3) the required statement of unintentional delay have been received. Accordingly, the reply to the Notice of Allowance of May 8, 2006 is accepted as having been unintentionally delayed.

Telephone inquiries concerning this decision should be directed to the undersigned at (571) 272-3208.

This matter is being referred to Patent Publication.

Karen Creasy

Karen Creasy
Petitions Examiner
Office of Petitions

UNITED STATES PATENT AND TRADEMARK OFFICE

Commissioner for Patents
United States Patent and Trademark Office
P.O. Box 1450
Alexandria, VA 22313-1450
www.uspto.gov

MARSHALL, GERSTEIN & BORUN LLP
233 SOUTH WACKER DRIVE
6300 SEARS TOWER
CHICAGO IL 60606-6357

COPY MAILED
JAN 08 2010

In re Application of	:	
Kari Alitalo, et al.	:	
Application No. 10/792,480	:	NOTICE
Filed: March 3, 2004	:	
Attorney Docket No. 28967/34140A3	:	

This is a notice regarding your request for acceptance of a fee deficiency submission under 37 CFR 1.28.

The Office no longer investigates or rejects original or reissue applications under 37 CFR 1.56. **1098 Off. Gaz. Pat. Office 502 (January 3, 1989)**. Therefore, nothing in this Notice is intended to imply that an investigation was done.

Your fee deficiency submission under 37 CFR 1.28 is hereby **ACCEPTED**.

This application is no longer entitled to small entity status. Accordingly, all future fees paid in this application must be paid at the large entity rate.

Inquiries related to this communication should be directed to Terri Johnson at (571) 272-2991.

Terri Johnson
Petitions Examiner
Office of Petitions

Christopher Bottorff
Petitions Examiner
Office of Petitions

UNITED STATES PATENT AND TRADEMARK OFFICE

COMMISSIONER FOR PATENTS
UNITED STATES PATENT AND TRADEMARK OFFICE
P.O. BOX 1450
ALEXANDRIA, VA 22313-1450
www.uspto.gov

MAIL

JUN 3 0 2005

DIRECTOR OFFICE
TECHNOLOGY CENTER 2600

William S. Lovell
6435 N.E. Neptune Dr.
Lincoln City, OR 97367

In re Application of	:	
Vann Basinger, et al.	:	
Application No. 10/792,482	:	DECISION ON PETITION
Filed: March 2, 2004	:	TO MAKE SPECIAL
For: STATEMENT REGARDING FEDERALLY	:	
SPONSORED RESEARCH OR DEVELOPMENT	:	

This is a decision on the petition under 37 C.F.R. §1.102 to make special filed May 31, 2005 which is considered as pursuant to MPEP §708.02 (IV), applicant's age.

A petition to make special under MPEP §708.02, IV, must show that petitioner is 65 years of age, or more. Acceptable evidence includes a birth certificate, copy of a driver's license, or simply a statement by the applicant. No fee is required.

The petition includes a statement by Vann Basinger indicating that he is over 65 years of age.

Accordingly, the petition is **GRANTED**.

The application will retain its special status throughout its entire prosecution, including any appeal to the Board of Patent Appeals and Interferences, subject only to diligent prosecution by the applicant.

The application is being forwarded to the examiner for expedited prosecution.

Kenneth A. Wieder
Special Program Examiner
Technology Center 2600
Communications
(571) 272-2986

UNITED STATES PATENT AND TRADEMARK OFFICE

Commissioner for Patents
United States Patent and Trademark Office
P.O. Box 1450
Alexandria, VA 22313-1450
www.uspto.gov

ANDREW F. SAYKO JR.
1014 CROOKED OAKS LANE
SEABROOK ISLAND SC 29455-6502

MAILED

MAR 08 2010

OFFICE OF PETITIONS

In re Application of	:	
Kenneth KEUCHEL, et al	:	
Application No. 10/792,483	:	ON PETITION
Filed: March 3, 2004	:	
Attorney Docket No. 2004/01	:	

This is a decision on the petition under the unintentional provisions of 37 CFR 1.137(b), filed December 7, 2009, to revive the above-identified application.

The petition is **DISMISSED**.

The application became abandoned for failure to timely file a reply within the meaning of 37 CFR 1.113 to the final Office action of January 30, 2009. The proposed reply required for consideration of a petition to revive must be a Notice of Appeal (and appeal fee required by 37 CFR 41.20(b)(2)), an amendment that *prima facie* places the application in condition for allowance, a Request for Continued Examination (RCE) and submission (37 CFR 1.114), or the filing of a continuing application under 37 CFR 1.53(b). *See* MPEP 711.03(c)(III)(A)(2). Since the amendment submitted does not *prima facie* place the application in condition for allowance (see attached Advisory Action), the reply required must be a Notice of Appeal (and appeal fee), RCE, or the filing of a continuing application under 37 CFR 1.53(b).

Any request for reconsideration of this decision must be submitted within TWO (2) MONTHS from the mail date of this decision. Extensions of time under 37 CFR 1.136(a) are permitted. The reconsideration request should include a cover letter entitled "Renewed Petition under 37 CFR 1.137(b)." This is **not** a final agency action within the meaning of 5 U.S.C. § 704.

Further correspondence with respect to this matter should be addressed as follows:

By Mail: Mail Stop PETITION
Commissioner for Patents
P. O. Box 1450
Alexandria, VA 22313-1450

By hand: U. S. Patent and Trademark Office

Customer Service Window, Mail Stop Petitions
Randolph Building
401 Dulany Street
Alexandria, VA 22314

The centralized facsimile number is **(571) 273-8300.**

Telephone inquiries concerning this decision should be directed to the undersigned at (571) 272-6735.

/DCG/
Diane C. Goodwyn
Petitions Examiner
Office of Petitions

Attachment: Advisory Action

Advisory Action Before the Filing of an Appeal Brief	Application No. 10/792,483	Applicant(s) KEUCHEL ET AL.	
	Examiner Andrew T. Piziali	Art Unit 1794	

--The MAILING DATE of this communication appears on the cover sheet with the correspondence address --

THE REPLY FILED 07 December 2009 FAILS TO PLACE THIS APPLICATION IN CONDITION FOR ALLOWANCE.

1. ☐ The reply was filed after a final rejection, but prior to or on the same day as filing a Notice of Appeal. To avoid abandonment of this application, applicant must timely file one of the following replies: (1) an amendment, affidavit, or other evidence, which places the application in condition for allowance; (2) a Notice of Appeal (with appeal fee) in compliance with 37 CFR 41.31; or (3) a Request for Continued Examination (RCE) in compliance with 37 CFR 1.114. The reply must be filed within one of the following time periods:
   a) ☐ The period for reply expires _____months from the mailing date of the final rejection.
   b) ☐ The period for reply expires on: (1) the mailing date of this Advisory Action, or (2) the date set forth in the final rejection, whichever is later. In no event, however, will the statutory period for reply expire later than SIX MONTHS from the mailing date of the final rejection.
   Examiner Note: If box 1 is checked, check either box (a) or (b). ONLY CHECK BOX (b) WHEN THE FIRST REPLY WAS FILED WITHIN TWO MONTHS OF THE FINAL REJECTION. See MPEP 706.07(f).

Extensions of time may be obtained under 37 CFR 1.136(a). The date on which the petition under 37 CFR 1.136(a) and the appropriate extension fee have been filed is the date for purposes of determining the period of extension and the corresponding amount of the fee. The appropriate extension fee under 37 CFR 1.17(a) is calculated from: (1) the expiration date of the shortened statutory period for reply originally set in the final Office action; or (2) as set forth in (b) above, if checked. Any reply received by the Office later than three months after the mailing date of the final rejection, even if timely filed, may reduce any earned patent term adjustment. See 37 CFR 1.704(b).

NOTICE OF APPEAL

2. ☐ The Notice of Appeal was filed on _____. A brief in compliance with 37 CFR 41.37 must be filed within two months of the date of filing the Notice of Appeal (37 CFR 41.37(a)), or any extension thereof (37 CFR 41.37(e)), to avoid dismissal of the appeal. Since a Notice of Appeal has been filed, any reply must be filed within the time period set forth in 37 CFR 41.37(a).

AMENDMENTS

3. ☐ The proposed amendment(s) filed after a final rejection, but prior to the date of filing a brief, will not be entered because
   (a) ☐ They raise new issues that would require further consideration and/or search (see NOTE below);
   (b) ☐ They raise the issue of new matter (see NOTE below);
   (c) ☐ They are not deemed to place the application in better form for appeal by materially reducing or simplifying the issues for appeal; and/or
   (d) ☐ They present additional claims without canceling a corresponding number of finally rejected claims.
   NOTE: _____. (See 37 CFR 1.116 and 41.33(a)).
4. ☐ The amendments are not in compliance with 37 CFR 1.121. See attached Notice of Non-Compliant Amendment (PTOL-324).
5. ☐ Applicant's reply has overcome the following rejection(s): _____.
6. ☐ Newly proposed or amended claim(s) _____ would be allowable if submitted in a separate, timely filed amendment canceling the non-allowable claim(s).
7. ☐ For purposes of appeal, the proposed amendment(s): a) ☐ will not be entered, or b) ☐ will be entered and an explanation of how the new or amended claims would be rejected is provided below or appended.
   The status of the claim(s) is (or will be) as follows:
   Claim(s) allowed: _____.
   Claim(s) objected to: _____.
   Claim(s) rejected: _____.
   Claim(s) withdrawn from consideration: _____.

AFFIDAVIT OR OTHER EVIDENCE

8. ☐ The affidavit or other evidence filed after a final action, but before or on the date of filing a Notice of Appeal will not be entered because applicant failed to provide a showing of good and sufficient reasons why the affidavit or other evidence is necessary and was not earlier presented. See 37 CFR 1.116(e).
9. ☐ The affidavit or other evidence filed after the date of filing a Notice of Appeal, but prior to the date of filing a brief, will not be entered because the affidavit or other evidence failed to overcome all rejections under appeal and/or appellant fails to provide a showing a good and sufficient reasons why it is necessary and was not earlier presented. See 37 CFR 41.33(d)(1).
10. ☐ The affidavit or other evidence is entered. An explanation of the status of the claims after entry is below or attached.

REQUEST FOR RECONSIDERATION/OTHER

11. ☒ The request for reconsideration has been considered but does NOT place the application in condition for allowance because: See Continuation Sheet.
12. ☐ Note the attached Information *Disclosure Statement*(s). (PTO/SB/08) Paper No(s). _____
13. ☐ Other: _____.

/Andrew T Piziali/
Primary Examiner, Art Unit 1794

Continuation of 11. does NOT place the application in condition for allowance because: Arguments are not persuasive.

UNITED STATES PATENT AND TRADEMARK OFFICE

Commissioner for Patents
United States Patent and Trademark Office
P.O. Box 1450
Alexandria, VA 22313-1450
www.uspto.gov

ANDREW F. SAYKO, JR.
1014 CROOKED OAKS LANE
SEABROOK ISLAND SC 29455-6502

MAILED

MAY 27 2010

OFFICE OF PETITIONS

In re Application of	:	
Kenneth KEUCHEL, et al	:	
Application No. 10/792,483	:	DECISION ON PETITION
Filed: March 3, 2004	:	
Attorney Docket No. 2004/01	:	

This is a decision on the renewed petition under the unintentional provisions of 37 CFR 1.137(b), filed May 5, 2010, to revive the above-identified application.

The petition is **GRANTED**.

The two-month period for filing an appeal brief under 37 CFR 41.37 (accompanied by the fee required by 37 CFR 41.20(b)(2)), runs from the date of this decision.

This application became abandoned for failure to timely file a reply within the meaning of 37 CFR 1.113 to the final Office action of January 30, 2009. The proposed reply required for consideration of a petition to revive must be a Notice of Appeal (and appeal fee required by 37 CFR 41.20(b)(2)), an amendment that *prima facie* places the application in condition for allowance, a Request for Continued Examination (RCE) and submission (37 CFR 1.114), or the filing of a continuing application under 37 CFR 1.53(b). See MPEP 711.03(c)(II)(A)(2). No extensions of time pursuant to the provisions of 37 CFR 1.136(a) were obtained. Accordingly, the date of abandonment of this application is May 1, 2009.

The petition satisfies the requirements of 37 CFR 1.137(b) in that petitioner has supplied (1) the reply in the form of a Notice of Appeal and fee; (2) the petition fee of $810; and (3) a proper statement of unintentional delay.

Telephone inquiries concerning this decision should be directed to the undersigned at (571) 272-6735.

This application is being referred to Technology Center AU 1794 to await the filing of an appeal brief or for such other appropriate reply as may be submitted to continue prosecution of the application.

/dcg/
Diane C. Goodwyn
Petitions Examiner
Office of Petitions

UNITED STATES PATENT AND TRADEMARK OFFICE

Commissioner for Patents
United States Patent and Trademark Office
P.O. Box 1450
Alexandria, VA 22313-1450
www.uspto.gov

BERKELEY LAW & TECHNOLOGY GROUP
1700NW 167TH PLACE
SUITE 240
BEAVERTON, OR 97006

COPY MAILED

SEP 02 2005

OFFICE OF PETITIONS

In re Application of :
Larry I. Gritz, et al. :
Application No. 10/792,497 : ON PETITION
Filed: March 2, 2004 :
Attorney Docket No. 004.P002 :

This is a decision on the petition under 37 CFR 1.137(b), filed April 18, 2005, to revive the above-identified application.

The petition is **GRANTED.**

The above-identified application became abandoned for failure to reply in a timely manner to the Notice to File Corrected Application Papers mailed May 21, 2004. The Notice set a period for reply of two (2) months from the mail date of the Notice. No extensions of time under the provisions of 37 CFR 1.136(a) were obtained. Accordingly, the above-identified application became abandoned on July 22, 2004.

The Change of Correspondence Address submitted on April 18, 2005 with the instant petition has been accepted and recorded; however, the address given on the petition differs from the address of record. Petitioner is advised to check the customer number for accuracy. A courtesy copy of this decision is being mailed to the address given on the petition; however, the Office will mail future correspondence solely to the address of record.

Telephone inquiries concerning this decision should be directed to the undersigned at (571) 272-3229.

This application matter is being forwarded to the Office of Initial Patent Examination for further processing.

Retta Williams

Retta Williams
Petitions Examiner
Office of Petitions
Office of the Deputy Commissioner
for Patent Examination Policy

cc: Howard A. Skaist
5250 NE Elam Young Pkwy, Ste. 850
Hillsboro, OR 07124

UNITED STATES PATENT AND TRADEMARK OFFICE

Commissioner for Patents
United States Patent and Trademark Office
P.O. Box 1450
Alexandria, VA 22313-1450
www.uspto.gov

JAN - 4 2005

ROPES & GRAY LLP
ONE INTERNATIONAL PLACE
BOSTON MA 02110-2624

In re Application of	:
Noubar B. Afeyanet al	:
Serial No.: 10/792,498	: PETITION TO MAKE SPECIAL
Filed: March 2, 2004	:
Attorney Docket No.: COTH-P03-001	:

This is in response to the petition filed May 26, 2004, to make the above-identified application special under the provisions of 37 CFR 1.102(d). The delay in acting on this petition was occasioned by delay in initial processing of the application.

Applicant has satisfied the provisions set forth in M.P.E.P. 708.02, XII. Therefor the petition is **GRANTED**.

Should there be any questions with regard to this letter please contact William R. Dixon, Jr. by letter addressed to the Director, Technology Center 1600, P.O. Box 1450, Alexandria, VA 22313-1450, or by telephone at 571-272-0519 or by facsimile transmission at 571-273-8300.

William R. Dixon, Jr.
Special Program Examiner
Technology Center 1600

SPE RESPONSE FOR CERTIFICATE OF CORRECTION

Paper No.:20080722

DATE : July 21, 2008

TO SPE OF : ART UNIT 2621

SUBJECT : Request for Certificate of Correction on Patent No.: 7339991 B2

A response is requested with respect to the accompanying request for a certificate of correction.

Please complete this form and return with file, within **7** days to:
Certificates of Correction Branch - ST (South Tower) 9A22
Palm location **7590** - Tel. No. (703) 305-8309

With respect to the change(s) requested, correcting Office and/or Applicant's errors, should the patent read as shown in the certificate of correction? No new matter should be introduced, nor should the scope or meaning of the claims be changed.

Thank You For Your Assistance **Certificates of Correction Branch**

The request for issuing the above-identified correction(s) is hereby:

Note your decision on the appropriated box.

☒ **Approved** All changes apply.

☐ **Approved in Part** Specify below which changes **do not** apply.

☐ **Denied** State the reasons for denial below.

Comments:

The Request for the Certificate of Correction has been approved by the examiner.

/G.P./

/Mehrdad Dastouri/
Supervisory Patent Examiner.Art Unit 2621

UNITED STATES PATENT AND TRADEMARK OFFICE

Commissioner for Patents
United States Patent and Trademark Office
P.O. Box 1450
Alexandria, VA 22313-1450
www.uspto.gov

PHILIP S. JOHNSON
JOHNSON & JOHNSON
ONE JOHNSON & JOHNSON PLAZA
NEW BRUNSWICK, NJ 08933-7003

RECEIVED
DEC 19 2008
OFFICE OF PETITIONS

In re Application of :
Zhang et al. :
Application No. 10/792,522 : DECISION ON PETITION
Filed: March 3, 2004 :
Attorney Docket No. PRD2048NP :

This is a decision on the petition under the unintentional provisions of 37 CFR 1.137(b), filed November 28, 2008, to revive the above-identified application.

The petition is **GRANTED**.

This application became abandoned for failure to timely pay the issue and publication fees on or before September 29, 2008, as required by the Notice of Allowance and Fee(s) Due mailed June 27, 2008 (September 27, 2008 was a Saturday). Accordingly, the application became abandoned on September 28, 2008. A Notice of Abandonment was mailed October 20, 2008.

The petition satisfies the requirements of 37 CFR 1.137(b) in that petitioner has supplied (1) the reply in the form of payment of the issue fee of $1,510 and the publication fee of $300, (2) the petition fee of $1,620; and (3) an adequate statement of unintentional delay.

The file does not indicate a change of address has been submitted, although the address given on the petition differs from the address of record. If appropriate, a change of address should be filed in accordance with MPEP 601.03. A courtesy copy of this decision is being mailed to the address given on the petition; however, the Office will mail all future correspondence solely to the address of record.

Telephone inquiries concerning this decision should be directed to Alicia Kelley at (571)272-6059.

This application is being referred to the Office of Data Management for processing into a patent.

/SDB/
Sherry D. Brinkley
Petitions Examiner
Office of Petitions

cc: YURIY STERCHO
JOHNSON & JOHNSON
145 KING OF PRUSSIA ROAD
RADNOR, PA 19087

UNITED STATES PATENT AND TRADEMARK OFFICE

Commissioner for Patents
United States Patent and Trademark Office
P.O. Box 1450
Alexandria, VA 22313-1450
www.uspto.gov

BAKER BOTTS L.L.P
910 LOUISIANA STREET, ONE SHELL PLAZA
HOUSTON, TX 77002

MAILED

JUL 02 2010

OFFICE OF PETITIONS

In re Application of :
Paul F. Rodney, et al. :
Application No. 10/792,541 :
Filed: May 3, 2004 :
Attorney Docket No.: 063718.0461 :

ON PETITION

This is a decision on the petition, filed May 10, 2010, which is being treated as a petition under 37 CFR 1.181 (no fee) requesting withdrawal of the holding of abandonment in the above-identified application. Alternatively, petitioner requests that the application be revived under the provisions of 1.137(a) or 1.137(b).

The petition is not signed by a registered patent attorney or patent agent of record. However, in accordance with 37 CFR 1.34, the signature of Mr. Bradley S. Bowling appearing on the correspondence shall constitute a representation to the United States Patent and Trademark Office that he is authorized to represent the particular party on whose behalf he acts.

The petition under 37 CFR 1.181 is **DISMISSED**.

The application became abandoned as a result of petitioner's failure to file an appeal brief (and fee required by 37 CFR 41.20(b)(2)) within the time period provided in 37 CFR 41.37(a)(1). As an appeal brief (and appeal brief fee) was not filed within two (2) months of the Notice of Appeal or within one (1) month of the Notice of Panel Decision, the appeal was dismissed and the proceedings as to the rejected claims were terminated. See 37 CFR 1.197(b). A Notice of Abandonment was mailed on March 8, 2010. In response, on May 10, 2010, the present petition was filed.

Petitioner asserts that the Notice of Panel Decision for Pre-Appeal Brief Review mailed on January 20, 2010 was not received.

A review of the written record indicates no irregularity in the mailing of the Office action on January 20, 2010, and, in the absence of any irregularity, there is a strong presumption that the Office action was properly mailed to the practitioner at the address of record. This presumption may be overcome by a showing that the Office action was not in fact received.

The showing required to establish non-receipt of an Office communication must include a statement from the practitioner describing the system used for recording an Office action received at the correspondence address of record with the USPTO. The statement should

establish that the docketing system is sufficiently reliable. It is expected that the record would include, but not be limited to, the application number, attorney docket number, the mail date of the Office action and the due date for the response. Practitioner must state that the Office action was not received at the correspondence address of record, and that a search of the practitioner's record(s), including any file jacket or the equivalent, and the application contents, indicates that the Office action was not received. A copy of the record(s) used by the practitioner where the non-received Office action would have been entered had it been received is required. A copy of the practitioner's record(s) required to show non-receipt of the Office action should include the master docket for the firm. That is, if a three month period for reply was set in the non-received Office action, a copy of the master docket report showing all replies docketed for a date three months from the mail date of the non-received Office action must be submitted as documentary proof of non-receipt of the Office action. If no such master docket exists, the practitioner should so state and provide other evidence such as, but not limited to, the following: the application file jacket; incoming mail log; calendar, reminder system, or the individual docket record for the application in question.

The evidence presented by applicant is insufficient to withdraw the holding of abandonment in accordance with the procedures set for at MPEP 711.03(c). Specifically, the petition fails to include a copy of the master docket report showing all replies docketed for a date three months from the mail date of the non-received Office action. The "master docket" record submitted simply shows Office communications with a receipt date of February 12 through February 22, 2010. Absent the required evidence to establish non-receipt of the Office action of February 20, 2010, the petition requesting withdrawal of the holding of abandonment cannot be granted.

Likewise, the showing of record is insufficient to establish to the satisfaction of the Director that the delay in responding was unavoidable within the meaning of 35 U.S.C. § 133 and 37 CFR 1.137(a).

However, a grantable petition under 37 CFR 1.137(b)[1] must be accompanied by: (1) the required reply, unless previously filed; (2) the petition fee as set forth in 37 CFR 1.17(m); (3) a statement that the entire delay in filing the required reply from the due date for the reply until the filing of a grantable petition pursuant to 37 CFR 1.137(b) was unintentional; and (4) any terminal disclaimer (and fee as set forth in 37 CFR 1.20(d)) required by 37 CFR 1.137(c).

The petition satisfies the requirements of 37 CFR 1.137(b) in that petitioner has supplied (1) the reply in the form of the Appeal Brief and requisite fee; (2) the petition fee of $1,620; and (3) an adequate statement of unintentional delay[2].

The petition under 37 CFR 1.137(b) is **GRANTED**.

---

[1] As amended effective December 1, 1997. See Changes to Patent Practice and Procedure; Final Rule Notice, 62 Fed. Reg. 53131, 53194-95 (October 10, 1997), 1203 Off. Gaz. Pat. Office 63, 119-20 (October 21, 1997).

[2] 37 CFR 1.137(b)(3) requires a statement that the entire delay in filing the required reply from the due date for the reply until the filing of a grantable petition pursuant to 37 CFR 1.137(b) was unintentional. While the statement is not made by an attorney of record, such statement is being treated as having been made as the result of a reasonable inquiry into the facts and circumstances of such delay. See 37 CFR 10.18(b) and Changes to Patent Practice and Procedure; Final Rule Notice, 62 Fed. Reg. 53131, 53178 (October 10, 1997), 1203 Off. Gaz. Pat. Office 63, 103 (October 21, 1997). In the event that such an inquiry has not been made, petitioner must make such an inquiry. If such inquiry results in the discovery that it is not correct that the entire delay in filing the required reply from the due date for the reply until the filing of a grantable petition pursuant to 37 CFR 1.137(b) was unintentional, petitioner must notify the Office.

The application is being referred to Technology Center AU 2612 for consideration of the response filed May 10, 2010.

Telephone inquiries concerning this decision should be directed to the undersigned at (571) 272-3204. Inquiries relating to further prosecution should be directed to the Technology Center.

Sherry D. Brinkley
Petitions Examiner
Office of Petitions

UNITED STATES PATENT AND TRADEMARK OFFICE

COMMISSIONER FOR PATENTS
UNITED STATES PATENT AND TRADEMARK OFFICE
P.O. BOX 1450
ALEXANDRIA, VA 22313-1450
www.uspto.gov

MAILED

SEP 3 0 2005

Technology Center 2100

TOWNSEND AND TOWNSEND AND CREW, LLP
TWO EMBARCADERO CENTER
EIGHTH FLOOR
SAN FRANCISCO CA 94111-3834

In re Application of: OSAKI
Application No. 10/792,550
Filed: March 2, 2004
For: DATA SYNCHRONIZATION OF MULTIPLE REMOTE STORAGE

DECISION ON PETITION
TO MAKE SPECIAL
(ACCELERATED EXAMINATION)
UNDER M.P.E.P. §708.02 (VIII)

This is a response to the petition filed 18 August 2005 under 37 C.F.R. §1.102(d) and M.P.E.P. §708.02 (VIII): Accelerated Examination, to make the above-identified application special.

The Petition is **DISMISSED**.

M.P.E.P. §708.02, Section VIII which sets out the prerequisites for a grantable petition for Accelerated Examination under 37 C.F.R. §1.102(d) states in relevant part:

A new application (one which has not received any examination by the examiner) may be granted special status provided that applicant (and this term includes applicant's attorney or agent) complies with each of the following items:

(a) Submits a petition to make special accompanied by the fee set forth in **37 CFR 1.17(h)**;

(b) Presents all claims directed to a single invention, or if the Office determines that all the claims presented are not obviously directed to a single invention, will make an election without traverse as a prerequisite to the grant of special status;

(c) Submits a statement(s) that a pre-examination search was made, listing the field of search by class and subclass, publication, Chemical Abstracts, foreign patents, etc. The pre-examination search must be directed to the invention as claimed in the application for which special status is requested. A search made by a foreign patent office satisfies this requirement;

(d) Submits one copy each of the references deemed most closely related to the subject matter encompassed by the claims if said references are not already of record; and

(e) Submits a detailed discussion of the references, which discussion points out, with the particularity required by 37 CFR 1.111 (b) and (c), how the claimed subject matter is patentable over the references.

In those instances where the request for this special status does not meet all the prerequisites set forth above, **applicant will be notified and the defects in the request will be stated**. The application will remain in the status of a new application awaiting action in its regular turn. In those instances where a request is defective in one or more respects, applicant will be given one opportunity to perfect the request in a renewed petition to make special. If perfected, the request will then be granted. If not perfected in the first renewed petition, any additional renewed petitions to make special may or may not be considered at the discretion of the Technology Center (TC) Special Program Examiner.

The petition filed 18 August 2005 fails to adequately meet requirement (e) of the criteria set forth above. The discussion of the references does not point out with the particularity required by 37 CFR 1.111(b) and (c) how the claimed subject matter is patentable over the references. Some of the limitations purporting to distinguish independent claim 8 from each reference do not appear to be in that claim. Claim 8 fails to require "a last sequence number record that stores a last sequence number associated with a last block of data received by the queue" (emphasis added).

Additionally, it is suggested that if the identical statement is being made to distinguish each reference from an independent claim, as in the instant petition, then the statement should simply be made once in the petition. (E.g., "Regarding independent claim 1, none of the references disclose . . . .")

Petition to Make Special **DISMISSED**.

Petitioner is given one opportunity to perfect the petition. Any request for reconsideration must be filed within TWO MONTHS of the mail date of this decision.

Until the renewed petition is submitted, the application will be returned to the examiner's docket to await treatment on the merits in the normal order of examination.

Pinchus M. Laufer

Pinchus M. Laufer
Special Program Examiner
Technology Center 2100
Computer Architecture, Software and Information Security
571-272-3599

ds

UNITED STATES PATENT AND TRADEMARK OFFICE

COMMISSIONER FOR PATENTS
UNITED STATES PATENT AND TRADEMARK OFFICE
P.O. BOX 1450
ALEXANDRIA, VA 22313-1450
www.uspto.gov

TOWNSEND AND TOWNSEND AND CREW, LLP
TWO EMBARCADERO CENTER
EIGHTH FLOOR
SAN FRANCISCO, CA 94111-3834

MAILED

DEC 1 4 2005

Technology Center 2100

In re Application of OSAKI	:	DECISION ON PETITION
Application No.: 10/792,550	:	FOR ACCELERATED
Filing Date: March 2, 2004	:	EXAMINATION UNDER
For: DATA SYNCHRONIZATION OF	:	M.P.E.P. §708.02(VIII)
MULTIPLE REMOTE STORAGE	:	
	:	

This is a response to the renewed petition filed October 31, 2005 under 37 C.F.R. §1.102(d) and M.P.E.P. §708.02 (VIII): Accelerated Examination, to make the above identified application special.

The renewed petition was filed in response to a dismissal of the original petition filed August 18, 2005. The petition was dismissed for failure to identify, with the particularity required by 37 CFR 1.111(b) and (c), how the claimed subject matter is patentable over the references.

The submission filed October 31,2005 corrects the deficiency noted in the original decision. The combined submissions meet all the criteria set forth in MPEP 708.02 (VIII). Accordingly, the renewed petition is **GRANTED**.

The application file is being forwarded to the Examiner for accelerated examination in accordance with M.P.E.P. §708.02, Section VIII. If the application is subsequently allowed, it will be given priority for printing. See M.P.E.P. §1309.

Pinchus M. Laufer
Special Programs Examiner
Technology Center 2100
Computer Architecture, Software, and Information Security
571-272-3599

UNITED STATES PATENT AND TRADEMARK OFFICE

COMMISSIONER FOR PATENTS
UNITED STATES PATENT AND TRADEMARK OFFICE
P.O. BOX 1450
ALEXANDRIA, VA 22313-1450
www.uspto.gov

HEWLETT PACKARD COMPANY
P O BOX 272400, 3404 E. HARMONY ROAD
INTELLECTUAL PROPERTY ADMINISTRATION
FORT COLLINS, CO 80527-2400

COPY MAILED

JUL 06 2007

OFFICE OF PETITIONS

In re Application of :
Michael Haeuptle :
Application No. 10/792,557 : DECISION ON PETITION
Filed: March 2, 2004 :
Attorney Docket No. 200401217-1 :

This is a decision on the petition, filed November 17, 2006, which is being treated as a petition under 37 CFR 1.181 (no fee) requesting withdrawal of the holding of abandonment in the above-identified application and on the petition under 37 CFR 1.137(b), which is being treated as a petition under 37 CFR 1.137(a) to revive the above-identified application.

The petition under 37 CFR 1.181 is **DISMISSED**.

The petition under 37 CFR 1.137(a) is **GRANTED**.

This application became abandoned for failure to timely reply on or before January 26, 2006 to the Notice of Allowability mailed October 26, 2005, which set a three (3) month period for reply, for the submission of corrected drawings. A Notice of Abandonment was mailed on April 6, 2006.

DISCUSSION OF PETITION UNDER 37 CFR 1.181

Petitioner states that the requirement for drawings in the Notice of October 26, 2005 is believed to have been made "in error since no defects existed in the drawings and /or the Examiner has not communicated to Applicant that any defects existed that would require drawing corrections." Petitioner points to the Notice of Allowability which does NOT indicate that corrected drawings are required, but admits that a check mark, allegedly difficult to see, was marked in the box b, which "requested changes to the drawings as required by an attached Examiner's Amendment/Comment or in the Office action of Paper No./Mail Date___." Further, even if drawing corrections are required, petitioner states that the changes cannot be effected since there is no communication from the Examiner as to what needs to be corrected. Therefore, petitioner contends that there was no reason for petitioner to believe that any defects existed in the drawings, especially in view of the fact that, in an

Office action dated June 14, 2005, the Examiner indicated that the drawings submitted upon application filing "are accepted."

The record fails to show that any request for clarification of the record or traversal of the requirement was made regarding the requirement for changes to the drawings within two months of the mailing of the Notice. Where a requirement is made and no petition is filed within the period set forth in 37 CFR 1.181(f) traversing the requirement for drawings, petitioner is presumed to have acquiesced to the requirement. Therefore, this application was properly held abandoned for failure to timely reply to the Notice or to file a grantable petition traversing the requirement for drawings. Accordingly, the holding of abandonment stands and will not be withdrawn.

DISCUSSION OF PETITION UNDER 37 CFR 1.137(a)

A petition under 37 CFR 1.137(a) must be accompanied by (1) the required reply, (2) the petition fee, and (3) a showing to the satisfaction of the Director that the entire delay was unavoidable.

The Examiner has indicated to the undersigned that it appeared that the box for changes to the drawings was checked by mistake. Accordingly, in view of the circumstances of this application, it would be equitable to revive this application under the unavoidable provisions of 37 CFR 1.137(a). Accordingly, the failure to timely reply to the Notice of October 26, 2006 is accepted as being unavoidably delayed.

As authorized, the $500 petition fee will be charged to petitioner's deposit account.

The requirement for changes to the drawings made in the Notice of October 26, 2006 is withdrawn.

Inquiries concerning this decision on petition may be directed to the undersigned at (571) 272-3218.

This application is being referred to Publishing Division for further processing in accordance with this decision on petition.

Frances Hicks

Frances Hicks
Petitions Examiner
Office of Petitions

SPE RESPONSE FOR CERTIFICATE OF CORRECTION

Paper No.: X

DATE : March 21,2008

TO SPE OF : ART UNIT 3766

SUBJECT : Request for Certificate of Correction for Appl. No.: 10/792,562 Patent No.: 7286877 B2

A response is requested with respect to a request for a certificate of correction.

With respect to the change(s) requested to correct Office and/or Applicant's errors, should the patent read as shown in the certificate of correction attached herewith or the COCIN document(s), in IFW images for the above-identified patented application? No new matter should be introduced, nor should the scope or meaning of the claims be changed.

If the response is for an IFW, within **7** days, please complete and forward the response, to the employee (named below) via scanning into application images, using document code **COCX**.

DO NOT SENT TO ATTORNEY

If the response is for a paper file wrapper, please complete the response and forward the response with the paper file wrapper, to the employee (named below), within **7** days, to:

Certificates of Correction Branch (CofC)
South Tower - 9A22
Palm Location 7580

You can fax the Directors/SPE response to 571-270-9990

LAMONTE NEWSOME
Certificates of Correction Branch
703-308-9390 ext. 112

Thank You For Your Assistance

The request for issuing the above-identified correction(s) is hereby:
Note your decision on the appropriate box.

x**Approved**	**All** changes apply.
☐ **Approved in Part**	Specify below which changes **do not** apply.
☐ **Denied**	State the reasons for denial below.

Comments: _____

/Carl H .Layno/ 3766
SPE **Art Unit**

Formatted: Indent: Left: 1.22"

Deleted: _

PTOL-306 (REV. 7/03) U.S. DEPARTMENT OF COMMERCE Patent and Trademark Office

UNITED STATES PATENT AND TRADEMARK OFFICE

Commissioner for Patents
United States Patent and Trademark Office
P.O. Box 1450
Alexandria, VA 22313-1450
www.uspto.gov

TEXAS INSTRUMENTS INCORPORATED
P O BOX 655474, M/S 3999
DALLAS TX 75265

COPY MAILED

AUG 0 9 2007

OFFICE OF PETITIONS

In re Application of	:	
Ahmed et al.	:	
Application No. 10/792569	:	ON PETITION
Filing or 371(c) Date: 03/03/2004	:	
Attorney Docket Number:	:	
TI-37041 (1962-10400)	:	

This is a decision on the Petition to Revive an Unintentionally Abandoned Application Under 37 C.F.R. § 1.137(b), filed April 2, 2007.

This Petition is hereby **granted**.

The above-identified application became abandoned for failure to timely and properly reply to the final Office action, mailed September 18, 2006. The Office action set a three (3) month period for reply. Extensions of time were available under 37 CFR 1.136(a). No timely and proper reply having been filed, the application became abandoned December 19, 2006. A Notice of Abandonment was mailed May 3, 2007.

The petition satisfies the conditions for revival pursuant to the provisions of 37 CFR 1.137(b) in that Applicant has filed (1) the reply in the form of a Notice of Appeal and fee; (2) the petition fee; and (3) the required statement of unintentional delay. Accordingly, the reply is accepted as having been unintentionally delayed.

The application is being referred to Technology Center Art Unit 2616 to await the brief in support of appeal.

Applicant has two (2) months from the mailing date of this Decision to file an appeal brief. Extensions of time are available under 37 CFR 1.136(a). Accord, MPEP 1215.01

Telephone inquiries concerning this decision should be directed to the undersigned at (571) 272-3232.

Derek L. Woods
Attorney
Office of Petitions

UNITED STATES PATENT AND TRADEMARK OFFICE

Commissioner for Patents
United States Patent and Trademark Office
P.O. Box 1450
Alexandria, VA 22313-1450
www.uspto.gov

TEXAS INSTRUMENTS INCORPORATED
P O BOX 655474, M/S 3999
DALLAS TX 75265

COPY MAILED

JAN 07 2009

OFFICE OF PETITIONS

In re Application of	:	
Ahmed et al.	:	
Application No. 10/792,569	:	DECISION ON PETITION
Filed: March 3, 2004	:	
Attorney Docket No. TI-37041	:	

This is a decision on the petition under the unintentional provisions of 37 CFR 1.137(b), filed August 25, 2008, to revive the above-identified application.

The petition is **GRANTED**.

This application became abandoned as a result of petitioner's failure to file an appeal brief (and fee required by 37 CFR 41.20(b)(2))within the time period provided in 37 CFR 41.37(a)(1). No extensions of time under the provisions of 37 CFR 1.136(b) were obtained. As an appeal brief (and appeal brief fee) was not filed within two (2) months of the Notice of Appeal dated August 9, 2007 (reset via petition granted August 9, 2007 under 37 CFR §,1.137(b)), the appeal was dismissed and the proceedings as to the rejected claims were terminated. See 37 CFR 1.197(b). As no claim was allowed, the application became abandoned on October 10, 2007. *See* MPEP 1215.04.

The petition satisfies the requirements of 37 CFR 1.137(b) in that petitioner has supplied (1) the reply in the form of an Appeal Brief and fee of $510.00 (charged to petitioner' deposit account as previously authorized on March 3, 2004); (2) the petition fee of $1,540.00; and (3) a proper statement of unintentional delay.

Petitioner requests waiver of the petition fee as the delay was the fault of the UPSTO. 35 U.S.C. 41(a)(7) provides that a petition for the revival of an unintentionally abandoned application or for the unintentionally delayed payment of the issue fee must be accompanied by the petition fee set forth in37 CFR 1.17(m), unless the petition is filed under 35 U.S.C. 133 or 151 (on the basis of unavoidable delay), in which case the fee is set forth in 37 CFR 1.17(l). Thus, unless the circumstances warrant the withdrawal of the holding of abandonment (i.e., it is determined that the application is not properly held abandoned), the payment of a petition fee to obtain the revival of an abandoned application is a statutory prerequisite to revival of the abandoned application, and cannot be waived.

Petitioner further states that Texas Instruments Incorporated was never notified of the previous petition granted on August 9, 2007. The decision was mailed to the correct correspondence address of record. A review of the written record indicates no irregularity in the mailing of the Office action, and, in the absence of any irregularity, there is a strong presumption that the Office action was properly mailed to the practitioner at the address of record.

Additionally, the address given on the instant petition differs from the address of record. A courtesy copy of this decision is being mailed to the address given on the petition; however, the Office will mail all future correspondence solely to the address of record.

Telephone inquiries concerning this decision should be directed to Joan Olszewski at (571) 272-7751.

This application is being referred to Technology Center AU 2416 for appropriate action by the Examiner in the normal course of business on the reply received.

/Liana Walsh/
Liana Walsh
Petitions Examiner
Office of Petitions

cc: Robert N. Roundtree, LLC
70360 Highway 69
Cotopaxi, CO 81223

UNITED STATES PATENT AND TRADEMARK OFFICE

Commissioner for Patents
United States Patent and Trademark Office
P.O. Box 1450
Alexandria, VA 22313-1450
www.uspto.gov

TEXAS INSTRUMENTS INCORPORATED
P O BOX 655474 M/S 3999
DALLAS TX 75265

MAILED

JUN 22 2010

OFFICE OF PETITIONS

In re Application of	:	
Ahmen, et al.	:	
Application No. 10/792,569	:	ON PETITION
Filed: March 3, 2004	:	
Attorney Docket No. TI-37041	:	

This is a decision on the petition to revive under 37 CFR 1.137(b), filed April 19, 2010.

The petition under 37 CFR 1.137(b) is **GRANTED**.

The above-identified application became abandoned for failure to timely file a reply to the non-final Office action, mailed July 22, 2009. This Notice set a shortened statutory period for reply of three months. No reply having been received, the application became abandoned on October 23, 2009. The mailing of this decision precedes the mailing of a courtesy Notice of Abandonment.

With the instant petition, petitioner paid the petition fee, made the proper statement of unintentional delay, and submitted the required reply in the form of an Amendment.

The file does not indicate a change of address has been submitted, although the address given on the petition differs from the address of record. If appropriate, a change of address should be filed in accordance with MPEP 601.03. A courtesy copy of this decision is being mailed to the address given on the petition; however, the Office will mail all future correspondence solely to the address of record.

The application is being forwarded to Group Art Unit 2461 for consideration of the Amendment, filed April 19, 2010.

Telephone inquiries related to this decision should be directed to the undersigned at (571)272-3207.

Cliff Congo
Petitions Attorney
Office of Petitions

cc: Robert N. Rountree, LLC
70360 Highway 69
Cotopaxi, CO 81223

UNITED STATES PATENT AND TRADEMARK OFFICE

Commissioner for Patents
United States Patent and Trademark Office
P.O. Box 1450
Alexandria, VA 22313-1450
www.uspto.gov

STAAS & HALSEY LLP
1201 NEW YORK AVENUE N.W., SUITE 700
WASHINGTON, DC 20005

COPY MAILED

DEC 2 1 2007

OFFICE OF PETITIONS

In re Application of :
KAWAHATA, Yuichi :
Application No. 10/792,578 : DECISION GRANTING PETITION
Filed: March 4, 2004 : UNDER 37 CFR 1.313(c)(2)
Attorney Docket No. **826-.1934** :

This is a decision on the petition under 37 CFR 1.313(c)(2), filed December 12, 2007, to withdraw the above-identified application from issue after payment of the issue fee.

The petition is **GRANTED.**

The above-identified application is withdrawn from issue for consideration of a submission under 37 CFR 1.114 (request for continued examination). *See* 37 CFR 1.313(c)(2).

Petitioner is advised that the issue fee paid on October 17, 2007 ***cannot be refunded. If, however, this application is again allowed, petitioner may request that it be applied towards the issue fee required by the new Notice of Allowance.***[1]

Telephone inquiries should be directed to Monica A. Graves at (571) 272-7253.

This application is being referred to Technology Center AU 2613 for processing of the request for continued examination under 37 CFR 1.114 and for consideration of the concurrently filed information disclosure statement.

Karen Creasy for
Frances Hicks
Petitions Examiner
Office of Petitions

---

[1] *The request to apply the issue fee to the new Notice may be satisfied by completing and returning the new Part B – Fee(s) Transmittal Form (along with any balance due at the time of submission). Petitioner is advised that the Issue Fee Transmittal Form* ***must*** *be completed and timely submitted to avoid abandonment of the application.*

UNITED STATES PATENT AND TRADEMARK OFFICE

Commissioner for Patents
United States Patent and Trademark Office
P.O. Box 1450
Alexandria, VA 22313-1450
www.uspto.gov

FISH & RICHARDSON P.C.
3300 DAIN RAUSCHER PLAZA
MINNEAPOLIS, MN 55402

COPY MAILED

NOV 05 2004

OFFICE OF PETITIONS

In re Application of :
Covell, et al. :
Application No. 10/792,598 :
Filed: March 2, 2004 :
Attorney Docket No. 11236-003002 :

DECISION GRANTING PETITION

This is a decision on the petition filed July 22, 2004, that is responsive to the "Notice of Omitted Items in a Nonprovisional Application" (the "Notice") mailed May 24, 2004.

On March 2, 2004, the application was deposited.

On May 24, 2004, the Office of Initial Patent Examination mailed the Notice stating that Figures 6-8 as described in the specification appeared to have been omitted from the original disclosure. The Notice allowed a non-extendable period for response of two months from its mailing date. The instant petition was filed on July 22, 2004. Petitioner concedes that Figures 6-8 were omitted from the original application papers, but argues that the subject application incorporated by reference a prior application in its entirety and, therefore, the application was complete on filing and should retain the filing date of March 2, 2004.

In this case, however, it has been determined that drawings are not necessary to understand at least one claim within the meaning of the first sentence of 35 USC 113. It has been PTO practice to treat an application that contains at least one process or method claim as an application for which a drawing is not necessary for an understanding of the invention under 35 U.S.C. 113 (first sentence). A review of the record reveals that Claims 1, 8, and 15 are method claims. Therefore, the present application is deemed to be an application that does not require drawings for an understanding of the invention. Accordingly, the application, as filed, was entitled to the filing date of March 2, 2004.

The application is being forwarded to the Office of Initial Patent Examination for further processing with a filing date of March 2, 2004. Prior to the first action on the merits, petitioner should file a preliminary amendment requesting entry of the omitted drawings.

Any inquiries related to this decision should be directed to the undersigned at (571) 272-3222.

Kenya A. McLaughlin
Petitions Attorney
Office of Petitions

UNITED STATES PATENT AND TRADEMARK OFFICE

COMMISSIONER FOR PATENTS
UNITED STATES PATENT AND TRADEMARK OFFICE
P.O. BOX 1450
ALEXANDRIA, VA 22313-1450
www.uspto.go

THOMAS, KAYDEN, HORSTEMEYER &
RISLEY, LLP
100 GALLERIA PARKWAY, NW
SUITE 1750
ATLANTA, GA 30339-5948

MAIL

MAR 1 4 2005

DIRECTOR OFFICE
TECHNOLOGY CENTER 2600

In re application of:
Thomas D. Petite, et al.
Application No. 10/792,608
Filed: March 3, 2004
For: SYSTEM AND METHOD FOR MONITORING REMOTE DEVICES WITH A DUAL-MODE WIRELESS COMMUNICATION

DECISION ON REQUEST TO WITHDRAW FROM RECORD

This is a decision on the request for withdrawal as attorney/agent and change of correspondence address filed on October 5, 2004.

A grantable request to withdraw as attorney/agent of record must:
(1) indicate the present mailing address of the attorney(s)/agent(s) who seek(s) to withdraw, and
(2) be signed by each attorney/agent seeking to withdraw or clearly be signed on their behalf, and
(3) be *approved* at least thirty (30) days prior to the maximum extendable period for response to any outstanding Office Action, and
(4) indicate the address to which future correspondence should be mailed.

Petitioner has satisfied the requirements for successfully requesting withdrawal. Accordingly, the request is **GRANTED.**

All of the attorneys/agents associated with Customer Number 24504 have been withdrawn.

All future communications from the Office will be directed to the address listed below until otherwise notified by applicant. Applicant is reminded of the obligation to promptly notify the Patent and Trademark Office of any change in correspondence address to ensure receipt of all communications from the Office.

Kenneth A. Wieder
Special Program Examiner
Technology Center 2600
Communications
(571) 272-2986

cc: Douglas D. Salyers, Esq.
Troutman Sanders LLP
Bank of America Plaza
600 Peachtree Street, N.E., Suite 5200
Atlanta, Georgia 30308-2216

UNITED STATES PATENT AND TRADEMARK OFFICE

Commissioner for Patents
United States Patent and Trademark Office
P.O. Box 1450
Alexandria, VA 22313-1450
www.uspto.gov

McKEE VOORHEES & SEASE PLC
801 GRAND AVENUE, SUITE 3200
DES MOINES, IA 5309-2721

COPY MAILED

OCT 28 2005

OFFICE OF PETITIONS

In re Application of	:
Haim Goldberger et al	:
Application No. 10/792,639	: DECISION GRANTING PETITION
Filed: March 2, 2004	: UNDER 37 CFR 1.313(c)(2)
Attorney Docket No. 096379US00	:

This is a decision on the petition, filed October 27, 2005, under 37 CFR 1.313(c)(2) to withdraw the above-identified application from issue after payment of the issue fee.

The petition is **GRANTED**.

The above-identified application is withdrawn from issue for consideration of a submission under 37 CFR 1.114 (request for continued examination). See 37 CFR 1.313(c)(2).

Petitioner is advised that the issue fee paid on August 17, 2005 in the above-identified application cannot be refunded. If, however, the above-identified application is again allowed, petitioner may request that it be applied towards the issue fee required by the new Notice of Allowance.[1]

Telephone inquiries should be directed to the undersigned at (571) 272-3218.

This matter is being referred to Technology Center AU 2831 for processing of the request for continued examination under 37 CFR 1.114 and for consideration of the concurrently filed amendment and Information Disclosure Statement.

Frances Hicks

Frances Hicks
Petitions Examiner
Office of Petitions

---

[1] *The request to apply the issue fee to the new Notice may be satisfied by completing and returning the new Issue Fee Transmittal Form PTOL-85(b) (along with any balance due or the amount due at the time of payment), which includes the following language thereon: "Commissioner for Patents is requested to apply the Issue Fee and Publication Fee (if any) or re-apply any previously paid issue fee to the application identified above." Petitioner is advised that, whether a fee is indicated as being due or not, the Issue Fee Transmittal Form* **must** *be completed and timely submitted to avoid abandonment. Note the language in bold text on the first page of the Notice of Allowance and Fee(s) Due (PTOL-85).*

UNITED STATES PATENT AND TRADEMARK OFFICE

Commissioner for Patents
United States Patent and Trademark Office
P.O. Box 1450
Alexandria, VA 22313-1450
www.uspto.gov

SCOTT D. ROTHENBERGER
DORSEY & WHITNEY LLP
INTELLECTUAL PROPERTY DEPARTMENT
50 SOUTH SIXTH STREET, SUITE 1500
MINNEAPOLIS, MN 55402-1498

COPY MAILED

SEP 15 2005

OFFICE OF PETITIONS

In re Application of :
Michael Fantuzzi et al :
Application No. 10/792,648 :
Filed: March 3, 2004 :
Attorney Docket No. 33503/US/2

ON PETITION

This is a decision on the petition, filed September 14, 2005 under 37 CFR 1.313(c)(2) to withdraw the above-identified application from issue after payment of the issue fee.

The petition is **GRANTED**.

The above-identified application is withdrawn from issue for consideration of a submission under 37 CFR 1.114 (request for continued examination). See 37 CFR 1.313(c)(2).

Petitioner is advised that the issue fee paid on August 18, 2005 in the above-identified application cannot be refunded. If, however, the above-identified application is again allowed, petitioner may request that it be applied towards the issue fee required by the new Notice of Allowance.[1]

Telephone inquiries should be directed to Irvin Dingle at (571) 272-3210.

This matter is being referred to Technology Center AU 1653 for processing of the request for continued examination under 37 CFR 1.114 and for consideration of the concurrently filed Information Disclosure Statement.

Irvin Dingle
Petitions Examiner
Office of Petitions

[1] The request to apply the issue fee to the new Notice may be satisfied by completing and returning the new Issue Fee Transmittal Form PTOL-85(b), which includes the following language thereon: Commissioner for Patents is requested to apply the Issue Fee and Publication Fee (if any) or re-apply any previously paid issue fee to the application identified above. Petitioner is advised that, whether a fee is indicated as being due or not, the Issue Fee Transmittal Form **must** be completed and timely submitted to avoid abandonment. Note the language in bold text on the first page of the Notice of Allowance and Fee(s) Due (PTOL-85).

UNITED STATES PATENT AND TRADEMARK OFFICE

Commissioner for Patents
United States Patent and Trademark Office
P.O. Box 1450
Alexandria, VA 22313-1450
www.uspto.gov

SCOTT D. ROTHENBERGER
DORSEY & WHITNEY LLP
INTELLECTUAL PROPERTY DEPARTMENT
50 SOUTH SIXTH STREET, SUITE 1500
MINNEAPOLIS MN 55402-1498

COPY MAILED
DEC 1 2 2006
OFFICE OF PETITIONS

In re Application of	:
Michael Fantuzzi et al	:
Application No. 10/792,648	: DECISION GRANTING PETITION
Filed: March 3, 2004	: UNDER 37 CFR 1.137(b)
Attorney Docket No. 33503/US/2	:

This is a decision on the petition under 37 CFR 1.137(b), filed July 27, 2006, to revive the above-identified application.

The petition is **GRANTED**.

The petition satisfies the conditions for revival pursuant to the provisions of 37 CFR 1.137(b) in that (1) the reply in the form of the issue fee and publication fee; (2) the petition fee; and (3) the required statement of unintentional delay have been received. Accordingly, the reply to the Notice of Allowance of February 15, 2006, is accepted as having been unintentionally delayed.

Telephone inquiries concerning this decision should be directed to the undersigned at (571) 272-3208.

This matter is being referred to Patent Publication.

Karen Creasy

Karen Creasy
Petitions Examiner
Office of Petitions

UNITED STATES PATENT AND TRADEMARK OFFICE

UNITED STATES DEPARTMENT OF COMMERCE
United States Patent and Trademark Office
Address: COMMISSIONER FOR PATENTS
P.O. Box 1450
Alexandria, Virginia 22313-1450
www.uspto.gov

HARNESS, DICKEY & PIERCE, P.L.C.
P.O. BOX 828
BLOOMFIELD HILLS, MI 48303

Mail Date: 04/21/2010

Applicant	: Harold W. Seeds	: DECISION ON REQUEST FOR
Patent Number	: 7585032	: RECALCULATION of PATENT
Issue Date	: 09/08/2009	: TERM ADJUSTMENT IN VIEW
Appliction No	: 10/792,661	: OF WYETH AND NOTICE OF INTENT TO
Filed	: 03/03/2004	: ISSUE CERTIFICATE OF CORRECTION
		:

The Request for Recalculation is **GRANTED** to the extent indicated.

The patent term adjustment has been determined to be **1445** days. The USPTO will *sua sponte* issue a certificate of correction reflecting the amount of PTA days determined by the recalculation.

Prior to the issuance of the certificate of correction, the USPTO will afford patentee an opportunity to be heard and request reconsideration. Accordingly, patentee has **one month or thirty (30) days**, whichever is longer, to file a request for reconsideration of this patent term adjustment calculation. See 35 U.S.C. 154(b)(3)(B)(ii) and 37 CFR 1.322(a)(4). No extensions of time will be granted under 37 CFR 1.136.

Patentee should use document code PET.OP if electronically filing a request for reconsideration of this patent term adjustment calculation. The patentee must also include the information required by 37 CFR 1.705(b)(2) and the fee required by 37 CFR 1.18(e). If patentee does not file a timely request for reconsideration of this patent term adjustment calculation including the information required by 37 CFR 1.705(b)(2) and the fee required by 37 CFR 1.18(e), the USPTO will issue a certificate of correction reflecting the PTA determination noted above.

Patentee should be aware that in order to preserve the right to review in the United States District Court for the District of Columbia of the USPTO patent term adjustment determination, patentee must ensure that he or she also take the steps required under 35 U.S.C. 154(b)(4)(A) in a timely manner. Nothing in the request for recalculation should be construed as providing an alternative time frame for commencing a civil action under 35 U.S.C. 154(b)(4)(A).

Any questions concerning this decision should be directed to the Office of Patent Legal Administration at 571-272-7702.

UNITED STATES PATENT AND TRADEMARK OFFICE

COMMISSIONER FOR PATENTS
UNITED STATES PATENT AND TRADEMARK OFFICE
P.O. BOX 1450
ALEXANDRIA, VA 22313-1450
www.uspto.gov

Paper No.

OSHA & MAY L.L.P.
ONE HOUSTON CENTER, STE. 2800
1221 McKINNEY STREET
HOUSTON, TX 77010

COPY MAILED

DEC 23 2004

OFFICE OF PETITIONS

In re Application of:
Naganthan et al.
Application No. 10/792,668
Filed: March 3, 2004
Title of Invention:
METHODS AND APPARATUS FOR MODELING TOPOLOGY OBJECTS

DECISION GRANTING STATUS UNDER 37 CFR 1.47(a)

This decision is in response to the Petition Under 37 CFR § 1.47(a), filed July 20, 2004, to allow the other inventor(s) to proceed with the application on behalf of himself or herself and the nonsigning inventor(s). The delay in treating this petition is regretted.

The petition is **granted**.

The above-identified application and papers have been reviewed and found in compliance with 37 CFR 1.47(a). This application is hereby accorded Rule 1.47(a) status.

Petitioner has shown that the non-signing inventor, Narayani Naganthan, refuses to join in the application.

As provided in Rule 1.47(a), this Office will forward notice of this application's filing to the non-signing inventor at the addresses given in the Petition. Notice of the filing of this application will also be published in the Official Gazette.

The application file is an Image File Wrapper ("IFW"), and as such, no forwarding of the file is necessary. An electronic message is being sent to the appropriate Office indicating the granting of Rule 47 status. Processing of the application will continue in due course.

Telephone inquiries related to this decision may be directed to the undersigned at (571) 272-3232.

Derek L. Woods
Attorney/Advisor
Office of Petitions

UNITED STATES PATENT AND TRADEMARK OFFICE

COMMISSIONER FOR PATENTS
UNITED STATES PATENT AND TRADEMARK OFFICE
P.O. BOX 1450
ALEXANDRIA, VA 22313-1450
www.uspto.gov

Narayani Naganthan
754 W. Knickerbocker DR.
SUNNYVALE, CA 94078

COPY MAILED
DEC 23 2004
OFFICE OF PETITIONS

In re Application of: :
Naganthan et al. :
Application No. 10/792,668 : LETTER
Filed: March 3, 2004 :
Title of Invention: :
METHODS AND APPARATUS FOR MODELING :
TOPOLOGY OBJECTS :

Dear Narayani Naganthan:

You are named as a joint inventor in the above-identified United States patent application filed under the provisions of 35 U.S.C. 116 (United States Code) and 37 CFR 1.47(a), Rules of Practice in Patent Cases. Should a patent be granted on the application you will be designated therein as a joint inventor.

As a named inventor you are entitled to inspect any paper in the file wrapper of the application, order copies of all or any part thereof (at a prepaid cost per 37 CFR 1.19) or make your position of record in the application. Alternatively, you may arrange to do any of the preceding through a registered patent attorney or agent presenting written authorization from you. If you care to join the application, counsel of record (see below) would presumably assist you. Joining in the application would entail the filing of an appropriate oath or declaration by you pursuant to 37 CFR 1.63.

Telephone inquiries regarding this communication should be directed to the undersigned at (571) 272-3232. Requests for information regarding your application should be directed to the File Information Unit at (703) 308-2733. Information regarding how to pay for and order a copy of the application, or a specific paper in the application, should be directed to Certification Division at (703) 308-9726 or 1-800-972-6382 (outside the Washington D.C. area).

Derek L. Woods
Attorney Advisor
Office of Petitions

cc: OSHA & MAY L.L.P.
ONE HOUSTON CENTER, STE. 2800
1221 McKINNEY STREET
HOUSTON, TX 77010

UNITED STATES PATENT AND TRADEMARK OFFICE

Commissioner for Patents
United States Patent and Trademark Office
P.O. Box 1450
Alexandria, VA 22313-1450
www.uspto.gov
DIW Mar-07

JOHN R. BENEFIEL
SUITE 100 B
280 DAINES STREET
BIRMINGHAM MI 48009

COPY MAILED

MAR 14 2007

OFFICE OF PETITIONS

In re Application of	:	
Richard W. Kauppila	:	
Application No. 10/792,670	:	DECISION ON PETITION
Filed: 03/03/2004	:	
Attorney Docket Number: KAU-110	:	

This is a decision on the petition filed on 11 December, 2006, under 37 CFR 1.137(b),[1] to revive the above-identified application.

The petition is **GRANTED**.

The application became abandoned on 8 December, 2006, for failure to timely submit corrected drawings in response to the Notice of

---

[1] Effective December 1, 1997, the provisions of 37 CFR 1.137(b) now provide that where the delay in reply was unintentional, a petition may be filed to revive an abandoned application or a lapsed patent pursuant to 37 CFR 1.137(b). A grantable petition filed under the provisions of 37 CFR 1.137(b) must be accompanied by:

(1) the required reply, unless previously filed. In a nonprovisional application abandoned for failure to prosecute, the required reply may be met by the filing of a continuing application. In a nonprovisional utility or plant application filed on or after June 8, 1995, and abandoned for failure to prosecute, the required reply may also be met by the filing of a request for continuing examination in compliance with § 1.114. In an application or patent, abandoned or lapsed for failure to pay the issue fee or any portion thereof, the required reply must be the payment of the issue fee or any outstanding balance thereof. In an application, abandoned for failure to pay the publication fee, the required reply must include payment of the publication fee.

(2) the petition fee as set forth in 37 CFR 1.17(m);

(3) a statement that the entire delay in filing the required reply from the due date for the reply until the filing of a grantable petition pursuant to 37 CFR 1.137(b) was unintentional. The Commissioner may required additional information where there is a question whether the delay was unintentional; and

(4) any terminal disclaimer (and fee as set forth in 37 CFR 1.20(d)) required pursuant to 37 CFR 1.137(c)).

Allowability mailed on 7 August, 2006, which set a three (3) month statutory period for reply. Notice of Abandonment was mailed on 1 December, 2006.

Receipt of the corrected drawings is acknowledged.

The application is being referred to the Publishing Division for processing into a patent.

Telephone inquiries concerning this matter may be directed to the undersigned at (571)272-3231.

D Wood

Douglas I. Wood
Senior Petitions Attorney
Office of Petitions

UNITED STATES PATENT AND TRADEMARK OFFICE

COMMISSIONER FOR PATENTS
UNITED STATES PATENT AND TRADEMARK OFFICE
P.O. BOX 1450
ALEXANDRIA, VA 22313-1450
WWW.USPTO.GOV

Paper No.

COPY MAILED

JAN 22 2009

OFFICE OF PETITIONS

J. NICHOLAS GROSS, ATTORNEY
2030 ADDISON ST.
SUITE 610
BERKELEY CA 94704

In re Application of	:	
Ian M. Bennett	:	
Application No. 10/792,674	:	DECISION ON PETITION
Filing Date: March 2, 2004	:	PURSUANT TO
Attorney Docket Number:	:	37 C.F.R. § 1.183
PHO99004CIP3	:	
Title: METHOD FOR PROCESSING	:	
SPEECH USING DYNAMIC GRAMMARS	:	

Background

This is a decision on the "PETITION TO WAIVE ADDITIONAL PHYSICAL COPY REQUIREMENT FOR NON-PATENT LITERATURE," filed on October 21, 2008. This submission is being treated as a petition pursuant to 37 C.F.R. § 1.183. Petitioner has requested the waiver of Rule § 1.98(a), with respect to the submission of copies of references cited in an Information Disclosure Statement (IDS), so as to avoid the submission of physical copies of non-patent literature.

The petition fee of $400.00 pursuant to 37 CFR § 1.17(f) for this petition pursuant to 37 CFR § 1.183 will be charged to petitioner's Deposit Account number 50-1244 in due course, as authorized in this petition.

This petition pursuant to 37 C.F.R. § 1.183 is **DISMISSED**.

A discussion follows.

Applicable Rules

37 C.F.R. §1.4(b) sets forth, *in pertinent part*:

Since each file must be complete in itself, a separate copy of every paper to be filed in a patent, patent file, or other proceeding must be furnished for each file to which the paper pertains, even though the contents of the papers filed in two or more files may be identical.

37 CFR § 1.98(a)(2) indicates:

Any information disclosure statement filed under § 1.97 shall include the items listed in paragraphs (a)(1), (a)(2) and (a)(3) of this section.

A legible copy of:
(i) Each foreign patent;
(ii) Each publication or that portion which caused it to be listed, other than U.S. patents and U.S. patent application publications unless required by the Office;
(iii) For each cited pending unpublished U.S. application, the application specification including the claims, and any drawing of the application, or that portion of the application which caused it to be listed including any claims directed to that portion; and
(iv) All other information or that portion which caused it to be listed.

37 C.F.R. §1.183 sets forth, *in toto*:

In an extraordinary situation, when justice requires, any requirement of the regulations in this part which is not a requirement of the statutes may be suspended or waived by the Director or the Director's designee, sua sponte, or on petition of the interested party, subject to such other requirements as may be imposed. Any petition under this section must be accompanied by the petition fee set forth in § 1.17(h).

Analysis

This petition has been fully considered.

Rule 1.98(a)(2) requires legible copies of certain documents listed on an IDS filed under 37 C.F.R. § 1.97 be submitted to the Office. Petitioner seeks waiver of this copy requirement for a concurrently submitted IDS listing 825 non-patent literature references. The provisions of 37 C.F.R. § 1.98(a)(2) may be waived under 37 C.F.R. § 1.183 where a petitioner demonstrates an

extraordinary situation in which justice requires suspension of the rule.

In support of this petition for waiver of the rule, Petitioner notes that physical copies of the non-U.S. patent references cited in the IDS have been filed in application number 10/684,357, which is "a parent and/or related to other pending cases maintained by Applicant."[1] Petitioner further notes that these non-U.S. patent references consist of "an estimated 10,000 pages…requiring four separate banker boxes,"[2] and that this same IDS has been presented in "more than 20 other related cases.[3] Accordingly, "[t]he cost and burden of copying and shipping such materials an additional 22 times would be extremely burdensome, and [would] result in a significant ecological waste and duplication of paper."[4] Finally, Petitioner has asserted "[t]he Examiner in the '357 application is also handling most if not all of the other 22 related cases."[5] In short, Petitioner has argued that since copies of these references were provided in the '357 application, he should not be required to provide identical copies in the present application.

Petitioner has requested, in the alternative, for the Office to permit the submission of a "CD containing electronic copies of such references in lieu of physical copies."[6]

With this petition, Petitioner has not asserted, *much less established*, the existence of an extraordinary situation such that justice requires the waiver of Rule 1.98(a)(2).

Assuming arguendo that Petitioner has asserted the existence of an extraordinary situation, such that justice requires the waiver of Rule 1.98(a)(2), it has not been established that justice requires the waiver of the Rule.

As a general rule, waiver of a Rule in the interest of justice is not available when there is recourse within the rules of practice.

Concerning Petitioner's primary request, Petitioner has requested waiver of the Rule governing submission of documents to the Office based on the alleged burden of submitting to the Office

---

1 Petition, page 1..
2 Id.
3 Id.
4 Id at 2.
5 Id.
6 Id. at 3.

physical copies of numerous references in multiple applications. In lieu of submitting to the Office physical copies of the references, however, Petitioner may use the Office's Web-based electronic filing system (EFS-Web) to submit electronic copies of the references to the Office.[7] In this way, Petitioner need only scan the references into an acceptable electronic format (e.g., Adobe Portable Document Format (PDF)) once, and can then submit the scanned references to the Office via EFS-Web in any number of applications.

Moreover, the assertion that the "Examiner in the '357 application is also handling most if not all of the other 22 related cases" does not relieve Petitioner of his obligation under Rule 1.4(b) to supply a "separate copy of every paper to be filed in a patent, patent file, or other proceeding…for each file to which the paper pertains, even though the contents of the papers filed in two or more files may be identical." It is noted in passing that Petitioner has not requested waiver of this Rule.

Regarding Petitioner's alternate request, this must also be dismissed. Petitioner has requested that the Office permit the submission of a CD containing electronic copies of the references, however the rules of practice provide a method of submitting electronic documents to the Office via EFS-Web. As such, if Petitioner wishes to submit electronic copies of the documents to the Office, these may be filed via EFS-Web.

Accordingly, for all of the reasons set forth above, Petitioner has not presented facts that demonstrate an extraordinary situation in which justice requires suspension of 37 CFR 1.98(a)(2), and the petition is dismissed.

Conclusion

The Technology Center will be notified of this decision. The Technology Center's support staff will notify the Examiner of this decision, so that the present application can receive further processing in due course.

---

7 See MPEP § 609.07 (8th ed. 2001) (Rev. 7, July 2008) (providing that "[a]s of May of 2002 IDSs may be submitted to the Office via the EFS" and that "[a]s of January 2007, an e-IDS filed via EFS-Web may include citations of U.S. patents, U.S. patent application publications, foreign patent documents and non-patent literature (NPLs)").

Telephone inquiries regarding *this decision* should be directed to the undersigned at (571) 272-3225.[8] All other inquiries concerning examination procedures or status of the application should be directed to the Technology Center.

/Paul Shanoski/
Paul Shanoski
Senior Attorney
Office of Petitions

---

8 Petitioner will note that all practice before the Office should be in writing, and the action of the Office will be based exclusively on the written record in the Office. See 37 C.F.R. § 1.2. As such, Petitioner is reminded that no telephone discussion may be controlling or considered authority for Petitioner's further action(s).

UNITED STATES PATENT AND TRADEMARK OFFICE

Commissioner for Patents
United States Patent and Trademark Office
P.O. Box 1450
Alexandria, VA 22313-1450
www.uspto.gov

PEPPER HAMILTON LLP
ONE MELLON CENTER
50TH FLOOR
PITTSBURGH PA 15219

COPY MAILED
JAN 05 2009
OFFICE OF PETITIONS

In re Application of	:	
Crain, et al.	:	
Application No. 10/792,680	:	DECISION ON PETITION
Filed: March 3, 2004	:	
Patent No. 6,975,082	:	
Issued: December 13, 2005	:	

This is in response to petition under 37 CFR 1.47(a), filed March 11, 2008.

The petition under 37 CFR 1.47(b) is **DISMISSED** as inappropriate.

A petition under 37 CFR 1.47 is only appropriate when an inventor can not be located or refuses to sign the 37 CFR 1.63 oath or declaration that is submitted on filing. It is not appropriate in the situation such as that presented here, when an inventor in an issued patent can not be located or refuses to sign an assignment document.

Petitioner is reminded that recording of an assignment is merely a ministerial act; it is not an Office determination of the validity of the assignment document nor the effect of the assignment document on the ownership of the patent property. See 37 CFR 3.54 and MPEP § 317.03.

Further correspondence with respect to this matter should be addressed as follows:

By mail: Mail Stop Petitions
Commissioner for Patents
P.O. Box 1450
Alexandria VA 22313-1450

By FAX: (571)273-8300
Attn: Office of Petitions

Telephone inquiries regarding this decision should be directed to the undersigned at (571)272-3207.

Cliff Congo
Petitions Attorney
Office of Petitions

UNITED STATES PATENT AND TRADEMARK OFFICE

Commissioner for Patents
United States Patent and Trademark Office
P.O. Box 1450
Alexandria, VA 22313-1450
www.uspto.gov

MODIANO & ASSOCIATI
VIA MERAVIGLI, 16
MILANO 20123 IT ITALY

COPY MAILED

JUL 1 3 2005

OFFICE OF PETITIONS

In re Application of :
Arrigo Zetti :
Application No. 10/792,696 :
Filed: March 5, 2004 :
Attorney Docket No. 27270/GM/CD :

ON PETITION

This is a decision on the petition, filed July 12, 2005, under 37 CFR 1.313(c)(2) to withdraw the above-identified application from issue after payment of the issue fee.

The petition is **GRANTED**.

The above-identified application is withdrawn from issue for consideration of a submission under 37 CFR 1.114 (request for continued examination). See 37 CFR 1.313(c)(2).

Petitioner is advised that the issue fee paid on June 6, 2005 in the above-identified application cannot be refunded. If, however, the above-identified application is again allowed, petitioner may request that it be applied towards the issue fee required by the new Notice of Allowance.[1]

Telephone inquiries should be directed to the undersigned at (571) 272-3208.

The examiner of Technology Center AU 3676 will consider the request for continued examination under 37 CFR 1.114.

Karen Creasy

Karen Creasy
Petitions Examiner
Office of Petitions
Office of the Deputy Commissioner
for Patent Examination Policy

---

[1] The request to apply the issue fee to the new Notice may be satisfied by completing and returning the new Issue Fee Transmittal Form PTOL-85(b), which includes the following language thereon: "Commissioner for Patents is requested to apply the Issue Fee and Publication Fee (if any) or re-apply any previously paid issue fee to the application identified above." Petitioner is advised that, whether a fee is indicated as being due or not, the Issue Fee Transmittal Form **must** be completed and timely submitted to avoid abandonment. Note the language in bold text on the first page of the Notice of Allowance and Fee(s) Due (PTOL-85).

UNITED STATES PATENT AND TRADEMARK OFFICE

COMMISSIONER FOR PATENTS
UNITED STATES PATENT AND TRADEMARK OFFICE
P.O. BOX 1450
ALEXANDRIA, VA 22313-1450
www.uspto.gov

STEVEN S. PAYNE
THE LAW OFFICE OF STEVEN S. PAYNE
8027 ILIFF DRIVE
DUNN LORING, VA 22027

COPY MAILED
SEP 19 2008

In re Application of :
Joakim Hellkvist :
Application No. 10/792,723 : ON PETITION
Filed: March 5, 2004 :
Attorney Docket No. 150-141 :

This is a decision in response to the petition, filed May 30, 2008, to revive the above-identified application under the provisions of 37 CFR 1.137(b).

The petition is **DISMISSED.**

Any request for reconsideration of this decision must be submitted within TWO (2) MONTHS from the mail date of this decision. Extensions of time under 37 CFR 1.136(a) are permitted. The reconsideration request should include a cover letter entitled "Renewed Petition under 37 CFR 1.137(b)." This is **not** a final agency action within the meaning of 5 U.S.C. § 704.

The application became abandoned for a failure to reply in a timely manner to a non-final Office action mailed December 13, 2005. A Notice of Abandonment was mailed on August 21, 2006. On May 30, 2008, the present petition was filed.

A grantable petition under 37 CFR 1.137(b) must be accompanied by: (1) the required reply, unless previously filed; (2) the petition fee as set forth in 37 CFR 1.17(m); (3) a statement that the entire delay in filing the required reply from the due date for the reply until the filing of a grantable petition pursuant to 37 CFR 1.137(b) was unintentional; and (4) any terminal disclaimer (and fee as set forth in 37 CFR 1.20(d)) required by 37 CFR 1.137(d). Where there is a question as to whether either the abandonment or the delay in filing a petition under 37 CFR 1.137 was unintentional, the Director may require additional information. *See* MPEP 711.03(c)(II)(C) and (D). The instant petition lacks item (3).

There are three periods to be considered during the evaluation of a petition under 37 CFR 1.137(b):

(1) the delay in reply that originally resulted in the abandonment;

(2) the delay in filing an initial petition pursuant to 37 CFR 1.137(b) to revive the application; and

(3) the delay in filing a grantable petition pursuant to 37 CFR 1.137(b) to revive the application.

Currently, the delay has not been shown to the satisfaction of the Director to be unintentional for periods (1) and (2).

As to Period (1):

The patent statute at 35 U.S.C. § 41(a)(7) authorizes the Director to revive an "unintentionally abandoned application." The legislative history of Public Law 97-247 reveals that the purpose of 35 U.S.C. § 41(a)(7) is to permit the Office to have more discretion than in 35 U.S.C. §§ 133 or 151 to revive abandoned applications in appropriate circumstances, but places a limit on this discretion, stating that "[u]nder this section a petition accompanied by either a fee of $500 or a fee of $50 **would not be granted where the abandonment** or the failure to pay the fee for issuing the patent **was intentional** as opposed to being unintentional or unavoidable." [emphasis added]. See H.R. Rep. No. 542, 97th Cong., 2d Sess. 6-7 (1982), *reprinted in* 1982 U.S.C.C.A.N. 770-71. The revival of an intentionally abandoned application is antithetical to the meaning and intent of the statute and regulation.

35 U.S.C. § 41(a)(7) authorizes the Director to accept a petition "for the revival of an unintentionally abandoned application for a patent." As amended December 1, 1997, 37 CFR 1.137(b)(3) provides that a petition under 37 CFR 1.137(b) must be accompanied by a statement that the delay was unintentional, but provides that "[t]he Commissioner may require additional information where there is a question whether the delay was unintentional." Where, as here, there is a question whether the initial delay was unintentional, the petitioner must meet the burden of establishing that the delay was unintentional within the meaning of 35 U.S.C. § 41(a)(7) and 37 CFR 1.137(b). *See* In re Application of G, 11 USPQ2d 1378, 1380 (Comm'r Pats. 1989); 37 CFR 1.137(b). Here, in view of the inordinate delay (over two years) in resuming prosecution, there is a question whether the entire delay was unintentional. Petitioner should note that the issue is not whether some of the delay was unintentional by any

party; rather, the issue is whether the entire delay has been shown to the satisfaction of the Director to be unintentional.

The question under 37 CFR 1.137(b) for period (1) is whether the delay on the part of the party having the right or authority to reply to avoid abandonment (or not reply) was unintentional. Accordingly, any renewed petition must clearly identify the party having the right to reply to avoid abandonment on March 14, 2006. That party, in turn must explain what effort(s) was made to further reply to the outstanding Office action and, further, why no reply was filed. If no effort was made to further reply, then that party must explain why the delay in this application does not result from a deliberate course of action (or inaction). Likewise, as Steven S. Payne was counsel of record at the time of abandonment, he should explain why this application became abandoned while under the control of The Law Office of Steven S. Payne and what efforts they made to further reply of itself and with whom this matter was discussed outside of The Law Office of Steven S. Payne. Copies of any correspondence relating to the filing, or to not filing a further reply to the outstanding Office action are required from any and all responsible person(s) having firsthand knowledge of the circumstances surrounding the lack of a reply to the outstanding Office action. As the courts have made clear, it is pointless for the USPTO to revive a long abandoned application without an adequate showing that the delay did not result from a deliberate course of action. *See* Lawman Armor v. Simon, 2005 U.S. Dist. LEXIS 10843, 74 USPQ2d 1633 (DC EMich 2005); Field Hybrids, LLC v. Toyota Motor Corp., 2005 U.S. Dist. LEXIS 1159 (D. Minn Jan. 27, 2005); Lumenyte Int'l Corp. v. Cable Lite Corp., Nos. 96-1011, 96-1077, 1996 U.S. App. LEXIS 16400, 1996 WL 383927 (Fed. Cir. July 9, 1996) (unpublished) (patents held unenforceable due to a finding of inequitable conduct in submitting an inappropriate statement that the abandonment was unintentional).

As to Period (2):

Likewise, where the applicant deliberately chooses not to seek or persist in seeking the revival of an abandoned application, or where the applicant deliberately chooses to delay seeking the revival of an abandoned application, the resulting delay in seeking revival of the abandoned application cannot be considered as "unintentional" within the meaning of 37 CFR 1.137(b). *See* MPEP 711.03(c).

The language of both 35 U.S.C. § 41(a)(7) and 37 CFR 1.137(b) are clear and unambiguous, and, furthermore, without qualification.

That is, the delay in filing the reply during prosecution, as well as in filing the petition seeking revival, must have been, without qualification, "unintentional" for the reply to now be accepted on petition. The Office requires that the entire delay be at least unintentional as a prerequisite to revival of an abandoned application to prevent abuse and injury to the public. *See* H.R. Rep. No. 542, 97th Cong., 2d Sess. 7 (1982), reprinted in 1982 U.S.C.C.A.N. 771 ("[i]n order to prevent abuse and injury to the public the Commissioner . . . could require applicants to act promptly after becoming aware of the abandonment"). The December 1997 change to 37 CFR 1.137 did not create any new right to overcome an intentional delay in seeking revival, or in renewing an attempt at seeking revival, of an abandoned application. *See* Changes to Patent Practice and Procedure; Final Rule Notice, 62 Fed. Reg. 53131, 53160 (October 10, 1997), 1203 Off. Gaz. Pat. Office 63, 87 (October 21, 1997), which clearly stated that any protracted delay (here, over two years) could trigger, as here, a request for additional information. As the courts have since made clear, a protracted delay in seeking revival, as here, requires a petitioner's detailed explanation seeking to excuse the delay as opposed to USPTO acceptance of a general allegation of unintentional delay. *See* Lawman Armor v. Simon, 2005 U.S. Dist. LEXIS 10843, 74 USPQ2d 1633, at 1637-8 (DC EMich 2005); Field Hybrids, LLC v. Toyota Motor Corp., 2005 U.S. Dist. LEXIS 1159 (D. Minn Jan. 27, 2005) at *21-*23. Statements are required from any and all persons then at The Law Office of Steven S. Payne and the responsible person(s) having firsthand knowledge of the circumstances surrounding the protracted delay, after the abandonment date, in seeking revival.

As noted in MPEP 711.03(c)(II), subsection D, in instances in which such petition was not filed within 1 year of the date of abandonment of the application, applicants should include:

> (A) the date that the applicant first became aware of the abandonment of the application; and
> (B) a showing as to how the delay in discovering the abandoned status of the application occurred despite the exercise of due care or diligence on the part of the applicant.

In either instance, applicant's failure to carry the burden of proof to establish that the "entire" delay was "unavoidable" or "unintentional" may lead to the denial of a petition under 37 CFR 1.137(b), regardless of the circumstances that originally resulted in the abandonment of the application. *See also* New

York University v. Autodesk, 2007 U.S. DIST LEXIS, U.S.District LEXIS 50832, *10 -*12 (S.D.N.Y. 2007)(protracted delay in seeking revival undercuts assertion of unintentional delay).

Any renewed petition may be addressed as follows:

By Mail: Mail Stop PETITION
Commissioner for Patents
P. O. Box 1450
Alexandria, VA 22313-1450

By hand: U. S. Patent and Trademark Office
Customer Service Window, Mail Stop Petitions
Randolph Building
401 Dulany Street
Alexandria, VA 22314

The centralized facsimile number is **(571) 273-8300.**

Correspondence regarding this decision may also be filed through the electronic filing system of the USPTO.

Telephone inquiries concerning this decision should be directed to the undersigned at (571) 272-3204.

Sherry D. Brinkley
Petitions Examiner
Office of Petitions

UNITED STATES PATENT AND TRADEMARK OFFICE

Commissioner for Patents
United States Patent and Trademark Office
P.O. Box 1450
Alexandria, VA 22313-1450
www.uspto.gov

STEVEN S. PAYNE
THE LAW OFFICE OF STEVEN S. PAYNE
8027 ILIFF DRIVE
DUNN LORING, VA 22027

MAILED

MAY 19 2009

OFFICE OF PETITIONS

In re Application of
Joakim Hellkvist
Application No. 10/792,723
Filed: March 5, 2004
Attorney Docket No. 150-141

ON PETITION

This is a decision in response to the renewed petition, filed March 23, 2009, to revive the above-identified application under the provisions of 37 CFR 1.137(b).

The petition is **GRANTED**.

The application became abandoned for a failure to reply in a timely manner to a non-final Office action mailed December 13, 2005. A Notice of Abandonment was mailed on August 21, 2006. On May 30, 2008, a petition under 37 CFR 1.137(b) was filed; however, the petition was subsequently dismissed in a decision mailed September 19, 2008. In response, on March 23, 2009, the present petition was filed.

While this application has been abandoned for an extended period of time, the U.S. Patent and Trademark Office is relying on petitioner's duty of candor and good faith and accepting the statement that "the entire delay in filing the required reply from the due date for the reply until the filing of a grantable petition pursuant to 37 CFR 1.137(b) was unintentional." *See* Changes to Patent Practice and Procedure, 62 Fed. Reg., at 53160 and 53178; 1203 Off. Gaz. Pat. Office, at 88 and 103 (responses to comments 64 and 109) (applicant obligated under 37 CFR 10.18 to inquire into the underlying facts and circumstances when providing the statement required by 37 CFR 1.137(b) to the U.S. Patent and Trademark Office).

Accordingly, the petition satisfies the conditions for revival pursuant to the provisions of 37 CFR 1.137(b) in that petitioner has supplied (1) the reply in the form of an amendment; (2) the petition fee of $770; and (3) an adequate statement of unintentional delay.

This application is being referred to Technology Center AU 3673 for appropriate action in the normal course of business on the reply received May 30, 2008.

Telephone inquiries concerning this decision should be directed to the undersigned at (571) 272-3204. Inquiries relating to further prosecution should be directed to the Technology Center.

Sherry D. Brinkley
Petitions Examiner
Office of Petitions

UNITED STATES PATENT AND TRADEMARK OFFICE

Commissioner for Patents
United States Patent and Trademark Office
P.O. Box 1450
Alexandria, VA 22313-1450
www.uspto.gov

MAIL

JUL 21 2005

DIRECTOR OFFICE
TECHNOLOGY CENTER 2600

Dr. David G. Levinsohn
Apt. 601
700 W Harbor Drive
San Diego CA 92101

In re Application of :
Steven Mark Levinsohn :
Application No. 10/792,729 : DECISION ON PETITION
Filed: March 5, 2004 : TO MAKE SPECIAL
For: **MICROPHONE ACCESSORY** :

This is a decision on the petition filed May 23, 2005 under Manual of Patent Examination Procedure §708.02,VIII requesting accelerated examination.

The petition under Manual of Patent Examination Procedure §708.02, VIII, must:
(1) be filed prior to receiving any examination by the examiner,
(2) be accompanied by the required fee- $130,
(3) the claims should be directed to a single invention (if it is determined that the claims pertain to more than one invention, then applicant will have to make an election without traverse or forfeit accelerated examination status),
(4) state that a pre-examination search was made, and fully discuss the search method employed, such as classes and subclasses searched, publications, Chemical abstracts, patents, etc. A search made by a foreign patent office satisfies this requirement,
(5) be accompanied by a copy of each of the references most closely related to the subject matter encompassed by the claims if said references are not already of record,
(6) fully discuss the references, pointing out with the particularity required by 37 C.F.R. §1.111 (b) and (c), how the claimed subject matter is patentable over the references.

The petitioner meets all the above-listed requirements. Accordingly, the petition is **GRANTED**.

The application will retain its special status throughout its entire prosecution, including any appeal to the Board of Patent Appeals and Interferences, subject only to diligent prosecution by the applicant. The application file is being forwarded to the examiner for appropriate action in due course.

Krista Zele
Special Program Examiner
Technology Center 2600
Communications

UNITED STATES PATENT AND TRADEMARK OFFICE

COMMISSIONER FOR PATENTS
UNITED STATES PATENT AND TRADEMARK OFFICE
WASHINGTON, DC 20231
www.uspto.gov

MAIL

DEC 3 0 2004

DIRECTOR OFFICE
TECHNOLOGY CENTER 2600

VLAD MITLIN
10329 AZUAGA ST. 263
SAN DIEGO, CA 92129

In re Application of:
Vlad Mitlin
Application No.: 10/792,740
Filed: March 5, 2004
For: METHOD FOR DETERMINING THE QUALITY OF A COMMUNICATION CHANNAL

DECISION ON PETITION TO MAKE SPECIAL

This is a decision on the petition filed March 12, 2004 under 37 C.F.R. §102(c) and M.P.E.P. § 708.02(III): Health, to make the above-identified application special.

A grantable petition to make special under 37 C.F.R. § 1.102(c), and M.P.E.P. § 708.02, Section III, must be accompanied a showing, as by doctor's certificate, that the state of health of the applicant is such that he/she might not be available to assist in the prosecution of the application if it were to run its normal course. No fee is required for such a petition.

The petition includes a showing of applicant's current state of health as required under M.P.E.P. § 708.02, Section III.

Accordingly, the petition is **GRANTED**.

The application file is being forwarded to the Examiner of Record for expedited examination.

Kenneth A. Wieder
Special Program Examiner
Technology Center 2600
Communications
(571) 272-2986

UNITED STATES PATENT AND TRADEMARK OFFICE

UNITED STATES DEPARTMENT OF COMMERCE
United States Patent and Trademark Office
Address: COMMISSIONER FOR PATENTS
P.O. Box 1450
Alexandria, Virginia 22313-1450
www.uspto.gov

STAAS & HALSEY LLP
SUITE 700
1201 NEW YORK AVENUE, N.W.
WASHINGTON, DC 20005

Mail Date: 04/21/2010

Applicant	: Sang-kyeong Ha	: DECISION ON REQUEST FOR
Patent Number	: 7611103	: RECALCULATION of PATENT
Issue Date	: 11/03/2009	: TERM ADJUSTMENT IN VIEW
Appliction No	: 10/792,745	: OF WYETH AND NOTICE OF INTENT TO
Filed	: 03/05/2004	: ISSUE CERTIFICATE OF CORRECTION
		:

The Request for Recalculation is **GRANTED** to the extent indicated.

The patent term adjustment has been determined to be **0** days. The USPTO will *sua sponte* issue a certificate of correction reflecting the amount of PTA days determined by the recalculation.

Prior to the issuance of the certificate of correction, the USPTO will afford patentee an opportunity to be heard and request reconsideration. Accordingly, patentee has **one month or thirty (30) days**, whichever is longer, to file a request for reconsideration of this patent term adjustment calculation. See 35 U.S.C. 154(b)(3)(B)(ii) and 37 CFR 1.322(a)(4). No extensions of time will be granted under 37 CFR 1.136.

Patentee should use document code PET.OP if electronically filing a request for reconsideration of this patent term adjustment calculation. The patentee must also include the information required by 37 CFR 1.705(b)(2) and the fee required by 37 CFR 1.18(e). If patentee does not file a timely request for reconsideration of this patent term adjustment calculation including the information required by 37 CFR 1.705(b)(2) and the fee required by 37 CFR 1.18(e), the USPTO will issue a certificate of correction reflecting the PTA determination noted above.

Patentee should be aware that in order to preserve the right to review in the United States District Court for the District of Columbia of the USPTO patent term adjustment determination, patentee must ensure that he or she also take the steps required under 35 U.S.C. 154(b)(4)(A) in a timely manner. Nothing in the request for recalculation should be construed as providing an alternative time frame for commencing a civil action under 35 U.S.C. 154(b)(4)(A).

Any questions concerning this decision should be directed to the Office of Patent Legal Administration at 571-272-7702.

UNITED STATES PATENT AND TRADEMARK OFFICE

UNITED STATES DEPARTMENT OF COMMERCE
United States Patent and Trademark Office
Address: COMMISSIONER FOR PATENTS
P.O. Box 1450
Alexandria, Virginia 22313-1450
www.uspto.gov

APPLICATION NO.	FILING DATE	FIRST NAMED INVENTOR	ATTORNEY DOCKET NO.	CONFIRMATION NO.
10/792,757	03/05/2004	Paul M. Enquist	245863US20	6801

22850 7590 01/14/2010
OBLON, SPIVAK, MCCLELLAND MAIER & NEUSTADT, L.L.P.
1940 DUKE STREET
ALEXANDRIA, VA 22314

EXAMINER
KEBEDE, BROOK

ART UNIT	PAPER NUMBER
2894	

NOTIFICATION DATE	DELIVERY MODE
01/14/2010	ELECTRONIC

Please find below and/or attached an Office communication concerning this application or proceeding.

The time period for reply, if any, is set in the attached communication.

Notice of the Office communication was sent electronically on above-indicated "Notification Date" to the following e-mail address(es):

patentdocket@oblon.com
oblonpat@oblon.com
jgardner@oblon.com

UNITED STATES PATENT AND TRADEMARK OFFICE

Commissioner for Patents
United States Patent and Trademark Office
P.O. Box 1450
Alexandria, VA 22313-1450
www.uspto.gov

Eckhard H. Kuesters
OBLON, SPIVAK, MCCLELLAND MAIER & NEUSTADT, L.L.P.
1940 DUKE STREET
ALEXANDRIA, VA 22314

IN RE APPLICATION OF	:	
PAUL M. ENQUIST, ET AL.	:	DECISION ON PETITION
SERIAL NO: 10/792,757	:	
FILED: MARCH 5, 2004	:	
FOR: WAFER SCALE DIE HANDLING	:	

This is a decision on the PETITION FROM FINAL DECISION OF ELECTION REQUIREMENT FOR THE TECHNOLOGY CENTER DIRECTORS filed June 18, 2009.

On July 17, 2008, the examiner made a restriction/election requirement. The requirement included an election of species between embodiments I-IX. In a response filed August 18, 2008, Applicant elected the species of embodiment IX, reciting claims 1-15 and 23-63 as reading on the elected species. On December 18, 2008, the examiner made the election requirement final, examined claims 59-63, and withdrew claims 1-58, and 64-82. On June 18, 2009 the instant petition was filed to formally request that claims 10-15, 27, and 53-63 be examined as reading on the elected species. Consequently, the instant petition will be treated as a petition under 37 CFR 1.181 to direct the examiner to examine withdrawn claims 10-15, 27 and 53-58.

Petitioner argues that claims 10-15, 27 and 53-63 read on elected species IX directed to a semiconductor device comprising a carrier having recesses to accommodate said die and means for securing said die during rotation of said carrier such that die are not expelled during said rotation. Claims 10-15, 27 and 53-63 read on the elected species.

Accordingly, because the withdrawing of claims 10-15, 27, and 53-58 as being directed to a non-elected species was improper, the petition is **GRANTED**. The application is being forwarded to the examiner for further action on the merits, including the examination of claims 10-15, 27 and 53-63.

Any inquiries regarding this decision should be directed to Kimberly Nguyen, Supervisory Patent Examiner, at (571) 272-2402.

Gladys Corcoran, Acting Director
Technology Center 2800
Semiconductors, Electrical and Optical
Systems and Components

PTO/SB/66 (03-09)
Approved for use through 03/31/2012. OMB 0651-0016
U.S. Patent and Trademark Office: U.S. DEPARTMENT OF COMMERCE
Under the Paperwork Reduction Act of 1995, no persons are required to respond to a collection of information unless it displays valid OMB control number.

PETITION TO ACCEPT UNINTENTIONALLY DELAYED PAYMENT OF MAINTENANCE FEE IN AN EXPIRED PATENT (37 CFR 1.378(c))

Patent Number	Issue Date (YYYY-MM-DD)	Application Number	Filing Date (YYYY-MM-DD)	Docket Number (if applicable)
6946155	2005-09-20	10792759	2004-03-05	BEN-YEHUDA1A

CAUTION: Maintenance fee (and surcharge, if any) payment must correctly identify: (1) the patent number and (2) the application number of the actual U.S. application leading to issuance of that patent to ensure the fee(s) is/are associated with the correct patent. 37 CFR 1.366(c) and (d).

SMALL ENTITY
☒ Patentee claims, or has previously claimed, small entity status. See 37 CFR 1.27.

LOSS OF ENTITLEMENT TO SMALL ENTITY STATUS
☐ Patentee is no longer entitled to small entity status. See 37 CFR 1.27(g)

NOT Small Entity		Small Entity	
Fee	Code	Fee	Code
○ 3 ½ year	(1551)	◉ 3 ½ year	(2551)
○ 7 ½ year	(1552)	○ 7 ½ year	(2552)
○ 11 ½ year	(1553)	○ 11 ½ year	(2553)

SURCHARGE
The surcharge required by 37 CFR 1.20(i)(2) (Fee Code 1558) must be paid as a condition of accepting unintentionally delayed payment of the maintenance fee.

MAINTENANCE FEE (37 CFR 1.20(e)-(g))
The appropriate maintenance fee must be submitted with this petition.

STATEMENT
THE UNDERSIGNED CERTIFIES THAT THE DELAY IN PAYMENT OF THE MAINTENANCE FEE TO THIS PATENT WAS UNINTENTIONAL

PETITIONER(S) REQUEST THAT THE DELAYED PAYMENT OF THE MAINTENANCE FEE BE ACCEPTED AND THE PATENT REINSTATED

THIS PORTION MUST BE COMPLETED BY THE SIGNATORY OR SIGNATORIES

37 CFR 1.378(d) states: "Any petition under this section must be signed by an attorney or agent registered to practice before the Patent and Trademark Office, or by the patentee, the assignee, or other party in interest."

I certify, in accordance with 37 CFR 1.4(d)(4) that I am

○ An attorney or agent registered to practice before the Patent and Trademark Office

○ A sole patentee

○ A joint patentee; I certify that I am authorized to sign this submission on behalf of all the other patentees.

○ A joint patentee; all of whom are signing this e-petition

◉ The assignee of record of the entire interest

The Assignee of record of the entire interest			
Under 37 CFR 3.71 an assignee becomes of record by filing a statement in compliance with 37 CFR 3.73(b). Signature requirements are set forth in 37 CFR 1.4(d), and the undersigned certifies that he / she is empowered to act on behalf of the assignee of the entire interest			
Signature	/Youval Saly/	Date (YYYY-MM-DD)	2009-11-30
Name	Youval Saly		
Enter Reel and Frame Number		Remove	
Reel Number	023556	Frame Number	0599
Enter Reel and Frame Number		Remove	
Reel Number	023538	Frame Number	0864
Click ADD for additional Reel Number and Frame Number		Add	

This collection of information is required by 37 CFR 1.378(c). The information is required to obtain or retain a benefit by the public which is to file (and by the USPTO to process) an application. Confidentiality is governed by 35 U.S.C. 122 and 37 CFR 1.11 and 1.14. This collection is estimated to take 1 hour to complete, including gathering, preparing, and submitting the completed application form to the USPTO. Time will vary depending upon the individual case. Any comments on the amount of time you require to complete this form and/ or suggestions for reducing this burden, should be sent to the Chief Information Officer, U.S. Patent and Trademark Office, U.S. Department of Commerce, P.O. Box 1450, Alexandria, VA 22313-1450. DO NOT SEND FEES OR COMPLETED FORMS TO THIS ADDRESS. **This form can only be used when in conjunction with EFS-Web. If this form is mailed to the USPTO, it may cause delays in reinstating the patent.**

Privacy Act Statement

The Privacy Act of 1974 (P.L. 93-579) requires that you be given certain information in connection with your submission of the attached form related to a patent application or patent. Accordingly, pursuant to the requirements of the Act, please be advised that: (1) the general authority for the collection of this information is 35 U.S.C. 2(b)(2); (2) furnishing of the information solicited is voluntary; and (3) the principal purpose for which the information is used by the U.S. Patent and Trademark Office is to process and/or examine your submission related to a patent application or patent. If you do not furnish the requested information, the U.S. Patent and Trademark Office may not be able to process and/or examine your submission, which may result in termination of proceedings or abandonment of the application or expiration of the patent.

The information provided by you in this form will be subject to the following routine uses:

1. The information on this form will be treated confidentially to the extent allowed under the Freedom of Information Act (5 U.S.C. 552) and the Privacy Act (5 U.S.C. 552a). Records from this system of records may be disclosed to the Department of Justice to determine whether the Freedom of Information Act requires disclosure of these records.

2. A record from this system of records may be disclosed, as a routine use, in the course of presenting evidence to a court, magistrate, or administrative tribunal, including disclosures to opposing counsel in the course of settlement negotiations.

3. A record in this system of records may be disclosed, as a routine use, to a Member of Congress submitting a request involving an individual, to whom the record pertains, when the individual has requested assistance from the Member with respect to the subject matter of the record.

4. A record in this system of records may be disclosed, as a routine use, to a contractor of the Agency having need for the information in order to perform a contract. Recipients of information shall be required to comply with the requirements of the Privacy Act of 1974, as amended, pursuant to 5 U.S.C. 552a(m).

5. A record related to an International Application filed under the Patent Cooperation Treaty in this system of records may be disclosed, as a routine use, to the International Bureau of the World Intellectual Property Organization, pursuant to the Patent Cooperation Treaty.

6. A record in this system of records may be disclosed, as a routine use, to another federal agency for purposes of National Security review (35 U.S.C. 181) and for review pursuant to the Atomic Energy Act (42 U.S.C. 218(c)).

7. A record from this system of records may be disclosed, as a routine use, to the Administrator, General Services, or his/her designee, during an inspection of records conducted by GSA as part of that agency's responsibility to recommend improvements in records management practices and programs, under authority of 44 U.S.C. 2904 and 2906. Such disclosure shall be made in accordance with the GSA regulations governing inspection of records for this purpose, and any other relevant (i.e., GSA or Commerce) directive. Such disclosure shall not be used to make determinations about individuals.

8. A record from this system of records may be disclosed, as a routine use, to the public after either publication of the application pursuant to 35 U.S.C. 122(b) or issuance of a patent pursuant to 35 U.S.C. 151. Further, a record may be disclosed, subject to the limitations of 37 CFR 1.14, as a routine use, to the public if the record was filed in an application which became abandoned or in which the proceedings were terminated and which application is referenced by either a published application, an application open to public inspections or an issued patent.

9. A record from this system of records may be disclosed, as a routine use, to a Federal, State, or local law enforcement agency, if the USPTO becomes aware of a violation or potential violation of law or regulation.

UNITED STATES PATENT AND TRADEMARK OFFICE

Commissioner for Patents
United States Patent and Trademark Office
P.O. Box 1450
Alexandria, VA 22313-1450
www.uspto.gov

In re Patent No. 6946155
Issue Date: September 20,2005
Application No. 10792759
Filed: March 5,2004
Attorney Docket No. BEN-YEHUDA=1A

:
:DECISION GRANTING PETITION
:UNDER 37 CFR 1.378(c)
:

This is a decision on the electronic petition, filed December 4,2009 ,under 37 CFR 1.378(c) to accept the unintentionally delayed payment of the 3.5 year maintenance fee for the above-identified patent.

The petition is **GRANTED**.

The maintenance fee is accepted, and the above-identified patent reinstated as of December 4,2009 . This decision also constitutes notice that the fee has been accepted. An electronic copy of the petition and this decision has been created as an entry in the Image File Wrapper. Nevertheless, petitioner should print and retain an independent copy.

Telephone inquiries related to this electronic decision should be directed to the Electronic Business Center at 1-866-217-9197.

UNITED STATES PATENT AND TRADEMARK OFFICE

Commissioner for Patents
United States Patent and Trademark Office
P.O. Box 1450
Alexandria, VA 22313-1450
www.uspto.gov

MAILED
FROM DIRECTORS OFFICE

NOV 22 2005

TECHNOLOGY CENTER 3600

MCGINN & GIBB, PLLC
8321 Old Courthouse Road
Suite 200
Vienna, VA 22182-3817

In re Application of
Ryu Yokoyama
Application No. 10/792,784
Filed: March 5, 2004
For: OPTICAL AMPLIFIER, OPTICAL AMPLIFYING REPEATER AND TRANSMISSION APPARATUS OF WAVELENGTH DIVISION MULTIPLEXED SIGNAL LIGHT USING THE SAME

DECISION ON THE PETITION REGARDING REQUEST TO WITHDRAW FINALITY

Applicant's petition under 37 CFR 1.181, filed September 2, 2005, requests withdrawal of the finality of the Final office action mailed June 17, 2005.

The petition is **DISMISSED**.

A review of the file reveals that a Request for Continued Examination was filed September 19, 2005. Thus, the issue of the premature finality of the June 17, 2005 Office action is moot.

The petition for withdrawal of the finality is **DISMISSED**.

Any questions or comments with respect to the decision should be forwarded to Supervisory Patent Examiner, Jack Keith at (571) 272-6878.

Donald T. Hajec, Director
Patent Technology Center 3600
(571) 272-5150

DTH/jwk: 11/18/05

SPE RESPONSE FOR CERTIFICATE OF CORRECTION

Paper No.: _____

DATE : 2/9/07

TO SPE OF : ART UNIT 1756

SUBJECT : Request for Certificate of Correction on Patent No.: 7105210

A response is requested with respect to the accompanying request for a certificate of correction.

Please complete this form and return with file, within 7 days to:
Palm location **7580, Certificates of Correction Branch – South Tower – 9A22**
If response is for an IFW, **return to employee (named below) via PUBSCofC Team in MADRAS.**
With respect to the change(s) requested, correcting Office and/or Applicant's errors, should the patent read as shown in the certificate of correction (COCIN)? No new matter should be introduced, nor should the scope or meaning of the claims be changed.

Valerie Jackson

Thank You For Your Assistance

Certificates of Correction Branch
Tel. No. 703-308-9390 ext. 114

The request for issuing the above-identified correction(s) is hereby:
Note your decision on the appropriate box.

- [x] **Approved** — **All** changes apply.
- [ ] **Approved in Part** — Specify below which changes **do not** apply.
- [ ] **Denied** — State the reasons for denial below.

Comments:

SPE

1756
Art Unit

SPE RESPONSE FOR CERTIFICATE OF CORRECTION

Paper No.: 50

DATE : 3-20-07

TO SPE OF : ART UNIT 2851

SUBJECT : Request for Certificate of Correction for Appl. No.: 10/792795 Patent No.: 7116476

Please respond to this request for a certificate of correction within 7 days.

Please review the requested changes/corrections as shown in the **COCIN** document(s) in the IFW application image. No new matter should be introduced, nor should the scope or meaning of the claims be changed.

Please check claims

Please complete the response (see below) and forward the completed response to scanning using document code **COCX**.

Certificates of Correction Branch

703-308-9390 ext. 117

Thank You For Your Assistance

The request for issuing the above-identified correction(s) is hereby:

Note your decision on the appropriate box.

- ☐ **Approved** — All changes apply.
- ☐ **Approved in Part** — Specify below which changes do not apply.
- ☒ **Denied** — State the reasons for denial below.

Comments: The Certificate of Correction filed on March 27, 2007 (03/27/07) does not reflect how the claims as allowed should be printed. Cn.

2862

PATRICK ASSOUAD
SUPERVISORY PATENT EXAMINER
SPE

Art Unit

SPE RESPONSE FOR CERTIFICATE OF CORRECTION

Paper No.: 49

DATE : 3-20-07

TO SPE OF : ART UNIT 2851

SUBJECT : Request for Certificate of Correction for Appl. No.: 10/792795 Patent No.: 7116476

Please respond to this request for a certificate of correction within 7 days.

Please review the requested changes/corrections as shown in the **COCIN** document(s) in the IFW application image. No new matter should be introduced, nor should the scope or meaning of the claims be changed.

Please check Claims

Please complete the response (see below) and forward the completed response to scanning using document code **COCX**.

Certificates of Correction Branch

703-308-9390 ext. 117

Thank You For Your Assistance

The request for issuing the above-identified correction(s) is hereby:

Note your decision on the appropriate box.

- ☐ **Approved** — All changes apply.
- ☐ **Approved in Part** — Specify below which changes do not apply.
- ☒ **Denied** — State the reasons for denial below.

Comments: The certificate of correction filed February 26, 2007 (2/26/07) does not reflect how the claims as allowed should be printed. CW.

PATRICK ASSOUAD
SUPERVISORY PATENT EXAMINER

SPE

2862

Art Unit

UNITED STATES PATENT AND TRADEMARK OFFICE

Commissioner for Patents
United States Patent and Trademark Office
P.O. Box 1450
Alexandria, VA 22313-1450
www.uspto.gov

Date Mailed : June 23, 2008

Patent No. : 7,116,476
Patent Issued : Oct.3, 2006
Docket No. : 1163-0497P

Re: Request for Certificate of Correction

Consideration has been given your request for the issuance of a certificate of correction for the above-identified patent under the provisions of Rule(s)1.322 .

The alleged error(s) The Certificate of Correction filed February 26,2007 does not reflect how the claims as allowed should be printed. the patent is printed in accordance with the record .In view of the foregoing, your request, in this matter(s), is hereby denied.

Further consideration/reconsideration will be given upon receipt of a Request for Reconsideration under, under the provision of U.SC.254 or 255 (C.F.R. 1.322 or 1.323), accompanied by the appropriate response or fee of $100, which should be directed to Decisions & Certificates of Correction Branch.

Ennis Young
Legal Instrument Examiner
(703) 308-9390 ext.117
For Mary Diggs, Supervisor
Decisions & Certificates of Correction Branch
(703) 308-9390 ext.125 or (703) 303-8309 (Receptionist)

UNITED STATES PATENT AND TRADEMARK OFFICE

Commissioner for Patents
United States Patent and Trademark Office
P.O. Box 1450
Alexandria, VA 22313-1450
www.uspto.gov

Date Mailed June 24, 2008

Patent No. : 7,116,476
Patent Issued : Oct. 3, 2006
Docket No. : 1163-0497P

Re: Request for Certificate of Correction

Consideration has been given your request for the issuance of a certificate of correction for the above-identified patent under the provisions of Rule(s)1.322 .

The alleged error(s) The Certificate of Correction filed on March 27, 2007 does not reflect how the claims as allowed should be printed. the patent is printed in accordance with the record. In view of the foregoing, your request, in this matter(s), is hereby denied.

Further consideration/reconsideration will be given upon receipt of a Request for Reconsideration under, under the provision of U.SC.254 or 255 (C.F.R. 1.322 or 1.323), accompanied by the appropriate response or fee of $100, which should be directed to Decisions & Certificates of Correction Branch.

Ennis Young
Legal Instrument Examiner
(703) 308-9390 ext. 117

For Cecelia B. Newman, Supervisor
Decisions & Certificates of Correction Branch
(703) 308-9390 ext. 125 or (703) 303-8309 (Receptionist)

SPE RESPONSE FOR CERTIFICATE OF CORRECTION

DATE : 10/08 Paper No.: _____

TO SPE OF : ART UNIT 2851

SUBJECT : Request for Certificate of Correction for Appl. No.: 10/792795 Patent No.: 7116479

Please respond to this request for a certificate of correction within 7 days.

FOR IFW FILES:

Please review the requested changes/corrections as shown in the **COCIN** document(s) in the IFW application image. No new matter should be introduced, nor should the scope or meaning of the claims be changed.

Please Review claims filed 4-17-08

Please complete the response (see below) and forward the completed response to scanning using document code **COCX**.

FOR PAPER FILES:

Please review the requested changes/corrections as shown in the attached certificate of correction. Please complete this form (see below) and forward it with the file to:

Certificates of Correction Branch (CofC)
South Tower - 9A22
Palm Location 7580

Emis Young
Certificates of Correction Branch
703-308-9390 ext. 117

Thank You For Your Assistance

The request for issuing the above-identified correction(s) is hereby:
Note your decision on the appropriate box.

- [x] **Approved** — All changes apply.
- [ ] **Approved in Part** — Specify below which changes **do not** apply.
- [ ] **Denied** — State the reasons for denial below.

Comments: _____

Patricia Assouad

SPE

2862
Art Unit

UNITED STATES PATENT AND TRADEMARK OFFICE

Commissioner for Patents
United States Patent and Trademark Office
P.O. Box 1450
Alexandria, VA 22313-1450
www.uspto.gov

COPY MAILED

SEP 25 2006

OFFICE OF PETITIONS

Melanie L. McCollum
Oliff & Berridge, PLC
P.O. Box 19928
Alexandria, VA 22320

In re Application of	:	
Vanina Filippi et al.	:	
Application No. 10/792,801	:	DECISION ON PETITION
Filed: March 5, 2004	:	TO WITHDRAW
Attorney Docket No. 118919	:	FROM RECORD
	:	

This is a decision on the Request to Withdraw as attorney or agent under 37 C.F.R. § 1.36(b) or 37 C.F.R. § 10.40 filed July 11, 2006.

The request is **APPROVED**.

A review of the file record indicates that Melanie L. McCollum: (1) does not have power of attorney in this patent application; and (2) has been employed or otherwise engaged in the proceedings in this patent application. In view of the present decision, Melanie L. McCollum has/have been withdrawn from the present application and may not prepare or submit papers under 37 C.F.R. § 1.34, or correspond in any manner in this application unless appointed in an acceptable power of attorney under 37 C.F.R. § 1.32(b).

The correspondence address of record remains unchanged.

The attorneys and/or agents associated with Oliff & Berridge remains of record.

There is no outstanding Office action at this time.

Telephone inquires concerning this decision should be directed to Terri Williams at 571-272-2991.

for David Bucci
Petitions Examiner
Office of Petitions

UNITED STATES PATENT AND TRADEMARK OFFICE

Commissioner for Patents
United States Patent and Trademark Office
P.O. Box 1450
Alexandria, VA 22313-1450
www.uspto.gov

OLIFF & BERRIDGE, PLC
P.O. BOX 19928
ALEXANDRIA VA 22320

COPY MAILED
MAY 18 2006
OFFICE OF PETITIONS

In re Application of :
Naoya Kamimura :
Application No. 10/792,855 :
Filed: March 5, 2004 :
Attorney Docket No. 118959 :

ON PETITION

This is a decision on the petition, filed May 17, 2006, under 37 CFR 1.313(c)(2) to withdraw the above-identified application from issue after payment of the issue fee.

The petition is **GRANTED**.

The above-identified application is withdrawn from issue for consideration of a submission under 37 CFR 1.114 (request for continued examination). See 37 CFR 1.313(c)(2).

Petitioner is advised that the issue fee paid on December 9, 2005, in the above-identified application cannot be refunded. If, however, the above-identified application is again allowed, petitioner may request that it be applied towards the issue fee required by the new Notice of Allowance.[1]

Telephone inquiries should be directed to the undersigned at (571) 272-3208.

The examiner of Technology Center AU 2859 will consider the request for continued examination under 37 CFR 1.114.

Karen Creasy
Petitions Examiner
Office of Petitions

---

[1] The request to apply the issue fee to the new Notice may be satisfied by completing and returning the new Issue Fee Transmittal Form PTOL-85(b), which includes the following language thereon: "Commissioner for Patents is requested to apply the Issue Fee and Publication Fee (if any) or re-apply any previously paid issue fee to the application identified above." Petitioner is advised that, whether a fee is indicated as being due or not, the Issue Fee Transmittal Form **must** be completed and timely submitted to avoid abandonment. Note the language in bold text on the first page of the Notice of Allowance and Fee(s) Due (PTOL-85).

UNITED STATES PATENT AND TRADEMARK OFFICE

COMMISSIONER FOR PATENTS
UNITED STATES PATENT AND TRADEMARK OFFICE
P.O. BOX 1450
ALEXANDRIA, VA 22313-1450
www.uspto.gov

Paper No. _____

Date : May 18, 2006

TO : Director, Office of Patent Publication

FROM : Office of the Deputy Commissioner
for Patent Examination Policy

SUBJECT : Withdrawal from Issue of

Applicant(s) :Naoya Kamimura
Application No. :10/792,855
Filed :March 5, 2004

The above-identified application has been assigned Patent No. 7,050,740 and an issue date of May 23, 2006.

It is hereby directed that this application be withdrawn from issue at the request of the applicant.

Do not refund the issue fee.

The following erratum should be published in the Official Gazette if the above-identified application is published in the OG of May 23, 2006:

"All reference to Patent No. 7,050,740 to Naoya Kamimura of Japan for IMAGE FORMING APPARATUS AND PROCESS CARTRIDGE appearing in the Official Gazette of May 23, 2006 should be deleted since no patent was granted."

Karen Creasy

Karen Creasy
Petitions Examiner
Office of Petitions
Office of the Deputy Commissioner
for Patent Examination Policy

cc: Paul Harrison, MDW-4B03,(FAX-273-5468)
Deneise Boyd, MDE-3D39 (FAX-273-5124)
Mary Louise McAskill, ST-8C15 (FAX 305-4372)
Niomi Farmer, ST-8C14 (FAX-305-4372)
Mary E. Johnson (Cookie), MDE-7C71 (FAX 273-0038
Duane Davis P/OPC MDE-7D89

UNITED STATES PATENT AND TRADEMARK OFFICE

Commissioner for Patents
United States Patent and Trademark Office
P.O. Box 1450
Alexandria, VA 22313-1450
www.uspto.gov

COPY MAILED
SEP 14 2006
OFFICE OF PETITIONS

OLIFF & BERRIDGE, PLC
P.O. BOX 19928
ALEXANDRIA VA 22320

In re Application of	:	
Naoya Kamimura	:	
Application No. 10/792,855	:	ON PETITION
Filed: March 5, 2004	:	
Attorney Docket No. 118959	:	

This is a decision on the petition filed September 13, 2006, under 37 CFR 1.313(c)(2), requesting withdrawal of the above-identified application from issue.

The petition is **dismissed** as moot for the reasons stated below.

A review of the file record discloses that a Notice of Allowance was mailed on June 14, 2006, with the issue fee being due on or before September 14, 2006. Even though, the petition states that the issue fee has been paid, the issue fee has not been paid.

37 CFR 1.313(c)(2) provides for withdrawal of an application from issue after payment of the issue fee. In the instant case, as noted above, the issue fee in reply to the Notice of Allowance of June 14, 2006, has not been received. Therefore, the filing of a petition to withdraw this application from issue is unnecessary at this time. The mere filing of an RCE and submission will effectively withdraw an application from issue prior to payment of the issue fee. In view thereof, the petition to withdraw from issue is dismissed as involving a moot issue.

Inquiries concerning this decision may be directed to the undersigned at (571) 272-3208.

This matter is being referred to Technology Center Art Unit 2859.

Karen Creasy

Karen Creasy
Petitions Examiner
Office of Petitions

UNITED STATES PATENT AND TRADEMARK OFFICE

Commissioner for Patents
United States Patent and Trademark Office
P.O. Box 1450
Alexandria, VA 22313-1450
www.uspto.gov

3-13-07

gm

In re application of	:	
Murata et al.	:	DECISION
Serial No. 10/792,859	:	GRANTING
Filed: March 5, 2004	:	PETITION
For: GRANULAR EPOXY RESIN,	:	
PRODUCTION METHOD THEREOF,	:	
AND GRANULAR EPOXY RESIN PACKAGE	:	

This is a decision on the PETITION UNDER 37 CFR 1.181(a), filed on February 12, 2007.

On April 10, 2006, a restriction requirement was mailed, requiring restriction between groups I, II, and III, drawn to an epoxy resin, method of making the resin, and package comprising the resin, respectively. The package claims were dependent claims which depended from claim 1 to the resin. On April 21, 2006, applicant elected the resin without traverse. Eventually all claims to the resin were allowed in the allowance dated January 9, 2007. The allowance included an examiner's amendment canceling all non-elected claims (claims 4-8). Applicant does not contest the cancellation of claims 4 and 5 to the method of making the resin, but objects to the cancellation of claims 6-8 to the package.

The instant petition was timely filed on February 12, 2007 and is before the Director of Technology Center 1700 for consideration.

The petition requests rejoinder and examination of claims 6-8.

The petition is **GRANTED** for the reasons below.

DECISION

MPEP 821.04(a) states in part:

> When all claims to the nonelected invention(s) depend from or otherwise require all the limitations of an allowable claim, applicant must be advised that claims drawn to the nonelected invention have been rejoined and the restriction requirement has been withdrawn.

In the instant case, all claims drawn to invention III, the package of claims 6-8, depend from allowed claim 1 and include all limitations therein and thus rejoinder of inventions I and III is required.

Accordingly, the petition of February 12, 2007 is **GRANTED.**

The allowance and examiner's amendment of January 9, 2007 are hereby withdrawn. The examiner is instructed to examine claims 6-8 on the merits and issue a new Office action accordingly. In the event claims 6-8 are not allowable for any reason, the next Office action will be non-final. Should claims 6-8 be found allowable by the examiner, a supplemental Notice of Allowance will be mailed indicating the allowance of claims 1-3 and 6-8 and the cancellation of claims 4 and 5.

JMStone

Jacqueline M. Stone, Director
Technology Center 1700
Chemical and Materials Engineering

KANESAKA BERNER AND PARTNERS PATENT AGENTS, LLP
Suite 310
1700 Diagonal Road
Alexandria VA 22314

UNITED STATES PATENT AND TRADEMARK OFFICE

Commissioner for Patents
United States Patent and Trademark Office
P.O. Box 1450
Alexandria, VA 22313-1450
www.uspto.gov

HUNTON & WILLIAMS
SUITE 1200
1900 K STREET, N.W.
WASHINGTON, DC 20006-1109

COPY MAILED
AUG 2 6 2004
OFFICE OF PETITIONS

In re Application of	:	
Samir S. Mitragotri et al	:	
Application No. 10/792,862	:	NOTICE
Filed: March 5, 2004	:	
Attorney Docket No. 62803.000048	:	

This is a notice regarding your request for acceptance of a fee deficiency submission under 37 CFR 1.28. On September 1, 1998, the Court of Appeals for the Federal Circuit held that 37 CFR 1.28(c) is the sole provision governing the time for correction of the erroneous payment of the issue fee as a small entity. **See DH Technology v. Synergystex International, Inc. 154 F.3d 1333, 47 USPQ2d 1865 (Fed. Cir. Sept. 1, 1998).**

The Office no longer investigates or rejects original or reissue applications under 37 CFR 1.56. **1098 Off. Gaz. Pat. Office 502 (January 3, 1989)**. Therefore, nothing in this Notice is intended to imply that an investigation was done.

Your fee deficiency submission under 37 CFR 1.28 is hereby **ACCEPTED**.

Inquiries related to this communication should be directed to the Office of Petitions Staff at (703) 305-9285.

This matter is being referred to Technology Center AU 3763.

Wan Laymon
Petitions Examiner
Office of Petitions
Office of the Deputy Commissioner
for Patent Examination Policy

UNITED STATES PATENT AND TRADEMARK OFFICE

Commissioner for Patents
United States Patent and Trademark Office
P.O. Box 1450
Alexandria, VA 22313-1450
www.uspto.gov

BIRCH STEWART KOLASCH & BIRCH
PO BOX 747
FALLS CHURCH VA 22040-0747

COPY MAILED

AUG 0 4 2008

In re Application of	:	
YAMAMOTO, et al.	:	
Application No. 10/792,874	:	DECISION GRANTING PETITION
Filed: March 5, 2004	:	UNDER 37 CFR 1.313(c)(2)
Attorney Docket No. 0505-1275P	:	

This is a decision on the petition under 37 CFR 1.313(c)(2), filed July 23, 2008, to withdraw the above-identified application from issue after payment of the issue fee.

The petition is GRANTED.

The above-identified application is withdrawn from issue for consideration of a submission under 37 CFR 1.114 (request for continued examination). *See* 37 CFR 1.313(c)(2).

Petitioner is advised that the issue fee paid on June 30, 2008 cannot be refunded. If, however, this application is again allowed, petitioner may request that it be applied towards the issue fee required by the new Notice of Allowance.[1]

Telephone inquiries should be directed to the undersigned at (571) 272-7253.

This application is being referred to Technology Center AU 2837 for processing of the request for continued examination under 37 CFR 1.114 and for consideration of the concurrently filed information disclosure statement.

Monica A. Graves
Petitions Examiner
Office of Petitions

---

[1] *The request to apply the issue fee to the new Notice may be satisfied by completing and returning the new Part B – Fee(s) Transmittal Form (along with any balance due at the time of submission). Petitioner is advised that the Issue Fee Transmittal Form* ***must*** *be completed and timely submitted to avoid abandonment of the application.*

UNITED STATES PATENT AND TRADEMARK OFFICE

Commissioner for Patents
United States Patent and Trademark Office
P.O. Box 1450
Alexandria, VA 22313-1450
www.uspto.gov

HUNTON & WILLIAMS
SUITE 1200
1900 K STREET, N.W.
WASHINGTON, DC 20006-1109

COPY MAILED

AUG 2 6 2004

OFFICE OF PETITIONS

In re Application of	:	
Samir S. Mitragotri et al	:	
Application No. 10/792,886	:	NOTICE
Filed: March 5, 2004	:	
Attorney Docket No. 62803.000047	:	

This is a notice regarding your request for acceptance of a fee deficiency submission under 37 CFR 1.28. On September 1, 1998, the Court of Appeals for the Federal Circuit held that 37 CFR 1.28(c) is the sole provision governing the time for correction of the erroneous payment of the issue fee as a small entity. **See DH Technology v. Synergystex International, Inc. 154 F.3d 1333, 47 USPQ2d 1865 (Fed. Cir. Sept. 1, 1998).**

The Office no longer investigates or rejects original or reissue applications under 37 CFR 1.56. **1098 Off. Gaz. Pat. Office 502 (January 3, 1989).** Therefore, nothing in this Notice is intended to imply that an investigation was done.

Your fee deficiency submission under 37 CFR 1.28 is hereby **ACCEPTED**.

Inquiries related to this communication should be directed to the Office of Petitions Staff at (703) 305-9285.

This matter is being referred to Technology Center AU 3763.

Wan Laymon
Petitions Examiner
Office of Petitions
Office of the Deputy Commissioner
for Patent Examination Policy

UNITED STATES PATENT AND TRADEMARK OFFICE

COMMISSIONER FOR PATENTS
UNITED STATES PATENT AND TRADEMARK OFFICE
P.O. BOX 1450
ALEXANDRIA, VA 22313-1450
WWW.USPTO.GOV

Paper No. None

KLAUBER & JACKSON
411 HACKENSACK AVENUE
HACKENSACK NJ 07601

COPY MAILED
MAY 17 2006
OFFICE OF PETITIONS

In re Application of
Judith A. Kelleher et al.
Application No. 10/792,910
Filed: March 5, 2004
Attorney Docket Number: 005699-514
Title: ALPHA-ARYL-N-ALKYLNITRONES AND PHARMACEUTICAL COMPOSITIONS CONTAINING THE SAME

DECISION ON PETITION UNDER 37 C.F.R. §1.137(B)

This is a decision on the petition filed April 17, 2006, pursuant to 37 C.F.R. §1.137(b)[1], to revive the above-identified application.

The above-identified application became abandoned for failure to reply in a timely manner to the non-final Office action, mailed September 1, 2005, which set a shortened statutory period for reply of three (3) months. No response was received, and no extensions of time under the provisions of 37 C.F.R. §1.136(a) were requested. Accordingly, the above-identified application became abandoned on December 2, 2005. A notice of abandonment was mailed on March 7, 2006.

The present petition was received on April 17, 2006, along with the petition fee, an amendment, and the proper statement of

1 A grantable petition pursuant to 37 CFR 1.137(b) must be accompanied by:
(1) The reply required to the outstanding Office action or notice, unless previously filed;
(2) The petition fee as set forth in § 1.17(m);
(3) A statement that the entire delay in filing the required reply from the due date for the reply until the filing of a grantable petition pursuant to this paragraph was unintentional. The Commissioner may require additional information where there is a question whether the delay was unintentional, and;
(4) Any terminal disclaimer (and fee as set forth in § 1.20(d)) required pursuant to paragraph (d) of this section.

unintentional delay. No terminal disclaimer is required.

As such, the petition is **GRANTED**.

The Technology Center will be notified of this decision. The Technology Center's support staff will notify the Examiner of this decision, so that the concurrently submitted amendment can be processed.

The general phone number for the Office of Petitions which should be used for status requests is (571) 272-3282. Telephone inquiries regarding *this decision* should be directed to the undersigned at (571) 272-3225.

Paul Shanoski
Senior Attorney
Office of Petitions
United States Patent and Trademark Office

UNITED STATES PATENT AND TRADEMARK OFFICE

Commissioner for Patents
United States Patent and Trademark Office
P.O. Box 1450
Alexandria, VA 22313-1450
www.uspto.gov

COPY MAILED

SEP 19 2007

OFFICE OF PETITIONS

Morrison & Foerster LLP
1650 Tysons Boulevard
Suite 400
Mclean, VA 22102

In re Application of	:	
Bernhard Bohmer et al.	:	
Application No. 10/792,912	:	DECISION ON PETITION
Filed: March 5, 2004	:	TO WITHDRAW
Attorney Docket No. 449122070200	:	FROM RECORD
	:	

This is a decision on the Request to Withdraw as attorney or agent of record under 37 C.F.R. § 1.36(b), filed May 17, 2007.

The request is **NOT APPROVED** as moot.

A review of the file record indicates that the power of attorney to Morrison & Foerster LLP has been revoked by the assignee of the patent application on September 11, 2007. Accordingly, the request to withdraw under 37 C.F.R. § 1.36(b) is moot.

All future communications from the Office will continue to be directed to the below-listed address until otherwise notified by applicant.

Telephone inquires concerning this decision should be directed to Terri Williams at 571-272-2991.

T. Williams

Terri Williams
Petitions Examiner
Office of Petitions

cc: **Bell, Boyd & Lloyd, LLP**
P.O. Box 1135
Chicago, IL 60690

UNITED STATES PATENT AND TRADEMARK OFFICE

Commissioner for Patents
United States Patent and Trademark Office
P.O. Box 1450
Alexandria, VA 22313-1450
www.uspto.gov

STEIN, MCEWEN & BUI, LLP
1400 EYE STREET, NW
SUITE 300
WASHINGTON DC 20005

COPY MAILED

JAN 0 7 2008

OFFICE OF PETITIONS

In re Application of	:	
Sung-Hee Hwang et al	:	
Application No. 10/792,919	:	DECISION GRANTING PETITION
Filed: March 5, 2004	:	UNDER 37 CFR 1.313(c)(2)
Attorney Docket No. 1293.1754	:	

This is a decision on the petition under 37 CFR 1.313(c)(2), filed January 4, 2008, to withdraw the above-identified application from issue after payment of the issue fee.

The petition is **GRANTED**.

The above-identified application is withdrawn from issue for consideration of a submission under 37 CFR 1.114 (request for continued examination). *See* 37 CFR 1.313(c)(2).

Petitioner is advised that the issue fee paid on August 16, 2007 cannot be refunded. If, however, this application is again allowed, petitioner may request that it be applied towards the issue fee required by the new Notice of Allowance.[1]

Telephone inquiries should be directed to the undersigned at (571) 272-3208.

This application is being referred to Technology Center AU 2627 for processing of the request for continued examination under 37 CFR 1.114 and for consideration of the concurrently filed amendment.

Karen Creasy

Karen Creasy
Petitions Examiner
Office of Petitions

---

[1] *The request to apply the issue fee to the new Notice may be satisfied by completing and returning the new Part B – Fee(s) Transmittal Form (along with any balance due at the time of submission). Petitioner is advised that the Issue Fee Transmittal Form* ***must*** *be completed and timely submitted to avoid abandonment of the application.*

UNITED STATES PATENT AND TRADEMARK OFFICE

Commissioner for Patents
United States Patent and Trademark Office
P.O. Box 1450
Alexandria, VA 22313-1450
www.uspto.gov

FASSE PATENT ATTORNEYS, P.A.
P.O. BOX 726
HAMPDEN ME 04444-0726

COPY MAILED

JUL 0 8 2004

OFFICE OF PETITIONS

In re Application of
Kuroda et al.
Application No. 10/792,965
Filed: March 3, 2004
Attorney Docket No. 4651

: DECISION GRANTING PETITION

This is a decision on the petition filed June 9, 2004, requesting that the above-identified application be accorded a filing date of March 3, 2004, instead of the presently accorded filing date of March 4, 2004.

Petitioners request the earlier filing date on the basis that the application was purportedly deposited in Express Mail service on March 3, 2004, pursuant to the requirements of 37 CFR 1.10. In support, petitioners supplied a copy of Express Mail label EV415086162US which bears a "date in" of March 4, 2004. The Express Mail Label has been altered purportedly by a U.S. Postal Employee to reflect a "date in" of March 3, 2004. The petition is also accompanied by a copy of the Utility Patent Application Transmittal form with the above-mentioned Express Mail number, and a statement by Karin Smith.

Paragraph (a) of 37 CFR 1.10 states that:

> Any correspondence received by the Patent and Trademark Office (Office) that was delivered by the "Express Mail Post Office to Addressee" service of the United States Postal Service (USPS) will be considered filed in the Office on the date of deposit with the USPS. The date of deposit with the USPS is shown by the "date-in" on the "Express Mail" mailing label or other official USPS notation. If the USPS deposit date cannot be determined, the correspondence will be accorded the Office receipt date as the filing date.[1] (emphasis added)

Paragraph (d) of 37 CFR 1.10 states that:

> Any person filing correspondence under this section that was received by the

[1] See 37 CFR 1.6(a).

Office and delivered by the "Express Mail Post Office to Addressee" service of the USPS, who can show that the "date-in" on the "Express Mail" mailing label or other official notation entered by the USPS was incorrectly entered or omitted by the USPS, may petition the Commissioner to accord the correspondence a filing date as of the date the correspondence is shown to have been deposited with the USPS, provided that:

(1) The petition is filed promptly after the person becomes aware that the Office has accorded, or will accord, a filing date based upon an incorrect entry by the USPS;

(2) The number of the "Express Mail" mailing label was placed on the paper(s) or fee(s) that constitute the correspondence prior to the original mailing by "Express Mail"; and

(3) The petition includes a showing which establishes, to the satisfaction of the Commissioner, that the requested filing date was the date the correspondence was deposited in "Express Mail Post Office to Addressee" service prior to the last scheduled pickup for that day. Any showing pursuant to this paragraph must be corroborated by evidence from the USPS or that came into being after deposit and within one business day of the deposit of the correspondence in the "Express Mail Post Office to Addressee" service of the USPS. Any statement submitted in support of such a showing pursuant to this paragraph must be a verified statement if made by a person other than an employee of the USPS or a practitioner as defined in § 10.1(r) of this chapter.

A review of the copy of the Express Mail receipt EV415086162US indicates an altered "date in" of March 3, 2004. Such evidence alone would not sufficiently establish the mail was deposited on March 3, 2004. However, a review of the U.S. Postal Service's tracking system shows Express Mail package bearing label EV415086162US was accepted and enroute on March 3, 2004.

In view thereof, the petition is GRANTED.

The application is being forwarded to the Office of Initial Patent Examination (OIPE) for **correction of the filing date to March 3, 2004** and for issuance of a corrected filing receipt.

This application is being forwarded to the Office of Initial Patent Examination for further processing.

Telephone inquiries may be directed to the undersigned at (703) 306-0251.

Charlema R. Grant

Charlema R. Grant
Petitions Attorney
Office of Petitions

UNITED STATES PATENT AND TRADEMARK OFFICE

UNITED STATES DEPARTMENT OF COMMERCE
United States Patent and Trademark Office
Address: COMMISSIONER FOR PATENTS
P.O. Box 1450
Alexandria, Virginia 22313-1450
www.uspto.gov

APPL NO.	FILING OR 371 (c) DATE	ART UNIT	FIL FEE REC'D	ATTY.DOCKET NO	DRAWINGS	TOT CLMS	IND CLMS
10/792,965	03/03/2004	2833	770	4651	13	20	1

CONFIRMATION NO. 4651

CORRECTED FILING RECEIPT

OC000000013368446

021553
FASSE PATENT ATTORNEYS, P.A.
P.O. BOX 726
HAMPDEN, ME 04444-0726

Date Mailed: 07/29/2004

Receipt is acknowledged of this regular Patent Application. It will be considered in its order and you will be notified as to the results of the examination. Be sure to provide the U.S. APPLICATION NUMBER, FILING DATE, NAME OF APPLICANT, and TITLE OF INVENTION when inquiring about this application. Fees transmitted by check or draft are subject to collection. Please verify the accuracy of the data presented on this receipt. **If an error is noted on this Filing Receipt, please write to the Office of Initial Patent Examination's Filing Receipt Corrections, facsimile number 703-746-9195. Please provide a copy of this Filing Receipt with the changes noted thereon. If you received a "Notice to File Missing Parts" for this application, please submit any corrections to this Filing Receipt with your reply to the Notice. When the USPTO processes the reply to the Notice, the USPTO will generate another Filing Receipt incorporating the requested corrections (if appropriate).**

Applicant(s)

Keiji Kuroda, Amagasaki-shi, JAPAN;
Kiyoshi Aramoto, Osaka, JAPAN;
Ryo Moriwake, Osaka, JAPAN;

Assignment For Published Patent Application

J. S. T. Mfg. Co., Ltd., Osaka, JAPAN;

Domestic Priority data as claimed by applicant

Foreign Applications

JAPAN 2003-62578 03/07/2003

If Required, Foreign Filing License Granted: 05/24/2004

Projected Publication Date: 09/09/2004

Non-Publication Request: No

Early Publication Request: No

Title

Plug connector housing with locking mechanism and plug connector with locking mechanism

using thereof

Preliminary Class

439

LICENSE FOR FOREIGN FILING UNDER
Title 35, United States Code, Section 184
Title 37, Code of Federal Regulations, 5.11 & 5.15

GRANTED

The applicant has been granted a license under 35 U.S.C. 184, if the phrase "IF REQUIRED, FOREIGN FILING LICENSE GRANTED" followed by a date appears on this form. Such licenses are issued in all applications where the conditions for issuance of a license have been met, regardless of whether or not a license may be required as set forth in 37 CFR 5.15. The scope and limitations of this license are set forth in 37 CFR 5.15(a) unless an earlier license has been issued under 37 CFR 5.15(b). The license is subject to revocation upon written notification. The date indicated is the effective date of the license, unless an earlier license of similar scope has been granted under 37 CFR 5.13 or 5.14.

This license is to be retained by the licensee and may be used at any time on or after the effective date thereof unless it is revoked. This license is automatically transferred to any related applications(s) filed under 37 CFR 1.53(d). This license is not retroactive.

The grant of a license does not in any way lessen the responsibility of a licensee for the security of the subject matter as imposed by any Government contract or the provisions of existing laws relating to espionage and the national security or the export of technical data. Licensees should apprise themselves of current regulations especially with respect to certain countries, of other agencies, particularly the Office of Defense Trade Controls, Department of State (with respect to Arms, Munitions and Implements of War (22 CFR 121-128)); the Office of Export Administration, Department of Commerce (15 CFR 370.10 (j)); the Office of Foreign Assets Control, Department of Treasury (31 CFR Parts 500+) and the Department of Energy.

NOT GRANTED

No license under 35 U.S.C. 184 has been granted at this time, if the phrase "IF REQUIRED, FOREIGN FILING LICENSE GRANTED" DOES NOT appear on this form. Applicant may still petition for a license under 37 CFR 5.12, if a license is desired before the expiration of 6 months from the filing date of the application. If 6 months has lapsed from the filing date of this application and the licensee has not received any indication of a secrecy order under 35 U.S.C. 181, the licensee may foreign file the application pursuant to 37 CFR 5.15(b).

SPE RESPONSE FOR CERTIFICATE OF CORRECTION

Paper No.: _____

DATE : **5/31/2006**

TO SPE OF : ART UNIT **1600 (1654)**

SUBJECT : Request for Certificate of Correction on Patent No.: **7,037,516**

A response is requested with respect to the accompanying request for a certificate of correction.

Please complete this form and return with file, within **7** days to:
Certificates of Correction Branch – 2900 South Tower ste.9A43A
Palm location **7580** - Tel. No. 305-8309

With respect to the change(s) requested, correcting Office and/or Applicant's errors, should the patent read as shown in the certificate of correction? No new matter should be introduced, nor should the scope or meaning of the claims be changed.

Ok to make changes to claims 5 and ~~6~~ as req. in COCIN in Madras SN 10/792992?

O.K. To change claims 4 and 5

Ernest C. White, LIE (703) 308-9390x122

Thank You For Your Assistance — **Certificates of Correction Branch**

The request for issuing the above-identified correction(s) is hereby:
Note your decision on the appropriate box.

- ☒ **Approved** — **All** changes apply.
- ☐ **Approved in Part** — Specify below which changes **do not** apply.
- ☐ **Denied** — State the reasons for denial below.

Comments:

Cecilia J. Tsang
Supervisory Patent Examiner
Technology Center 1600

SPE

1654
Art Unit

UNITED STATES PATENT AND TRADEMARK OFFICE

Commissioner for Patents
United States Patent and Trademark Office
P.O. Box 1450
Alexandria, VA 22313-1450
www.uspto.gov

9/26/07

HARNESS, DICKEY & PIERCE, P.L.C.
P.O. BOX 8910
RESTON VA 20195

In re Application of:
Sankot, Phillip W.
Serial No.: 10/793,012
Filed: March 5, 2004
Docket: 1100-000002/US

Title: DISPOSABLE CONTAGION TRANSMISSION PREVENTION DEVICE AND METHOD OF USING A DISPOSABLE CONTAGION TRANSMISSION PREVENTION DEVICE

DECISION ON PETITION

This is a decision on the petition received on June 30, 2006, seeking to suspend action on the above-identified application for a period of three months. This petition is being considered pursuant to 37 CFR § 1.103(c). The petitioner has enclosed the requisite $130.00 petition fee.

The petition is dismissed as moot.

The record shows that:

1) On June 30, 2006, the petitioner filed the instant petition requesting a three-month suspension of examination along with a request for continued examination.
2) After three months, on October 10, 2006, the examiner mailed a non-final rejection.
3) On January 11, 2007 the application became abandoned for failure to respond to the October 10, 2006 Office action.
4) On July 3, 2007, a notice of abandonment was mailed to the applicant.

In light of the fact that no action was taken on this application from June 30,2006 until October 10, 2006 which is exactly what the petitioner had requested, this petition has been rendered moot.

The applicant may wish to consider filing a petition to revive under 37 CFR 1.137(b). The rules and MPEP sections cited, along with the fees associated for each may be found on the USPTO website at: www.uspto.gov. Any inquiry regarding this decision should be directed to Henry Yuen, Special Programs Examiner at (571)-272-4856.

PETITION DISMISSED AS MOOT

Karen M. Young

Karen Young, Director
Technology Center 3700

UNITED STATES PATENT AND TRADEMARK OFFICE

Commissioner for Patents
United States Patent and Trademark Office
P.O. Box 1450
Alexandria, VA 22313-1450
www.uspto.gov

NIXON PEABODY, LLP
401 9TH STREET, NW
SUITE 900
WASHINGTON DC 20004-2128

COPY MAILED

SEP 2 8 2005

OFFICE OF PETITIONS

In re Application of	:
Burczynski et al.	:
Application No. 10/793,032	: DECISION ON PETITION
Filed: March 5, 2004	: UNDER 37 CFR 1.78(a)(3)
Attorney Docket No. 031896-013100	: UNDER 37 CFR 1.78(a)(6)

This is a decision on the petitions under 37 CFR §§ 1.78(a)(3) and 1.78(a)(6), filed July 1, 2005, to accept an unintentionally delayed claim under 35 U.S.C. §§120 and 119(e) for the benefit of the prior-filed applications set forth in the concurrently filed amendment and Application Data Sheet (ADS).

The petitions are **GRANTED**.

A petition for acceptance of a claim for late priority under 37 CFR §§ 1.78(a)(3) and 1.78(a)(6) is only applicable to those applications filed on or after November 29, 2000. Further, the petition is appropriate only after the expiration of the period specified in 37 CFR §§ 1.78(a)(2)(ii) and 1.78(a)(5)(ii). In addition, the petition under 37 CFR §§ 1.78(a)(3) and 1.78(a)(6) must be accompanied by:

(1) the reference required by 35 U.S.C. §§ 120 and 119(e) and 37 CFR §§ 1.78(a)(2)(i) and 1.78(a)(5)(i) of the prior-filed application, unless previously submitted;
(2) the surcharge set forth in § 1.17(t); and
(3) a statement that the entire delay between the date the claim was due under 37 CFR §§ 1.78(a)(2)(ii) and 1.78(a)(5)(ii) and the date the claim was filed was unintentional. The Commissioner may require additional where there is a question whether the delay was unintentional.

The intermediate nonprovisional application was filed within twelve months of provisional Application No. 60/446,133, which was filed on February 11, 2003, for which priority is claimed. A reference to the prior-filed applications has been included in an amendment to the first sentence of the specification following the title and an ADS.

The amendment submitted with the instant petition is not acceptable as drafted since it improperly incorporates by reference the prior-filed applications. Petitioner's attention is directed to Dart Industries v. Banner, 636 F.2d 684, 207 USPQ 273 (C.A.D.C. 1980), where the court drew a distinction between a permissible 35 U.S.C. § 120 statement and the impermissible introduction of new matter by way of incorporation by reference in a 35 U.S.C. § 120 statement. The court specifically stated:

> Section 120 merely provides a mechanism whereby an application becomes entitled to benefit of the filing date of an earlier application disclosing the same subject matter. Common subject matter must be disclosed, in both applications, either specifically or by an express incorporation-by-reference of prior disclosed subject matter. Nothing in section 120 itself operates to carry forward any disclosure from an earlier application. In re deSeversky, supra at 674, 177 USPQ at 146-147. Section

> 120 contains no magical disclosure-augmenting powers able to pierce new matter barriers. It cannot, therefore, "limit" the absolute and express prohibition against new matter contained in section 251.

In order for the incorporation by reference statement to be effective as a proper safeguard against the omission of a portion of a prior application, the incorporation by reference statement must be included in the specification-as-filed, or in an amendment specifically referred to in an oath or declaration executing the application. *See* In re deSeversky, *supra*. *Note also* MPEP 201.06(c).

However, since petitioner also submitted an ADS, which properly listed the benefit claims, it will be used in lieu of the incorrect amendment.

The instant nonprovisional application was filed after November 29, 2000, and the claim for priority herein is submitted after expiration of the period specified in 37 CFR §§ 1.78(a)(2)(ii) and 1.78(a)(5)(ii). *See* 35 U.S.C. §§ 120 and § 119(e). Accordingly, having found that the instant petition satisfies the conditions of 37 CFR §§ 1.78(a)(3) and 1.78(a)(6) for acceptance of an unintentionally delayed claim for priority under 35 U.S.C. §§ 120 and 365(c) and § 119(e), the petition to accept an unintentionally delayed claim of benefit to the prior-filed applications is granted.

The granting of the petition to accept the delayed benefit claim to the prior-filed applications under 37 CFR §§ 1.78(a)(3) and 1.78(a)(6) should not be construed as meaning that the instant application is entitled to the benefit of the filing date of the prior-filed applications. In order for the instant application to be entitled to the benefit of the prior-filed applications, all other requirements under 35 U.S.C. §120 and 1.78(a)(1) and (a)(2) and under 35 U.S.C. §119(e) and 37 CFR 1.78(a)(4) and (a)(5) must be met. Similarly, the fact that the corrected Filing Receipt accompanying this decision on petition includes the prior-filed applications should not be construed as meaning that applicant is entitled to the claim for benefit of priority to the prior-filed applications noted thereon. Accordingly, the examiner will, in due course, consider this benefit claim and determine whether the instant application is entitled to the benefit of the earlier filing date.

A corrected Filing Receipt, which includes the priority claim to the prior-filed applications, accompanies this decision on petition.

Any questions concerning this matter may be directed to Paralegal Liana Chase at (571) 272-3206.

This matter is being referred to Technology Center Art Unit 1631 for appropriate action on the amendment submitted July 1, 2005, including consideration by the examiner of the claim under 35 U.S.C. § §120 and 365(c) and 37 CFR 1.78(a)(2) for the benefit of the prior-filed application, and for consideration of the claim under 35 U.S.C. §119(e) and 37 CFR 1.78(a)(5) for the benefit of the prior-filed provisional applications.

Liana Chase
Petitions Examiner
Office of Petitions

ATTACHMENT: Corrected Filing Receipt

UNITED STATES PATENT AND TRADEMARK OFFICE

Commissioner for Patents
United States Patent and Trademark Office
P.O. Box 1450
Alexandria, VA 22313-1450
www.uspto.gov

April 4, 2007

Patent No. : 7,111,682 B2
Ser. No. : 10/896262
Inventor(s) : Blaisdell
Issued : September 26, 2006
Title : **METHOD AND APPARATUS FOR GAS DISPLACEMENT WELL SYSTEMS**
Docket No. : BLAI0001

Re: Request for Certificate of Correction

Consideration has been given your request for the issuance of a certificate of correction for the above-identified patent under the provisions of Rules 1.322 and 1.323.

A petition under C.F.R. 1.182 is required to correct errors in spelling or order of inventors names or addresses, since inventor's names or addresses are printed solely in accordance with the type-written names and address and in the order of the type- written names and address on the Declaration, and since the error was the result of applicant's failure to comply with the requirement that the complete and correct names and addresses in correct order be indicated on the Declaration of Oath, no correction is in order here under the provisions of Rules 1.323, unless a petition is granted.

In view of the foregoing, your request is hereby denied.

However, a petition under 37 CFR 1.182 should be directed to the attention of the Assistant Commissioner for Patents using the following mailing address or FAX number.

By Mail: Commissioner of Patents and Trademarks
P.O. Box 1450
Alexandria, VA 22313-1450

By Fax: (571) 273-8300
Attn: Office of Petitions

Further correspondence concerning this matter should be filed and directed to Decisions

and Certificates of Correction Branch.

Elisha Evans
Cecelia Newman, Supervisor
Decisions & Certificates
of Correction Branch
703 308- 9390 EXT. 110

GLENN PATENT GROUP
3475 EDISON WAY, SUITE L
MENLO PARK CA 94025

CBN/eme

UNITED STATES PATENT AND TRADEMARK OFFICE

Commissioner for Patents
United States Patent and Trademark Office
P.O. Box 1450
Alexandria, VA 22313-1450
www.uspto.gov

FORTKORT GRETHER & KELTON LLP
9442 N. CAPITAL OF TEXAS HWY.
ARBORETUM PLAZA ONE, SUITE 500
AUSTIN TX 78759

COPY MAILED

SEP 14 2007

OFFICE OF PETITIONS

In re Application of

CAROLAN, David B. et al.
Application No. 10/793,066
Filed: March 04, 2004
Attorney Docket No. **NCMM001US1**

DECISION ON PETITION
TO WITHDRAW
FROM RECORD

This is a decision on the Request to Withdraw as attorney or agent of record under 37 C.F.R. § 1.36(b), filed August 09, 2007.

The request is **APPROVED**.

A grantable request to withdraw as attorney/agent of record must be signed by every attorney/agent seeking to withdraw or contain a clear indication that one attorney is signing on behalf of another/others. A request to withdraw will not be approved unless at least 30 (thirty) days would remain between the date of approval and the later of the expiration date of a time to file a response or the expiration date of the maximum time period which can be extended under 37 C.F.R. § 1.136(a).

The request was signed by John Fortkort on behalf of all attorneys of record who are associated.
All attorneys/agents associated have been withdrawn. Applicant is reminded that there is no attorney of record at this time.

The request to change the correspondence of record is not acceptable as the requested correspondence address is not that of: (1) the first named signing inventor; or (2) an intervening assignee of the entire interest under 37 C.F.R 3.71. All future communications from the Office will be directed to the first named signing inventor at the first copied address below until otherwise properly notified by the applicant.

Telephone inquiries concerning this decision should be directed to Tredelle Jackson at 571-272-2783.

Monica A. Graves
Petitions Examiner
Office of Petitions

cc: **DAVID B. CAROLAN**
12400 STATE HWY 71W, #350
AUSTIN, TEXAS 78738

cc: **JOHN L. NEEDHAM**
RIVERSIDE RESOURCES
100 CONGRESS AVENUE
AUSTIN, TX 78701

UNITED STATES PATENT AND TRADEMARK OFFICE

UNITED STATES DEPARTMENT OF COMMERCE
United States Patent and Trademark Office
Address: COMMISSIONER FOR PATENTS
P.O. Box 1450
Alexandria, Virginia 22313-1450
www.uspto.gov

Meyertons, Hood, Kivlin, Kowert, Goetzel/Symantec
P.O. Box 398
Austin, TX 78767-0398

Mail Date: 04/20/2010

Applicant	: Dhrubajyoti Borthakur	: DECISION ON REQUEST FOR
Patent Number	: 7636710	: RECALCULATION of PATENT
Issue Date	: 12/22/2009	: TERM ADJUSTMENT IN VIEW
Appliction No	: 10/793,070	: OF WYETH AND NOTICE OF INTENT TO
Filed	: 03/04/2004	: ISSUE CERTIFICATE OF CORRECTION
		:

The Request for Recalculation is **GRANTED** to the extent indicated.

The patent term adjustment has been determined to be **1328** days. The USPTO will *sua sponte* issue a certificate of correction reflecting the amount of PTA days determined by the recalculation.

Prior to the issuance of the certificate of correction, the USPTO will afford patentee an opportunity to be heard and request reconsideration. Accordingly, patentee has **one month or thirty (30) days**, whichever is longer, to file a request for reconsideration of this patent term adjustment calculation. See 35 U.S.C. 154(b)(3)(B)(ii) and 37 CFR 1.322(a)(4). No extensions of time will be granted under 37 CFR 1.136.

Patentee should use document code PET.OP if electronically filing a request for reconsideration of this patent term adjustment calculation. The patentee must also include the information required by 37 CFR 1.705(b)(2) and the fee required by 37 CFR 1.18(e). If patentee does not file a timely request for reconsideration of this patent term adjustment calculation including the information required by 37 CFR 1.705(b)(2) and the fee required by 37 CFR 1.18(e), the USPTO will issue a certificate of correction reflecting the PTA determination noted above.

Patentee should be aware that in order to preserve the right to review in the United States District Court for the District of Columbia of the USPTO patent term adjustment determination, patentee must ensure that he or she also take the steps required under 35 U.S.C. 154(b)(4)(A) in a timely manner. Nothing in the request for recalculation should be construed as providing an alternative time frame for commencing a civil action under 35 U.S.C. 154(b)(4)(A).

Any questions concerning this decision should be directed to the Office of Patent Legal Administration at 571-272-7702.

UNITED STATES PATENT AND TRADEMARK OFFICE

Commissioner for Patents
United States Patent and Trademark Office
P.O. Box 1450
Alexandria, VA 22313-1450
www.uspto.gov

Foley and Lardner LLP
Suite 500
3000 K Street NW
Washington, DC 20007

COPY MAILED

OCT 2 8 2008

OFFICE OF PETITIONS

In re Application of	:	
Hiroyuki Adachi, et al.	:	
Application No. 10/793,075	:	DECISION ON PETITION
Filed: March 4, 2004	:	TO WITHDRAW
Attorney Docket No. 13034-301US	:	FROM RECORD
	:	

This is a decision on the Request to Withdraw as attorney or agent of record under 37 C.F.R. § 1.36(b), filed September 26, 2008.

The request is **NOT APPROVED** because it is moot.

A review of the file record indicates that the power of attorney to Foley and Lardner LLP has been revoked by the applicant of the patent application on September 19, 2008. Accordingly, the request to withdraw under 37 C.F.R. § 1.36(b) is moot.

All future communications from the Office will continue to be directed to the below-listed address until otherwise notified by applicant.

Telephone inquires concerning this decision should be directed to Terri Williams at 571-272-2991.

Terri Williams
Petitions Examiner
Office of Petitions

cc: **Masuvalley & Partners**
8765 Aero Drive
Suite 312
San Diego, CA 92123

UNITED STATES PATENT AND TRADEMARK OFFICE

COMMISSIONER FOR PATENTS
UNITED STATES PATENT AND TRADEMARK OFFICE
P.O. BOX 1450
ALEXANDRIA, VA 22313-1450
WWW.USPTO.GOV

Paper No.

COPY MAILED
DEC 21 2007
OFFICE OF PETITIONS

FOLEY & LARDNER LLP
150 EAST GILMAN STREET
P.O. BOX 1497
MADISON WI 53701-1497

In re Application of Etienne Cautenet and Philippe De Talhouet Application No. 10/793,076 Filed: March 4, 2004 Attorney Docket No. 052546-0372 Title: HIGH PRESSURE LOW VOLUME PUMP	DECISION ON PETITION UNDER 37 C.F.R. § 1.47(A)

This is in response to the petition submitted on October 29, 2007, under 37 C.F.R. § 1.47(a)[1].

This petition is **DISMISSED**.

---

1 A grantable petition under 37 C.F.R. §1.47(a) requires:
(1) the petition fee of $200;
(2) a surcharge of either $65 or $130 if the petition is not filed at the time of filing the application, as set forth in 37 C.F.R. § 1.16(f);
(3) a statement of the last known address of the non-signing inventors;
(4) either
a) proof that a copy of the entire application (specification, claims, drawings, and the oath or declaration) was sent or given to the non-signing inventor for review and proof that the non-signing inventor refuses to join in the application or
b) proof that the non-signing inventor cannot be found or reached after diligent effort, and;
(5) a declaration which complies with 37 C.F.R. § 1.63.

On March 4, 2004, the application was deposited, identifying Etienne Cautenet and Philippe De Talhouet as joint inventors. On July 31, 2007, applicant was mailed a Notice of Allowance and Issue Fee Due, which required a new oath or declaration, as the declaration that was submitted of filing was found to be defective.

With the present petition, Petitioner has submitted, *inter alia*, a declaration that has been executed by Philippe De Talhouet, the petition fee, the last-known address for non-signing joint inventor Etienne Cautenet, and proof that a complete copy of the application was sent to this address.

Petitioner has met requirements (1) - (3) of Rule § 1.47(a).

Regarding the fourth requirement of Rule § 1.47(a), Petitioner mailed a letter to the last known address of Etienne Cautenet, and this mailing was not deliverable, as this individual does not reside at this address. Petitioner has asserted that he "attempted to identify an additional address for Etienne Cautenet using the Internet, but was unable to identify any other address."

It does not appear that Petitioner has provided any details of the efforts to obtain this information, and as such, it **cannot be determined whether the search comprised a diligent effort to locate the non-signing inventor.** On renewed petition, Petitioner will need to provide a showing detailing the attempts that were made to obtain a forwarding address or to locate the non-signing inventor by means such as through E-mail, telephone, or the Internet. If it is then averred that such attempts failed, then applicant will have provided the necessary proof required under 37 C.F.R. § 1.47 that the inventor cannot be reached. Details of the efforts to locate the non-signing inventor should be set forth in an affidavit or declaration of facts by a person with first hand knowledge of the details.

Regarding the fifth requirement of Rule § 1.47(a), Petitioner has not submitted a declaration that complies with 37 C.F.R. § 1.63. The declaration submitted with the instant petition contains non-initialed and non-dated changes by signing inventor Philippe De Talhouet [2].

Any reply must be submitted within **TWO MONTHS** from the mail date of this decision.

---

2 See 37 C.F.R. § 1.52(c)(1) and M.P.E.P. § 605.04(a).

Extensions of time under 37 C.F.R. § 1.136(a) are permitted. The reply should include a cover letter entitled "Renewed Petition Under 37 C.F.R. § 1.47(a)".

This is not a final agency action within the meaning of 5 U.S.C. § 704.

The renewed petition should indicate in a prominent manner that the attorney handling this matter is Paul Shanoski, and may be submitted by mail[3], hand-delivery[4], or facsimile[5]. Registered users of EFS-Web may alternatively submit a response to this decision via EFS-Web[6].

On renewed petition, Petitioner must attempt to locate the non-signing inventor, as Petitioner has actual knowledge that the last known address is invalid. If Petitioner is able to locate this individual, he must send a complete copy of the application to that address and provide this individual with an appropriate period of time to respond before filing a renewed petition.

If responding by mail, Petitioner is advised not to place the undersigned's name on the envelope. Only the information that appears in the footnote should be included - adding anything else to the address will delay the delivery of the response to the undersigned.

Telephone inquiries regarding *this decision* should be directed to the undersigned at (571) 272-3225[7]. All other inquiries concerning examination procedures or status of the application should be directed to the Technology Center.

Paul Shanoski
Senior Attorney
Office of Petitions

---

3 Mail Stop Petition, Commissioner for Patents, United States Patent and Trademark Office, P.O. Box 1450, Alexandria, VA, 22313-1450.
4 Customer Window, Randolph Building, 401 Dulaney Street, Alexandria, VA, 22314.
5 (571) 273-8300- please note this is a central facsimile number.
6 https://sportal.uspto.gov/authenticate/authenticateuserlocalepf.html
7 Petitioner will note that all practice before the Office should be in writing, and the action of the Office will be based exclusively on the written record in the Office. See 37 C.F.R. § 1.2. As such, Petitioner is reminded that no telephone discussion may be controlling or considered authority for any further action(s) of Petitioner.

UNITED STATES PATENT AND TRADEMARK OFFICE

Commissioner for Patents
United States Patent and Trademark Office
P.O. Box 1450
Alexandria, VA 22313-1450
www.uspto.gov
DIW Nov-06

QUARLES & BRADY LLP
RENAISSANCE ONE
TWO NORTH CENTRAL AVENUE
PHOENIX AZ 85004-2391

COPY MAILED

NOV 30 2006

OFFICE OF PETITIONS

In re Application of	:	
Barbara Lehman	:	DECISION ON PETITION TO
Application No. 10/793,078	:	WITHDRAW HOLDING OF
Filed: 3 March, 2004	:	ABANDONMENT
Attorney Docket No.	:	
122307.00003	:	

This is a decision on the petition filed under 37 CFR 1.181 on 29 September, 2006, which is treated as a petition to withdraw the holding of abandonment in the above-identified application.

The petition is **GRANTED**.

The application was held abandoned for failure to timely submit a response to the final Office action mailed on 12 January, 2006, which set a three (3) month shortened statutory period for reply. Notice of Abandonment was mailed on 10 August, 2006.

Petitioner asserts that a response to the non-final Office action was timely filed by facsimile on 12 April, 2006. In support, petitioner has supplied a copy of a Request for Continued Examination (RCE) and an amendment to the claims. The RCE request transmittal sheet contains a Certificate of Mailing or Transmission dated 12 April, 2006, signed by Mantza O'Neill. Petitioner has also supplied a copy of the USPTO's Auto-Reply Facsimile Transmission showing 25 pages, including the cover sheet, were received at the USPTO on 12 April, 2006.

Any petition to withdraw the holding of abandonment based on a Certificate of Transmission by facsimile must include the following requirements:

(1) A copy of the original response bearing a signed Certificate of Transmission which includes the date of signing; and

(2) A statement under 37 CFR 1.8(b)(3) attesting to the personal knowledge of transmitting the ***original*** response on the date indicated on the Certificate of Transmission (*see* 37 CFR 1.8 and MPEP 512).

Petitioner further asserts that the RCE Request and amendment inadvertently miscaptioned the application number as "10/793,073". Under current Office procedure, a response that has an incorrect serial number is handled in accordance with M.P.E.P. § 508.03. If a paper having an incorrect serial number contains sufficient information to identify the correct application and was timely received at the Office, the holding of abandonment will be withdrawn. In reviewing the papers which were submitted, it is concluded that there was sufficient information thereon to associate the papers with the present application file.

The papers filed on 12 April, 2006, have been located in the Office. A copy of the papers has been placed in the file of the subject application.

As petitioner has provided convincing evidence that a reply to the Office communication was transmitted to the USPTO on 12 April, 2006, the showing of record is that a response was timely filed, and there is no abandonment in fact. Any inconvenience caused to applicant is regretted.

The holding of abandonment is <u>withdrawn</u>, and the Notice of Abandonment is <u>vacated</u>.

The application is being referred to the Technology Center Art Unit 2672 for further processing.

Telephone inquiries concerning this matter may be directed to the undersigned at (571)272-3231.

D Wood

Douglas I. Wood
Senior Petitions Attorney
Office of Petitions

UNITED STATES PATENT AND TRADEMARK OFFICE

Commissioner for Patents
United States Patent and Trademark Office
P.O. Box 1450
Alexandria, VA 22313-1450
www.uspto.gov

David R. Preston & Associates
5850 Oberlin Drive
Suite 300
San Diego, CA 92121

COPY MAILED
JUL 21 2006
OFFICE OF PETITIONS

In re Application of	:	
Bo Coa	:	
Application No. 10/793,104	:	DECISION ON PETITION
Filed: March 3, 2004	:	TO WITHDRAW
Attorney Docket No. SBT-00101.P.2	:	FROM RECORD
	:	

This is a decision on the Request to Withdraw as attorney or agent of record under 37 C.F.R. § 1.36(b), filed October 17, 2005.

The request is **APPROVED**.

A grantable request to withdraw as attorney/agent of record must be signed by every attorney/agent seeking to withdraw or contain a clear indication that one attorney is signing on behalf of another/others. A request to withdraw will not be approved unless at least 30 (thirty) days would remain between the date of approval and the later of the expiration date of a time to file a response or the expiration date of the maximum time period which can be extended under 37 C.F.R. § 1.136(a).

The request was signed by David R. Preston on behalf of all attorneys of record who are associated with Customer No. 24232.

All attorneys/agents associated with the Customer Number 24232 have been withdrawn.

Applicant is reminded that there is no attorney of record at this time.

All future correspondence will be directed to the first named inventor Bo Coa at the address indicated below.

The request to change the correspondence of record is not acceptable as the requested correspondence address is not that of: (1) the first named signing inventor; or (2) an intervening assignee of the entire interest under 37 C.F.R 3.71. All future communications from the Office will be directed to the first named signing inventor or the assignee of the entire interest at the first copied address below until otherwise properly notified by the applicant.
There is no outstanding Office action at this time.

Telephone inquiries concerning this decision should be directed to Terri Williams at 571-272-2991.

for David Bucci
Petitions Examiner
Office of Petitions

cc: Bo Coa
13F Bldg. 2
966 Huai Hai Zhong Rd.
Shanghai, China 200031

cc: Frank Xu, CEO
SemiBio Technology
13F Building 2
966 Huai Hai Zhong Rd.
Shanghai,China 200031

UNITED STATES PATENT AND TRADEMARK OFFICE

UNITED STATES DEPARTMENT OF COMMERCE
United States Patent and Trademark Office
Address: COMMISSIONER FOR PATENTS
P.O. Box 1450
Alexandria, Virginia 22313-1450
www.uspto.gov

APPLICATION NUMBER	FILING OR 371 (c) DATE	FIRST NAMED APPLICANT	ATTY. DOCKET NO./TITLE
10/793,104	03/03/2004	Bo Cao	SBT-00101.P.2

CONFIRMATION NO. 5596

OC000000019653191

OC000000019653191

24232
DAVID R PRESTON & ASSOCIATES APC
5850 OBERLIN DRIVE
SUITE 300
SAN DIEGO, CA 92121

Date Mailed: 07/18/2006

NOTICE REGARDING CHANGE OF POWER OF ATTORNEY

This is in response to the Power of Attorney filed 10/17/2005.

- The withdrawal as attorney in this application has been accepted. Future correspondence will be mailed to the new address of record. 37 CFR 1.33.

Terri S. Williams

TERRI S WILLIAMS
OP (571) 272-2991

FORMER ATTORNEY/AGENT COPY

UNITED STATES PATENT AND TRADEMARK OFFICE

Commissioner for Patents
United States Patent and Trademark Office
P.O. Box 1450
Alexandria, VA 22313-1450
www.uspto.gov

AUG 18 2005

HEDMAN & COSTIGAN P.C.
1185 AVENUE OF THE AMERICAS
NEW YORK NY 10036

In re Application of Paolo Pozzilli Serial No.: 10/793,111 Filed: March 4, 2004 Attorney Docket No.: 515-4111DIV	: PETITION TO MAKE SPECIAL

This is in response to the petition filed July 26, 2005, to make the above-identified application special under the provisions of 37 CFR 1.102.

37 CFR 1.102 provides rules for making an application "special" and advancing its prosecution out of turn. 37 CFR 1.102(c) indicates applications relating to applicant's age or health, counterterrorism, environmental quality or conservation of energy may be made "special" without payment of a fee. 37 CFR 1.102(d) indicates that petitions to make special for other reasons, such as manufacture, infringement, HIV/AIDS or cancer, recombinant DNA, biotech applications of small companies, etc. (see M.P.E.P. 708.03), which require a fee.

Applicant states only that this application should be made special due to its age – i.e. pendency greater than five years based on the effective filing date of the parent application of which this is a divisional. This reason does not fall within the reasons listed in 37 CFR 1.102(c). Nor does it fall within other reasons listed in M.P.E.P. 708.03.

It is noted that M.P.E.P. 708.01 lists a number of different types of applications which are or may be considered special, such as reexamination proceedings, reissue applications, applications made special by petition, applications potentially interfering with each other, applications in or nearly in condition for allowance or ready for Final rejection, on remand from a tribunal, etc. Among those listed are also applications having a pendency of more than five years based on effective filing date. The guidance given is that examiners should be aware of such applications and give priority consideration to them over other applications. Such does not require a petition to make the application special be submitted by applicant.

The petition is **DISMISSED** as not providing a proper reason for making an application special or fee, where required. Applicant may submit a renewed petition within the guidelines of M.P.E.P. 708.03. Any such renewed petition should be submitted within TWO MONTHS of the mailing date of this decision in order to be timely.

Should there be any questions with regard to this letter please contact William R. Dixon, Jr. by letter addressed to the Director, Technology Center 1600, P.O. Box 1450, Alexandria, VA 22313-1450, or by telephone at 571-272-0519 or by facsimile transmission to the Office general facsimile number, 571-273-8300.

William R. Dixon, Jr.
Special Program Examiner
Technology Center 1600

UNITED STATES PATENT AND TRADEMARK OFFICE

Commissioner for Patents
United States Patent and Trademark Office
P.O. Box 1450
Alexandria, VA 22313-1450
www.uspto.gov

PHILIP S. JOHNSON
JOHNSON & JOHNSON
ONE JOHNSON & JOHNSON PLAZA
NEW BRUNSWICK, NJ 08933-7003

MAILED

AUG 28 2009

OFFICE OF PETITIONS

In re Application of	:	
Wong et al.	:	ON APPLICATION FOR
Application No. 10/793,115	:	PATENT TERM ADJUSTMENT
Filed: March 4, 2004	:	
Atty Docket No. ASP5015USNP	:	

This is in response to the "APPLICATION FOR PATENT TERM ADJUSTMENT" filed July 7, 2009. Applicants request that the determination of patent term adjustment be increased from two hundred fifty-nine (259) days to five hundred forty-three (543) days.

The request is **DISMISSED**.

Applicants are advised that § 1.705(b) provides the avenue before the Office for requesting reconsideration of the patent term adjustment indicated in the notice of allowance. See § 1.702-1.705. Moreover, § 1.705(b) provides that:

> An application for patent term adjustment under this section must be filed no later than the payment of the issue fee but may not be filed earlier than the date of mailing of the notice of allowance. An application for patent term adjustment under this section must be accompanied by:
>
> (1) The fee set forth in § 1.18(e) ...

The instant application for patent term adjustment was filed after the mailing of the notice of allowance and with payment of the issue fee. Thus, the application for patent term adjustment was timely filed. However, neither the fee under 37 CFR § 1.18(e) nor a general authorization to charge any required fees, accompanied the application for patent term adjustment. Accordingly, the request is dismissed for failure to comply with the requirement of paragraph (b)(1) to submit the fee under §1.18(e).

The Office notes applicants request the correction solely on the basis that the Office will take in excess of three years to issue this patent. Knowledge of the actual date the patent issues is required to calculate the amount, if any, of additional patent term patentee is entitled to for

Office failure to issue the patent within 3 years. See 37 CFR 1.702(b). (This is true even where a request for continued examination (RCE) was filed). The computer will not undertake the § 1.702(b) calculation until the actual date of issuance of the patent has been determined. Likewise, the computer will not calculate any further Office delay under § 1.702(a)(4) or applicant delay under § 1.704(c)(10) until the actual date of issuance of the patent has been determined. As such, the Office can not make a determination on the correctness of the patent term adjustment until the patent has issued.

Since the USPTO does not calculate the amount of time earned pursuant to 37 CFR 1.702(b) until the time of the issuance of the patent any request for reconsideration of the patent term adjustment due to an error in the calculation of 37 CFR 1.702(b) is timely if the request for reconsideration is filed within two months of the issuance of the patent. In other words, if applicants wish to challenge the calculation of Office delay under 37 CFR 1.702(b), applicants should file a request for reconsideration of the patent term pursuant to 37 CFR 1.705(d) after issuance of the patent.

The Office of Data Management has been advised of this decision and directed to go forward with processing of this application into a patent.

Telephone inquiries regarding this communication should be directed to Petitions Attorney Steven Brantley at (571) 272-3203.

Nancy Johnson

Nancy Johnson
Senior Petitions Attorney
Office of Petitions

UNITED STATES PATENT AND TRADEMARK OFFICE

UNITED STATES DEPARTMENT OF COMMERCE
United States Patent and Trademark Office
Address: COMMISSIONER FOR PATENTS
P.O. Box 1450
Alexandria, Virginia 22313-1450
www.uspto.gov

PHILIP S. JOHNSON
JOHNSON & JOHNSON
ONE JOHNSON & JOHNSON PLAZA
NEW BRUNSWICK, NJ 08933-7003

Mail Date: 04/20/2010

Applicant	: William Wong	: DECISION ON REQUEST FOR
Patent Number	: 7602284	: RECALCULATION of PATENT
Issue Date	: 10/13/2009	: TERM ADJUSTMENT IN VIEW
Appliction No	: 10/793,115	: OF WYETH AND NOTICE OF INTENT TO
Filed	: 03/04/2004	: ISSUE CERTIFICATE OF CORRECTION
		:

The Request for Recalculation is **GRANTED** to the extent indicated.

The patent term adjustment has been determined to be **542** days. The USPTO will *sua sponte* issue a certificate of correction reflecting the amount of PTA days determined by the recalculation.

Prior to the issuance of the certificate of correction, the USPTO will afford patentee an opportunity to be heard and request reconsideration. Accordingly, patentee has **one month or thirty (30) days**, whichever is longer, to file a request for reconsideration of this patent term adjustment calculation. See 35 U.S.C. 154(b)(3)(B)(ii) and 37 CFR 1.322(a)(4). No extensions of time will be granted under 37 CFR 1.136.

Patentee should use document code PET.OP if electronically filing a request for reconsideration of this patent term adjustment calculation. The patentee must also include the information required by 37 CFR 1.705(b)(2) and the fee required by 37 CFR 1.18(e). If patentee does not file a timely request for reconsideration of this patent term adjustment calculation including the information required by 37 CFR 1.705(b)(2) and the fee required by 37 CFR 1.18(e), the USPTO will issue a certificate of correction reflecting the PTA determination noted above.

Patentee should be aware that in order to preserve the right to review in the United States District Court for the District of Columbia of the USPTO patent term adjustment determination, patentee must ensure that he or she also take the steps required under 35 U.S.C. 154(b)(4)(A) in a timely manner. Nothing in the request for recalculation should be construed as providing an alternative time frame for commencing a civil action under 35 U.S.C. 154(b)(4)(A).

Any questions concerning this decision should be directed to the Office of Patent Legal Administration at 571-272-7702.

UNITED STATES PATENT AND TRADEMARK OFFICE

UNITED STATES DEPARTMENT OF COMMERCE
United States Patent and Trademark Office
Address: COMMISSIONER FOR PATENTS
P.O. Box 1450
Alexandria, Virginia 22313-1450
www.uspto.gov

PHILIP S. JOHNSON
JOHNSON & JOHNSON
ONE JOHNSON & JOHNSON PLAZA
NEW BRUNSWICK, NJ 08933-7003

Mail Date: 05/17/2010

Applicant : William Wong
Patent Number : 7602284
Issue Date : 10/13/2009
Application No : 10/793,115
Filed : 03/04/2004

: NOTICE CONCERNING IMPROPER
: CALCULATION OF PATENT TERM
: ADJUSTMENT BASED UPON USPTO
: IMPROPERLY MEASURING REDUCTION
: PERIOD UNDER 37 CFR 1.704(c)(10).

The United States Patent and Trademark Office (USPTO) discovered that in processing the recent recalculation decisions mailed in response to patentee's filed Request for Recalculation of Patent Term Adjustment in view of Wyeth, the USPTO improperly measured the reduction period for reductions under 37 CFR 1.704(c)(10). Pursuant to 37 CFR 1.704(c)(10), patentee's reduction begins on the date of filing the amendment under 37 CFR 1.312 ("1.312 amendment") or other related paper and ends on the date that the Office mails a response to the filing of the 1.312 amendment or other paper. It has been discovered that during the recalculation, the calculation failed to the limit the reduction to the mail date of the response to the 1.312 amendment or other paper. Accordingly, patentee's reductions were greater than warranted.

This notice **VACATES** the previous GRANTED request for recalculation and provides patentee with a revised GRANTED recalculation.

The patent term adjustment has been determined to be **571** days. The USPTO will *sua sponte* issue a certificate of correction reflecting the amount of patent term adjustment (PTA) days determined by the recalculation.

Prior to the issuance of the certificate of correction, the USPTO will afford patentee an opportunity to be heard and request reconsideration. Accordingly, patentee has **one month or thirty (30) days** from the mail date of this notice, whichever is longer, to file a request for reconsideration of this PTA calculation. See 35 U.S.C. § 154(b)(3)(B)(ii) and 37 CFR 1.322(a)(4).

Patentee should use document code PET.OP if electronically filing a request for reconsideration of this PTA calculation. The patentee must also include the information required by 37 CFR 1.705(b)(2), and the fee required by 37 CFR 1.18(e). If patentee does not file a timely request for reconsideration of this PTA calculation, including the information required by 37 CFR 1.705(b)(2) and the fee required by 37 CFR 1.18(e), the USPTO will issue a certificate of correction reflecting the PTA determination noted above.

Patentee should be aware that in order to preserve the right of review of the USPTO's PTA determination in the United States District Court for the District of Columbia, patentee must ensure that the steps required under 35 U.S.C. § 154 (b)(4) are taken in a timely manner. Nothing in the request for recalculation should be construed as providing an alternative time frame for commencing a civil action under 35 U.S.C. § 154(b)(4).

UNITED STATES PATENT AND TRADEMARK OFFICE

UNITED STATES DEPARTMENT OF COMMERCE
United States Patent and Trademark Office
Address: COMMISSIONER FOR PATENTS
P.O. Box 1450
Alexandria, Virginia 22313-1450
www.uspto.gov

APPL NO.	FILING OR 371 (c) DATE	ART UNIT	FIL FEE REC'D	ATTY.DOCKET NO	DRAWINGS	TOT CLMS	IND CLMS
10/793,144	03/04/2004	2877	964	MIC.016A	8	26	4

CONFIRMATION NO. 6444

CORRECTED FILING RECEIPT

OC000000013435652

20995
KNOBBE MARTENS OLSON & BEAR LLP
2040 MAIN STREET
FOURTEENTH FLOOR
IRVINE, CA 92614

Date Mailed: 08/04/2004

Receipt is acknowledged of this regular Patent Application. It will be considered in its order and you will be notified as to the results of the examination. Be sure to provide the U.S. APPLICATION NUMBER, FILING DATE, NAME OF APPLICANT, and TITLE OF INVENTION when inquiring about this application. Fees transmitted by check or draft are subject to collection. Please verify the accuracy of the data presented on this receipt. **If an error is noted on this Filing Receipt, please write to the Office of Initial Patent Examination's Filing Receipt Corrections, facsimile number 703-746-9195. Please provide a copy of this Filing Receipt with the changes noted thereon. If you received a "Notice to File Missing Parts" for this application, please submit any corrections to this Filing Receipt with your reply to the Notice. When the USPTO processes the reply to the Notice, the USPTO will generate another Filing Receipt incorporating the requested corrections (if appropriate).**

Applicant(s)

John LaBelle, Long Beach, CA;
Steven Szczuka, Chino Hills, CA;
Kenneth W. Baun, Trabuco Canyon, CA;

Domestic Priority data as claimed by applicant

This appln claims benefit of 60/525,621 11/26/2003

Foreign Applications

If Required, Foreign Filing License Granted: 06/10/2004

Projected Publication Date: 05/26/2005

Non-Publication Request: No

Early Publication Request: No

Title

Rangefinder and method for collecting calibration data

Preliminary Class
356

LICENSE FOR FOREIGN FILING UNDER
Title 35, United States Code, Section 184
Title 37, Code of Federal Regulations, 5.11 & 5.15

GRANTED

The applicant has been granted a license under 35 U.S.C. 184, if the phrase "IF REQUIRED, FOREIGN FILING LICENSE GRANTED" followed by a date appears on this form. Such licenses are issued in all applications where the conditions for issuance of a license have been met, regardless of whether or not a license may be required as set forth in 37 CFR 5.15. The scope and limitations of this license are set forth in 37 CFR 5.15(a) unless an earlier license has been issued under 37 CFR 5.15(b). The license is subject to revocation upon written notification. The date indicated is the effective date of the license, unless an earlier license of similar scope has been granted under 37 CFR 5.13 or 5.14.

This license is to be retained by the licensee and may be used at any time on or after the effective date thereof unless it is revoked. This license is automatically transferred to any related applications(s) filed under 37 CFR 1.53(d). This license is not retroactive.

The grant of a license does not in any way lessen the responsibility of a licensee for the security of the subject matter as imposed by any Government contract or the provisions of existing laws relating to espionage and the national security or the export of technical data. Licensees should apprise themselves of current regulations especially with respect to certain countries, of other agencies, particularly the Office of Defense Trade Controls, Department of State (with respect to Arms, Munitions and Implements of War (22 CFR 121-128)); the Office of Export Administration, Department of Commerce (15 CFR 370.10 (j)); the Office of Foreign Assets Control, Department of Treasury (31 CFR Parts 500+) and the Department of Energy.

NOT GRANTED

No license under 35 U.S.C. 184 has been granted at this time, if the phrase "IF REQUIRED, FOREIGN FILING LICENSE GRANTED" DOES NOT appear on this form. Applicant may still petition for a license under 37 CFR 5.12, if a license is desired before the expiration of 6 months from the filing date of the application. If 6 months has lapsed from the filing date of this application and the licensee has not received any indication of a secrecy order under 35 U.S.C. 181, the licensee may foreign file the application pursuant to 37 CFR 5.15(b).

UNITED STATES POSTAL SERVICE

Track & Confirm

Shipment Details

You entered EV32 0129 415U S

Your item was delivered at 9:33 am on March 05, 2004 in ALEXANDRIA, VA 22313 to PATENT OFFICE. The item was signed for by J S.

Here is what happened earlier:

- ARRIVAL AT UNIT, March 05, 2004, 8:22 am, DULLES, VA 20102
- ENROUTE, March 04, 2004, 5:11 pm, SANTA ANA, CA 92799
- ACCEPTANCE, March 04, 2004, 4:52 pm, SANTA ANA, CA 92799

Track & Confirm

Enter label number:

Track & Confirm FAQs Go >

Notification Options

- **Track & Confirm by email** What is this? Go >
- **Request Proof of Delivery** What is this? Go >

POSTAL INSPECTORS
Preserving the Trust

site map contact us government services

Copyright © 1999-2002 USPS. All Rights Reserved. Terms of Use Privacy Policy

UNITED STATES PATENT AND TRADEMARK OFFICE

COMMISSIONER FOR PATENTS
UNITED STATES PATENT AND TRADEMARK OFFICE
P.O. BOX 1450
ALEXANDRIA, VA 22313-1450
www.uspto.gov

COPY MAILED

SEP 2 9 2009

OFFICE OF PETITIONS

WILMERHALE/BOSTON
60 STATE STREET
BOSTON MA 02109

In re Application of	:	ON APPLICATION FOR
Daniel J. Allen	:	PATENT TERM ADJUSTMENT
Application No. 10/793149	:	AND REQUEST FOR
Filing or 371(c) Date: 03/04/2004	:	RECONSIDERATION OF
Attorney Docket No.	:	PATENT TERM ADJUSTMENT
2003160.124US1	:	

This is in response to the APPLICATION FOR PATENT TERM ADJUSTMENT AND REQUEST FOR RECONSIDERATION OF PATENT TERM ADJUSTMENT UNDER 37 CFR §§ 1.702- 1.705, filed July 13, 2009. Applicant submits that the correct patent term adjustment to be indicated on the patent should be a total of 808 days, not zero (0) days as calculated by the Office as of the mailing of the initial determination of patent term adjustment. Applicant requests this correction solely on the basis that the Office will take in excess of three years to issue this patent. The request is properly treated under 37 CFR 1.705(b).

As the instant application for patent term adjustment requests reconsideration of the patent term adjustment as it relates to the Office's failure to issue the patent within 3 years of the filing date, the application for patent term adjustment under 37 CFR 1.705(b) is **DISMISSED as PREMATURE**.

Knowledge of the actual date the patent issues is required to calculate the amount, if any, of additional patent term patentee is entitled to for Office failure to issue the patent within 3 years. See § 1.702(b). (This is true even where a request for continued examination (RCE) was filed). The computer will not undertake the § 1.702(b) calculation until the actual date of issuance of the patent has been determined. Likewise, the computer will not calculate any further Office delay under § 1.702(a)(4) or applicant delay under § 1.704(c)(10) until the actual date of issuance of the patent has been determined. As such, the Office can not make a determination on the correctness of the patent term adjustment until the patent has issued.

Requesting reconsideration of the patent term adjustment to be indicated on the patent under 37 CFR 1.705(b) based on the initial determination of patent term adjustment and a projected issuance date of the patent (or even the filing date of the request for continued examination) is premature. Accordingly, it is appropriate to dismiss as premature such a request.

Rather than file an application for patent term adjustment under 37 CFR 1.705(b) contesting the 37 CFR 1.702(b) calculation at the time of the mailing of the notice of allowance, applicant is

advised that they may wait until the time of the issuance of the patent and file a request for reconsideration of the patent term adjustment pursuant to 37 CFR 1.705(d). As the USPTO does not calculate the amount of time earned pursuant to 37 CFR 1.702(b) until the time of the issuance of the patent, the Office will consider any request for reconsideration of the patent term adjustment due to an error in the calculation of 37 CFR 1.702(b) to be timely if the request for reconsideration is filed within two months of the issuance of the patent. However, as to all other bases for contesting the initial determination of patent term adjustment received with the notice of allowance, applicant must timely file an application for patent term adjustment prior to the payment of the issue fee[1].

The Office acknowledges submission of the $200.00 fee set forth in 37 CFR 1.18(e) for consideration of the application for patent term adjustment under 37 CFR 1.705(b).

Any request for reconsideration of the patent term adjustment indicated on the patent must be timely filed within 2 months after issuance pursuant to 37 CFR 1.705(d) and must include payment of the required fee under 37 CFR 1.18(e).

The Office of Data Management has been advised of this decision. This application is being referred to the Office of Data Management for issuance of the patent.

Telephone inquiries specific to this decision should be directed to Attorney Derek Woods at (571) 272-3232.

Alesia Brown
Senior Petitions Attorney
Office of Petitions
Office of the Deputy Commissioner
for Patent Examination Policy

---

[1] For example, if applicant disputes both the calculation of patent term adjustment under 37 CFR 1.702(a)(1) for Office failure to mail a first Office action or notice of allowance not later than fourteen months after the date on which the application was filed and under 37 CFR 1.702(b) for Office failure to issue a patent within three years of the actual filing date of the application, then applicant must still timely file an application for patent term adjustment prior to the payment of the issue fee to contest the calculation of Office delay in issuing a first Office action or notice of allowance. See 37 CFR 1.705(b) and 35 U.S.C. 154(b)(3)(B). A dispute as to the calculation of the §1.702(a)(1) period raised on request for reconsideration of patent term adjustment under 37 CFR 1.705(d) will be dismissed as untimely filed.

UNITED STATES PATENT AND TRADEMARK OFFICE

UNITED STATES DEPARTMENT OF COMMERCE
United States Patent and Trademark Office
Address: COMMISSIONER FOR PATENTS
P.O. Box 1450
Alexandria, Virginia 22313-1450
www.uspto.gov

WILMERHALE/BOSTON
60 STATE STREET
BOSTON, MA 02109

Mail Date: 04/20/2010

Applicant	: Daniel J. Allen	: DECISION ON REQUEST FOR
Patent Number	: 7613263	: RECALCULATION of PATENT
Issue Date	: 11/03/2009	: TERM ADJUSTMENT IN VIEW
Appliction No	: 10/793,149	: OF WYETH AND NOTICE OF INTENT TO
Filed	: 03/04/2004	: ISSUE CERTIFICATE OF CORRECTION
		:

The Request for Recalculation is **GRANTED** to the extent indicated.

The patent term adjustment has been determined to be **656** days. The USPTO will *sua sponte* issue a certificate of correction reflecting the amount of PTA days determined by the recalculation.

Prior to the issuance of the certificate of correction, the USPTO will afford patentee an opportunity to be heard and request reconsideration. Accordingly, patentee has **one month or thirty (30) days**, whichever is longer, to file a request for reconsideration of this patent term adjustment calculation. See 35 U.S.C. 154(b)(3)(B)(ii) and 37 CFR 1.322(a)(4). No extensions of time will be granted under 37 CFR 1.136.

Patentee should use document code PET.OP if electronically filing a request for reconsideration of this patent term adjustment calculation. The patentee must also include the information required by 37 CFR 1.705(b)(2) and the fee required by 37 CFR 1.18(e). If patentee does not file a timely request for reconsideration of this patent term adjustment calculation including the information required by 37 CFR 1.705(b)(2) and the fee required by 37 CFR 1.18(e), the USPTO will issue a certificate of correction reflecting the PTA determination noted above.

Patentee should be aware that in order to preserve the right to review in the United States District Court for the District of Columbia of the USPTO patent term adjustment determination, patentee must ensure that he or she also take the steps required under 35 U.S.C. 154(b)(4)(A) in a timely manner. Nothing in the request for recalculation should be construed as providing an alternative time frame for commencing a civil action under 35 U.S.C. 154(b)(4)(A).

Any questions concerning this decision should be directed to the Office of Patent Legal Administration at 571-272-7702.

UNITED STATES PATENT AND TRADEMARK OFFICE

Commissioner for Patents
United States Patent and Trademark Office
P.O. Box 1450
Alexandria, VA 22313-1450
www.uspto.gov

LERNER DAVID LITTENBERG
KRUMHOLZ & MENTLIK
600 SOUTH AVENUE WEST
WESTFIELD, NJ 07090

COPY MAILED

SEP 21 2006

OFFICE OF PETITIONS

In re Application of	:	
Brian Barney	:	
Application No. 10/793,150	:	ON PETITION
Filed: March 4, 2004	:	
Attorney Docket No. IVAL-192 (56327-347)	:	

This is a decision on the petition under 37 CFR 1.137(b), filed May 5, 2006, to revive the above-identified application.

The petition is **GRANTED**.

The above-identified application became abandoned for failure to reply in a timely manner to the non-final Office action mailed June 29, 2005, which set a shortened statutory period for reply of three (3) months. No extension of time under the provisions of 37 CFR 1.136(a) were obtained. Accordingly, the above-identified application became abandoned on September 30, 2005.

Telephone inquiries concerning this decision should be directed to Irvin Dingle at (571) 272-3210.

This matter is being referred to Technology Center AU 3743 for further processing.

Irvin Dingle
Petitions Examiner
Office of Petitions

UNITED STATES PATENT AND TRADEMARK OFFICE

UNITED STATES DEPARTMENT OF COMMERCE
United States Patent and Trademark Office
Address: COMMISSIONER FOR PATENTS
P.O. Box 1450
Alexandria, Virginia 22313-1450
www.uspto.gov

APPLICATION NUMBER	FILING OR 371 (c) DATE	FIRST NAMED APPLICANT	ATTY. DOCKET NO./TITLE
10/793,150	03/04/2004	Brian Barney	IVAL-192 (56327-347)

CONFIRMATION NO. 6434

OC000000020505140

OC000000020505140

Mark G. Lappin, P.C.
McDermott, Will & Emery
28 State Street
Boston, MA 02109

Date Mailed: 09/20/2006

NOTICE REGARDING CHANGE OF POWER OF ATTORNEY

This is in response to the Power of Attorney filed 05/05/2006.

- The Power of Attorney to you in this application has been revoked by the assignee who has intervened as provided by 37 CFR 3.71. Future correspondence will be mailed to the new address of record(37 CFR 1.33).

IRVIN DINGLE
OP (571) 272-3210

FORMER ATTORNEY/AGENT COPY

UNITED STATES PATENT AND TRADEMARK OFFICE

UNITED STATES DEPARTMENT OF COMMERCE
United States Patent and Trademark Office
Address: COMMISSIONER FOR PATENTS
P.O. Box 1450
Alexandria, Virginia 22313-1450
www.uspto.gov

APPLICATION NUMBER	FILING OR 371 (c) DATE	FIRST NAMED APPLICANT	ATTY. DOCKET NO./TITLE
10/793,150	03/04/2004	Brian Barney	IVAL-192 (56327-347)

CONFIRMATION NO. 6434

OC000000020505258

OC000000020505258

000530
LERNER, DAVID, LITTENBERG,
KRUMHOLZ & MENTLIK
600 SOUTH AVENUE WEST
WESTFIELD, NJ 07090

Date Mailed: 09/20/2006

NOTICE OF ACCEPTANCE OF POWER OF ATTORNEY

This is in response to the Power of Attorney filed 05/05/2006.

The Power of Attorney in this application is accepted. Correspondence in this application will be mailed to the above address as provided by 37 CFR 1.33.

IRVIN DINGLE
OP (571) 272-3210

ATTORNEY/APPLICANT COPY

UNITED STATES PATENT AND TRADEMARK OFFICE

Commissioner for Patents
United States Patent and Trademark Office
P.O. Box 1450
Alexandria, VA 22313-1450
www.uspto.gov

HOLME ROBERTS & OWEN, LLP
229 SOUTH MAIN, SUITE 1800
SALT LAKE CITY, UT 84111

COPY MAILED

APR 1 0 2008

OFFICE OF PETITIONS

In re Application of	:	
Joseph B. Horn et al	:	
Application No. 10/793,156	:	ON PETITION
Filed: March 4, 2004	:	
Attorney Docket No. 49236-01010	:	

This is a decision on the petition under 37 CFR 1.137(b), filed November 14, 2007, to revive the above-identified application.

The petition is **GRANTED**.

The above-identified application became abandoned for failure to reply in a timely manner to the non-final Office action mailed December 19, 2006, which set a shortened statutory period for reply of three (3) months. No extension of time under the provisions of 37 CFR 1.136(a) were obtained. Accordingly, the above-identified application became abandoned on March 20, 2007.

An extension of time under 37 CFR 1.136 must be filed prior to the expiration of the maximum extendable period for reply. See In re Application of S., 8 USPQ2d 1630, 1631 (Comm'r Pats. 1988). Accordingly, since the $510 extension of time submitted with the petition on November 14, 2007 was subsequent to the maximum extendable period for reply, this fee is unnecessary and will be credit to petitioner's credit card.

Telephone inquiries concerning this decision should be directed to Irvin Dingle at (571) 272-3210.

This matter is being referred to Technology Center AU 2879 for further processing.

Irvin Dingle
Petitions Examiner
Office of Petitions

UNITED STATES PATENT AND TRADEMARK OFFICE

Commissioner for Patents
United States Patent and Trademark Office
P.O. Box 1450
Alexandria, VA 22313-1450
www.uspto.gov

SENNIGER POWERS LEAVITT AND ROEDEL
ONE METROPOLITAN SQUARE
16TH FLOOR
ST. LOUIS, MO 63102

COPY MAILED

NOV 24 2004

OFFICE OF PETITIONS

In re Application of	:	
Thomas E. Yingst	:	
Application No. 10/793,165	:	NOTICE
Filed: March 4, 2004	:	
Attorney Docket No. DKE 9745.2	:	

This is a notice regarding your request for acceptance of a fee deficiency submission under 37 CFR 1.28. On September 1, 1998, the Court of Appeals for the Federal Circuit held that 37 CFR 1.28(c) is the sole provision governing the time for correction of the erroneous payment of the issue fee as a small entity. **See DH Technology v. Synergystex International, Inc. 154 F.3d 1333, 47 USPQ2d 1865 (Fed. Cir. Sept. 1, 1998).**

The Office no longer investigates or rejects original or reissue applications under 37 CFR 1.56. **1098 Off. Gaz. Pat. Office 502 (January 3, 1989)**. Therefore, nothing in this Notice is intended to imply that an investigation was done.

Your fee deficiency submission under 37 CFR 1.28 is hereby **ACCEPTED.**

This application no longer qualifies for small entity status. Accordingly, all future fees must be paid at the large entity rate.

Inquiries related to this communication should be directed to the undersigned Staff at ((571) 272-3218.

This matter is being referred to Technology Center AU 3728.

Frances Hicks
Frances Hicks
Petitions Examiner
Office of Petitions
Office of the Deputy Commissioner
for Patent Examination Policy

UNITED STATES PATENT AND TRADEMARK OFFICE

COMMISSIONER FOR PATENTS
UNITED STATES PATENT AND TRADEMARK OFFICE
P.O. BOX 1450
ALEXANDRIA, VA 22313-1450
www.uspto.gov

COPY MAILED

MAR 2 0 2006

OFFICE OF PETITIONS

KATTEN MUCHIN ROSENMAN LLP
575 MADISON AVENUE
NEW YORK, NY 10022-2585

In re Application of	:
Tanaka, et al.	: DECISION ON PETITION
Application No. 10/793,167	:
Filed: March 4, 2004	:
Dkt. No.: FUJI 21.042 (100794-00575	:

This decision is in response to the petition under 37 CFR 1.181 filed March 4, 2005.

This application was held abandoned July 25, 2004 for failure to timely file a proper response to the Notice to File Missing Parts of Nonprovisional Application (Notice) mailed May 24, 2004. The Notice set a two month shortened statutory period for reply. Notice of Abandonment was mailed February 14, 2005.

Petitioners argue that the Notice mailed May 24, 2004 was not received at the correspondence address of record for the instant application.

In the absence of any irregularity in the mailing of the Office communication, there is a strong presumption that the Office communication was properly mailed to practitioner at the address of record. This presumption may be overcome by a showing that the Office communication was not in fact received. The showing required to establish non-receipt of an Office communication must include a statement from the practitioner stating that the Office communication was not received by the practitioner and attesting to the fact that a search of the file jacket and docket records indicates that the Office communication was not received. A copy of the docket record where the non-received Office communication would have been entered had it been received and docketed must be attached to and referenced in practitioner's statement. *See*, MPEP 711.03(c). The showing outlined above may not be sufficient if there are circumstances that point to a conclusion that the Office communication may have been lost after receipt rather than a conclusion that the Office communication was lost in the mail.

In support of the petition, petitioners have provided a copy of the docket record where the Office communication would have been

entered had it been received along with a statement from practitioner that a search of the docket record and file jacket indicated that the Office communication was not received.

In view thereof, the petition to withdraw the holding of abandonment is hereby **GRANTED**.

The Notice of Abandonment is hereby **VACATED** and the holding of abandonment is **WITHDRAWN**.

This application is being directed to the Office of Initial Patent Examination for re-mailing of the Notice.

Telephone inquiries regarding this decision should be directed to the undersigned at (571) 272-3205.

Alesia M. Brown
Petitions Attorney
Office of Petitions

UNITED STATES PATENT AND TRADEMARK OFFICE

Commissioner for Patents
United States Patent and Trademark Office
P.O. Box 1450
Alexandria, VA 22313-1450
www.uspto.gov

MAILED

JUL 13 2010

OFFICE OF PETITIONS

FISH & RICHARDSON PC
P.O. BOX 1022
MINNEAPOLIS MN 55440-1022

In re Patent No. 7,438,905 : DECISION ON REQUEST FOR
Seiichi Suzuki et al. : RECONSIDERATION OF
Issue Date: October 21, 2008 : PATENT TERM ADJUSTMENT AND
Application No. 10/793,171 : NOTICE OF INTENT TO ISSUE
Filed: March 4, 2004 : CERTIFICATE OF CORRECTION
Attorney Docket No. 14539-015001/JF-100US-C1:

This is a decision on the petition filed on December 19, 2008, which is being treated as a petition under 37 CFR 1.705(d) requesting that the patent term adjustment indicated on the above-identified patent be corrected to indicate that the term of the above-identified patent is extended or adjusted by one thousand, one hundred thirty-five (1135) days.

The petition to correct the patent term adjustment indicated on the above-identified patent is **GRANTED to the extent indicated herein**. The term of the above-identified patent is extended or adjusted by **one thousand, one hundred (1100) days**[1].

37 CFR 1.703(b) indicates that the period of adjustment under 37 CFR 1.702(b) ("over three year period") is the number of days, if any, in the period beginning on the day after the date that is three years after the actual filing date of the application and ending on the date a patent was issued. 35 U.S.C. 154(b)(1)(B). However, 37 CFR 1.703(b) also sets forth the limitations on patent term adjustment specified in 35 U.S.C.

[1] The period of overlap between the "A" delay and the "B" delay is 47 days, not 12 days as patentees calculate. It is noted that "A" delays and "B" delays overlap only if such delays occur on the same calendar day. A review of the record reveals that the period of "A" delay that overlaps the period of "B" delay began January 20, 2008, and ended March 6, 2008. Thus the period of "A" delay that overlaps the period of "B" delay is 47 days, not 12 days.

154(b)(1)(B)(i) and (ii). Specifically, 37 CFR 1.703(b)(4) provides that the period of adjustment of the term of a patent shall not include the period equal to the sum of the period of pendency consumed by appellate review under 35 U.S.C. 134, 141, 145, whether successful or unsuccessful (35 U.S.C. 154(b)(1)(B)(ii)).

The Office will *sua sponte* issue a certificate of correction. Pursuant to 37 CFR 1.322, the Office will not issue a certificate of correction without first providing assignee or patentee an opportunity to be heard. Accordingly, patentee is given **one (1) month or thirty (30) days**, whichever is longer, from the mail date of this decision to respond. No extensions of time will be granted under § 1.136.

Nothing in this decision shall be construed as a waiver of the requirement of 35 U.S.C. 154(b)(4) that any civil action by an applicant dissatisfied with a determination made by the Director under 35 U.S.C. 154(b)(3) be filed in the United States District Court for the District of Columbia within 180 days after the grant of the patent.

The Office acknowledges the submission of the $200.00 fee set forth in 37 CFR 1.18(e). No additional fee is due.

This matter is being referred to the Certificates of Correction Branch for issuance of a certificate of correction. The Office will issue a certificate of correction indicating that the term of the above-identified patent is extended or adjusted by **one thousand, one hundred (1,100) days.**

Telephone inquiries specific to this matter should be directed to the undersigned at (571) 272-3222.

/Kenya A. McLaughlin/

Kenya A. McLaughlin
Petitions Attorney
Office of Petitions

Enclosure: Copy of DRAFT Certificate of Correction

DRAFT COPY

UNITED STATES PATENT AND TRADEMARK OFFICE

CERTIFICATE OF CORRECTION

PATENT : 7,438,905 B2

DATED : Oct. 21, 2008

INVENTOR(S) : Suzuki et al.

It is certified that error appears in the above-identified patent and that said Letters Patent is hereby corrected as shown below:

On the cover page,

[*] Notice: Subject to any disclaimer, the term of this patent is extended or adjusted under 35 USC 154(b) by (597) days

Delete the phrase "by 597 days" and insert – by 1100 days--

UNITED STATES PATENT AND TRADEMARK OFFICE

COMMISSIONER FOR PATENTS
UNITED STATES PATENT AND TRADEMARK OFFICE
P.O. BOX 1450
ALEXANDRIA, VA 22313-1450
www.uspto.gov

HOLLINGSWORTH & FUNK, LLC
SUITE 125
8009 34TH AVENUE SOUTH
MINNEAPOLIS, MN 55425

COPY MAILED

AUG 13 2008

In re Application of :
Pekko, Orava, et al. :
Application No. 10/793,191 : ON PETITION
Filed: March 4, 2004 :
Attorney Docket No. KOLS.090PA :

This is a decision in response to the Petition Under 37 CFR 1.181 to Withdraw Holding of Abandonment, filed April 7, 2008.

The petition is **GRANTED**.

This application was held abandoned for failure to timely respond to the Office action of August 20, 2007, which set a three (3) month shortened statutory period for reply. Accordingly, a reply was due on or before November 20, 2007; however, the maximum statutory period for response ended on February 20, 2008, with a proper petition for extension of time.

Petitioner states that a timely reply was filed. To support this assertion, petitioner submitted a copy of a return postcard which acknowledges receipt by the U.S. Patent and Trademark Office (USPTO) on February 25, 2008 of, *inter alia,* Office Action Amendment and Response (11 pages) and Petition for Extension of Time. A copy of the previously submitted reply, bearing a certificate of mailing dated February 18, 2008, accompanies the petition.

A review of the written record confirms that an amendment, including an appropriate 3-month extension of time, was filed on February 25, 2008, using a Certificate of Mailing under 37 CFR 1.8 dated February 18, 2008, as it is present in the file. Accordingly, the amendment was timely received in the USPTO and no abandonment existed.

The holding of abandonment for failure to timely file a response to the Office action of August 20, 2007 is withdrawn and the application is restored to pending status. The Notice of Abandonment mailed March 10, 2008 is hereby vacated.

This application is being referred to Technology Center AU 2617 for appropriate action by the Examiner in the normal course of business on the reply received February 25, 2008.

Telephone inquiries concerning this decision should be directed to the undersigned at (571) 272-3204. Inquiries relating to further prosecution should be directed to the Technology Center.

Sherry D. Brinkley
Petitions Examiner
Office of Petitions

UNITED STATES PATENT AND TRADEMARK OFFICE

COMMISSIONER FOR PATENTS
UNITED STATES PATENT AND TRADEMARK OFFICE
P.O. BOX 1450
ALEXANDRIA, VA 22313-1450
www.uspto.gov

GREG J. OWOC , TORQ-TUF CORP
106 GALPHIN DRIVE
GREENVILLE SC 29609

COPY MAILED

JUN 0 9 2008

In re Application of :
Arnold, et al. :
Application No. 10/793,203 : DECISION ON PETITION
Filed: March 4, 2004 :
Attorney Docket No. **TTC10-PP** :

This is a decision on the petition under the unintentional provisions of 37 CFR 1.137(b), filed March 26, 2008, to revive the above-identified application.

The petition is **DISMISSED WITHOUT PREJUDICE**.

In accordance with 37 CFR 1.33(b), "[a]mendments and other papers papers, except for written assertions pursuant to § 1.27(c)(2)(ii) of this part, filed in the application must be signed by: (1) A registered patent attorney or patent agent of record appointed in compliance with § 1.32(b); (2) A registered patent attorney or patent agent not of record who acts in a representative capacity under the provisions of § 1.34; (3) An assignee as provided for under §3.71(b) of this chapter; or (4) All of the applicants (§ 1.41(b)) for patent, unless there is an assignee of the entire interest and such assignee has taken action in the application in accordance with § 3.71 of this chapter.

An unsigned amendment (or other paper) or one not properly signed by a person having authority to prosecute the application is not entered. This applies, for instance, where the amendment (or other paper) is signed by only one of two applicants and the one signing has not been given a power of attorney by the other applicants.

Therefore, as the petition is not signed by all the inventors and the record herein fails to disclose that petitioner herein was ever given a power of attorney to act on behalf of the remaining joint inventors, or that he is an assignee of the entire interest and has complied with the provisions of 37 CFR 3.73(b), the petition has not been considered on the merits.

Any request for reconsideration must be properly executed in accordance with 37 CFR 1.33.

Further correspondence with respect to this matter should be addressed as follows:

By Mail: Mail Stop PETITION
Commissioner for Patents
P. O. Box 1450

Alexandria, VA 22313-1450

By hand: U. S. Patent and Trademark Office
Customer Service Window, Mail Stop Petitions
Randolph Building
401 Dulany Street
Alexandria, VA 22314

The centralized facsimile number is **(571) 273-8300.**

Alesia M. Brown
Petitions Attorney
Office of Petitions

UNITED STATES PATENT AND TRADEMARK OFFICE

COMMISSIONER FOR PATENTS
UNITED STATES PATENT AND TRADEMARK OFFICE
P.O. BOX 1450
ALEXANDRIA, VA 22313-1450
www.uspto.gov

GREG J. OWOC , TORQ-TUF CORP
106 GALPHIN DRIVE
GREENVILLE SC 29609

COPY MAILED
AUG 04 2008
OFFICE OF PETITIONS

In re Application of
Arnold, et al.
Application No. 10/793,203
Filed: March 4, 2004
Attorney Docket No. TTC10-PP

DECISION ON PETITION

This is a decision on the renewed petition under the unintentional provisions of 37 CFR 1.137(b), filed June 23, 2008, to revive the above-identified application.

The petition is **GRANTED**.

This application became abandoned August 23, 2007 for failure to timely pay the issue and publication fees, as required by the Notice of Allowance and Fee(s) Due, mailed May 22, 2007. Notice of Abandonment was mailed September 26, 2007.

The petition satisfies the requirements of 37 CFR 1.137(b) in that petitioner has supplied (1) the reply in the form of payment of the issue fee and the publication fee, (2) the required petition fee and (3) a proper statement of unintentional delay.

The file does not indicate a change of address has been submitted, although the address given on the petition differs from the address of record. If appropriate, a change of address should be filed in accordance with MPEP 601.03. A courtesy copy of this decision is being mailed to the address given on the petition; however, the Office will mail all future correspondence solely to the address of record.

Telephone inquiries concerning this decision should be directed to the undersigned at (571) 272-3205.

This application is being referred to the Office of Data Management for processing into a patent.

Alesia M. Brown
Petitions Attorney
Office of Petitions

CC: Robert Reed
204 Bouchillion Dr
Greenville, SC 29615

UNITED STATES PATENT AND TRADEMARK OFFICE

Commissioner for Patents
United States Patent and Trademark Office
P.O. Box 1450
Alexandria, VA 22313-1450
www.uspto.gov

CAHN & SAMUELS
2000 P STREET NW
SUITE 200
WASHINGTON, DC 20036

COPY MAILED

MAY 1 2 2006

OFFICE OF PETITIONS

In re Application of	:	
Harry B. Smith	:	
Application No. 10/793,251	:	DECISION ON PETITION
Filed: March 5, 2004	:	TO MAKE SPECIAL UNDER
Attorney Docket No. 802.0003DIV	:	37 CFR 1.102(c)(1)
	:	

This is a decision on the petition under 37 CFR 1.102(c)(1), filed April 6, 2006, to make the above-identified application special based on applicant's age as set forth in M.P.E.P. § 708.02, Section IV.

The petition is **GRANTED**.

A grantable petition to make an application special under 37 CFR 1.102(c)(1) and MPEP § 708.02, Section IV: Applicant's Age must be accompanied by evidence showing that at least one of the applicants is 65 years of age, or more, such as a birth certificate or a statement by applicant. No fee is required.

The petition includes a statement by Harry B. Smith attesting that he is over 65 years of age. Accordingly, the above-identified application has been accorded "special" status.

Telephone inquiries concerning this decision should be directed to Wan Laymon at 571-272-3220.

All other inquiries concerning either the examination or status of the application should be directed to the Technology Center.

This application is being referred to Technology Center AU 2611 for action on the merits commensurate with this decision.

Wan Laymon

Wan Laymon
Petitions Examiner
Office of Petitions

UNITED STATES PATENT AND TRADEMARK OFFICE

Commissioner for Patents
United States Patent and Trademark Office
P.O. Box 1450
Alexandria, VA 22313-1450
www.uspto.gov

MAR 16 2005

Jerry H. Noh
Suite 2741
3435 Wilshire Blvd
Los Angeles CA 90010

In re Application of	:	
Moon Hyo Kim	:	DECISION PETITION
Serial No.: 10/793,259	:	
Filed: March 4, 2004	:	
For: Multi-Section Exercise and Massage	:	
Track	:	

This is in response to applicants' petition filed March 4, 2004, to make the above-identified application special under the provisions of 37 CFR 1.102(c), based on the age of the applicant.

Applicant has satisfied the provisions set forth in M.P.E.P. 708.02, IV. Therefore the petition is **GRANTED**.

The application will be forwarded to the examiner for action on the merits commensurate with this decision.

Should there be any questions with regard to this letter please contact Richard Bertsch by letter addressed to the Director, Technology Center 3700, P.O. Box 1450 Alexandria, VA 22313-1450, or by telephone at (571) 272-2975 or by facsimile transmission at (703)273-0275.

Richard A. Bertsch

Richard A. Bertsch, Director
Technology Center 3700

UNITED STATES PATENT AND TRADEMARK OFFICE

Commissioner for Patents
United States Patent and Trademark Office
P.O. Box 1450
Alexandria, VA 22313-1450
www.uspto.gov

MACCORD MASON PLLC
300 N. GREENE STREET, SUITE 1600
P. O. BOX 2974
GREENSBORO, NC 27402

COPY MAILED
MAY 11 2006
OFFICE OF PETITIONS

In re Application of	:	
Beretich et al.	:	DECISION ON PETITION
Application No. 10/793,301	:	TO WITHDRAW
Filed: March 4, 2004	:	FROM RECORD
Attorney Docket No. 7401-011	:	

This is a decision on the Request to Withdraw as attorney or agent of record under 37 C.F.R. § 1.36(b), filed October 17, 2005.

The request is **NOT APPROVED** as moot.

A review of the file record indicates that the power of attorney to Howard A. MacCord, Jr. and all attorneys of record has been revoked by the assignee of the entire interest of the patent application. Accordingly, the request to withdraw under 37 C.F.R. § 1.136(b) is moot.

All future communications from the Office will continue to be directed to the first below-listed address until otherwise notified by applicant.

Telephone inquires concerning this decision should be directed to Petitions Examiner Liana Chase at 571-272- 3206.

David Bucci
Petitions Examiner
Office of Petitions

cc:

JINAN GLASGOW
SPORE, INC
P. O. BOX 28539
RALEIGH, NC 27611-8539

NEOPATENTS, INC.
510 GLENWOOD AVENUE, SUITE 321
RALEIGH, NC 27611-8539

UNITED STATES PATENT AND TRADEMARK OFFICE

Commissioner for Patents
United States Patent and Trademark Office
P.O. Box 1450
Alexandria, VA 22313-1450
www.uspto.gov

MORRISON & FOERSTER, LLP
555 WEST FIFTH STREET
SUITE 3500
LOS ANGELES CA 90013-1024

COPY MAILED

SEP 1 6 2004

OFFICE OF PETITIONS

In re Application of
Okamura
Application No. 10/793,313
Filed: March 3, 2004
Attorney Docket No. 393032016211
For: PACKET-HANDLER OF AUDIO DATA BY ISOCHRONOUS

DECISION GRANTING PETITION

This is a decision on the petition, filed August 16, 2004 (certificate of mailing date August 12, 2004), requesting, in effect, withdrawal of the Notice of Omitted Item(s) in a Nonprovisional Application (Notice), mailed July 21, 2004.

The application was filed on March 3, 2004. On July 21, 2004, the Office of Initial Patent Examination mailed a Notice informing petitioner that page 3 of the specification appeared to have been omitted.

In response to the Notice, petitioner timely filed the present petition. Petitioner requests that page 3 be accorded a filing date of March 3, 2004 on the basis that the entire specification, including allegedly missing page 3, was received in the Patent and Trademark Office (PTO) on March 3, 2004. In support, the petition is accompanied by a copy of applicant's itemized postcard receipt showing an Office of Initial Patent Examination barcode citing March 3, 2004 as the date of receipt. The postcard lists, *inter alia*, that the filing included 106 pages of original application including Abstract. A review of the application file reveals that there are 105 pages present. Page 3 is missing.

The return postcard constitutes *prima facie* evidence that 106 pages of original application, including page 3, was filed on March 3, 2004. MPEP 503. Accordingly, the petition is **GRANTED**. Pursuant to petitioner's authorization, the $130.00 fee submitted with the instant petition will be credited to deposit account, no.03-1952.

The application is being returned to Office of Initial Patent Examination for further processing, with a filing date of March 3, 2004, using the copy of page 3 supplied with the petition.

Any inquiries pertaining to this matter may be directed to the undersigned at (703) 308-6712.

E. Shirene Willis

E. Shirene Willis
Senior Petitions Attorney
Office of Petitions

UNITED STATES PATENT AND TRADEMARK OFFICE

Commissioner for Patents
United States Patent and Trademark Office
P.O. Box 1450
Alexandria, VA 22313-1450
www.uspto.gov

Kilpatrick Stockton LLP,
1001 West Fourth Street
Winston-Salem, NC 27101

COPY MAILED

SEP 22 2008

OFFICE OF PETITIONS

In re Application of	
Hetherington et al.	
Application No. 10/793,322	DECISION ON PETITION
Filed: March 4, 2004	TO WITHDRAW
Attorney Docket No. 49942-284099	FROM RECORD

This is a decision on the Request to Withdraw as attorney or agent of record under 37 C.F.R. § 1.36(b), filed September 2, 2005.

The request is **MOOT**.

A review of the file record indicates that the power of attorney to KILPATRICK STOCKTON LLP, has been revoked by the assignee of the patent application on September 14, 2005. Accordingly, the request to withdraw under 37 C.F.R. § 1.36(b) is moot.

All future communications from the Office will continue to be directed to the correspondence address of record until otherwise notified by applicant.

Telephone inquires concerning this decision should be directed to the undersigned at 571-272-4914.

Ramesh Krishnamurthy

Ramesh Krishnamurthy
Petitions Examiner
Office of Petitions

UNITED STATES PATENT AND TRADEMARK OFFICE

Commissioner for Patents
United States Patent and Trademark Office
P.O. Box 1450
Alexandria, VA 22313-1450
www.uspto.gov

NELSON MULLINS RILEY & SCARBOROUGH LLP
IP DEPARTMENT
100 NORTH TRYON STREET
42ND FLOOR
CHARLOTTE, NC 28202-4000

COPY MAILED

DEC 0 3 2009

OFFICE OF PETITIONS

In re Application of	:	
Hetherington et al.	:	DECISION ON PETITION
Application No. 10,793,322	:	TO WITHDRAW
Filed: March 4, 2004	:	FROM RECORD
Attorney Docket No. 41832/5350	:	

This is a decision on the Request to Withdraw as attorney or agent of record under 37 C.F.R. § 1.36(b), filed September 9, 2009.

The request is **DISMISSED** as involving a moot issue.

A review of the file record indicates that the previous power of attorney was revoked by the assignee on August 26, 2009. Accordingly, the request to withdraw under 37 C.F.R. § 1.36(b) is moot.

All future communications from the Office will be directed to the below-listed address until otherwise properly notified.

Telephone inquires concerning this decision should be directed to the undersigned at 571-272-3206. All other inquires concerning either the examination or status of the application should be directed to the Technology Center.

Liana Walsh
Petitions Examiner
Office of Petitions

cc: JELD-WEN, INC. - STOEL RIVES LLP
900 SW FIFTH AVENUE
SUITE 2600
PORTLAND OR 97204-1268

UNITED STATES PATENT AND TRADEMARK OFFICE

UNITED STATES DEPARTMENT OF COMMERCE
United States Patent and Trademark Office
Address: COMMISSIONER FOR PATENTS
P.O. Box 1450
Alexandria, Virginia 22313-1450
www.uspto.gov

JELD-WEN, Inc. - Stoel Rives LLP
900 SW Fifth Avenue
Suite 2600
Portland, OR 97204-1268

Mail Date: 04/21/2010

Applicant	: Richard W. Hetherington	: DECISION ON REQUEST FOR
Patent Number	: 7614188	: RECALCULATION of PATENT
Issue Date	: 11/10/2009	: TERM ADJUSTMENT IN VIEW
Appliction No	: 10/793,322	: OF WYETH AND NOTICE OF INTENT TO
Filed	: 03/04/2004	: ISSUE CERTIFICATE OF CORRECTION
		:

The Request for Recalculation is **GRANTED** to the extent indicated.

The patent term adjustment has been determined to be **1088** days. The USPTO will *sua sponte* issue a certificate of correction reflecting the amount of PTA days determined by the recalculation.

Prior to the issuance of the certificate of correction, the USPTO will afford patentee an opportunity to be heard and request reconsideration. Accordingly, patentee has **one month or thirty (30) days**, whichever is longer, to file a request for reconsideration of this patent term adjustment calculation. See 35 U.S.C. 154(b)(3)(B)(ii) and 37 CFR 1.322(a)(4). No extensions of time will be granted under 37 CFR 1.136.

Patentee should use document code PET.OP if electronically filing a request for reconsideration of this patent term adjustment calculation. The patentee must also include the information required by 37 CFR 1.705(b)(2) and the fee required by 37 CFR 1.18(e). If patentee does not file a timely request for reconsideration of this patent term adjustment calculation including the information required by 37 CFR 1.705(b)(2) and the fee required by 37 CFR 1.18(e), the USPTO will issue a certificate of correction reflecting the PTA determination noted above.

Patentee should be aware that in order to preserve the right to review in the United States District Court for the District of Columbia of the USPTO patent term adjustment determination, patentee must ensure that he or she also take the steps required under 35 U.S.C. 154(b)(4)(A) in a timely manner. Nothing in the request for recalculation should be construed as providing an alternative time frame for commencing a civil action under 35 U.S.C. 154(b)(4)(A).

Any questions concerning this decision should be directed to the Office of Patent Legal Administration at 571-272-7702.

UNITED STATES PATENT AND TRADEMARK OFFICE

Commissioner for Patents
United States Patent and Trademark Office
P.O. Box 1450
Alexandria, VA 22313-1450
www.uspto.gov

Griffin & Szipl, PC
Suite PH-1
2300 Ninth Street, South
Arlington, VA 22204

COPY MAILED

SEP 10 2008

In re Application of	:	
Hogler Klapproth	:	
Application No. 10/793,323	:	DECISION ON PETITION
Filed: March 5, 2004	:	TO WITHDRAW
Attorney Docket No. STURK0012	:	FROM RECORD
	:	

This is a decision on the Request to Withdraw as attorney or agent of record under 37 C.F.R. § 1.36(b), filed June 17, 2008.

The request is **NOT APPROVED** because it is moot.

A review of the file record indicates that the power of attorney to Griffin & Szipl, PC has been revoked by the assignee of the patent application on July 21, 2008. Accordingly, the request to withdraw under 37 C.F.R. § 1.36(b) is moot.

All future communications from the Office will continue to be directed to the below-listed address until otherwise notified by applicant.

Telephone inquires concerning this decision should be directed to Terri Williams at 571-272-2991.

Terri Williams
Petitions Examiner
Office of Petitions

cc: **Biotech Beach Law Group, PC**
625 Broasway
Suite 1210
San Diego, CA 92101

UNITED STATES PATENT AND TRADEMARK OFFICE

Commissioner for Patents
United States Patent and Trademark Office
P.O. Box 1450
Alexandria, VA 22313-1450
www.uspto.gov

Arent Fox LLP
55 West Fifth Street
48th Floor
Los Angeles, CA 90013

COPY MAILED

MAR 30 2009

OFFICE OF PETITIONS

In re Application of	:	
Martin D. Hustead, et al.	:	
Application No. 10/793,325	:	DECISION ON PETITION
Filed: March 4, 2004	:	TO WITHDRAW
Attorney Docket No. ZR109-09001	:	FROM RECORD
	:	

This is a decision on the Request to Withdraw as attorney or agent of record under 37 C.F.R. § 1.36(b), filed January 23, 2009.

The request is **NOT APPROVED** because it is moot.

A review of the file record indicates that the power of attorney to Arent Fox LLP has been revoked by the assignee of the patent application on March 6, 2009. Accordingly, the request to withdraw under 37 C.F.R. § 1.36(b) is moot.

All future communications from the Office will continue to be directed to the below-listed address until otherwise notified by applicant.

Telephone inquires concerning this decision should be directed to Terri Williams at 571-272-2991.

Terri Williams

Terri Williams
Petitions Examiner
Office of Petitions

cc: **Middleton & Reutlinger**
2500 Brown & Williamson Tower
Louisville, KY 40202

UNITED STATES PATENT AND TRADEMARK OFFICE

Commissioner for Patents
United States Patent and Trademark Office
P.O. Box 1450
Alexandria, VA 22313-1450
www.uspto.gov

Knobbe Martens Olson & Bear LLP
2040 Main Street
Fourteenth Floor
Irvine, CA 92614

COPY MAILED

NOV 16 2004

OFFICE OF PETITIONS

In re Application of	:	
Phan et al.	:	DECISION ACCORDING STATUS
Application No. 10/793,335	:	UNDER 37 CFR 1.47(a)
Filed: March 4, 2004	:	
Attorney Docket No. NAGACO.212A	:	

This is in response to the petition under 37 CFR 1.47(a), filed October 25, 2004 (certificate of mailing October 22, 2004). Petitioner obtained a three-month extension of time to reply. Therefore, the petition is filed timely.

The petition is granted.

Petitioner has shown that Shih-li Lo, the non-signing inventor, has refused to join in the filing of the above-identified application after having been presented with the application papers. Specifically, the statement of facts of Russell Jeide establishes that the inventor was mailed the application papers, including the specification, claims and drawings, but failed to respond to the request that he sign the declaration.

The above-identified application and papers have been reviewed and found in compliance with 37 CFR 1.47(a). This application is hereby accorded Rule 1.47(a) status. As provided in Rule 1.47(c), this Office will forward notice of this application's filing to the non-signing inventor at the address given in the present petition. Notice of the filing of this application will also be published in the Official Gazette.

The application is being referred to Technology Center Art Unit 1653 for examination in due course.

Telephone inquiries regarding this decision should be directed to the undersigned at (571) 272-3211.

Christina Tartera Donnell

Christina Tartera Donnell
Senior Petitions Attorney
Office of Petitions

UNITED STATES PATENT AND TRADEMARK OFFICE

UNITED STATES DEPARTMENT OF COMMERCE
United States Patent and Trademark Office
Address: COMMISSIONER FOR PATENTS
P.O. Box 1450
Alexandria, Virginia 22313-1450
www.uspto.gov

IBM CORPORATION
ROCHESTER IP LAW DEPT. 917
3605 HIGHWAY 52 NORTH
ROCHESTER, MN 55901-7829

Mail Date: 04/20/2010

Applicant	: Lynn Keat Chung	: DECISION ON REQUEST FOR
Patent Number	: 7584476	: RECALCULATION of PATENT
Issue Date	: 09/01/2009	: TERM ADJUSTMENT IN VIEW
Appliction No	: 10/793,346	: OF WYETH AND NOTICE OF INTENT TO
Filed	: 03/04/2004	: ISSUE CERTIFICATE OF CORRECTION
		:

The Request for Recalculation is **GRANTED** to the extent indicated.

The patent term adjustment has been determined to be **1581** days. The USPTO will *sua sponte* issue a certificate of correction reflecting the amount of PTA days determined by the recalculation.

Prior to the issuance of the certificate of correction, the USPTO will afford patentee an opportunity to be heard and request reconsideration. Accordingly, patentee has **one month or thirty (30) days**, whichever is longer, to file a request for reconsideration of this patent term adjustment calculation. See 35 U.S.C. 154(b)(3)(B)(ii) and 37 CFR 1.322(a)(4). No extensions of time will be granted under 37 CFR 1.136.

Patentee should use document code PET.OP if electronically filing a request for reconsideration of this patent term adjustment calculation. The patentee must also include the information required by 37 CFR 1.705(b)(2) and the fee required by 37 CFR 1.18(e). If patentee does not file a timely request for reconsideration of this patent term adjustment calculation including the information required by 37 CFR 1.705(b)(2) and the fee required by 37 CFR 1.18(e), the USPTO will issue a certificate of correction reflecting the PTA determination noted above.

Patentee should be aware that in order to preserve the right to review in the United States District Court for the District of Columbia of the USPTO patent term adjustment determination, patentee must ensure that he or she also take the steps required under 35 U.S.C. 154(b)(4)(A) in a timely manner. Nothing in the request for recalculation should be construed as providing an alternative time frame for commencing a civil action under 35 U.S.C. 154(b)(4)(A).

Any questions concerning this decision should be directed to the Office of Patent Legal Administration at 571-272-7702.

UNITED STATES PATENT AND TRADEMARK OFFICE

Commissioner for Patents
United States Patent and Trademark Office
P.O. Box 1450
Alexandria, VA 22313-1450
www.uspto.gov

Sonali Banerjee
624 Vale Drive
Morganville, NJ 07751

COPY MAILED

AUG 1 4 2008

OFFICE OF PETITIONS

In re Application of	
Achyut Dutta	
Application No. 10/793,362	DECISION ON PETITION
Filed: March 4, 2004	TO WITHDRAW
Attorney Docket No. BPIL-04-002	FROM RECORD

This is a decision on the Request to Withdraw as attorney or agent of record under 37 C.F.R. § 1.36(b), filed March 20, 2008.

The request is **NOT APPROVED**.

A grantable request to withdraw as attorney/agent of record must be signed by every attorney/agent seeking to withdraw or contain a clear indication that one attorney is signing on behalf of another/others. A request to withdraw will not be approved unless at least 30 (thirty) days would remain between the date of approval and the later of the expiration date of a time to file a response or the expiration date of the maximum time period which can be extended under 37 C.F.R. § 1.136(a).

The Office cannot approve the request at this time since the reasons provided do not meet any of the conditions under the mandatory or permissive categories enumerated in 37 CFR 10.40. Section 10.40 of Title 37 of the Code of Federal Regulation states, "[a] practitioner shall not withdraw from employment in a proceeding before the Office without permission from the Office[.]" More specifically, 37 CFR 10.40 states, "[i]f paragraph (b) of this section is not applicable, a practitioner may not request permission to withdraw in matter pending before the Office unless such request or such withdrawal is" for one the permissive reasons listed in 37 CFR 10.40(c). The reasons set forth in the request, ***I do not wish to represent the Inventor in the application for personal reasons***, do not meet any the conditions set forth in 37 CFR 10.40.

All future communications from the Office will continue to be directed to the above-listed address until otherwise notified by applicant.

Telephone inquiries concerning this decision should be directed to Terri Williams at 571-272- 2991.

T. Williams

Terri Williams
Petitions Examiner
Office of Petitions

cc: **Achyut K. Dutta**
Banpil Photonics, Inc.
29253 Bunker Hill Lane
Suite 400
Santa Clara, CA 09054-1131

UNITED STATES PATENT AND TRADEMARK OFFICE

Commissioner for Patents
United States Patent and Trademark Office
P.O. Box 1450
Alexandria, VA 22313-1450
www.uspto.gov

THOMAS R. FITZGERALD
HISCOCK & BARCLAY LLP
100 CHESTNUT STREET, SUITE 2000
ROCHESTER, NY 14604

COPY MAILED

JAN 30 2007

OFFICE OF PETITIONS

In re Patent No. 7,045,932	:	
Issue Date: May 16, 2006	:	
Application No. 10/793,365	:	ON PETITION
Filed: March 4, 2004	:	
Attorney Docket No. 3016150 (20018.000311)	:	

This is a decision on the petition filed May 30, 2006, which is being treated as a request under 37 CFR 3.81(b)[1] to include the name of the assignee on the front page of the above-identified patent by way of a Certificate of Correction.

The request is **GRANTED**.

The patent file is being referred to the Certificates of Correction Branch for issuance of the requested Certificate of Correction.

Telephone inquiries concerning this decision may be directed to the undersigned at (571) 272-3218. Inquiries regarding the issuance of a certificate of correction should be directed to the Certificate of Correction Branch at (571) 272-4200.

Frances Hicks
Petitions Examiner
Office of Petitions

[1] *See* MPEP 1309, subsection II; and Official Gazette of June 22, 2004.

UNITED STATES PATENT AND TRADEMARK OFFICE

COMMISSIONER FOR PATENTS
UNITED STATES PATENT AND TRADEMARK OFFICE
P.O. BOX 1450
ALEXANDRIA, VA 22313-1450
www.uspto.gov

MCHALE & SLAVIN, P.A.
2855 PGA BLVD
PALM BEACH GARDENS, FL 33410

COPY MAILED

NOV 16 2005

OFFICE OF PETITIONS

In re Application of
Robert L. Diaz et al
Application No. 10/793,433
Filed: March 3, 2004
Attorney Docket No. 2682U.002

DECISION ON PETITION
TO MAKE SPECIAL UNDER
37 CFR 1.102(c)(1)

This is a decision on the petition under 37 CFR 1.102(c)(1), filed October 19, 2005, to make the above-identified application special based on applicant's age as set forth in M.P.E.P. § 708.02, Section IV.

The petition is **DISMISSED** due to the face that applicant Robert L. Diaz is only 64 years of age.

A grantable petition to make an application special under 37 CFR 1.102(c)(1) and MPEP § 708.02, Section IV: Applicant's Age, must be accompanied by evidence showing that at least one of the applicants is 65 years of age, or more, such as a birth certificate or a statement by applicant. No fee is required.

Further correspondence with respect to this matter should be addressed as follows:

By Mail: Mail Stop PETITION
Commissioner for Patents
P. O. Box 1450
Alexandria, VA 22313-1450

By hand: U. S. Patent and Trademark Office
Customer Service Window, Mail Stop Petitions
Randolph Building
401 Dulany Street
Alexandria, VA 22314

By FAX: (571) 273-8300

Telephone inquiries concerning this decision should be directed to Wan Laymon at 571-272-3220.

All other inquiries concerning either the examination or status of the application should be directed to the Technology Center.

This matter is being referred to Technology Center Art Unit 3733 for action in its regular turn.

Denise Pothier
Petitions Examiner
Office of Petitions

UNITED STATES PATENT AND TRADEMARK OFFICE

COMMISSIONER FOR PATENTS
UNITED STATES PATENT AND TRADEMARK OFFICE
P.O. BOX 1450
ALEXANDRIA, VA 22313-1450
www.uspto.gov

JUL 21 2004

MAILED

JUL 21 2004

OFFICE OF THE DIRECTOR
TC 3600

QUIRK & TRATOS
3773 Howard Hughes Parkway
Suite 500 North
Las Vegas, NV 89109

In re application of
Robert Nymann
Application No. 10/793,443
Filed: March 04, 2004
For: TRANSMISSION JACK AND APPARATUS FOR RAISING AND LOWERING HEAVY OBJECTS

DECISION ON PETITION TO MAKE SPECIAL (APPLICANT'S AGE)

This is a decision on the petition submitted on June 14, 2004 under 37 CFR 1.102 (c) to make the above-identified application special under the accelerated examination procedure set forth in MPEP 708.02, Section IV: Applicant's Age.

The petition is **GRANTED**.

An application may be accorded special status upon the filing of a petition providing evidence showing that the applicant is at least 65 years old. Such a showing may be provided by evidence such as a birth certificate or a statement from the applicant.

The evidence submitted with the petition is a copy of a birth certificate for Mr. Nymann indicating that he is at least 65 years of age.

The examiner is directed (1) to make an interference search for possible interfering applications, (2) to promptly examine this application out of turn, and (3) if any interfering application is discovered, to examine such application simultaneously and state in the first official letter of such application that it is being taken out of turn because of a possible interference.

Petitioner is advised that this application will continue to be special, throughout its entire prosecution and pendency, including interference or appeal, if any, only if petitioner makes a prompt ***bona fide*** effort, in response to each Office action, to place the application in condition for allowance, even if it is necessary to conduct an interview with the examiner to accomplish this purpose.

SUMMARY: Petition to Make Special **GRANTED**.

Randolph A. Reese

Randolph A. Reese
Special Programs Examiner
Technology Center 3600
(703) 308-2121

RAR/pav: 7/17/04

UNITED STATES PATENT AND TRADEMARK OFFICE

Commissioner for Patents
United States Patent and Trademark Office
P.O. Box 1450
Alexandria, VA 22313-1450
www.uspto.g

KARL M. STEINS
STEINS & ASSOCIATES
2333 CAMINO DEL RIO SOUTH
SUITE 120
SAN DIEGO, CA 92108

COPY MAILED

AUG 0 6 2008

OFFICE OF PETITIONS

In re Application of	:	
Howard Boyd	:	
Application No. 10/793,444	:	DECISION ON PETITION
Filed: March 3, 2004	:	
Attorney Docket No. BOY1-H36	:	

This is a decision on the petition under the unintentional provisions of 37 CFR 1.137(b), filed November 7, 2007, to revive the above-identified application.

The petition is **GRANTED**.

The application became abandoned for failure to timely file a reply within the meaning of 37 CFR 1.113 to the final Office action of May 16, 2006. The proposed reply required for consideration of a petition to revive must be a Notice of Appeal (and appeal fee required by 37 CFR 41.20(b)(2), an amendment that *prima facie* places the application in condition for allowance, a Request for Continued Examination and submission (37 CFR 1.114), or the filing of a continuing application under 37 CFR 1.53(b). See MPEP 711.03(c)(III)(A)(2). No extensions of time pursuant to the provisions of 37 CFR 1.136(a) were timely obtained. Accordingly, the date of abandonment of this application is August 17, 2006. A Notice of Abandonment was mailed May 22, 2007.

The petition satisfies the requirements of 37 CFR 1.137(b) in that petitioner has supplied (1) the reply in the form of a Request for Continued Examination (RCE) and fee of $405.00, and the submission required by 37 CFR 1.114; (2) the petition fee of $770.00; and (3) a proper statement of unintentional delay.

Further, an extension of time under 37 CFR 1.136 must be filed prior to the expiration of the maximum extendable period for reply. *See* In re Application of S., 8 USPQ2d 1630, 1631 (Comm'r Pats. 1988). Since the $525.00 three month extension of time fee submitted with the petition on November 7, 2007 was subsequent to the maximum extendable period for reply, this fee is unnecessary and will be refunded to petitioner's credit card.

Telephone inquiries concerning this decision should be directed to Joan Olszewski at (571) 272-7751.

This application is being referred to Technology Center AU 3728 for processing of the RCE and for appropriate action by the Examiner in the normal course of business on the amendment submitted in accordance with 37 CFR 1.114.

Liana Walsh
Petitions Examiner
Office of Petitions

UNITED STATES PATENT AND TRADEMARK OFFICE

UNITED STATES DEPARTMENT OF COMMERCE
United States Patent and Trademark Office
Address: COMMISSIONER FOR PATENTS
P.O. Box 1450
Alexandria, Virginia 22313-1450
www.uspto.gov

IBM CORPORATION
PO BOX 12195
DEPT YXSA, BLDG 002
RESEARCH TRIANGLE PARK, NC 27709

Mail Date: 04/20/2010

Applicant	: Ravinder Prakash	: DECISION ON REQUEST FOR
Patent Number	: 7593600	: RECALCULATION of PATENT
Issue Date	: 09/22/2009	: TERM ADJUSTMENT IN VIEW
Appliction No	: 10/793,452	: OF WYETH AND NOTICE OF INTENT TO
Filed	: 03/04/2004	: ISSUE CERTIFICATE OF CORRECTION
		:

The Request for Recalculation is **GRANTED** to the extent indicated.

The patent term adjustment has been determined to be **1286** days. The USPTO will *sua sponte* issue a certificate of correction reflecting the amount of PTA days determined by the recalculation.

Prior to the issuance of the certificate of correction, the USPTO will afford patentee an opportunity to be heard and request reconsideration. Accordingly, patentee has **one month or thirty (30) days**, whichever is longer, to file a request for reconsideration of this patent term adjustment calculation. See 35 U.S.C. 154(b)(3)(B)(ii) and 37 CFR 1.322(a)(4). No extensions of time will be granted under 37 CFR 1.136.

Patentee should use document code PET.OP if electronically filing a request for reconsideration of this patent term adjustment calculation. The patentee must also include the information required by 37 CFR 1.705(b)(2) and the fee required by 37 CFR 1.18(e). If patentee does not file a timely request for reconsideration of this patent term adjustment calculation including the information required by 37 CFR 1.705(b)(2) and the fee required by 37 CFR 1.18(e), the USPTO will issue a certificate of correction reflecting the PTA determination noted above.

Patentee should be aware that in order to preserve the right to review in the United States District Court for the District of Columbia of the USPTO patent term adjustment determination, patentee must ensure that he or she also take the steps required under 35 U.S.C. 154(b)(4)(A) in a timely manner. Nothing in the request for recalculation should be construed as providing an alternative time frame for commencing a civil action under 35 U.S.C. 154(b)(4)(A).

Any questions concerning this decision should be directed to the Office of Patent Legal Administration at 571-272-7702.

UNITED STATES PATENT AND TRADEMARK OFFICE

UNITED STATES DEPARTMENT OF COMMERCE
United States Patent and Trademark Office
Address: COMMISSIONER FOR PATENTS
P.O. Box 1450
Alexandria, Virginia 22313-1450
www.uspto.gov

IBM CORPORATION
PO BOX 12195
DEPT YXSA, BLDG 002
RESEARCH TRIANGLE PARK, NC 27709

Mail Date: 05/17/2010

Applicant : Ravinder Prakash
Patent Number : 7593600
Issue Date : 09/22/2009
Application No : 10/793,452
Filed : 03/04/2004

: NOTICE CONCERNING IMPROPER
: CALCULATION OF PATENT TERM
: ADJUSTMENT BASED UPON USPTO
: IMPROPERLY MEASURING REDUCTION
: PERIOD UNDER 37 CFR 1.704(c)(10).

The United States Patent and Trademark Office (USPTO) discovered that in processing the recent recalculation decisions mailed in response to patentee's filed Request for Recalculation of Patent Term Adjustment in view of Wyeth, the USPTO improperly measured the reduction period for reductions under 37 CFR 1.704(c)(10). Pursuant to 37 CFR 1.704(c)(10), patentee's reduction begins on the date of filing the amendment under 37 CFR 1.312 ("1.312 amendment") or other related paper and ends on the date that the Office mails a response to the filing of the 1.312 amendment or other paper. It has been discovered that during the recalculation, the calculation failed to the limit the reduction to the mail date of the response to the 1.312 amendment or other paper. Accordingly, patentee's reductions were greater than warranted.

This notice **VACATES** the previous GRANTED request for recalculation and provides patentee with a revised GRANTED recalculation.

The patent term adjustment has been determined to be **1389** days. The USPTO will *sua sponte* issue a certificate of correction reflecting the amount of patent term adjustment (PTA) days determined by the recalculation.

Prior to the issuance of the certificate of correction, the USPTO will afford patentee an opportunity to be heard and request reconsideration. Accordingly, patentee has **one month or thirty (30) days** from the mail date of this notice, whichever is longer, to file a request for reconsideration of this PTA calculation. See 35 U.S.C. § 154(b)(3)(B)(ii) and 37 CFR 1.322(a)(4).

Patentee should use document code PET.OP if electronically filing a request for reconsideration of this PTA calculation. The patentee must also include the information required by 37 CFR 1.705(b)(2), and the fee required by 37 CFR 1.18(e). If patentee does not file a timely request for reconsideration of this PTA calculation, including the information required by 37 CFR 1.705(b)(2) and the fee required by 37 CFR 1.18(e), the USPTO will issue a certificate of correction reflecting the PTA determination noted above.

Patentee should be aware that in order to preserve the right of review of the USPTO's PTA determination in the United States District Court for the District of Columbia, patentee must ensure that the steps required under 35 U.S.C. § 154 (b)(4) are taken in a timely manner. Nothing in the request for recalculation should be construed as providing an alternative time frame for commencing a civil action under 35 U.S.C. § 154(b)(4).

UNITED STATES PATENT AND TRADEMARK OFFICE

UNITED STATES DEPARTMENT OF COMMERCE
United States Patent and Trademark Office
Address: COMMISSIONER FOR PATENTS
P.O. Box 1450
Alexandria, Virginia 22313-1450
www.uspto.gov

APPL NO.	FILING OR 371 (c) DATE	ART UNIT	FIL FEE REC'D	ATTY.DOCKET NO	DRAWINGS	TOT CLMS	IND CLMS
10/793,497	03/04/2004	1635	770	ISIC0001-104 (ISIS-4945 U		11	1

CONFIRMATION NO. 7931

CORRECTED FILING RECEIPT

OC000000013263030

34138
COZEN O'CONNOR, P.C.
1900 MARKET STREET
PHILADELPHIA, PA 19103-3508

Date Mailed: 07/16/2004

Receipt is acknowledged of this regular Patent Application. It will be considered in its order and you will be notified as to the results of the examination. Be sure to provide the U.S. APPLICATION NUMBER, FILING DATE, NAME OF APPLICANT, and TITLE OF INVENTION when inquiring about this application. Fees transmitted by check or draft are subject to collection. Please verify the accuracy of the data presented on this receipt. **If an error is noted on this Filing Receipt, please write to the Office of Initial Patent Examination's Filing Receipt Corrections, facsimile number 703-746-9195. Please provide a copy of this Filing Receipt with the changes noted thereon. If you received a "Notice to File Missing Parts" for this application, please submit any corrections to this Filing Receipt with your reply to the Notice. When the USPTO processes the reply to the Notice, the USPTO will generate another Filing Receipt incorporating the requested corrections (if appropriate).**

Applicant(s)

Ching-Leou Teng, San Diego, CA;
Phillip Dan Cook, Fallbrook, CA;
Lloyd Tillman, Oceanside, CA;
Gregory E. Hardee, Rancho Sante Fe, CA;
David J, Ecker, Encinitas, CA;
Muthiah Manoharan, Weston, MA;

Assignment For Published Patent Application

ISIS Pharmaceuticals, Inc., Carlsbad, CA;

Domestic Priority data as claimed by applicant

This application is a CON of 10/029,598 12/21/2001 PAT 6,747,014
which is a CON of 09/315,298 05/20/1999
which is a CON of 09/108,673 07/01/1998
which is a CIP of 08/886,829 07/01/1997 ABN

Foreign Applications

If Required, Foreign Filing License Granted: 06/10/2004

Projected Publication Date: To Be Determined - pending completion of Sequence Disclosures

Non-Publication Request: No

Early Publication Request: No

Title

Compositions and methods for non-parenteral delivery of oligonucleotides

Preliminary Class

514

LICENSE FOR FOREIGN FILING UNDER
Title 35, United States Code, Section 184
Title 37, Code of Federal Regulations, 5.11 & 5.15

GRANTED

The applicant has been granted a license under 35 U.S.C. 184, if the phrase "IF REQUIRED, FOREIGN FILING LICENSE GRANTED" followed by a date appears on this form. Such licenses are issued in all applications where the conditions for issuance of a license have been met, regardless of whether or not a license may be required as set forth in 37 CFR 5.15. The scope and limitations of this license are set forth in 37 CFR 5.15(a) unless an earlier license has been issued under 37 CFR 5.15(b). The license is subject to revocation upon written notification. The date indicated is the effective date of the license, unless an earlier license of similar scope has been granted under 37 CFR 5.13 or 5.14.

This license is to be retained by the licensee and may be used at any time on or after the effective date thereof unless it is revoked. This license is automatically transferred to any related applications(s) filed under 37 CFR 1.53(d). This license is not retroactive.

The grant of a license does not in any way lessen the responsibility of a licensee for the security of the subject matter as imposed by any Government contract or the provisions of existing laws relating to espionage and the national security or the export of technical data. Licensees should apprise themselves of current regulations especially with respect to certain countries, of other agencies, particularly the Office of Defense Trade Controls, Department of State (with respect to Arms, Munitions and Implements of War (22 CFR 121-128)); the Office of Export Administration, Department of Commerce (15 CFR 370.10 (j)); the Office of Foreign Assets Control, Department of Treasury (31 CFR Parts 500+) and the Department of Energy.

NOT GRANTED

No license under 35 U.S.C. 184 has been granted at this time, if the phrase "IF REQUIRED, FOREIGN FILING LICENSE GRANTED" DOES NOT appear on this form. Applicant may still petition for a license under 37 CFR 5.12, if a license is desired before the expiration of 6 months from the filing date of the application. If 6 months has lapsed from the filing date of this application and the licensee has not received any indication of a secrecy order under 35 U.S.C. 181, the licensee may foreign file the application pursuant to 37 CFR 5.15(b).

UNITED STATES PATENT AND TRADEMARK OFFICE

Commissioner for Patents
United States Patent and Trademark Office
P.O. Box 1450
Alexandria, VA 22313-1450
www.uspto.gov

PAVEL V. KORCHAGIN
APT. 81, HOUSE 30, BUILDING 1
BESKUDNIKOVSKY BOULEVARD
MOSCOW, RUSSIA 127474
AIRMAIL

COPY MAILED
NOV 07 2006
OFFICE OF PETITIONS

In re Application of :
KORCHAGIN et al. :
Application No. 10/793,508 :
Filed: March 4, 2004 :
Attorney Docket No. 2004-12.VBT :

Muriel Ciprian (Ciprian) and Vladmir Bararushkin (Bararushkin) have filed numerous papers in the above-identified application with the United States Patent and Trademark Office (USPTO).

Applicants for patents may file and prosecute their own patent applications or they may be represented by a registered attorney, registered agent, or other individual authorized to practice before the USPTO in patent matters. See 37 CFR 11.6 and 11.9(a). The USPTO cannot aid in the selection of a registered attorney or agent. See 37 CFR 1.31.

An examination of this application reveals that applicants have attempted to appoint or to use Ciprian and Bararushkin, neither of whom are registered to practice before the USPTO in patent matters or he not been granted limited recognition under 37 CFR 11.9(a) to represent the applicants. Moreover, Ciprian is not a named inventor in the application, and there is no evidence that Ciprian and Bararushkin are assignees of the entire interest in the application. The attempt to appoint or use Ciprian and Bararushkin is contrary to the Code of Federal Regulations, 37 CFR 1.31 and 1.32. Therefore, the appointment and use is void, *ab initio*. We will not recognize the appointment.

The present application has been filed by joint inventors. A single inventor may prosecute the application when the other joint inventor has given him or her power of attorney. See 37 CFR 1.32(c)(1). The file does not include an appointment of a single inventor as power of attorney by the other joint inventors. Therefore, unless a registered patent attorney or agent is appointed to represent the inventors, or a power of attorney is given to one of the named inventors, all named inventors must sign all communications with the Office. See 37 CFR 1.33(b).

While an applicant may prosecute the application, lack of skill in this field usually act as a liability in affording the maximum protection for the invention disclosed. The efforts to appoint or use Ciprian and Bararushkin to prosecute the application suggest that applicants desire to be represented. Applicants are, therefore, encouraged to secure the services of a registered patent attorney or agent to prosecute the application, since the value of a patent is largely dependent upon skillful preparation and prosecution.

A list of registered patent attorneys and agents is available on the USPTO Internet web site http://www.uspto.gov in the Site Index under "Attorney and Agent Roster, Patent." Applicants may also obtain a list of registered patent attorneys and agents located in a geographical region by writing to Mail Stop OED, Director of the U.S. Patent and Trademark Office, P.O. Box 1450, Alexandria, VA 22313-1450.

Any communications submitted to the USPTO by an inappropriate party will not be recognized and simply placed in the above-identified application. No further action will be taken.

Brian Hearn
Petitions Examiner
Office of Petitions

UNITED STATES PATENT AND TRADEMARK OFFICE

Commissioner for Patents
United States Patent and Trademark Office
P.O. Box 1450
Alexandria, VA 22313-1450
www.uspto.gov

OBLON SPIVAK MCCLELLAND
MAIER & NEUSTADT, P.C.
1940 DUKE STREET
ALEXANDRIA, VA 22314

COPY MAILED
MAY 22 2008

In re Application of :
Hajime Sakamoto et al :
Application No. 10/793,515 : ON PETITION
Filed: March 4, 2004 :
Attorney Docket No. 304118US40 COUT

This is a decision on the petition, filed May 21, 2008 under 37 CFR 1.313(c)(2) to withdraw the above-identified application from issue after payment of the issue fee.

The petition is **GRANTED**.

The above-identified application is withdrawn from issue for consideration of a submission under 37 CFR 1.114 (request for continued examination). See 37 CFR 1.313(c)(2).

Petitioner is advised that the issue fee paid on April 7, 2008 in the above-identified application cannot be refunded. If, however, the above-identified application is again allowed, petitioner may request that it be applied towards the issue fee required by the new Notice of Allowance.[1]

Telephone inquiries should be directed to Irvin Dingle at (571) 272-3210.

This matter is being referred to Technology Center AU 2841 for processing of the request for continued examination under 37 CFR 1.114 and for consideration of the concurrently filed Information Disclosure Statement.

Irvin Dingle
Petitions Examiner
Office of Petitions

[1] The request to apply the issue fee to the new Notice may be satisfied by completing and returning the new Issue Fee Transmittal Form PTOL-85(b), which includes the following language thereon: Commissioner for Patents is requested to apply the Issue Fee and Publication Fee (if any) or re-apply any previously paid issue fee to the application identified above. Petitioner is advised that, whether a fee is indicated as being due or not, the Issue Fee Transmittal Form **must** be completed and timely submitted to avoid abandonment. Note the language in bold text on the first page of the Notice of Allowance and Fee(s) Due (PTOL-85).

UNITED STATES PATENT AND TRADEMARK OFFICE

COMMISSIONER FOR PATENTS
UNITED STATES PATENT AND TRADEMARK OFFICE
P.O. BOX 1450
ALEXANDRIA, VA 22313-1450
www.uspto.gov

BASF CORPORATION
Patent Department
1609 BIDDLE AVENUE
MAIN BUILDING
WYANDOTTE, MI 48192

COPY MAILED
APR 30 2008
OFFICE OF PETITIONS

In re Application of	:	
Swaminathan Ramesh, et al.	:	
Application No. 10/793,529	:	ON PETITION
Filed: March 4, 2004	:	
Attorney Docket No. IN-5675	:	

This is a decision on the petition under 37 CFR 1.137(b), filed December 6, 2007, to revive the above-identified application.

The petition is **DISMISSED**.

Any request for reconsideration of this decision must be submitted within TWO (2) MONTHS from the mail date of this decision. Extensions of time under 37 CFR 1.136(a) are permitted. The reconsideration request should include a cover letter entitled "Renewed Petition under 37 CFR 1.137(b)." This is **not** a final agency action within the meaning of 5 U.S.C. § 704.

A grantable petition under 37 CFR 1.137(b)[1] must be accompanied by: (1) the required reply,[2] unless previously filed; (2) the petition fee as set forth in 37 CFR 1.17(m); (3) a statement that the entire delay in filing the required reply from the due date for the reply until the filing of a grantable petition pursuant to 37 CFR 1.137(b) was unintentional; and (4) any terminal disclaimer (and fee as set forth in 37 CFR 1.20(d)) required by 37 CFR 1.137(c). Where there is a question as to whether either the abandonment or the delay in filing a petition under 37 CFR 1.137 was unintentional, the Commissioner may require additional information. See MPEP 711.03(c)(II)(C) and (D). The instant petition lacks item 1.

It is noted that an amendment was filed on December 6, 2007. However, the amendment is considered non-responsive, since it did not place the application in condition for allowance. See the attached Advisory Action. Accordingly, the proposed reply required for consideration of a petition to revive this application must be a Notice of Appeal (and appeal fee required by 37 CFR 1.17(b)), an amendment that *prima facie* places the application in condition for allowance, or the

[1] As amended effective December 1, 1997. See Changes to Patent Practice and Procedure; Final Rule Notice, 62 Fed. Reg. 53131, 53194-95 (October 10, 1997), 1203 Off. Gaz. Pat. Office 63, 119-20 (October 21, 1997).

[2] In a nonprovisional application abandoned for failure to prosecute, the required reply may be met by the filing of a continuing application. In an application or patent, abandoned or lapsed for failure to pay the issue fee or any portion thereof, the required reply must be the payment of the issue fee or any outstanding balance thereof.

filing of a submission under 37 CFR 114 (RCE) or a continuing application under 37 CFR 1.53(b). See 711.03(c)(II)(A)(2).

Further correspondence with respect to this matter should be addressed as follows:

By mail: Mail Stop PETITION
Commissioner for Patents
Post Office Box 1450
Alexandria, VA 22313-1450

By hand: U.S. Patent and Trademark Office
Customer Service Window, Mail Stop PETITION
Randolph Building
401 Dulany Street
Alexandria, VA 22314

The centralized facsimile number is **(571) 273-8300**.

The file does not indicate a change of address has been submitted, although the address given on the petition differs from the address of record. If appropriate, a change of address should be filed in accordance with MPEP 601.03. A courtesy copy of this decision is being mailed to the address given on the petition; however, the Office will mail all future correspondence solely to the address of record.

Any questions concerning this decision may be directed to the undersigned at (571) 272-3204.

Sherry D. Brinkley
Petitions Examiner
Office of Petitions

Attachment: Advisory Action

cc: DAVID M. LAPRAIRIE
HOWARD AND HOWARD ATTORNEYS, P.C.
THE PINEHURST OFFICE CENTER, SUITE 101
39400 WOODWARD AVE.
BLOOMFIELD HILLS, MI 48304-5151

Advisory Action Before the Filing of an Appeal Brief	Application No. 10/793,529	Applicant(s) RAMESH ET AL.	
	Examiner Katarzyna Wyrozebski	Art Unit 1796	

--The MAILING DATE of this communication appears on the cover sheet with the correspondence address --

THE REPLY FILED 06 December 2007 FAILS TO PLACE THIS APPLICATION IN CONDITION FOR ALLOWANCE.

1. ☒ The reply was filed after a final rejection, but prior to or on the same day as filing a Notice of Appeal. To avoid abandonment of this application, applicant must timely file one of the following replies: (1) an amendment, affidavit, or other evidence, which places the application in condition for allowance; (2) a Notice of Appeal (with appeal fee) in compliance with 37 CFR 41.31; or (3) a Request for Continued Examination (RCE) in compliance with 37 CFR 1.114. The reply must be filed within one of the following time periods:
   a) ☐ The period for reply expires _____months from the mailing date of the final rejection.
   b) ☒ The period for reply expires on: (1) the mailing date of this Advisory Action, or (2) the date set forth in the final rejection, whichever is later. In no event, however, will the statutory period for reply expire later than SIX MONTHS from the mailing date of the final rejection.
   Examiner Note: If box 1 is checked, check either box (a) or (b). ONLY CHECK BOX (b) WHEN THE FIRST REPLY WAS FILED WITHIN TWO MONTHS OF THE FINAL REJECTION. See MPEP 706.07(f).

Extensions of time may be obtained under 37 CFR 1.136(a). The date on which the petition under 37 CFR 1.136(a) and the appropriate extension fee have been filed is the date for purposes of determining the period of extension and the corresponding amount of the fee. The appropriate extension fee under 37 CFR 1.17(a) is calculated from: (1) the expiration date of the shortened statutory period for reply originally set in the final Office action; or (2) as set forth in (b) above, if checked. Any reply received by the Office later than three months after the mailing date of the final rejection, even if timely filed, may reduce any earned patent term adjustment. See 37 CFR 1.704(b).

NOTICE OF APPEAL

2. ☐ The Notice of Appeal was filed on _____. A brief in compliance with 37 CFR 41.37 must be filed within two months of the date of filing the Notice of Appeal (37 CFR 41.37(a)), or any extension thereof (37 CFR 41.37(e)), to avoid dismissal of the appeal. Since a Notice of Appeal has been filed, any reply must be filed within the time period set forth in 37 CFR 41.37(a).

AMENDMENTS

3. ☒ The proposed amendment(s) filed after a final rejection, but prior to the date of filing a brief, will not be entered because
   (a) ☒ They raise new issues that would require further consideration and/or search (see NOTE below);
   (b) ☐ They raise the issue of new matter (see NOTE below);
   (c) ☐ They are not deemed to place the application in better form for appeal by materially reducing or simplifying the issues for appeal; and/or
   (d) ☐ They present additional claims without canceling a corresponding number of finally rejected claims.
   NOTE: *see attachment to the Advisory*. (See 37 CFR 1.116 and 41.33(a)).
4. ☐ The amendments are not in compliance with 37 CFR 1.121. See attached Notice of Non-Compliant Amendment (PTOL-324).
5. ☐ Applicant's reply has overcome the following rejection(s): _____.
6. ☐ Newly proposed or amended claim(s) _____ would be allowable if submitted in a separate, timely filed amendment canceling the non-allowable claim(s).
7. ☒ For purposes of appeal, the proposed amendment(s): a) ☒ will not be entered, or b) ☐ will be entered and an explanation of how the new or amended claims would be rejected is provided below or appended.
   The status of the claim(s) is (or will be) as follows:
   Claim(s) allowed: *31,33-35 and 37-43*.
   Claim(s) objected to: *3,9,10,13-15,20,28,32 and 36*.
   Claim(s) rejected: *1,2,4-8,11,12,16-19 and 21-27*.
   Claim(s) withdrawn from consideration: _____.

AFFIDAVIT OR OTHER EVIDENCE

8. ☐ The affidavit or other evidence filed after a final action, but before or on the date of filing a Notice of Appeal will not be entered because applicant failed to provide a showing of good and sufficient reasons why the affidavit or other evidence is necessary and was not earlier presented. See 37 CFR 1.116(e).
9. ☐ The affidavit or other evidence filed after the date of filing a Notice of Appeal, but prior to the date of filing a brief, will not be entered because the affidavit or other evidence failed to overcome all rejections under appeal and/or appellant fails to provide a showing a good and sufficient reasons why it is necessary and was not earlier presented. See 37 CFR 41.33(d)(1).
10. ☐ The affidavit or other evidence is entered. An explanation of the status of the claims after entry is below or attached.

REQUEST FOR RECONSIDERATION/OTHER

11. ☐ The request for reconsideration has been considered but does NOT place the application in condition for allowance because: _____
12. ☐ Note the attached Information *Disclosure Statement*(s). (PTO/SB/08) Paper No(s). _____
13. ☐ Other: _____.

/Katarzyna Wyrozebski/
Primary Examiner, Art Unit 1796

Attachment to the Advisory

Applicant's suggested amendment after final, filed 12/6/2007 will not be entered. Proposed amendment adds new claims 44-52 which have not been previously submitted for examination. After careful consideration of the claims, it is examiner's position that the claims are much broader in claim (at least the independent claims) and contain new limitations.

Claim 44 discloses a new temperature range

Claim 47 shadows previously examined claim and is rejectable under 102(e)

Claim 50 is viewed as one referring to completely different polyester than one suggested in proposed claim 18.

For claims 1-43, the applicants have incorporated limitation of allowed claim 3 into claim 1.

If the applicants wish for the examiner to consider newly added claims, the applicants are requested to file an RCE.

In view of the above remarks all pending rejections are incorporated here by reference.

Any inquiry concerning this communication or earlier communications from the examiner should be directed to Katarzyna Wyrozebski whose telephone number is (571) 272-1127. The examiner can normally be reached on Mon-Thurs 8:30 AM-2:30 PM.

If attempts to reach the examiner by telephone are unsuccessful, the examiner's supervisor, David Wu can be reached on (571) 272-1114. The fax phone number for the organization where this application or proceeding is assigned is 571-273-8300.

Information regarding the status of an application may be obtained from the Patent Application Information Retrieval (PAIR) system. Status information for published applications may be obtained from either Private PAIR or Public PAIR. Status information for unpublished applications is available through Private PAIR only. For more information about the PAIR system, see http://pair-direct.uspto.gov. Should you have questions on access to the Private PAIR system, contact the Electronic Business Center (EBC) at 866-217-9197 (toll-free). If you would like assistance from a USPTO Customer Service Representative or access to the automated information system, call 800-786-9199 (IN USA OR CANADA) or 571-272-1000.

/Katarzyna Wyrozebski/
Primary Examiner, Art Unit 1796
April 2, 2008

UNITED STATES PATENT AND TRADEMARK OFFICE

COMMISSIONER FOR PATENTS
UNITED STATES PATENT AND TRADEMARK OFFICE
P.O. BOX 1450
ALEXANDRIA, VA 22313-1450
www.uspto.gov

HOWARD & HOWARD ATTORNEYS, P.C.
BASF CORPORATION
THE PINEHURST OFFICE CENTER, SUITE #101
39400 WOODWARD AVENUE
BLOOMFIELD HILLS, MI 48304-5151

COPY MAILED

AUG 15 2008

In re Application of	:	
Swaminathan Ramesh, et al.	:	
Application No. 10/793,529	:	ON PETITION
Filed: March 4, 2004	:	
Attorney Docket No. IN-5675	:	

This is a decision on the renewed petition, filed June 26, 2008, to revive the above-identified application under the provisions of 37 CFR 1.137(b).

The petition is **GRANTED**.

The application became abandoned for a failure to reply in a timely manner to the final Office action mailed February 27, 2007. On December 6, 2007 a petition under 37 CFR 1.137(b) was filed; however, the petition was dismissed by a decision mailed April 30, 2008. In response, on June 26, 2008, the present petition was filed.

The present petition satisfies the conditions for revival pursuant to the provisions of 37 CFR 1.137(b) in that petitioner has supplied (1) the reply in the form of an amendment; (2) the petition fee of $1,540; and (3) an adequate statement of unintentional delay.

The application is being referred to Technology Center AU 1796 for appropriate action by the Examiner in the normal course of business on the response received June 26, 2008.

Telephone inquiries concerning this decision should be directed to the undersigned at (571) 272-3204. Inquiries relating to further prosecution should be directed to the Technology Center.

Sherry D. Brinkley
Petitions Examiner
Office of Petitions

UNITED STATES PATENT AND TRADEMARK OFFICE

UNITED STATES DEPARTMENT OF COMMERCE
United States Patent and Trademark Office
Address: COMMISSIONER FOR PATENTS
P.O. Box 1450
Alexandria, Virginia 22313-1450
www.uspto.gov

Weaver Austin Villeneuve & Sampson LLP
P.O. BOX 70250
OAKLAND, CA 94612-0250

Mail Date: 08/03/2010

Applicant	: Pamela Lee	: DECISION ON REQUEST FOR
Patent Number	: 7650636	: RECALCULATION of PATENT
Issue Date	: 01/19/2010	: TERM ADJUSTMENT IN VIEW
Application No	: 10/793,535	: OF WYETH AND NOTICE OF INTENT TO
Filed	: 03/03/2004	: ISSUE CERTIFICATE OF CORRECTION
		:

The Request for Recalculation is **GRANTED** to the extent indicated.

The patent term adjustment has been determined to be **1673** days. The USPTO will *sua sponte* issue a certificate of correction reflecting the amount of PTA days determined by the recalculation.

Prior to the issuance of the certificate of correction, the USPTO will afford patentee an opportunity to be heard and request reconsideration. Accordingly, patentee has **one month or thirty (30) days**, whichever is longer, to file a request for reconsideration of this patent term adjustment calculation. See 35 U.S.C. 154(b)(3)(B)(ii) and 37 CFR 1.322(a)(4). No extensions of time will be granted under 37 CFR 1.136.

Patentee should use document code PET.OP if electronically filing a request for reconsideration of this patent term adjustment calculation. The patentee must also include the information required by 37 CFR 1.705(b)(2) and the fee required by 37 CFR 1.18(e). If patentee does not file a timely request for reconsideration of this patent term adjustment calculation including the information required by 37 CFR 1.705(b)(2) and the fee required by 37 CFR 1.18(e), the USPTO will issue a certificate of correction reflecting the PTA determination noted above.

Patentee should be aware that in order to preserve the right to review in the United States District Court for the District of Columbia of the USPTO patent term adjustment determination, patentee must ensure that he or she also take the steps required under 35 U.S.C. 154(b)(4)(A) in a timely manner. Nothing in the request for recalculation should be construed as providing an alternative time frame for commencing a civil action under 35 U.S.C. 154(b)(4)(A).

Any questions concerning this decision should be directed to the Office of Patent Legal Administration at 571-272-7702.

UNITED STATES PATENT AND TRADEMARK OFFICE

Commissioner for Patents
United States Patent and Trademark Office
P.O. Box 1450
Alexandria, VA 22313-1450
www.uspto.gov

MAILED
FROM DIRECTORS OFFICE

DEC 0 7 2004

TECHNOLOGY CENTER 3600

GENE SCOTT; PATENT LAW & VENTURE GROUP
3140 RED HILL AVENUE
SUITE 150
COSTA MESA CA 92626-3440

In re application of
Bret H. Banker
Application No. 10/793,544
Filed: March 2, 2004
For: ADJUSTABLE TENSION CLIP AND METHOD OF USE

DECISION ON PETITION TO MAKE SPECIAL (ACCELERATED EXAMINATION)

This is in response to the petition filed on September 6, 2004, to make the above-identified application special on the basis of special examining procedure for certain new applications - accelerated examination as set forth in MPEP § 708.02, VIII.

The requirements for granting special status under this section are: (A) a petition to make special accompanied by the fee set forth in 37 CFR 1.17(h); (B) all claims being directed to a single invention, or an election without traverse if the Office determines that all the claims are not directed to a single invention; (C) a statement that a pre-examination search was made listing the field of search; (D) one copy of each of the references deemed most closely related to the subject matter encompassed by the claims if said references are not already of record; and (E) a detailed discussion of how the claimed subject matter is patentable over the references in accordance with 37 CFR 1.111 (b) and (c).

In satisfaction of item (B) above, the petitioner states, "However, if the Office determines that all claims presented are not obviously directed to a single invention, applicant will make an election without traverse."

Since all of the requirements for special status under MPEP § 708.02, VIII have been met, the petition is **GRANTED**.

The examiner is directed (1) to make an interference search for possible interfering applications, (2) to promptly examine this application out of turn, and (3) if any interfering application is discovered, to examine such application simultaneously and state in the first official letter of such application that it is being taken out of turn because of a possible interference.

Petitioner is advised that this application will continue to be special, throughout its entire prosecution and pendency, including interference or appeal, if any, only if petitioner makes a prompt ***bona fide*** effort, in response to each Office action, to place the application in condition for allowance, even if it is necessary to conduct an interview with the examiner to accomplish this purpose.

Randolph A. Reese
Special Programs Examiner
Technology Center 3600
(703) 308-2121

RAR: 12/1/04

UNITED STATES PATENT AND TRADEMARK OFFICE

Commissioner for Patents
United States Patent and Trademark Office
P.O. Box 1450
Alexandria, VA 22313-1450
www.uspto.gov

COPY MAILED
NOV 17 2006
OFFICE OF PETITIONS

JOHN S. CHRISTOPHER
6033 WEST CENTURY BOULEVARD, SUITE #400
LOS ANGELES, CA 90045-6416

In re Application of	:	
Bret H. Banker	:	
Application No. 10/793,544	:	DECISION GRANTING PETITION
Filed: March 2, 2004	:	UNDER 37 CFR 1.137(b)
Attorney Docket No. Banker.B-01	:	

This is a decision on the petition under 37 CFR 1.137(b), filed July 8, 2006, to revive the above-identified application.

The petition is **GRANTED**.

The petition satisfies the conditions for revival pursuant to the provisions of 37 CFR 1.137(b) in that (1) the reply in the form of an amendment (2) the petition fee; and (3) the required statement of unintentional delay have been received. Accordingly, the reply to the Nonfinal Rejection of December 21, 2004, is accepted as having been unintentionally delayed.

Telephone inquiries concerning this decision should be directed to the undersigned at (571) 272-3208.

This matter is being referred to Technology Center AU 3632.

Karen Creasy

Karen Creasy
Petitions Examiner
Office of Petitions

UNITED STATES PATENT AND TRADEMARK OFFICE

Commissioner for Patents
United States Patent and Trademark Office
P.O. Box 1450
Alexandria, VA 22313-1450
www.uspto.gov

JAMES ALBERT WARD
6924 CAMINO PACHECO
SAN DIEGO CA 92111

MAILED
31 MAY 2006

In re Application of
SOTO, ALEXANDER I., et al.
Application No. 10/793,546
Filed: March 3, 2004
For: **SYSTEM AND METHOD FOR PERFORMING IN-SERVICE FIBER OPTIC NETWORK CERTIFICATION**

DECISION ON PETITION TO MAKE SPECIAL

This is a decision on the petition filed April 26, 2006 under Manual of Patent Examination Procedure §708.02,VIII requesting accelerated examination.

The petition under Manual of Patent Examination Procedure §708.02, VIII, must:
(1) be filed prior to receiving any examination by the examiner,
(2) be accompanied by the required fee- $130,
(3) the claims should be directed to a single invention (if it is determined that the claims pertain to more than one invention, then applicant will have to make an election without traverse or forfeit accelerated examination status),
(4) state that a pre-examination search was made, and fully discuss the search method employed, such as classes and subclasses searched, publications, Chemical abstracts, patents, etc. A search made by a foreign patent office satisfies this requirement,
(5) be accompanied by a copy of each of the references most closely related to the subject matter encompassed by the claims if said references are not already of record,
(6) fully discuss the references, pointing out with the particularity required by 37 C.F.R. §1.111 (b) and (c), how the claimed subject matter is patentable over the references.

The petitioner meets all the above-listed requirements. Accordingly, the petition is **GRANTED**.

The application will retain its special status throughout its entire prosecution, including any appeal to the Board of Patent Appeals and Interferences, subject only to diligent prosecution by the applicant. The application file is being forwarded to the examiner for appropriate action in due course.

Kenneth A. Wieder
Special Program Examiner
Technology Center 2600
Communications

SPE RESPONSE FOR CERTIFICATE OF CORRECTION

Paper No.:20091030

DATE : November 01, 2009

TO SPE OF : ART UNIT 2627

SUBJECT : Request for Certificate of Correction on Patent No.: 7339766

A response is requested with respect to the accompanying request for a certificate of correction.

Please complete this form and return with file, within **7** days to:
Certificates of Correction Branch - ST (South Tower) 9A22
Palm location **7590** - Tel. No. (703) 305-8309

With respect to the change(s) requested, correcting Office and/or Applicant's errors, should the patent read as shown in the certificate of correction? No new matter should be introduced, nor should the scope or meaning of the claims be changed.

Thank You For Your Assistance **Certificates of Correction Branch**

The request for issuing the above-identified correction(s) is hereby:

Note your decision on the appropriated box.

☒ **Approved** All changes apply.

☐ **Approved in Part** Specify below which changes **do not** apply.

☐ **Denied** State the reasons for denial below.

Comments:

Re CofC filed 9/28/09:
The changes requested by applicant are appropriate so as to improve the consistency betwen the preambles of the dependent claims and the independent claims from which they depend. In each case the word "system" has been changed to "slider" since the independent claims each set forth "a slider comprising" rather than "a system comprising".

/WAYNE R YOUNG/
Supervisory Patent Examiner.Art Unit 2627

UNITED STATES PATENT AND TRADEMARK OFFICE

Commissioner for Patents
United States Patent and Trademark Office
P.O. Box 1450
Alexandria, VA 22313-1450
www.uspto.gov

COPY MAILED

FEB 16 2007

OFFICE OF PETITIONS

Jeffrey J. Brosemer, Ph.D, ESQ, LLC
138 S. Telegraph Hill Road
Holmdel, NJ 07733

In re Application of	:	
Achyut Dutta et al.	:	
Application No. 10/793,576	:	DECISION ON PETITION
Filed: March 4, 2004	:	TO WITHDRAW
Attorney Docket No. BPIL-04-001	:	FROM RECORD
	:	

This is a decision on the Request to Withdraw as attorney or agent of record under 37 C.F.R. § 1.36(b), filed October 24, 2006.

The request is **NOT APPROVED** as moot.

A review of the file record indicates that the power of attorney to Jeffrey J. Brosemer, Ph.D has been revoked by the applicant of the patent application on October 24, 2006. Accordingly, the request to withdraw under 37 C.F.R. § 1.36(b) is moot.

All future communications from the Office will continue to be directed to the below-listed address until otherwise notified by applicant.

Telephone inquires concerning this decision should be directed to Terri Williams at 571-272-2991.

J. Williams

Terri Williams
Petitions Examiner
Office of Petitions

cc: **Banpil Photonics, Inc.**
953 Bunker Hill Lane
Suite 400
Santa Clara, CA 95054-1131

UNITED STATES PATENT AND TRADEMARK OFFICE

UNITED STATES DEPARTMENT OF COMMERCE
United States Patent and Trademark Office
Address: COMMISSIONER FOR PATENTS
P.O. Box 1450
Alexandria, Virginia 22313-1450
www.uspto.gov

APPLICATION NUMBER	FILING OR 371 (c) DATE	FIRST NAMED APPLICANT	ATTY. DOCKET NO./TITLE
10/793,576	03/04/2004	Achyut Dutta	BPIL-04-001

CONFIRMATION NO. 5841

OC000000022523256

OC000000022523256

Jeffrey J. Brosemer, Ph.D., ESQ, LLC
138 S. Telegraph Hill Road
Holmdel, NJ 07733

Date Mailed: 02/16/2007

NOTICE REGARDING CHANGE OF POWER OF ATTORNEY

This is in response to the Power of Attorney filed 10/24/2006.

- The Power of Attorney to you in this application has been revoked by the applicant. Future correspondence will be mailed to the new address of record(37 CFR 1.33).

Terri S. Williams

TERRI S WILLIAMS
OP (571) 272-2991

FORMER ATTORNEY/AGENT COPY

UNITED STATES PATENT AND TRADEMARK OFFICE

UNITED STATES DEPARTMENT OF COMMERCE
United States Patent and Trademark Office
Address: COMMISSIONER FOR PATENTS
P.O. Box 1450
Alexandria, Virginia 22313-1450
www.uspto.gov

APPLICATION NUMBER	FILING OR 371 (c) DATE	FIRST NAMED APPLICANT	ATTY. DOCKET NO./TITLE
10/793,576	03/04/2004	Achyut Dutta	BPIL-04-001

CONFIRMATION NO. 5841

OC000000022523336

OC000000022523336

Banpil Photonics, Inc.
2953 Bunker Hill Lane
Suite 400
Santa Clara, CA 95054-1131

Date Mailed: 02/16/2007

NOTICE OF ACCEPTANCE OF POWER OF ATTORNEY

This is in response to the Power of Attorney filed 10/24/2006.

The Power of Attorney in this application is accepted. Correspondence in this application will be mailed to the above address as provided by 37 CFR 1.33.

Terri S. Williams

TERRI S WILLIAMS
OP (571) 272-2991

ATTORNEY/APPLICANT COPY

UNITED STATES PATENT AND TRADEMARK OFFICE

UNITED STATES DEPARTMENT OF COMMERCE
United States Patent and Trademark Office
Address: COMMISSIONER FOR PATENTS
P.O. Box 1450
Alexandria, Virginia 22313-1450
www.uspto.gov

APPLICATION NUMBER	FILING OR 371 (c) DATE	FIRST NAMED APPLICANT	ATTY. DOCKET NO./TITLE
10/793,576	03/04/2004	Achyut Dutta	BPIL-04-001

CONFIRMATION NO. 5841

OC000000022523256

OC000000022523256

Jeffrey J. Brosemer, Ph.D., ESQ, LLC
138 S. Telegraph Hill Road
Holmdel, NJ 07733

Date Mailed: 02/16/2007

NOTICE REGARDING CHANGE OF POWER OF ATTORNEY

This is in response to the Power of Attorney filed 10/24/2006.

- The Power of Attorney to you in this application has been revoked by the applicant. Future correspondence will be mailed to the new address of record(37 CFR 1.33).

Terri S. Williams

TERRI S WILLIAMS
OP (571) 272-2991

NEW ATTORNEY/AGENT COPY

UNITED STATES PATENT AND TRADEMARK OFFICE

Commissioner for Patents
United States Patent and Trademark Office
P.O. Box 1450
Alexandria, VA 22313-1450
www.uspto.gov
DIW Jan-08

DOUGLAS J. HURA, ESQUIRE
DENTSPLY INTERNATIONAL INC.
570 WEST COLLEGE AVENUE
YORK PA 17405

COPY MAILED

JAN 0 4 2008

OFFICE OF PETITIONS

In re Application of :
Robert J. Pieroni :
Application Number: 10/793579 : DECISION ON PETITION
Filing Date: 03/04/2004 :
Attorney Docket Number: LDC-951 :

This is a decision on the petition filed on November 13, 2007, under 37 CFR 1.137(b),[1] to revive the above-identified application.

The petition is **GRANTED**.

The application became abandoned on May 25, 2006, for failure to timely submit a reply to the Notice of Non-Compliant Amendment (37 CFR 1.121) mailed on April 25, 2006, which set a one (1) month shortened period for reply. No extensions of the time for reply in accordance with 37 CFR 1.136(a) were obtained. Notice of Abandonment was mailed on November 13, 2006.

Receipt of the amendment filed with the present petition is acknowledged.

---

[1] Effective December 1, 1997, the provisions of 37 CFR 1.137(b) now provide that where the delay in reply was unintentional, a petition may be filed to revive an abandoned application or a lapsed patent pursuant to 37 CFR 1.137(b). A grantable petition filed under the provisions of 37 CFR 1.137(b) must be accompanied by:

(1) the required reply, unless previously filed. In a nonprovisional application abandoned for failure to prosecute, the required reply may be met by the filing of a continuing application. In a nonprovisional utility or plant application filed on or after June 8, 1995, and abandoned for failure to prosecute, the required reply may also be met by the filing of a request for continuing examination in compliance with § 1.114. In an application or patent, abandoned or lapsed for failure to pay the issue fee or any portion thereof, the required reply must be the payment of the issue fee or any outstanding balance thereof. In an application abandoned for failure to pay the publication fee, the required reply must include payment of the publication fee.

(2) the petition fee as set forth in 37 CFR 1.17(m);

(3) a statement that the entire delay in filing the required reply from the due date for the reply until the filing of a grantable petition pursuant to 37 CFR 1.137(b) was unintentional. The Commissioner may required additional information where there is a question whether the delay was unintentional; and

(4) any terminal disclaimer (and fee as set forth in 37 CFR 1.20(d)) required pursuant to 37 CFR 1.137(c)).

An extension of time under 37 CFR 1.136 must be filed prior to the expiration of the maximum extendable period for reply.[2] The three (3)-month extension request filed on November 13, 2007, was submitted more than three (3) months after the end of the period for reply to the Notice mailed on April 25, 2006, and therefore is unnecessary. The extension of time fee will be refunded.

The application is being referred to Technology Center Art Unit 1723 for further processing.

Telephone inquiries concerning this matter may be directed to the undersigned at (571)272-3231.

D Wood

Douglas I. Wood
Senior Petitions Attorney
Office of Petitions

[2] See In re Application of S., 8 USPQ2d 1630, 1631 (Comm'r Pats. 1988).

UNITED STATES PATENT AND TRADEMARK OFFICE

Commissioner for Patents
United States Patent and Trademark Office
P.O. Box 1450
Alexandria, VA 22313-1450
www.uspto.gov

DOUGLAS J. HURA
DENTSPLY INTERNATIONAL INC.
570 WEST COLLEGE AVENUE
YORK, PA 17405

COPY MAILED

SEP 2 8 2009

OFFICE OF PETITIONS

In re Application of	:	
Robert J. Pieroni	:	
Application No. 10/793,579	:	ON PETITION
Filed: March 4, 2004	:	
Attorney Docket No. LDC-951	:	

This is a decision on the petition under the unintentional provisions of 37 CFR 1.137(b), filed August 10, 2009, to revive the above-identified application.

The petition is **GRANTED.**

The application became abandoned for failure to timely file a reply within the meaning of 37 CFR 1.113 to the final Office action of January 15, 2008. The proposed reply required for consideration of a petition to revive must be a Notice of Appeal (and appeal fee required by 37 CFR 41.20(b)(2), an amendment that prima facie places the application in condition for allowance, a Request for Continued Examination and submission (37 CFR 1.114), or the filing of a continuing application under 37 CFR 1.53(b). See MPEP 711.03(c)(III)(A)(2). Three month extension of time pursuant to the provisions of 37 CFR 1.136(a) was obtained. Accordingly, the date of abandonment of this application is July 16, 2008.

An extension of time received under 37 CFR 1.136 must be filed prior to the expiration of the maximum extendable period for reply. See In re Application of S., 8 USPQ2d 1630, 1631 (Comm'r Pats. 1988). Accordingly, since the $1110 extension of time submitted with the petition on August 11, 2009 was subsequent to the maximum extendable period for reply, this fee is unnecessary and will be credit to petitioner's deposit account.

The petition satisfies the requirements of 37 CFR 1.137(b) in that petitioner has supplied (1) the reply in the form of a Request for Continued Examination (RCE) and fee of $810 and the submission required by 37 CFR 1.114; (2) the petition fee of $1620; and (3) a proper statement of unintentional delay.

Telephone inquiries concerning this decision should be directed to the undersigned at (571) 272-3210.

This application is being referred to Technology Center AU 1797 for processing of the RCE and for appropriate action by the Examiner in the normal course of business on the amendment submitted in accordance with 37 CFR 1.114.

Irvin Dingle
Petition Examiner
Office of Petitions

UNITED STATES PATENT AND TRADEMARK OFFICE

Commissioner for Patents
United States Patent and Trademark Office
P.O. Box 1450
Alexandria, VA 22313-1450
www.uspto.gov

MAILED

DEC 17 2004

Director's Office
Group 3700

John L. Loth
P.O. Box 4094
Morgantown, WV 26504

In re application of John L. Loth	: :	**DECISION ON PETITION** **TO MAKE SPECIAL**
	:	**UNDER 37 CFR. 1.102(c)**
Serial Number: 10/793583 Filed: March 04, 2004	: :	

For: **COMPRESSION IGNITION ENGINE BY AIR INJECTION FROM AIR-ONLY**

This is a decision on the petition filed on March 04, 2004, under 37 CFR. 1.102(c) to make special the above identified application because of the age/health of the applicant. Since the requirements of the M.P.E.P Section 708.02 IV have been met, the petition will be GRANTED.

The examiner is directed (1) to make an interference search for possible interfering applications, (2) to promptly examine this application out of turn, and (3) if any interfering application is discovered, to examine such application simultaneously and state in the first official letter of such application that it is being taken out of turn because of a possible interference.

Petitioner is advised that this application will continue to be special, throughout its entire prosecution and pendency, including interference or appeal, if any, only is Petitioner makes a prompt bona-fide effort, in response to each Office action, to place the application in condition for allowance, even if it is necessary to conduct an interview with the Examiner to accomplish this purpose.

Summary: Decision on Petition **GRANTED**.

Richard A. Bertsch
Director
Technology Center 3700
(571) 272-3750

rt: 12/16/04

UNITED STATES PATENT AND TRADEMARK OFFICE

Commissioner for Patents
United States Patent and Trademark Office
P.O. Box 1450
Alexandria, VA 22313-1450
www.uspto.gov

MACHETTA LAW FIRM, P.C.
14614 FALLING CREEK DRIVE
SUITE 125
HOUSTON, TX 77068

COPY MAILED

MAR 0 3 2006

OFFICE OF PETITIONS

In re Application of	:	
Chan, Jack Sing Chiow	:	DECISION ON PETITION
Application No. 10/793,598	:	TO WITHDRAW
Filed: March 4, 2004	:	FROM RECORD
Attorney Docket No. CHAN-1/US	:	

This is a decision on the request to withdraw as attorney of record under 37 C.F.R. § 1.36, filed January 11, 2005.

The request is **NOT APPROVED**.

On November 23, 2005, a Revocation of Power of Attorney was submitted by the inventor. Unlike a Request for Withdrawal as Attorney, a Revocation of the Power of Attorney becomes effective on the date that the revocation is *received* in the Office, not on the date of *acceptance*. In view of the submission, the instant request is moot and not approved.

The correspondence address of record has been changed to the address listed below.

Telephone inquires concerning this decision should be directed to Petitions Examiner Liana Chase at (571) 272-3206. All other inquiries should be directed to the Technology Center.

David Bucci
Petitions Examiner
Office of Petitions

Cc: HUGH R. KRESS; BROWNING BUSHMAN P.C.
5718 WESTHEIMER
SUITE 1800
HOUSTON, TX 77057

UNITED STATES PATENT AND TRADEMARK OFFICE

COMMISSIONER FOR PATENTS
UNITED STATES PATENT AND TRADEMARK OFFICE
P.O. BOX 1450
ALEXANDRIA, VA 22313-1450
www.uspto.gov

JJGJR.: 03-05

Paper No: __

VERIZON CORPORATE
SERVICES GROUP INC.
600 HIDDEN RIDGE DRIVE
MAILCODE HQE03H14
IRVING, TX 75038

COPY MAILED

MAR 1 6 2005

OFFICE OF PETITIONS

In re Application of :
Elliott :
Application No. 10/793,606 :
Filing Date: 4 March, 2004 :
Attorney Docket No. 03-4022 :

This is a decision on the petition filed on 24 February, 2005, to revive the instant application under 37 C.F.R. §1.137(b) as having been abandoned due to unintentional delay.

For the reasons set forth below, the petition under 37 C.F.R. §1.137(b) **GRANTED**.

BACKGROUND

The record reflects that:

- Petitioner failed to reply timely and properly to the Notice to File Missing Parts (oath/declaration, fees) mailed on 25 May, 2004, with reply due absent extension of time on or before Monday, 26 July, 2004;
- the Application went abandoned after midnight 25 July, 2004;
- the Office mailed a Notice of Abandonment on 14 February, 2005;
- the instant petition was filed with fee, and statement of unintentional delay on 24 February, 2005, along with the reply to the Notice of Missing Parts (oath/declaration and fees).

STATUTES, REGULATIONS AND ANALYSIS

Congress has authorized the Commissioner to "revive an application if the delay is shown to the satisfaction of the Commissioner to have been "unavoidable." 35 U.S.C. §133 (1994).[1]

The regulations at 37 C.F.R. §1.137(a) and (b) set forth the requirements for a petitioner to revive a previously unavoidably or unintentionally, respectively, abandoned application under this congressional grant of authority. The language of 35 U.S.C. §133 and 37 C.F.R. §1.137(a) is clear, unambiguous, and without qualification: the delay in tendering the reply to the outstanding Office action, as well as filing the first petition seeking revival, must have been unavoidable for the reply now to be accepted on petition.[2]

Delays in responding properly raise the question whether delays are unavoidable.[3] Where there is a question whether the delay was unavoidable, Petitioners must meet the burden of establishing that the delay was unavoidable within the meaning of 35 U.S.C. §133 and 37 C.F.R. §1.137(a).[4] And the Petitioner must be diligent in attending to the matter.[5] Failure to do so does not constitute the care required under Pratt, and so cannot satisfy the test for diligence and due care.

(By contrast, unintentional delays are those that do not satisfy the very strict statutory and regulatory requirements of unavoidable delay, and also, by definition, are not intentional.[6]))

Allegations as to Unintentional Delay

A grantable petition under 37 C.F.R. §1.137(b) requires a petition, fee, statement of unintentional delay, reply, and a terminal disclaimer and fee if appropriate.

---

[1] 35 U.S.C. §133 provides:
35 U.S.C. §133 Time for prosecuting application.
Upon failure of the applicant to prosecute the application within six months after any action therein, of which notice has been given or mailed to the applicant, or within such shorter time, not less than thirty days, as fixed by the Commissioner in such action, the application shall be regarded as abandoned by the parties thereto, unless it be shown to the satisfaction of the Commissioner that such delay was unavoidable.

[2] Therefore, by example, an unavoidable delay in the payment of the Filing Fee might occur if a reply is shipped by the US Postal Service, but due to catastrophic accident, the delivery is not made.

[3] See: *Changes to Patent Practice and Procedure; Final Rule Notice*, 62 *Fed. Reg.* at 53158-59 (October 10, 1997), 1203 *Off. Gaz. Pat. Office* at 86-87 (October 21, 1997).

[4] See: In re Application of G, 11 USPQ2d 1378, 1380 (Comm'r Pats. 1989).

[5] See: Diligence in Filing Petitions to Revive and Petitions to Withdraw the Holding of Abandonment, 1124 Off. Gaz. Pat. Office 33 (March 19, 1991). It was and is Petitioner's burden to exercise diligence in seeking either to have the holding of abandonment withdrawn or the application revived. See 1124 Off. Gaz. Pat. Office supra.

[6] Therefore, by example, an unintentional delay in the reply might occur if the reply and transmittal form are to be prepared for shipment by the US Postal Service, but other pressing matters distract one's attention and the mail is not timely deposited for shipment.

As indicated above, Petitioner has satisfied the regulatory requirements.

CONCLUSION

The petition under 37 C.F.R. §1.137(b) is **granted**, and the surcharge for late filing (oath/declaration) ($130.00) and the petition fee ($1,500.00) are charged as authorized to Deposit Account 07-2347.

The instant application is released to OIPE for further processing before being forwarded for examination in due course.

Telephone inquiries concerning this decision may be directed to the undersigned at (571) 272-3214.

John J. Gillon, Jr.
Senior Attorney
Office of Petitions

UNITED STATES PATENT AND TRADEMARK OFFICE

Commissioner for Patents
United States Patent and Trademark Office
P.O. Box 1450
Alexandria, VA 22313-1450
www.uspto.gov

Paper No.

Richard W. Goldstein
2071 Clove Road
Staten Island, NY 10304

COPY MAILED

MAY 15 2006

OFFICE OF PETITIONS

In re Application of	:	
Larry Pennington	:	DECISION ON
Application No. 10/793,608	:	PETITION
Filed: March 4, 2004	:	
Atty Docket No. 95950	:	

This is a decision on the PETITION FOR REVIVAL OF AN APPLICATION FOR PATENT ABANDONED UNINTENTIONALLY UNDER 37 CFR 1.137(b), filed April 4, 2006.

The petition is **GRANTED**.

The above-identified application became abandoned for failure to pay the Issue Fee within three months of the mailing date, December 5, 2005, of the Notice of Allowance and Fee(s) Due. This Office action set a three-month nonextendable statutory period for reply. No reply having been received, the above-identified application became abandoned on March 6, 2006. The instant petition precedes the mailing of a courtesy Notice of Abandonment.

The petition included required reply[1] in the form of payment of the Issue Fee; payment of the petition fee set forth in 37 CFR § 1.17(m); and the required statement of unintentional delay. No terminal disclaimer is required.

The Office of Patent Publication has been advised of this decision. The application is, thereby, forwarded to the Publication Division for processing into a patent.

[1] There was no distinct but concurrent requirement for new drawings or payment of a Publication Fee.

Telephone inquiries related to this decision should be directed to the undersigned at (571) 272-3219.

Nancy Johnson
Senior Petitions Attorney
Office of Petitions

SPE RESPONSE FOR CERTIFICATE OF CORRECTION

Paper No.:20061115

DATE : November 15, 2006

TO SPE OF : ART UNIT 1712

SUBJECT : Request for Certificate of Correction on Patent No.: 7,119,143

A response is requested with respect to the accompanying request for a certificate of correction.

Please complete this form and return with file, within **7** days to:
Certificates of Correction Branch - PK 3-910
Palm location **7590** - Tel. No. 305-8201

With respect to the change(s) requested, correcting Office and/or Applicant's errors, should the patent read as shown in the certificate of correction? No new matter should be introduced, nor should the scope or meaning of the claims be changed.

Thank You For Your Assistance **Certificates of Correction Branch**

The request for issuing the above-identified correction(s) is hereby:
Note your decision on the appropriate box.

☒ **Approved** **All** changes apply.

☐ **Approved in Part** Specify below which changes **do not** apply.

☐ **Denied** State the reasons for denial below.

Comments:

SPE: Randy Gulakowski **Art Unit** 1712

UNITED STATES PATENT AND TRADEMARK OFFICE

Commissioner for Patents
United States Patent and Trademark Office
P.O. Box 1450
Alexandria, VA 22313-1450
www.uspto.gov
DIW 08-04

PEARNE & GORDON LLP
1801 EAST 9TH STREET
SUITE 1200
CLEVELAND OH 44114-3108

COPY MAILED

AUG 2 0 2004

OFFICE OF PETITIONS

In re Application of	:
MacNeal et al.	:
Application No. 10/793,616	: DECISION ON PETITION
Filed: 4 March, 2004	:
Attorney Docket No. GAS 35209US1	:

This is a decision on in reference to the papers filed on 9 July, 2004, which are treated as a petition requesting that above-identified application, including Figure 9 described in the specification, be accorded a filing date of 4 March, 2004.

The petition is granted.

On 4 March, 2004, the application was filed. On 25 May, 2004, Initial Patent Examination Division mailed a Notice to File Missing Parts of Nonprovisional Application stating, *inter alia*, that Figure 9 described in the specification appeared to have been omitted.

In response, on 9 July, 2004, the present petition and a copy of one (1) sheet of drawings sheet containing Figure 9, was filed. Petitioner argues that the drawing sheet containing Figure 9 was filed with the other application papers on 4 March, 2004, but was subsequently misplaced in the U.S. Patent and Trademark Office (Office). In support, a copy of petitioner's postcard receipt was supplied with the present petition. The postcard receipt shows an Office date stamp of 03/04/04, the above-identified application number, and identifies the application by the first-named inventor's name and invention title, and acknowledges receipt of, *inter alia*, "7 sheet(s) of Drawing(s)". Petitioners requests that the application, including the drawing sheet containing Figure 9 described in the specification, be accorded a filing date of 4 March, 2004.

A review of the record reveals that six (6) sheets of drawings containing Figures 1-8 were received on 4 March, 2004. No sheet of drawings containing Figure 8 has been located among the application papers received on 4 March, 2004. However, the evidence is convincing that the application papers deposited on 4 March, 2004, included one (1) sheet of drawings containing Figure 9 described in the specification, which was subsequently misplaced in the Office. Therefore, the application, including one (1) sheet of drawings containing Figure 8, is entitled to a filing date of 4 March, 2004.

In view of the above, the petition is granted to the extent indicated. The petition fee of $130.00 will be credited to counsel's deposit account, No. 16-0820.

The application will be processed with the copy of the sheet of drawings containing Figure 9 supplied on 9 July, 2004, as a part of the original disclosure.

The application is being returned to Initial Patent Examination Division for further processing with a filing date of 4 March, 2004, using the application papers filed on that date, and the copy of one sheet of drawings containing Figure 9 described in the specification supplied with the present petition.

Telephone inquiries should be directed to the undersigned at 703-308-6918.

D Wood

Douglas I. Wood
Senior Petitions Attorney
Office of Petitions

UNITED STATES PATENT AND TRADEMARK OFFICE

COMMISSIONER FOR PATENTS
UNITED STATES PATENT AND TRADEMARK OFFICE
P.O. BOX 1450
ALEXANDRIA, VA 22313-1450
www.uspto.gov

FARJAMI & FARJAMI LLP
26522 LA ALAMEDA AVENUE, SUITE 360
MISSION VIEJO ,CA 92691

COPY MAILED

APR 27 2006

OFFICE OF PETITIONS

In re Application of :
Warren, et al. : DECISION ON PETITION
Application No. 10/793,618 :
For: March 4, 2004 :
Atty. Dkt. No.: 0140112 :

This is a decision on the petitions under 37 CFR 1.137(a) and 37 CFR 1.181, filed March 23, 2006.

This application became abandoned December 9, 2005 for failure to timely file a proper reply to the final Office action mailed September 8, 2005. The final Office action set a three (3) month shortened statutory period of time for reply. An amendment after final rejection was submitted November 21, 2005, but failed to place the application in condition for allowance, as indicated in the Advisory Action mailed March 8, 2006. This decision precedes Notice of Abandonment.

The petition under 37 CFR 1.137(a) is hereby **DISMISSED**.

The petition under 37 CFR 1.181 is hereby **DISMISSED**.

A grantable petition under 37 CFR 1.137(a) must be accompanied by: (1) the required reply, unless previously filed; (2) the petition fee as set forth in 37 CFR 1.17(l); (3) a showing to the satisfaction of the Commissioner that the entire delay in filing the required reply from the due date for the reply until the filing of a grantable petition pursuant to 37 CFR 1.137(a) was unavoidable; and (4) any terminal disclaimer (and fee as set forth in 37 CFR 1.20(d)) required pursuant to 37 CFR 1.137(c).

The instant petition fails to satisfy requirement (3) set forth above. Petitioners have failed to present a showing to the satisfaction of the Director that the entire delay in filing the required reply from the due date for the reply until the filing of a grantable petition pursuant to 37 CFR 1.137(a) was unavoidable.

The Office may revive an abandoned application if the delay in responding to the relevant outstanding Office requirement is

shown to the satisfaction of the Commissioner to have been "unavoidable." See, 37 CFR 1.137(a)(3). Decisions on reviving abandoned applications have adopted the reasonably prudent person standard in determining if the delay was unavoidable. Ex parte Pratt, 1887 Dec. Comm'r Pat. 31, 32-33 (Comm'r Pat. 1887)(the term "unavoidable" "is applicable to ordinary human affairs, and requires no more or greater care or diligence than is generally used and observed by prudent and careful men in relation to their most important business"); In re Mattullath, 38 App. D.C. 497, 514-15 (D.C. Cir. 1912); Ex parte Henrich, 1913 Dec. Comm'r Pat. 139, 141 (Comm'r Pat. 1913). In addition, decisions on revival are made on a "case-by-case basis, taking all the facts and circumstances into account." Smith v. Mossinghoff, 671 F.2d 533, 538, 213 USPQ 977, 982 (D.C. Cir. 1982). A petition to revive an application as unavoidably abandoned cannot be granted where petitioner has failed to meet his or her burden of establishing the cause of the unavoidable delay. Haines v. Quigg, 673 F. Supp. 314, 5 USPQ2d 1130 (N.D. Ind. 1987).

Petitioners attribute the abandonment of the instant application to failure to receive an Advisory Action in sufficient time to submit an additional response to the final Office action mailed September 8, 2005.

Petitioners' arguments have been considered but are not found persuasive. Petitioners were informed in the final Office action and the Advisory Action that the statutory time period for reply could not be extended beyond six months from the mail date of the final Office action. Pursuant to 37 CFR 1.116 (b), the admission of, or refusal to admit, any amendment after a final rejection, a final action, an action closing prosecution, or any related proceedings will not operate to relieve the application or patent under reexamination from its condition as subject to appeal or to save the application from abandonment under § 1.135, or the reexamination from termination.

Furthermore, petitioners' receipt of the advisory action after the statutory period of time for reply expired does not demonstrate that petitioners' failure to prosecute the application was due to unavoidable delay. The final Office action advised petitioners that the maximum statutory extendable period of time for reply was six months from the mail date of the final Office action. The fact the advisory action was received after the six month statutory period of time for reply

does not warrant petitioners gaining additional time or a resetting of the period to reply to the final Office action. *See* MPEP 706.07.

Accordingly, the showing of record is not sufficient to establish to the satisfaction of the Director that the delay was unavoidable within the meaning of 35 U.S.C. § 151 and 37 CFR § 1.137(a) or warrant the withdrawal of the holding of abandonment under 37 CFR 1.181.

ALTERNATE VENUE

Petitioner is strongly urged to consider filing a petition stating that the entire delay was unintentional. Petitioner's attention is directed to 37 CFR 1.137(b) which provides for the revival of an "unintentionally" abandoned application without a showing that the delay in prosecution or in late payment of an issue fee was "unavoidable". An "unintentional" petition under 37 CFR 1.137(b) must be accompanied by the required petition fee and reply.

The filing of a petition under 37 CFR 1.137(b) cannot be intentionally delayed and therefore must be filed promptly. A person seeking revival due to unintentional delay cannot make a statement that the delay was unintentional unless the entire delay, including the delay from the date it was discovered that the application was abandoned until the filing of the petition to revive under 37 CFR 1.137(b), was unintentional. A statement that the delay was unintentional is not appropriate if petitioner intentionally delayed the filing of a petition for revival under 37 CFR 1.137(b). *See*, enclosure.

Any request for reconsideration of this decision must be submitted within **TWO (2) MONTHS** from mail date of this decision. Extensions of time under 37 CFR 1.136(a) are permitted. The reconsideration request should include a cover letter entitled "Renewed Petition under 37 CFR 1.137(a)." This is not a final agency decision.

Further correspondence with respect to this matter should be addressed as follows:

By mail: Mail Stop Petition
Commissioner for Patents
P.O. Box 1450

Alexandria, VA 22313-1450

By facsimile: (571) 273-8300

By hand: U.S. Patent and Trademark Office
Customer Window
Mail Stop Petition
Randolph Building
Dulany Street
Alexandria, VA 22314

Telephone inquiries concerning this matter may be directed to the undersigned at (571) 272-3205.

Alesia M. Brown
Petitions Attorney
Office of Petitions

UNITED STATES PATENT AND TRADEMARK OFFICE

COMMISSIONER FOR PATENTS
UNITED STATES PATENT AND TRADEMARK OFFICE
P.O. BOX 1450
ALEXANDRIA, VA 22313-1450
www.uspto.gov

COPY MAILED
MAY 26 2006
OFFICE OF PETITIONS

FARJAMI & FARJAMI LLP
26522 LA ALAMEDA AVENUE, SUITE 360
MISSION VIEJO, CA 92691

In re Application of :
Warren, et al. : DECISION ON PETITION
Application No. 10/793,618 :
For: March 4, 2004 :
Atty. Dkt. No.: 0140112 :

This is a decision on the petition under 37 CFR 1.137(b), filed March 23, 2006.

This application became abandoned December 9, 2005 for failure to timely file a proper reply to the final Office action mailed September 8, 2005. The final Office action set a three (3) month shortened statutory period of time for reply. An amendment after final rejection was submitted November 21, 2005, but failed to place the application in condition for allowance, as indicated in the Advisory Action mailed March 8, 2006. This decision precedes Notice of Abandonment. A decision dismissing petitions under 37 CFR 1.137(a) and 1.181 was mailed April 27, 2006.

The petition under 37 CFR 1.137(b) is hereby **GRANTED**.

A grantable petition under 37 CFR 1.137(b) must be accompanied by: (1) the required reply, unless previously filed; (2) the petition fee as set forth in 37 CFR 1.17(l); (3) a showing to the satisfaction of the Director that the entire delay in filing the required reply from the due date for the reply until the filing of a grantable petition pursuant to 37 CFR 1.137(b) was unintentional; and (4) any terminal disclaimer (and fee as set forth in 37 CFR 1.20(d)) required pursuant to 37 CFR 1.137(c).

This instant petition has been reviewed and found in compliance with the provisions of 37 CFR 1.137(b). Accordingly, the failure to timely submit a proper reply to the final Office action is accepted as having been unintentionally delayed.

This application is being directed to Technology Center 2800 for consideration of the Request for Continued Examination.

Telephone inquiries concerning this matter may be directed to the undersigned at (571) 272-3205.

Alesia M. Brown
Petitions Attorney
Office of Petitions

UNITED STATES PATENT AND TRADEMARK OFFICE

Commissioner for Patents
United States Patent and Trademark Office
P.O. Box 1450
Alexandria, VA 22313-1450
www.uspto.gov

COPY MAILED

MAR 1 0 2005

OFFICE OF PETITIONS

BINGHAM, MCCUTCHEN LLP
THREE EMBARCADERO CENTER
18 FLOOR
SAN FRANCISCO, CA 94111-4067

In re Application of	:	
Miller and Johnson	:	
Application No.10/793,619	:	DECISION GRANTING PETITION
Filed: March 4, 2004	:	
Attorney Docket No. 703643001-3217338	:	

This is a decision on the petition filed January 14, 2005, requesting correction of the priority data for the above-cited application.

On March 4, 2004, the above-identified application was filed. The specification for the subject application included the following in the first paragraph of the specification.

> This application claims priority to United States Provisional Application Number 60/379,480 filed on May 10, 2002, PCT Application Serial No.: PCT/US02/34800 filed on October 30, 2002 and is a continuation in part of US Utility Application Number 10/481,306 filed on December 17, 2003, which are commonly-owned and incorporated herein in their entireties by reference.

Petitioner states that the filing receipt received did not include the priority data. Petitioner made repeated requests for a corrected filing receipt reflecting the priority data. The Office of Initial Patent Examination did not grant these requests indicating that priority data could not be added after the application is filed.

It appears that the priority data cited above was missed during the initial review of the application papers, and because the priority claim was present on filing, petitions under 37 CFR 1.78(a)(3) or (a)(6) are not appropriate. The petition is, therefore, granted under 37 CFR 1.182 and a corrected filing receipt reflecting the priority data found on the first page of specification is enclosed. The petition fee of $400.00 will be credited to deposit account 50-2518.

The granting of this petition should not be construed as meaning the instant application is entitled to the benefit of the prior-filed applications. In order for the instant application to be entitled to the benefit of the prior-filed applications, all other requirements under 35 U.S.C. § 120 and 37 CFR 1.78(a)(1) and (a)(2) and 35 U.S.C. § 119(e) and 37 CFR 1.78(a)(4) and (a)(5) must be met. Similarly, the fact that the corrected Filing Receipt accompanying this decision on petition includes the prior-filed application should not be construed as meaning that applicant is entitled to the claim for benefit of priority to the prior-filed applications noted thereon. Accordingly, the examiner will, in due course, consider this benefit claim and determine whether the instant application is entitled to the benefit of the earlier filing date.

The application file is being directed to Technology Center 2800, GAU 2841 for further processing.

Any inquiries related to this decision should be directed to the undersigned at (571) 272-3222.

Kenya A. McLaughlin
Petitions Attorney
Office of Petitions

Enclosure: Corrected Filing Receipt

UNITED STATES PATENT AND TRADEMARK OFFICE

Commissioner for Patents
United States Patent and Trademark Office
P.O. Box 1450
Alexandria, VA 22313-1450
www.uspto.gov

Hamilton, Brook, Smith & Reynolds, P.C.
530 Virginia Road
P.O. Box 9133
Concord, MA 01742-9133

COPY MAILED

AUG 0 3 2006

OFFICE OF PETITIONS

In re Application of	:	
Ju-Hyeon Lee	:	
Application No. 10/793,645	:	DECISION ON PETITION
Filed: March 3, 2004	:	TO WITHDRAW
Attorney Docket No. 3699.1000-000	:	FROM RECORD
	:	

This is a decision on the Request to Withdraw as attorney or agent of record under 37 C.F.R. § 1.36(b), filed February 13, 2006.

The request is **APPROVED**.

A grantable request to withdraw as attorney/agent of record must be signed by every attorney/agent seeking to withdraw or contain a clear indication that one attorney is signing on behalf of another/others. A request to withdraw will not be approved unless at least 30 (thirty) days would remain between the date of approval and the later of the expiration date of a time to file a response or the expiration date of the maximum time period which can be extended under 37 C.F.R. § 1.136(a).

The request was signed by MaryLou Wakimura on behalf of all attorneys of record who are associated with Customer No. 021005.

All attorneys/agents associated with the Customer No. 021005 have been withdrawn.

Applicant is reminded that there is no attorney of record at this time.

The request to change the correspondence of record is not acceptable as the requested correspondence address is not that of: (1) the first named signing inventor; or (2) an intervening assignee of the entire interest under 37 C.F.R 3.71. All future communications from the Office will be directed to the first named signing inventor or the assignee of the entire interest at the first copied address below until otherwise properly notified by the applicant.

There is no outstanding Office action at this time.

There is an outstanding Office action mailed January 25, 2005 that requires a reply from the applicant.

Telephone inquiries concerning this decision should be directed to Terri Williams at 571-272-2991.

for David Bucci
Petitions Examiner
Office of Petitions

cc: Ju-Hyeon Lee
6-305 Kyongnam, Apt. 649
Gaepo-dong, Gangnam-gu
Seoul, 135-240
Republic of Korea

cc: Sheridan Ross PC
1560 Broadway
Suite 1200
Denver, CO 80202

UNITED STATES PATENT AND TRADEMARK OFFICE

Commissioner for Patents
United States Patent and Trademark Office
P.O. Box 1450
Alexandria, VA 22313-1450
www.uspto.gov

MAILED

JUL 15 2010

OFFICE OF PETITIONS

LANDO & ANASTASI, LLP
ONE MAIN STREET, SUITE 1100
CAMBRIDGE MA 02142

In re Patent of Herrmann et al.	:	DECISION ON REQUEST
Patent No. 7,623,844	:	FOR RECONSIDERATION OF
Issue Date: November 24, 2009	:	PATENT TERM ADJUSTMENT
Application No. 10/793,656	:	and
Filed: March 4, 2004	:	NOTICE OF INTENT TO ISSUE
Atty. Docket No. R0586-700310	:	CERTIFICATE OF CORRECTION

This is a decision on the petition filed on January 25, 2010, which is being treated as a petition under 37 CFR 1.705(d) requesting that the patent term adjustment indicated on the above-identified patent be corrected to indicate that the term of the above-identified patent is extended or adjusted by seven hundred sixty-one (761) days.

The petition to correct the patent term adjustment indicated on the above-identified patent to indicate that the term of the above-identified patent is extended or adjusted by one thousand seven hundred sixty-one (761) days is **GRANTED**.

The Office acknowledges submission of the $200.00 fee set forth in 37 CFR 1.18(e). No additional fees are required.

The application is being forwarded to the Certificates of Correction Branch for issuance of a certificate of correction. The Office will issue a certificate of correction indicating that the term of the above-identified patent is extended or adjusted by **seven hundred sixty-one (761)** days.

Telephone inquiries specific to this decision should be directed to the undersigned at (571) 272-3230.

Shirene Willis Brantley
Senior Petitions Attorney
Office of Petitions

Enclosure: Copy of DRAFT Certificate of Correction

UNITED STATES PATENT AND TRADEMARK OFFICE

CERTIFICATE OF CORRECTION

PATENT : 7,623,844 B2

DATED : **November 24, 2009** **DRAFT**

INVENTOR(S) : Herrmann et al.

It is certified that error appears in the above-identified patent and that said Letters Patent is hereby corrected as shown below:

On the cover page,

[*] Notice: Subject to any disclaimer, the term of this patent is extended or adjusted under 35 U.S.C. 154(b) by 533 days

Delete the phrase "by 533 days" and insert – by 761 days--

UNITED STATES PATENT AND TRADEMARK OFFICE

Commissioner for Patents
United States Patent and Trademark Office
P.O. Box 1450
Alexandria, VA 22313-1450
www.uspto.gov

COPY MAILED

JAN 09 2007

OFFICE OF PETITIONS

OSHA LIANG L.L.P.
1221 MCKINNEY ST., SUITE 2800
HOUSTON TX 77010

In re Application of :
Takehiro Onomatsu :
Application No. 10/793,664 : ON PETITION
Filed: March 4, 2004 :
Attorney Docket No. 04995/139001 :

This is a decision on the petition, filed January 4, 2007, and supplemented on January 5, 2007 under 37 CFR 1.313(c)(2) to withdraw the above-identified application from issue after payment of the issue fee.

The petition is **GRANTED.**

The above-identified application is withdrawn from issue for consideration of a submission under 37 CFR 1.114 (request for continued examination). See 37 CFR 1.313(c)(2).

Petitioner is advised that the issue fee paid on December 8, 2006[1] in the above-identified application cannot be refunded. If, however, the above-identified application is again allowed, petitioner may request that it be applied towards the issue fee required by the new Notice of Allowance.[2]

Telephone inquiries should be directed to the undersigned at (571) 272-3208.

---

[1]The Office records show no receipt of the issue fee payment on December 8, 2006 as stated in the petition on January 4, 2007. However, from the evidence submitted on January 5, 2007, it is clear that the issue fee was indeed timely submitted on December 8, 2006.

[2] The request to apply the issue fee to the new Notice may be satisfied by completing and returning the new Issue Fee Transmittal Form PTOL-85(b), which includes the following language thereon: "Commissioner for Patents is requested to apply the Issue Fee and Publication Fee (if any) or re-apply any previously paid issue fee to the application identified above." Petitioner is advised that, whether a fee is indicated as being due or not, the Issue Fee Transmittal Form **must** be completed and timely submitted to avoid abandonment. Note the language in bold text on the first page of the Notice of Allowance and Fee(s) Due (PTOL-85).

The examiner of Technology Center AU 2622 will consider the request for continued examination under 37 CFR 1.114.

Karen Creasy

Karen Creasy
Petitions Examiner
Office of Petitions

UNITED STATES PATENT AND TRADEMARK OFFICE

COMMISSIONER FOR PATENTS
UNITED STATES PATENT AND TRADEMARK OFFICE
P.O. BOX 1450
ALEXANDRIA, VA 22313-1450
WWW.USPTO.GOV

Paper No. None

FLEIT KAIN GIBBONS GUTMAN BONGINI & BIANCO
21355 EAST DIXIE HIGHWAY
SUITE 115
MIAMI FL 33180

COPY MAILED
OCT 0 2 2006
OFFICE OF PETITIONS

In re Application of Werner Bartling et al. Application No. 10/793,668 Patent No. 6,938,935 Filing Date: March 3, 2004 Issue Date: September 6, 2005 Attorney Docket Number: 7590-X04-005 Title: METERING DEVICE FOR SAND SPREADING DEVICES, ESPECIALLY FOR RAIL VEHICLES	DECISION ON PETITION UNDER 37 C.F.R. § 1.183

Background

This is a decision on the petition filed on March 10, 2006, which is properly treated as a petition pursuant to 37 C.F.R. § 1.183, requesting that 37 C.F.R. §1.55(c) be waived so that Petitioner may claim priority to a foreign application even though a copy of the foreign reference has never been provided to the Office.

In short, Petitioner failed to provide the Office with a certified copy of the foreign application. Consequently, the patent issued, and priority to the foreign application was not established. Petitioner now wishes to have the Office recognize priority to the foreign application, without having to file a reissue application.

The application was filed on March 3, 2004 and issued as U.S. patent number 6,938,935 on September 6, 2005. Priority to a foreign application is asserted on the declaration which was

provided subsequent to filing on August 20, 2004, however it does not appear that Petitioner ever supplied a copy of this foreign reference prior to the issuance of this patent, as required by 37 C.F.R. §1.55(a)(2). Consequently, the present patent is not entitled to claim priority to the foreign application.

Petitioner filed a request for certificate of correction on January 4, 2006, which was dismissed via the mailing of a decision by the Certificates of Correction Branch on January 20, 2006.

With the present petition, Petitioner has submitted a portion of the fee associated with the filing of a petition under 37 C.F.R. §1.183, the remainder of which has been charged to his Deposit Account, as authorized in the petition. Petitioner has asserted that he does not need to file a reissue application to correct this defect, and that a certificate of correction should be issued to grant this application priority to the foreign application.

It is noted that Petitioner has failed to provide a copy of the foreign reference with the present petition.

A discussion follows.

Applicable Law and Rules

35 U.S.C. 119 sets forth, *in toto*:

(a) An application for patent for an invention filed in this country by any person who has, or whose legal representatives or assigns have, previously regularly filed an application for a patent for the same invention in a foreign country which affords similar privileges in the case of applications filed in the United States or to citizens of the United States, or in a WTO member country, shall have the same effect as the same application would have if filed in this country on the date on which the application for patent for the same invention was first filed in such foreign country, if the application in this country is filed within twelve months from the earliest date on which such foreign application was filed; but no patent shall be granted on any application for patent for an invention which had been patented or described in a printed publication in any country more than one year before the date of the actual filing of the application in this country, or which had been in public use or on sale in this country more than one year prior to such filing.
(b)
(1) No application for patent shall be entitled to this right of priority unless a claim is filed in the Patent and Trademark Office, identifying the foreign application by specifying the application number on that foreign application, the intellectual property authority or country in or for which the application was filed, and the date of filing the application, at such time during the pendency of the application as required by the Director.

(2) The Director may consider the failure of the applicant to file a timely claim for priority as a waiver of any such claim. The Director may establish procedures, including the payment of a surcharge, to accept an unintentionally delayed claim under this section.
(3) The Director may require a certified copy of the original foreign application, specification, and drawings upon which it is based, a translation if not in the English language, and such other information as the Director considers necessary. Any such certification shall be made by the foreign intellectual property authority in which the foreign application was filed and show the date of the application and of the filing of the specification and other papers.
(c) In like manner and subject to the same conditions and requirements, the right provided in this section may be based upon a subsequent regularly filed application in the same foreign country instead of the first filed foreign application, provided that any foreign application filed prior to such subsequent application has been withdrawn, abandoned, or otherwise disposed of, without having been laid open to public inspection and without leaving any rights outstanding, and has not served, nor thereafter shall serve, as a basis for claiming a right of priority.
(d) Applications for inventors' certificates filed in a foreign country in which applicants have a right to apply, at their discretion, either for a patent or for an inventor's certificate shall be treated in this country in the same manner and have the same effect for purpose of the right of priority under this section as applications for patents, subject to the same conditions and requirements of this section as apply to applications for patents, provided such applicants are entitled to the benefits of the Stockholm Revision of the Paris Convention at the time of such filing.
(e)
(1) An application for patent filed under section 111(a) or section 363 of this title for an invention disclosed in the manner provided by the first paragraph of section 112 of this title in a provisional application filed under section 111(b) of this title, by an inventor or inventors named in the provisional application, shall have the same effect, as to such invention, as though filed on the date of the provisional application filed under section 111(b) of this title, if the application for patent filed under section 111(a) or section 363 of this title is filed not later than 12 months after the date on which the provisional application was filed and if it contains or is amended to contain a specific reference to the provisional application. No application shall be entitled to the benefit of an earlier filed provisional application under this subsection unless an amendment containing the specific reference to the earlier filed provisional application is submitted at such time during the pendency of the application as required by the Director. The Director may consider the failure to submit such an amendment within that time period as a waiver of any benefit under this subsection. The Director may establish procedures, including the payment of a surcharge, to accept an unintentionally delayed submission of an amendment under this subsection during the pendency of the application
(2) A provisional application filed under section 111(b) of this title may not be relied upon in any proceeding in the Patent and Trademark Office unless the fee set forth in subparagraph (A) or (C) of section 41(a)(1) of this title has been paid.
(3) If the day that is 12 months after the filing date of a provisional application falls on a Saturday, Sunday, or Federal holiday within the District of Columbia, the period of pendency of the provisional application shall be extended to the next succeeding secular or business day.

(f) Applications for plant breeder's rights filed in a WTO member country (or in a foreign UPOV Contracting Party) shall have the same effect for the purpose of the right of priority under subsections (a) through (c) of this section as applications for patents, subject to the same conditions and requirements of this section as apply to applications for patents.
(g) As used in this section-
(1) the term "WTO member country" has the same meaning as the term is defined in section 104(b)(2) of this title; and
(2) the term "UPOV Contracting Party" means a member of the International Convention for the Protection of New Varieties of Plants.
(Amended Oct. 3, 1961, Public Law 87-333, sec. 1, 75 Stat. 748; July 28, 1972, Public Law 92-358, sec. 1, 86 Stat. 501; Jan. 2, 1975, Public Law 93-596, sec. 1, 88 Stat. 1949; Dec. 8, 1994, Public Law 103-465, sec. 532(b)(1), 108 Stat. 4985.)
(Subsection (b) amended Nov. 29, 1999, Public Law 106-113, sec. 1000(a)(9), 113 Stat. 1501A-563 (S. 1948 sec.4503(a)).)
(Subsection (e) amended Nov. 29, 1999, Public Law 106-113, sec. 1000(a)(9), 113 Stat. 1501A-564, 588, 589 (S. 1948 secs. 4503(b)(2), 4801 and 4802).)
(Subsections (f) and (g) added Nov. 29, 1999, Public Law 106-113, sec. 1000(a)(9), 113 Stat. 1501A-589 (S. 1948 sec. 4802).)

37 C.F.R. §1.55 sets forth, *in toto*:

(a) An applicant in a nonprovisional application may claim the benefit of the filing date of one or more prior foreign applications under the conditions specified in 35 U.S.C. 119(a) through (d) and (f), 172, and 365(a) and (b).
(1)
(i) In an original application filed under 35 U.S.C. 111(a), the claim for priority must be presented during the pendency of the application, and within the later of four months from the actual filing date of the application or sixteen months from the filing date of the prior foreign application. This time period is not extendable. The claim must identify the foreign application for which priority is claimed, as well as any foreign application for the same subject matter and having a filing date before that of the application for which priority is claimed, by specifying the application number, country (or intellectual property authority), day, month, and year of its filing. The time periods in this paragraph do not apply in an application under 35 U.S.C. 111(a) if the application is:
(A) A design application; or
(B) An application filed before November 29, 2000.
(ii) In an application that entered the national stage from an international application after compliance with 35 U.S.C. 371, the claim for priority must be made during the pendency of the application and within the time limit set forth in the PCT and the Regulations under the PCT.
(2) The claim for priority and the certified copy of the foreign application specified in 35 U.S.C. 119(b) or PCT Rule 17 must, in any event, be filed before the patent is granted. If the claim for priority or the certified copy of the foreign application is filed after the date the issue fee is paid, it must be accompanied by the processing fee set forth in § 1.17(i), but the patent will not include the priority claim unless corrected by a certificate of correction under 35 U.S.C. 255 and § 1.323
(3) The Office may require that the claim for priority and the certified copy of the foreign application be filed earlier than provided in paragraphs (a)(1) or (a)(2) of this section:
(i) When the application becomes involved in an interference (see § 41.202 of this title),

(ii) When necessary to overcome the date of a reference relied upon by the examiner, or
(iii) When deemed necessary by the examiner.
(4)
(i) An English language translation of a non-English language foreign application is not required except:
(A) When the application is involved in an interference (see § 41.202 of this title),
(B) When necessary to overcome the date of a reference relied upon by the examiner, or
(C) When specifically required by the examiner.
(ii) If an English language translation is required, it must be filed together with a statement that the translation of the certified copy is accurate.
(b) An applicant in a nonprovisional application may under certain circumstances claim priority on the basis of one or more applications for an inventor's certificate in a country granting both inventor's certificates and patents. To claim the right of priority on the basis of an application for an inventor's certificate in such a country under 35 U.S.C. 119(d), the applicant when submitting a claim for such right as specified in paragraph (a) of this section, shall include an affidavit or declaration. The affidavit or declaration must include a specific statement that, upon an investigation, he or she is satisfied that to the best of his or her knowledge, the applicant, when filing the application for the inventor's certificate, had the option to file an application for either a patent or an inventor's certificate as to the subject matter of the identified claim or claims forming the basis for the claim of priority.
(c) Unless such claim is accepted in accordance with the provisions of this paragraph, any claim for priority under 35 U.S.C. 119(a)-(d) or 365(a) not presented within the time period provided by paragraph (a) of this section is considered to have been waived. If a claim for priority under 35 U.S.C. 119(a)-(d) or 365(a) is presented after the time period provided by paragraph (a) of this section, the claim may be accepted if the claim identifying the prior foreign application by specifying its application number, country (or intellectual property authority), and the day, month, and year of its filing was unintentionally delayed. A petition to accept a delayed claim for priority under 35 U.S.C. 119(a)-(d) or 365(a) must be accompanied by:
(1) The claim under 35 U.S.C. 119(a)-(d) or 365(a) and this section to the prior foreign application, unless previously submitted;
(2) The surcharge set forth in § 1.17(t); and
(3) A statement that the entire delay between the date the claim was due under paragraph (a)(1) of this section and the date the claim was filed was unintentional. The Director may require additional information where there is a question whether the delay was unintentional.

[para. (b), 48 FR 41275, Sept. 17, 1982, effective Oct. 1 1982; 48 FR 2710, Jan. 20, 1983, effective Feb. 27, 1983; para. (b), 49 FR 554, Jan. 4, 1984, effective Apr. 1, 1984; para. (a), 49 FR 48416, Dec. 12, 1984, effective Feb. 11, 1985; para. (a), 54 FR 6893, Feb. 15, 1989, effective Apr. 17, 1989; para. (a) revised, 54 FR 9432, March 7, 1989, effective Apr. 17, 1989; para. (a), 54 FR 47518, Nov. 15, 1989, effective Jan. 16, 1990; para. (a) revised, 58 FR 54504, Oct. 22, 1993, effective Jan. 3, 1994; revised, 60 FR 20195, Apr.25, 1995, effective June 8, 1995; para. (a) revised, 62 FR 53131, Oct. 10, 1997, effective Dec. 1, 1997; para. (a) revised, 65 FR 54604, Sept. 8, 2000, effective Nov. 7, 2000; para. (a) revised and para. (c) added, 65 FR 57024, Sept. 20, 2000, effective Nov. 29, 2000; paras. (a) and (c) corrected, 65 FR 66502, Nov. 6, 2000, effective Nov. 29, 2000; paras.(a)(1) and (c) revised, 66

FR 67087, Dec. 28, 2001, effective Dec. 28, 2001; para. (c)(3) revised, 68 FR 14332, Mar. 25, 2003, effective May 1, 2003; paras. (a)(3) and (a)(4) revised

37 C.F.R. §1.183 sets forth, *in toto*:

In an extraordinary situation, when justice requires, any requirement of the regulations in this part which is not a requirement of the statutes may be suspended or waived by the Director or the Director's designee, sua sponte, or on petition of the interested party, subject to such other requirements as may be imposed. Any petition under this section must be accompanied by the petition fee set forth in § 1.17(h).

[47 FR 41278, Sept. 17, 1982, effective Oct. 1, 1982; revised, 68 FR 14332, Mar. 25, 2003, effective May 1, 2003]

§ 1.135 Abandonment for failure to reply within time period.
(a) If an applicant of a patent application fails to reply within the time period provided under § 1.134 and § 1.136, the application will become abandoned unless an Office action indicates otherwise.

[Paras. (a), (b), and (c), 47 FR 41276, Sept. 17, 1982, effective Oct. 1, 1982; para. (d) deleted, 49 FR 555, Jan. 4, 1984, effective Apr. 1, 1984; revised, 62 FR 53131, Oct. 10, 1997, effective Dec. 1, 1997]

Analysis

In order to submit a grantable petition under 37 CFR 1.183, Petitioner must show (1) that this is an extraordinary situation where (2) justice requires waiver of the rule. In re Sivertz, 227 U.S.P.Q. 255, 256 (Comm'r Pat. 1985).

Petitioner has not established that either condition exists in this case. The circumstances of this case do not demonstrate an extraordinary situation, much less one where justice requires waiver of the rules.

The existence of an extraordinary situation

The PTO has a well established and well publicized practice by which practitioners may secure priority to a foreign application. Under 37 C.F.R. §1.55, an applicant who wishes to secure the right of priority must comply with certain formal requirements within a specified time. If these requirements are not complied with, the right of priority is lost and cannot thereafter be asserted.

Specifically, the requirements of the rule are (a) that the applicant must file a claim for the right and (b) he or she must also file a certified copy of the original foreign application,

and (c) these papers must be filed within a certain time limit. The maximum time limit specified in the rule is that the claim for priority and the priority papers must both be filed before the patent is granted[1]. If the required papers are not filed within the time limit set, the right of priority is lost. As the record presently discloses that the certified copy of the priority document was not filed in the application either during prosecution or prior to issuance of the application into a patent, the right of priority to the foreign patent application was lost.

With respect to the concurrently filed request for Certificate of Correction, a claim to foreign priority benefits cannot be perfected via a Certificate of Correction if the requirements of 35 U.S.C. §119 and 37 C.F.R. §1.55 have not been satisfied in the patented application or, if applicable, its parent[2]. As such, the request for a Certificate of Correction must also be dismissed as moot[3].

At no time during the pendency of this application, did Petitioner ever submit a copy of the foreign reference. It is not clear what prevented him from doing the same, much less what is extraordinary about a practitioner not complying with the regulations and failing to provide the Office with a required submission. As such, there does not appear to be anything extraordinary about Petitioner's situation.

The question of whether justice requires the waiver of the rule

As Petitioner has indicated, a reissue was granted in Brenner v. State of Israel, 400 F.2d 789; 158 USPQ 584 (D.C. Cir. 1968), where the only ground urged was applicant's failure to file the certified copy of the original foreign application under 35 U.S.C. § 119 before the patent was granted. Under the circumstances of this case, petitioner may wish to seek relief from his predicament by way of reissue under 35 U.S.C. § 251[4, 5].

As such, an avenue exists by which Petitioner may escape this quandary, and as such, justice does not require that he be allowed to achieve priority via the filing of a certificate of correction, in contravention to the requirements of 37 C.F.R. §1.55(c).

---

1 See 37 C.F.R. §1.55(a)(2).
2 See In re Van Esdonk, 187 USPQ 671 (Comm'r. Pat.1975).
3 See MPEP § 201.16.
4 Brenner at 789, 584.
5 See also 65 F.R. 57024 (Sept. 2000) MPEP §§ 201.16, 1402.

Conclusion

The petition under 37 C.F.R. §1.183 is **DISMISSED**.

Any reply must be submitted within **TWO (2) MONTHS** from the mail date of this decision. Extensions of time under 37 C.F.R. §1.136(a) are permitted. The reply should include a cover letter entitled "Renewed Petition Under 37 C.F.R. §1.183." **Thereafter, there will be no further reconsideration of this matter**[6, 7].

Alternatively, Petitioner may wish to consider filing a reissue application, if he desires to secure priority to the foreign application referenced in his petition.

This is not a final agency action within the meaning of 5 U.S.C 704.

The renewed petition should indicate in a prominent manner that the attorney handling this matter is Paul Shanoski, and may be submitted by mail[8], hand-delivery[9], or facsimile[10].

Telephone inquiries regarding *this decision* should be directed to the undersigned at (571) 272-3225. All other inquiries concerning examination procedures or status of the application should be directed to the Technology Center.

Paul Shanoski
Senior Attorney
Office of Petitions
United States Patent and Trademark Office

---

6 For more than a century, punctuality and due diligence, equally with good faith, have been deemed essential requisites to the success of those who seek to obtain the special privileges of the patent law, and they are demanded in the interest of the public and for the protection of rival inventors. See: Porter v. Louden, 7 App.D.C. 64 (C.A.D.C. 1895), citing Wollensak v. Sargent, 151 U.S. 221, 228, 38 L. Ed. 137, 14 S. Ct. 291 (1894). An invention benefits no one unless it is made public, and the rule of diligence should be so applied as to encourage reasonable promptness in conferring this benefit upon the public. Automatic Electric Co. v. Dyson, 52 App. D.C. 82; 281 F. 586 (C.A.D.C. 1922). Generally, 35 U.S.C. §6; 37 C.F.R.§§1.181, 182, 183.

7 If, on the second request for reconsideration, Petitioner fails to satisfy the showings burden required: (a) the resulting decision may be one viewed as final agency action; and (b) provisions for reconsideration, such as those at 37 C.F.R. §1.137(e), will **not** apply to that decision.

8 Mail Stop Petition, Commissioner for Patents, United States Patent and Trademark Office, P.O. Box 1450, Alexandria, VA, 22313-1450.

9 Customer Window, Randolph Building, 401 Dulaney Street, Alexandria, VA, 22314.

10 (571) 273-8300- please note this is a central facsimile number.

UNITED STATES PATENT AND TRADEMARK OFFICE

Commissioner for Patents
United States Patent and Trademark Office
P.O. Box 1450
Alexandria, VA 22313-1450
www.uspto.gov

Morrison & Foerster LLP
1650 Tysons Boulevard
Suite 400
Mclean, VA 22102

COPY MAILED

SEP 19 2007

OFFICE OF PETITIONS

In re Application of	:	
Bernhard Bohmer et al.	:	
Application No. 10/793,683	:	DECISION ON PETITION
Filed: March 5, 2004	:	TO WITHDRAW
Attorney Docket No. 449122070300	:	FROM RECORD
	:	

This is a decision on the Request to Withdraw as attorney or agent of record under 37 C.F.R. § 1.36(b), filed May 17, 2007.

The request is **NOT APPROVED** as moot.

A review of the file record indicates that the power of attorney to Morrison & Foerster LLP has been revoked by the assignee of the patent application on September 11, 2007. Accordingly, the request to withdraw under 37 C.F.R. § 1.36(b) is moot.

All future communications from the Office will continue to be directed to the below-listed address until otherwise notified by applicant.

Telephone inquires concerning this decision should be directed to Terri Williams at 571-272-2991.

T. Williams

Terri Williams
Petitions Examiner
Office of Petitions

cc: **Bell, Boyd & Lloyd, LLP**
P.O. Box 1135
Chicago, IL 60690

UNITED STATES PATENT AND TRADEMARK OFFICE

Commissioner for Patents
United States Patent and Trademark Office
P.O. Box 1450
Alexandria, VA 22313-1450
www.uspto.gov
DIW Apr-07

MEYERTONS, HOOD, KIVLIN, KOWERT & GOETZEL, P.C.
P.O. BOX 398
AUSTIN TX 78767-0398

COPY MAILED

MAY 01 2007

OFFICE OF PETITIONS

In re Application of	:	
Lockwood et al.	:	DECISION ON PETITION
Application No. 10/793,696	:	TO WITHDRAW HOLDING
Filed: 03/04/2004	:	OF ABANDONMENT
Atty Dcket No. 5777-00210	:	

This is a decision on the "PETITION UNDER 37 C.F.R. 1.181 TO WITHDRAW HOLDING OF ABANDONMENT" filed 6 February, 2007 (certificate of mailing date 2 February, 2007), which is being treated as a request to withdraw the holding of abandonment of the above-identified application.

This application was held abandoned for failure to respond in a timely manner to the Notice of Allowance and Issue Fee Due mailed on Notice to File Missing Parts of Nonprovisional Application mailed on 28 December, 2005. A Notice of Abandonment was mailed 6 December, 2006.

Petitioner asserts that a proper response was timely filed. In support of the petition, petitioner submits a copy of a postcard receipt date-stamped by the USPTO with a date of 13 March, 2006, acknowledging receipt of, *inter alia*, a Request for Continued Examination (RCE) Request Transmittal Form, an Information Disclosure Statement (IDS), and a fee authorization form. The postcard identifies the application by applicant's name, application number, filing date, attorney docket number, and invention title. A copy of the Response was included with this petition.

The original correspondence filed was not matched with the file at the time the Notice of Abandonment was mailed and cannot be located. However, M.P.E.P. § 503 states, "[a] post card receipt which itemizes and properly identifies the papers which are being

filed serves as *prima facie* evidence of receipt in the PTO of all the items listed thereon on the date stamped thereon by the PTO." Accordingly, it is concluded that the response was timely filed in the Office but was not matched with the application file. For the reasons stated above, the Notice of Abandonment is hereby vacated and the holding of abandonment withdrawn.

The petition is **GRANTED**.

The application file will be forwarded to Technology Center Art Unit 1626 for further processing.

Telephone inquiries concerning this matter may be directed to the undersigned at (571)272-3231.

D Wood

Douglas I. Wood
Senior Petitions Attorney
Office of Petitions

UNITED STATES PATENT AND TRADEMARK OFFICE

Commissioner for Patents
United States Patent and Trademark Office
P.O. Box 1450
Alexandria, VA 22313-1450
www.uspto.gov

Liniak, Berenato, Longacre & White
Ste. 240
6550 Rock Spring Drive
Bethesda MD 20817

COPY MAILED

AUG 18 2006

OFFICE OF PETITIONS

In re Application of	:	
Kenric B. Rose	:	
Application No. 10/793,728	:	DECISION ON PETITION
Filed: March 08, 2004	:	TO WITHDRAW
Attorney Docket No. 8200.862	:	FROM RECORD
	:	

This is a decision on the Request to Withdraw as attorney or agent of record under 37 C.F.R. § 1.36(b), filed January 05 2006.

The request is **APPROVED**.

A grantable request to withdraw as attorney/agent of record must be signed by every attorney/agent seeking to withdraw or contain a clear indication that one attorney is signing on behalf of another/others. A request to withdraw will not be approved unless at least 30 (thirty) days would remain between the date of approval and the later of the expiration date of a time to file a response or the expiration date of the maximum time period which can be extended under 37 C.F.R. § 1.136(a).

The request was signed by Thomas P. Liniak attorney/agent of record on behalf of himself.

Thomas P. Liniak has been withdrawn as attorney or agent of record; all other attorneys remain of record.

The correspondence address of record remains unchanged.

Telephone inquiries concerning this decision should be directed to Charles Smoot at 571-272-3299.

David Bucci
Petitions Examiner
Office of Petitions

UNITED STATES PATENT AND TRADEMARK OFFICE

Commissioner for Patents
United States Patent and Trademark Office
P.O. Box 1450
Alexandria, VA 22313-1450
www.uspto.gov

GEOFFREY WHARTON
'ROSE COTTAGE' 37 MONTAGU STREET
NEW NORFOLK, 7140 AU AUSTRALIA

COPY MAILED

DEC 15 2006

OFFICE OF PETITIONS

In re Application of	:	
GEOFFREY WHARTON	:	
Application No. 10/793,730	:	ON PETITION
Filing or 371(c) Date: 03/08/2004	:	
Title of Invention:	:	
ELECTRICAL MAINS PLUG AND	:	
SOCKETS SYSTEM	:	

This Decision is in response to the correspondence received March 22, 2006, wherein Applicant contends that a response to an Office action was timely-filed September 7, 2005, and requests withdrawal of the holding of abandonment. The correspondence is properly treated as a petition under 37 CFR 1.181. The delay in treating this petition is regretted.

The petition is **dismissed**.

Any further petition for reconsideration must be submitted within TWO (2) MONTHS from the mail date of this decision. Extensions of time under 37 CFR 1.136(a) are permitted. The reconsideration request should include a cover letter entitled "Renewed Petition under [insert the applicable code section]." This is **not** final agency action within the meaning of 5 U.S.C. § 704.

Background

The above-identified application became abandoned for failure to timely and properly reply to the non-final Office action, mailed June 10, 2005. The Office action set a three (3) month period for reply. Extensions of time were available under 37 CFR 1.136(a). No response having been received, the application became abandoned September 11, 2005. A Notice of Abandonment was mailed February 21, 2006.

Applicant's Assertion

Applicant files the instant petition and asserts that a timely reply to the Office action was filed on September 7, 2005, and received by this Office and "signed for by FAB 8336833". Applicant admits that he used the 2011 South Clark Place Arlington Virginia address and now understands that the Office has moved. Applicant avers that he has attached a copy of the DHL delivery.

Applicable Law, Rules and MPEP

Applicant is advised the 37 CFR 1.1 mandates that

> Except as provided in paragraphs (a)(3)(i), (a)(3)(ii) and (d)(1) of this section, all correspondence intended for the United States Patent and Trademark Office **must** be addressed to either "Director of the United States Patent and Trademark Office, P.O. Box 1450, Alexandria, Virginia 22313-1450" or to specific areas within the Office as set out in paragraphs (a)(1), and (a)(3)(iii) of this section. (Emphasis supplied).

Applicant is further advised that 37 CFR 1.6, Receipt of correspondence, in relevant part states that

> (a) Correspondence received in the Patent and Trademark Office **is stamped with the date of receipt except as follows**:
> (1) The Patent and Trademark Office is not open for the filing of correspondence on any day that is a Saturday, Sunday, or Federal holiday within the District of Columbia. Except for correspondence transmitted by facsimile under paragraph (a)(3) of this section, or filed electronically under paragraph (a)(4) of this section, no correspondence is received in the Office on Saturdays, Sundays, or Federal holidays within the District of Columbia.
> (2) Correspondence filed in accordance with § 1.10 will be stamped with the date of deposit as "Express Mail" with the United States Postal Service.

Further to this, 37 CFR § 1.10, Filing of correspondence by "Express Mail", provides that

> (1) Any correspondence received by the U.S. Patent and Trademark Office (USPTO) that was delivered by the "Express Mail Post Office to Addressee" service of the United States Postal Service (USPS) will be considered filed with the USPTO on the date of deposit with the USPS.
> (2) The date of deposit with USPS is shown by the "date in" on the "Express Mail" label or other official USPS notation. If the USPS deposit date cannot be determined, the correspondence will be accorded the USPTO receipt date as the filing date. See § 1.6(a).
> (b) Correspondence should be deposited directly with an employee of the USPS to ensure that the person depositing the correspondence receives a legible copy of the "Express Mail" mailing label with the "date-in" clearly marked. Persons dealing indirectly with the employees of the USPS (such as by deposit in an "Express Mail" drop box) do so at the risk of not receiving a copy of the "Express Mail" mailing label with the desired "date-in" clearly marked. The paper(s) or fee(s) that constitute the correspondence should also include the "Express Mail" mailing label number thereon. See paragraphs (c), (d) and (e) of this section.

Applicant is also advised that, for purposes other than receipt of a filing date, correspondence may be filed via facsimile using the certificate of transmission procedures under 37 CFR 1.8 as follows:

> 1.8 Certificate of mailing or transmission.
> (a) Except in the situations enumerated in paragraph (a)(2) of this section or as otherwise expressly excluded in this chapter, correspondence required to be filed in the U.S. Patent and Trademark Office within a set period of time will be considered as being timely filed if the procedure described in this section is followed. The actual date of receipt will be used for all other purposes.
> (1) Correspondence will be considered as being timely filed if:
> (i) The correspondence is mailed or transmitted prior to expiration of the set period of time by being:
> (A) Addressed as set out in § 1.1(a) and deposited with the U.S. Postal Service with sufficient postage as first class mail; or
> (B) Transmitted by facsimile to the Patent and Trademark Office in accordance with § 1.6(d); and
> (ii) The correspondence includes a certificate for each piece of correspondence stating the date of deposit or transmission. The person signing the certificate should have reasonable basis to expect that the correspondence would be mailed or transmitted on or before the date indicated.

The Manual of Patent Examining Procedure ("MPEP"), section 711.03(c), Petition To Withdraw Holding of Abandonment Based on Evidence That a Reply, Was Timely Mailed or Filed, reiterates the two methods as follows:

> 37 CFR 1.10(c) through 1.10(e) and 1.10(g) set forth procedures for petitioning the Director of the USPTO to accord a filing date to correspondence as of the date of deposit of the correspondence as "Express Mail." A petition to withdraw the holding of abandonment relying upon a timely reply placed in "Express Mail" must include an appropriate petition under 37 CFR 1.10(c), (d), (e), or (g) (see MPEP § 513). When a paper is shown to have been mailed to the Office using the "Express Mail" procedures, the paper must be entered in PALM with the "Express Mail" date. Similarly, applicants may establish that a reply was filed with a postcard receipt that properly identifies the reply and provides prima facie evidence that the reply was timely filed. See MPEP § 503. For example, if the application has been held abandoned for failure to file a reply to a first Office action, and applicant has a postcard receipt showing that an amendment was timely filed in response to the Office action, then the holding of abandonment should be withdrawn upon the filing of a petition to withdraw the holding of abandonment. When the reply is shown to have been timely filed based on a postcard receipt, the reply must be entered into PALM using the date of receipt of the reply as shown on the post card receipt.

Where a certificate of mailing under 37 CFR 1.8, but not a postcard receipt, is relied upon in a petition to withdraw the holding of abandonment, see 37 CFR 1.8(b) and MPEP § 512. As stated in 37 CFR 1.8(b)(3) the statement that attests to the previous timely mailing or transmission of the correspondence must be on a personal knowledge basis, or to the satisfaction of the Director of the USPTO. If the statement attesting to the previous timely mailing is not made by the person who signed the Certificate of Mailing (i.e., there is no personal knowledge basis), then the statement attesting to the previous timely mailing should include evidence that supports the conclusion that the correspondence was actually mailed (e.g., copies of a mailing log establishing that correspondence was mailed for that application). When the correspondence is shown to have been timely filed based on a certificate of mailing, the correspondence is entered into PALM with the actual date of receipt (i.e., the date that the duplicate copy of the papers was filed with the statement under 37 CFR 1.8). 37 CFR 1.8(b) also permits applicant to notify the Office of a previous mailing or transmission of correspondence and submit a statement under 37 CFR 1.8(b)(3) accompanied by a duplicate copy of the correspondence when a reasonable amount of time (e.g., more than one month) has elapsed from the time of mailing or transmitting of the correspondence. Applicant does not have to wait until the application becomes abandoned before notifying the Office of the previous mailing or transmission of the correspondence. Applicant should check the private Patent Application Information Retrieval (PAIR) system for the status of the correspondence before notifying the Office. See MPEP § 512.

Analysis

Applicant filed correspondence using DHL. There is no provision in the rules for withdrawing the holding of abandonment based upon the filing of correspondence via DHL. As provided in 37 CFR 1.6, the correspondence will be accorded the date of receipt as the filing date. Also, correspondence must be filed at the Alexandria, Virginia correspondence address. Applicant admits that the correspondence was filed at the Arlington, Virginia address. The correspondence was received at the PTO on September 15, 2006, and it is this date that was accorded the filing date of the response to the Office action. The response did not include an authorization to charge any addition fees, i.e. extension of time fees. Finally, this Office is unable to identify or verify the signature "FAB 8336833".

Conclusion

In view of the above, the reply was not timely filed, and the application is properly held abandoned.

Alternate venue

Applicant is strongly urged to file a petition stating that the delay was unintentional. Public Law 97-247, § 3, 96 Stat. 317 (1982), which revised patent and trademark fees, amended 35 U.S.C. § 41(a)(7) to provide for the revival of an "unintentionally" abandoned application without a showing that the delay in was "unavoidable." An "unintentional" petition under 37 CFR 1.137(b) must be accompanied by the required fee.

The filing of a petition under 37 CFR 1.137(b) cannot be intentionally delayed and therefore must be filed promptly. A person seeking revival due to unintentional delay can not make a statement that the delay was unintentional unless the entire delay, including the delay from the date it was discovered that the application was abandoned until the filing of the petition to revive under 37 CFR 1.137(b), was unintentional. A statement that the delay was unintentional is not appropriate if petitioner intentionally delayed the filing of a petition for revive under 37 CFR 1.137(b).

Further correspondence with respect to this matter should be addressed as follows:

By mail: Commissioner for Patents
PO Box 1450
Alexandria, VA 22313-1450

By FAX: (571) 273-8300
Attn: Office of Petitions

By hand: Customer Service Window
Randolph Building
401 Dulany Street
Alexandria, VA 22314

Telephone inquiries concerning this matter should be directed to the undersigned at (571) 272-3232.

Derek L. Woods
Attorney
Office of Petitions

UNITED STATES PATENT AND TRADEMARK OFFICE

Commissioner for Patents
United States Patent and Trademark Office
P.O. Box 1450
Alexandria, VA 22313-1450
www.uspto.gov

GEOFFREY WHARTON
'ROSE COTTAGE' 37 MONTAGU STREET
NEW NORFOLK 7140 AU AUSTRALIA

COPY MAILED

APR 2 7 2007

OFFICE OF PETITIONS

In re Application of	:	
GEOFFREY WHARTON	:	
Application No.: 10/793730	:	DECISION ON
Filing or 371(c) Date: 03/08/2004	:	PETITION
Title of Invention:	:	
ELECTRICAL MAINS PLUG AND	:	
SOCKETS SYSTEM	:	

This is a decision in response to the Renewed Petition Objection to Abandonment, January 15, and January 23, 2007. Renewed Petition is properly treated under 37 CFR 1.181. The delay in treating this petition is regretted.

This Petition is hereby **dismissed**.

Any further petition must be submitted within TWO (2) MONTHS from the mail date of this decision. Extensions of time under 37 CFR 1.136(a) are permitted. The reconsideration request should include a cover letter entitled "Renewed Petition under [insert the applicable code section]." This is **not** final agency action within the meaning of 5 U.S.C. § 704.

The above-identified application became abandoned for failure to timely and properly reply to the non-final Office action, mailed June 10, 2005. The Office action set a three (3) month period for reply. No reply having been received, the application became abandoned on September 11, 2005. A Notice of Abandonment was mailed February 21, 2006.

March 22, 2006 Petition under 37 CFR 1.181

Applicant filed a petition on March 22, 2006, to withdraw the holding of abandonment based upon a DHL delivery of a response to the Office action that was transmitted to 2011 South Clark Place, Arlington, VA

Decision dismissing the March 22, 2006 petition

A Decision dismissing the March 22, 2006 petition was mailed December 15, 2006. The Decision informed Applicant that 37 CFR 1.1 mandates that correspondence intended for this Office be sent to the "Director of the United States Patent and Trademark Office, P.O. Box 1450, Alexandria, Virginia 22313-1450", or to specific areas within the Office as set out in paragraphs (a)(1), and (a)(3)(iii) of this section.

The Decision further advised Applicant that 37 CFR 1.6 states clearly that, unless correspondence is filed using "Express Mail" under 37 CFR 1.10, or the Certificate of Mailing or Transmission procedures of 37 CFR 1.8, then all correspondence is stamped with the date of receipt.

Finally, the Decision directed Applicant to the MPEP section 711.03(c)B, Petition To Withdraw Holding of Abandonment Based on Evidence That a Reply Was Timely Mailed or Filed, which reiterates 37 CFR §§ 1.10 and 1.8, and also discusses the procedures for establishing that a reply was filed using a return-receipt postcard.

The Decision concluded by stating that there is no provision in the rules for withdrawing the holding of abandonment based upon the filing of correspondence via DHL. As provided in 37 CFR 1.6, the correspondence will be accorded the date of receipt as the filing date.

The present renewed petition

Applicant files the present renewed petition and asserts that DHL has advised Applicant that a reply to the Office action was timely filed and received in this Office three (3) days prior to the deadline for filing the response, on July 9, 2005. Applicant provides no documentary support for this assertion.

Applicable Law, Rules and MPEP

As stated in the Decision dismissing the March 22, 2006 petition, 37 CFR 1.6 states that correspondence is stamped with the date of receipt, unless it is filed under the provisions of 37 CFR 1.10 or 37 CFR 1.8. The MPEP further iterates that there are but three forms of acceptable evidence that will support a grantable petition to withdraw the holding of abandonment based upon evidence that a reply was timely mailed or filed: Express Mail under 37 CFR 1.10; Certificate of Mailing or Transmission under 37 CFR 1.8, or a return-receipt postcard as provided in the MPEP 503.

Analysis

Here, Applicant has failed to comply with any of the methods outlined above. As such, a petition to withdraw the holding of abandonment based upon evidence that a reply was timely mailed or filed is not grantable.

Conclusion

The petition is dismissed.

After a decision on the petition for reconsideration, no further reconsideration or review of the matter will be undertaken by the Director. Therefore, it is extremely important that petitioner supply **any** and **all** relevant information and documentation with his request for reconsideration. The Director's decision will be based solely on the administrative record in existence.

Alternate venue

Applicant is again urged to file a petition under 37 CFR 1.137(a) or (b) stating that the delay was either unavoidable or unintentional. Petitions under 37 CFR 1.137(b) are less burdensome (statement(s) rather than a showing accompanied by documentary evidence) to file and are evaluated under the less stringent "unintentional delay" standard. Applicants determining whether to file a petition to revive an application under 37 CFR 1.137(b) or 1.137(a) should take the following into account:

While the Office reserves the authority to require further information concerning the cause of abandonment and delay in filing a petition to revive, the Office relies upon the applicant's duty of candor and good faith and accepts the statement that "the entire delay in filing the required reply from the due date for the reply until the filing of a grantable petition pursuant to 37 CFR 1.137(b) was unintentional" without requiring further information in the vast majority of petitions under 37 CFR 1.137(b). This is because the applicant is obligated under 37 CFR 10.18 to inquire into the underlying facts and circumstances when a practitioner provides this statement to the Office. In addition, providing an inappropriate statement in a petition under 37 CFR 1.137(b) to revive an abandoned application may have an adverse effect when attempting to enforce any patent resulting from the application. See Lumenyte Int 'l Corp. v. Cable Lite Corp., Nos. 96-1011, 96-1077, 1996 U.S. App. LEXIS 16400, 1996 WL 383927 (Fed. Cir. July 9, 1996)(unpublished)(patents held unenforceable due to a finding of inequitable conduct in submitting an inappropriate statement that the abandonment was unintentional).
Even if the Office requires further information in a petition under 37 CFR 1.137(b), such petition is still significantly less burdensome to prepare and prosecute than a petition under 37 CFR 1.137(a). The Office is almost always satisfied as to whether "the entire delay...was unintentional" on the basis of statement(s) by the applicant or representative explaining the cause of the delay (accompanied at most by copies of correspondence relevant to the period of delay). A showing of unavoidable delay will require: (1) evidence concerning the procedures in place that should have avoided the error resulting in the delay; (2) evidence concerning the training and experience of the persons responsible for the error; and (3) copies of any applicable docketing records to show that the error was in fact the cause of the delay. See MPEP § 711.03(c), subsection II.C.2. In addition, a petition under 37 CFR 1.137(a) must establish that the delay was unavoidable, and not just that it was unintentional[1]. Thus, many petitions originally filed under 37 CFR 1.137(a) end up being granted under 37 CFR 1.137(b)

[1] As discussed above, "unavoidable" delay is the epitome of "unintentional" delay. Thus, an intentional delay precludes revival under 37 CFR 1.137(a) ("unavoidable" delay) or 37 CFR 1.137(b) ("unintentional" delay). See Maldague, 10 USPQ2d at 1478. Decisions on reviving abandoned applications on the basis of "unavoidable" delay have adopted the reasonably prudent person standard in determining if the delay was unavoidable:

> The word unavoidable' . . . is applicable to ordinary human affairs, and requires no more or greater care or diligence than is generally used and observed by prudent and careful men in relation to their most important business. It permits them in the exercise of this care to rely upon the ordinary and trustworthy agencies of mail and telegraph, worthy and reliable employees, and such other means and instrumentalities as are usually employed in such important business. If unexpectedly, or through the unforeseen fault or imperfection of these agencies and

when the applicant realizes that sufficient evidence concerning the delay is too difficult to obtain or the cause of delay simply does not amount to "unavoidable delay" within the meaning of 37 CFR 1.137(a).

Since the requirements of 37 CFR 1.137(a) are more exacting than the corresponding requirements of 37 CFR 1.137(b), a petition under 37 CFR 1.137(a) is significantly less likely to be grantable as filed than is a petition under 37 CFR 1.137(b). The Office usually must render a number of interlocutory decisions dismissing a petition under 37 CFR 1.137(a) and requesting additional evidence until either the applicant provides a satisfactory showing of unavoidable delay (in which case the petition can be granted) or the Office concludes that the applicant cannot provide a satisfactory showing of unavoidable delay (in which case the petition must be denied). Thus, the period between when an applicant first files a petition to revive and the Office renders a decision granting (or denying) that petition will, more often than not, be much longer if the petition is under 37 CFR 1.137(a) than it would have been if the petition were under 37 CFR 1.137(b). Public Law 97-247, § 3, 96 Stat. 317 (1982), which revised patent and trademark fees, amended 35 U.S.C. § 41(a)(7) to provide for the revival of an "unintentionally" abandoned application without a showing that the delay in was "unavoidable." An "unintentional" petition under 37 CFR 1.137(b) must be accompanied by the required fee.

The filing of a petition under 37 CFR 1.137(b) cannot be intentionally delayed and therefore must be filed promptly. A person seeking revival due to unintentional delay can not make a statement that the delay was unintentional unless the entire delay, including the delay from the date it was discovered that the application was abandoned until the filing of the petition to revive under 37 CFR 1.137(b), was unintentional. A statement that the delay was unintentional is not appropriate if petitioner intentionally delayed the filing of a petition for revive under 37 CFR 1.137(b).

Further correspondence with respect to this matter should be addressed as follows:

By mail: Commissioner for Patents
PO Box 1450
Alexandria, VA 22313-1450

By FAX: (571) 273-8300
Attn: Office of Petitions

---

instrumentalities, there occurs a failure, it may properly be said to be unavoidable, all other conditions of promptness in its rectification being present.

In re Mattullath ; 38 App. D.C. 497, 514-15 (1912)(quoting Pratt, 1887 Dec. Comm'r Pat. 31, 32-33 (1887)); see also Winkler v. Ladd, 221 F. Supp. 550, 552, 138 USPQ 666, 667-68 (D.D.C. 1963), aff'd, 143 USPQ 172 (D.C. Cir. 1963); Ex parte Henrich, 1913 Dec. Comm'r Pat. 139, 141 (1913). In addition, decisions on revival are made on a "case-by-case basis, taking all the facts and circumstances into account." Smith v. Mossinghoff, 671 F.2d 533, 538, 213 USPQ 977, 982 (D.C. Cir. 1982). Finally, a petition cannot be granted where a petitioner has failed to meet his or her burden of establishing that the delay was "unavoidable." Haines v. Quigg, 673 F. Supp. 314, 316-17, 5 USPQ2d 1130, 1131-32 (N.D. Ind. 1987).

By hand: Customer Service Window
Randolph Building
401 Dulany Street
Alexandria, VA 22314

Telephone inquiries concerning this matter should be directed to the undersigned at (571) 272-3232.

Derek L. Woods
Attorney
Office of Petitions

UNITED STATES PATENT AND TRADEMARK OFFICE

Commissioner for Patents
United States Patent and Trademark Office
P.O. Box 1450
Alexandria, VA 22313-1450
www.uspto.gov

GEOFFREY WHARTON
'ROSE COTTAGE' 37 MONTAGU STREET
NEW NORFOLK 7140 AU AUSTRALIA

COPY MAILED

SEP 20 2007

OFFICE OF PETITIONS

In re Application of GEOFFREY WHARTON Application No.: 10/793730 Filing or 371(c) Date: 03/08/2004 Title of Invention: ELECTRICAL MAINS PLUG AND SOCKETS SYSTEM	: : : : : : :	DECISION ON PETITION

This is a decision on the petition under 37 CFR 1.137(b), filed June 26, 2007, to revive the above-identified application.

This Petition is hereby **granted**.

The above-identified application became abandoned for failure to timely and properly reply to the non-final Office action, mailed June 10, 2005. The Office action set a three (3) month period for reply. No reply having been received, the application became abandoned on September 11, 2005. A Notice of Abandonment was mailed February 21, 2006.

March 22, 2006 Petition under 37 CFR 1.181

Applicant filed a petition on March 22, 2006, to withdraw the holding of abandonment based upon a DHL delivery of a response to the Office action that was transmitted to 2011 South Clark Place, Arlington, VA

Decision dismissing the March 22, 2006 petition

A Decision dismissing the March 22, 2006 petition was mailed December 15, 2006. The Decision informed Applicant that 37 CFR 1.1 mandates that correspondence intended for this Office be sent to the "Director of the United States Patent and Trademark Office, P.O. Box 1450, Alexandria, Virginia 22313-1450", or to specific areas within the Office as set out in paragraphs (a)(1), and (a)(3)(iii) of this section.

The Decision further advised Applicant that 37 CFR 1.6 states clearly that, unless correspondence is filed using "Express Mail" under 37 CFR 1.10, or the Certificate of Mailing or Transmission procedures of 37 CFR 1.8, then all correspondence is stamped with the date of receipt.

Finally, the Decision directed Applicant to the MPEP section 711.03(c)B, Petition To Withdraw Holding of Abandonment Based on Evidence That a Reply Was Timely Mailed or Filed, which reiterates 37 CFR §§ 1.10 and 1.8, and also discusses the procedures for establishing that a reply was filed using a return-receipt postcard.

The Decision concluded by stating that there is no provision in the rules for withdrawing the holding of abandonment based upon the filing of correspondence via DHL. As provided in 37 CFR 1.6, the correspondence will be accorded the date of receipt as the filing date.

The January 23, 2007 renewed petition

Applicant filed a renewed petition on January 23, 2007 and asserted that DHL has advised Applicant that a reply to the Office action was timely filed and received in this Office three (3) days prior to the deadline for filing the response, on July 9, 2005. Applicant provided no documentary support for the assertion.

Decision dismissing the January 23, 2007 petition

A Decision dismissing the January 23, 2007 petition was mailed April 27, 2007. The Decision reiterated for Applicant there are but three forms of acceptable evidence that will support a grantable petition to withdraw the holding of abandonment based upon evidence that a reply was timely mailed or filed: Express Mail under 37 CFR 1.10; Certificate of Mailing or Transmission under 37 CFR 1.8, or a return-receipt postcard as provided in the MPEP 503. The Decision concluded that Applicant had failed to comply with any of the methods outlined above. As such, a petition to withdraw the holding of abandonment based upon evidence that a reply was timely mailed or filed was not grantable

The present petition

Applicant files the present petition, and a reply in the form of an Amendment in response to the Office action was filed on September 15, 2005.

The petition satisfies the conditions for revival pursuant to the provisions of 37 CFR 1.137(b) in that (1) the reply in the form of an Amendment has been previously filed; (2) the petition fee; and (3) the required statement of unintentional delay have also been filed. Accordingly, the reply is accepted as having been unintentionally delayed.

The application is being referred to Technology Center Art Unit 2839 for processing of the Amendment filed with the petition in due course.

Telephone inquiries concerning this decision should be directed to the undersigned at (571) 272-3232.

Derek L. Woods
Attorney
Office of Petitions

UNITED STATES PATENT AND TRADEMARK OFFICE

Commissioner for Patents
United States Patent and Trademark Office
P.O. Box 1450
Alexandria, VA 22313-1450
www.uspto.gov

MILBANK, TWEED, HADLEY & MCCLOY LLP
INTERNATIONAL SQUARE BUILDING
1850 K STREET, N.W., SUITE 1100
WASHINGTON DC 20006

COPY MAILED
APR 1 8 2006
OFFICE OF PETITIONS

In re Application of	:	
Borodic, Gary	:	
Application No. 10/793,739	:	ON PETITION
Filed: March 8, 2004	:	
Attorney Docket No. 33677.00300US	:	

This is a decision on the petition under 37 C.F.R. § 1.137(b), filed March 24, 2006, to revive the above-identified application.

The petition is **GRANTED.**

The petition satisfies the conditions for revival pursuant to the provisions of 37 CFR 1.137(b) in that (1) the reply in the form of a Notice of Appeal; (2) the petition fee; and (3) the required statement of unintentional delay have been received. Accordingly, the response has been accepted as having been unintentionally delayed.

The Notice of Appeal filed March 24, 2006, has been entered and made of record. Accordingly, the 2-month period for filing the appeal brief accompanied by the fee required by law, runs from the date of this decision.

An extension of time under 37 CFR 1.136 must be filed prior to the expiration of the maximum extendable period for reply. See In re Application of S., 8 USPQ2d 1630, 1631 (Comm'r Pats. 1988). Accordingly, since the $1020.00 extension of time fee submitted with the petition on March 24, 2006, was subsequent to the maximum extendable period for reply, this fee is unnecessary and will be credited to petitioner's deposit account.

This matter is being referred to Technology Center 1600 for further processing.

Telephone inquiries regarding this decision should be directed to the undersigned at (571) 272-3282.

Liana Chase
Petitions Examiner
Office of Petitions

UNITED STATES PATENT AND TRADEMARK OFFICE

COMMISSIONER FOR PATENTS
UNITED STATES PATENT AND TRADEMARK OFFICE
P.O. BOX 1450
ALEXANDRIA, VA 22313-1450
www.uspto.gov

BC
Paper No. 062504

Mailed: June 25, 2004

In re application of
Potito De Paolis
Serial No. 10/793,792
Filed: March 8, 2004
For: DIALYSIS DEVICE

DECISION ON PETITION

This is in response to the Petition filed March 8, 2004, requesting that the above-identified application be granted Special Status under Section 708.02, IV of the MPEP and 37 CFR 1.102(c).

The petition has been considered and found to comply with the requirements set forth under the above-noted section.

Accordingly, this PETITION is **GRANTED**.

Blaine R. Copenheaver, Jr.
Supervisory Patent Examiner, Art Unit 1724
Technology Center 1700
Chemical and Materials Engineering

Christopher D. Wood
Wood & Eisenberg
2009 N 14th Street
Suite 706
Arlington, VA 22201

UNITED STATES PATENT AND TRADEMARK OFFICE

Commissioner for Patents
United States Patent and Trademark Office
P.O. Box 1450
Alexandria, VA 22313-1450
www.uspto.gov

ERIC ROBINSON
PMB 955
21010 SOUTHBANK ST.
POTOMAC FALLS, VA 20165

MAILED

MAR 30 2009

OFFICE OF PETITIONS

In re Application of
Kiyoshi Kato, et al.
Application No.: 10/793,822
Filed: March 8, 2004
Attorney Docket No.: 0756-7264

ON PETITION

This is a decision on the petition, filed March 30, 2009, under 37 CFR 1.313(c)(2) to withdraw the above-identified application from issue after payment of the issue fee.

The petition is **GRANTED**.

The above-identified application is withdrawn from issue for consideration of a submission under 37 CFR 1.114 (request for continued examination). See 37 CFR 1.313(c)(2).

Petitioner is advised that the issue fee paid on March 12, 2009, cannot be refunded. If, however, this application is again allowed, petitioner may request that it be applied towards the issue fee required by the new Notice of Allowance.[1]

Telephone inquiries relating to this decision should be directed to the undersigned at (571) 272-3204.

The application is being referred to Technology Center AU 2629 for further processing of the request for continued examination under 37 CFR 1.114 and for consideration of the concurrently filed Information Disclosure Statement (IDS).

/SDB/

Sherry D. Brinkley
Petitions Examiner
Office of Petitions

[1] *The request to apply the issue fee to the new Notice may be satisfied by completing and returning the new Part B – Fee(s) Transmittal Form (along with any balance due at the time of submission). Petitioner is advised that the Issue Fee Transmittal Form must be completed and timely submitted to avoid abandonment of the application.*

UNITED STATES PATENT AND TRADEMARK OFFICE

Commissioner for Patents
United States Patent and Trademark Office
P.O. Box 1450
Alexandria, VA 22313-1450
www.uspto.gov

CANTOR COLBURN, LLP
20 CHURCH STREET
22ND FLOOR
HARTFORD CT 06103

COPY MAILED

AUG 3 1 2009

OFFICE OF PETITIONS

In re Application of	:	
Kim et al.	:	
Application No. 10/793,860	:	ON PETITION
Filed: March 8, 2004	:	
Attorney Docket No. PNK0251US	:	

This is a decision on the petition under 37 C.F.R. § 1.137(b), filed July 2, 2009, to revive the above-identified application.

The petition is **GRANTED**.

The petition satisfies the requirements of 37 CFR 1.137(b) in that petitioner has supplied (1) the reply in the form of Request for Continued Examination (RCE), (2) the petition fee, and (3) a proper statement of unintentional delay.

Telephone inquiries concerning this decision should be directed to the undersigned at (571) 272-3206.

This matter is being referred to Technology Center AU 2871 for further processing of the Request for Continued Examination under 37 CFR 1.114 filed concurrently filed with the instant petition.

Liana Walsh
Petitions Examiner
Office of Petitions

UNITED STATES PATENT AND TRADEMARK OFFICE

Commissioner for Patents
United States Patent and Trademark Office
P.O. Box 1450
Alexandria, VA 22313-1450
www.uspto.gov
DIW Dec-07

TROXELL LAW OFFICE PLLC
5205 LEESBURG PIKE, SUITE 1404
FALLS CHURCH VA 22041

COPY MAILED

DEC 21 2007

OFFICE OF PETITIONS

In re Application of	:	
Chang-Li Hung	:	
Application Number: 10/793877	:	DECISION ON PETITION
Filing Date: 03/08/2004	:	
Attorney Docket Number:	:	
3076/146	:	

This is a decision on the petition filed on October 30, 2007, under 37 CFR 1.137(b),[1] to revive the above-identified application.

The petition is **GRANTED**.

The application became abandoned on August 5, 2007, for failure to timely submit the issue and publication fees in response to the Notice of Allowance and Fee(s) Due mailed on May 4, 2007, which set a three (3)-month statutory period for reply. Notice of Abandonment was mailed on August 28, 2007.

---

[1] Effective December 1, 1997, the provisions of 37 CFR 1.137(b) now provide that where the delay in reply was unintentional, a petition may be filed to revive an abandoned application or a lapsed patent pursuant to 37 CFR 1.137(b). A grantable petition filed under the provisions of 37 CFR 1.137(b) must be accompanied by:

(1) the required reply, unless previously filed. In a nonprovisional application abandoned for failure to prosecute, the required reply may be met by the filing of a continuing application. In a nonprovisional utility or plant application filed on or after June 8, 1995, and abandoned for failure to prosecute, the required reply may also be met by the filing of a request for continuing examination in compliance with § 1.114. In an application or patent, abandoned or lapsed for failure to pay the issue fee or any portion thereof, the required reply must be the payment of the issue fee or any outstanding balance thereof. In an application, abandoned for failure to pay the publication fee, the required reply must include payment of the publication fee.

(2) the petition fee as set forth in 37 CFR 1.17(m);

(3) a statement that the entire delay in filing the required reply from the due date for the reply until the filing of a grantable petition pursuant to 37 CFR 1.137(b) was unintentional. The Commissioner may required additional information where there is a question whether the delay was unintentional; and

(4) any terminal disclaimer (and fee as set forth in 37 CFR 1.20(d)) required pursuant to 37 CFR 1.137(c)).

Receipt of the issue and publication fees filed with the present petition is acknowledged.

This application is being referred to the Office of Patent Publications for processing into a patent.

Telephone inquiries concerning this matter may be directed to the undersigned at (571) 272-3231.

D Wood

Douglas I. Wood
Senior Petitions Attorney
Office of Petitions

UNITED STATES PATENT AND TRADEMARK OFFICE

Commissioner for Patents
United States Patent and Trademark Office
P.O. Box 1450
Alexandria, VA 22313-1450
www.uspto.gov

COPY MAILED

SEP 24 2007

OFFICE OF PETITIONS

Stevens Law Group
P.O. Box 1667
San Jose, CA 95109

In re Application of	:	
Carl Cooper	:	
Application No. 10/793,882	:	DECISION ON PETITION
Filed: June 10, 2004	:	TO WITHDRAW
Attorney Docket No. PIXL-03200	:	FROM RECORD
	:	

This is a decision on the Request to Withdraw as attorney or agent of record under 37 C.F.R. § 1.36(b), filed June 1, 2007.

The request is **NOT APPROVED** as moot.

A review of the file record indicates that the power of attorney to Stevens Law Group has been revoked by the assignee of the patent application on May 24, 2007. Accordingly, the request to withdraw under 37 C.F.R. § 1.36(b) is moot.

All future communications from the Office will continue to be directed to the below-listed address until otherwise notified by applicant.

Telephone inquires concerning this decision should be directed to Terri Williams at 571-272-2991.

T. Williams

Terri Williams
Petitions Examiner
Office of Petitions

cc: **Johnny A. Carlock**
810 Bonnie Court
Murphy, TX 75094

UNITED STATES PATENT AND TRADEMARK OFFICE

Commissioner for Patents
United States Patent and Trademark Office
P.O. Box 1450
Alexandria, VA 22313-1450
www.uspto.gov

JOSEPH P. KRAUSE
5202 WASHINGTON STREET, SUITE 103
DOWNERS GROVE, IL 60515

MAILED

MAR 04 2009

OFFICE OF PETITIONS

In re Application of
Carl Cooper
Application No. 10/793,882
Filed: June 10, 2004
Attorney Docket No. CU-6907

ON PETITION

This is a decision on the petition, filed March 4, 2009 under 37 CFR 1.313(c)(2) to withdraw the above-identified application from issue after payment of the issue fee.

The petition is **GRANTED**.

The above-identified application is withdrawn from issue for consideration of a submission under 37 CFR 1.114 (request for continued examination). See 37 CFR 1.313(c)(2).

Petitioner is advised that the issue fee paid on January 29, 2009 in the above-identified application cannot be refunded. If, however, the above-identified application is again allowed, petitioner may request that it be applied towards the issue fee required by the new Notice of Allowance.[1]

Telephone inquiries should be directed to Irvin Dingle at (571) 272-3210.

This matter is being referred to Technology Center AU 2624 for processing of the request for continued examination under 37 CFR 1.114 and for consideration of the concurrently filed Information Disclosure Statement.

/Irvin Dingle/
Irvin Dingle
Petitions Examiner
Office of Petitions

[1] The request to apply the issue fee to the new Notice may be satisfied by completing and returning the new Issue Fee Transmittal Form PTOL-85(b), which includes the following language thereon: Commissioner for Patents is requested to apply the Issue Fee and Publication Fee (if any) or re-apply any previously paid issue fee to the application identified above. Petitioner is advised that, whether a fee is indicated as being due or not, the Issue Fee Transmittal Form **must** be completed and timely submitted to avoid abandonment. Note the language in bold text on the first page of the Notice of Allowance and Fee(s) Due (PTOL-85).

UNITED STATES PATENT AND TRADEMARK OFFICE

Commissioner for Patents
United States Patent and Trademark Office
P.O. Box 1450
Alexandria, VA 22313-1450
www.uspto.gov
DIW Apr-09

JOSEPH P. KRAUSE
5205 WASHINGTON STREET, SUITE 103
DOWNERS GROVE IL 60515

COPY MAILED

APR 2 8 2009

OFFICE OF PETITIONS

In re Application of	:	
Carl Cooper	:	
Application Number: 10/793882	:	ON PETITION
Filing Date: 06/10/2004	:	
Attorney Docket Number: CU-6907	:	

This is a decision on the petition filed under 37 CFR 1.182 on March 10, 2009, requesting that two terminal disclaimers filed in the subject application be withdrawn.

The petition is **dismissed**.

The present petition requests that two terminal disclaimers filed in the above-identified application be withdrawn.

The petition is dismissed because it has been determined that the terminal disclaimer does apply to at least one claim of record (Claim # 57). The examiner notes that US Patent No. 5,424,780 teaches a method of improving the quality of an image for display on a flat panel display device (claim 15, lines 1-4), comprising the steps of: selecting a plurality of elements of said image (claim 15, lines 4-5); comparing at least one of said plurality of elements to one or more other of said elements (claim 15, lines 5-6); altering a void in said image by filling the void with the at least one of said plurality of elements using a fill logic circuit, in response to said comparing step (claim 15, lines 6-9). Even though US Patent No. 5,424,780 does not teach details on displaying said image by scanning the plurality of elements by address selection, wherein the elements of said displayed image [[may]] include at least one of: original elements; original elements modified by said altering step; and new elements created by said altering step, US Patent No. 5,424,780 clearly teaches improving the apparent resolution of the image (claim 15, lines 1-2 and 9-12). The improved resolution

is only apparent when the image is displayed on a display device. Therefore, it would have been obvious to display new element created by the altering step. Note that the displaying step only requires at least one of original image, original element modified by the altering step and new elements created by the altering step.

During the telephone conversation, the attorney of the record mentioned to the examiner that they did not realize that the patent term of US Patent No. 5,424,780 expires May of 2009.

The examiner also notes that the applicant never challenged the rejection before they filed the terminal disclaimer back in July 28, 2008.

As such, the present petition is not favorably considered.

Further correspondence with respect to this matter should be addressed as follows:

By mail: Mail Stop Petition
Commissioner for Patents
P.O. Box 1450
Alexandria, VA 22313-1450

By FAX: (571) 273-8300
Attn: Office of Petitions

By hand: Customer Service Window
Mail Stop Petition
Randolph Building
401 Dulany Street
Alexandria, VA 22314

The application is being referred to Technology Center Art Unit 2624 for further processing.

Telephone inquires should be directed to the undersigned at 571.272.3231.

D Wood

Douglas Wood
Senior Petitions Attorney
Office of Petitions

UNITED STATES PATENT AND TRADEMARK OFFICE

Commissioner for Patents
United States Patent and Trademark Office
P.O. Box 1450
Alexandria, VA 22313-1450
www.uspto.gov
DIW Jun-09

JOSEPH P. KRAUSE
5205 WASHINGTON STREET, SUITE 103
DOWNERS GROVE IL 60515

MAILED

JUN 0 2 2009

OFFICE OF PETITIONS

In re Application of	:	
Carl Cooper	:	
Application Number: 10/793882	:	ON PETITION
Filing Date: 06/10/2004	:	
Attorney Docket Number: CU-6907	:	

This is a decision on the renewed petition filed under 37 CFR 1.182 on May 1, 2009, requesting that two terminal disclaimers filed in the subject application be withdrawn.

The petition is again **dismissed**.

The present petition requests that two terminal disclaimers filed in the above-identified application be withdrawn.

The petition is dismissed because it has been determined, for the reasons enumerated in the prior decision, that the terminal disclaimers do apply to at least one claim of record.

Further correspondence with respect to this matter should be addressed as follows:

By mail: Mail Stop Petition
Commissioner for Patents
P.O. Box 1450
Alexandria, VA 22313-1450

By FAX: (571) 273-8300
Attn: Office of Petitions

By hand: Customer Service Window
Mail Stop Petition
Randolph Building
401 Dulany Street

Alexandria, VA 22314

The application is being referred to Technology Center Art Unit 2624 for further processing.

Telephone inquires should be directed to the undersigned at 571.272.3231.

D Wood

Douglas Wood
Senior Petitions Attorney
Office of Petitions

UNITED STATES PATENT AND TRADEMARK OFFICE

COMMISSIONER FOR PATENTS
UNITED STATES PATENT AND TRADEMARK OFFICE
P.O. BOX 1450
ALEXANDRIA, VA 22313-1450
www.uspto.gov
DIW Nov-09

JOSEPH P. KRAUSE
5205 WASHINGTON STREET, SUITE 103
DOWNERS GROVE IL 60515

MAILED

NOV 05 2009

OFFICE OF PETITIONS

In re Application of	:	
Carl Cooper	:	
Application Number: 10/793882	:	ON PETITION
Filing Date: 06/10/2004	:	
Attorney Docket Number: CU-6907	:	

This is a decision on the twice renewed petition filed on September 22, 2009, which is treated as a petition under 37 CFR 1.182, requesting that two terminal disclaimers filed in the subject application be withdrawn.

The petition is **GRANTED to the extent indicated**.

The examiner has determined that the obviousness-type double patenting rejection is no longer applicable to claim in the application in regard to US Patent No. 6,870,964.

The petition is therefore **granted** with respect to the terminal disclaimer disclaiming the terminal part of the statutory term of any patent granted on the instant application which would extend beyond the expiration date of the full statutory term prior patent No. 6,870,964 as the term of said prior patent is defined in 35 U.S.C. 154 and 173, and as the term of said prior patent is presently shorted by any terminal disclaimer.

The petition is **not** granted, however, with respect to the terminal disclaimer disclaiming the terminal part of the statutory term of any patent granted on the instant application which would extend beyond the expiration date of the full statutory term prior patent No. 5,424,780 as the term of said prior patent is defined in 35 U.S.C. 154 and 173, and as the term of said prior patent is presently shorted by any terminal disclaimer.

Further correspondence with respect to this matter should be addressed as follows:

By mail: Mail Stop Petition
Commissioner for Patents
P.O. Box 1450
Alexandria, VA 22313-1450

By FAX: (571) 273-8300
Attn: Office of Petitions

By hand: Customer Service Window
Mail Stop Petition
Randolph Building
401 Dulany Street
Alexandria, VA 22314

This application is being referred to Technology Center Art Unit 2624 for correction of PALM and file records consistent with this decision.

Telephone inquires should be directed to the undersigned at 571.272.3231.

D Wood

Douglas Wood
Senior Petitions Attorney
Office of Petitions

UNITED STATES PATENT AND TRADEMARK OFFICE

Commissioner for Patents
United States Patent and Trademark Office
P.O. Box 1450
Alexandria, VA 22313-1450
www.uspto.gov

JOSEPH P. KRAUSE
1000 JORIE BLVD., SUITE 144
OAK BROOK, IL 60523

MAILED

MAR 29 2010

OFFICE OF PETITIONS

In re Application of
Carl Cooper
Application No. 10/793,882
Filed: June 10, 2004
Attorney Docket No. 3828.002

ON PETITION

This is a decision on the petition, filed March 25, 2010 under 37 CFR 1.313(c)(2) to withdraw the above-identified application from issue after payment of the issue fee.

The petition is **GRANTED**.

The above-identified application is withdrawn from issue for consideration of a submission under 37 CFR 1.114 (request for continued examination). See 37 CFR 1.313(c)(2).

Petitioner is advised that the issue fee paid on January 29, 2010 in the above-identified application cannot be refunded. If, however, the above-identified application is again allowed, petitioner may request that it be applied towards the issue fee required by the new Notice of Allowance.[1]

Telephone inquiries should be directed to Irvin Dingle at (571) 272-3210.

This matter is being referred to Technology Center AU 2624 for processing of the request for continued examination under 37 CFR 1.114 and for consideration of the concurrently filed Information Disclosure Statement.

/Irvin Dingle/
Irvin Dingle
Petitions Examiner
Office of Petitions

---

[1] The request to apply the issue fee to the new Notice may be satisfied by completing and returning the new Issue Fee Transmittal Form PTOL-85(b), which includes the following language thereon: Commissioner for Patents is requested to apply the Issue Fee and Publication Fee (if any) or re-apply any previously paid issue fee to the application identified above. Petitioner is advised that, whether a fee is indicated as being due or not, the Issue Fee Transmittal Form **must** be completed and timely submitted to avoid abandonment. Note the language in bold text on the first page of the Notice of Allowance and Fee(s) Due (PTOL-85).

UNITED STATES PATENT AND TRADEMARK OFFICE

Commissioner for Patents
United States Patent and Trademark Office
P.O. Box 1450
Alexandria, VA 22313-1450
www.uspto.gov

wk

Mailed: 8-9-07

In re application of	:	
Takeshi Kijima et al.	:	DECISION ON
Serial No. 10/793,889	:	PETITION
Filed: March 08, 2004	:	
For: Ceramic Film Manufacturing Method, Ferroelectric Capacitor Manufacturing Method, Ceramic Film, Ferroelectirc Capacitor, and Semiconductor Device	:	

This is a decision on the petition filed on March 12, 2007. The petition requests to reset the period of reply of an office action.

Applicants never received an Office Action dated February 7, 2007. The final Rejection was mailed and it appears to have returned to the US Patent Office. A review of the file shows that the mailing address is correct.

DECISION

The instant petition is accepted as a petition under 37 CFR 1.181(no fee).

The petition is **GRANTED**.

The final office action will be remailed and the time for reply restarted.

Jacqueline M. Stone/wk

Jacqueline M. Stone, Director
Technology Center 1700
Chemical and Materials Engineering

Jeffrey R. Bousquet
OLIFF & BERRIDGE, PLC
P.O. BOX 19928
ALEXANDRIA VA 22320

UNITED STATES PATENT AND TRADEMARK OFFICE

UNITED STATES DEPARTMENT OF COMMERCE
United States Patent and Trademark Office
Address: COMMISSIONER FOR PATENTS
P.O. Box 1450
Alexandria, Virginia 22313-1450
www.uspto.gov

APPLICATION NO.	FILING DATE	FIRST NAMED INVENTOR	ATTORNEY DOCKET NO.	CONFIRMATION NO.
10/793,926	03/08/2004	Norifumi Yamada	249936US0	8764

22850 7590 02/22/2010
OBLON, SPIVAK, MCCLELLAND MAIER & NEUSTADT, L.L.P.
1940 DUKE STREET
ALEXANDRIA, VA 22314

EXAMINER
SORKIN, DAVID L

ART UNIT	PAPER NUMBER
1797	

NOTIFICATION DATE	DELIVERY MODE
02/22/2010	ELECTRONIC

Please find below and/or attached an Office communication concerning this application or proceeding.

The time period for reply, if any, is set in the attached communication.

Notice of the Office communication was sent electronically on above-indicated "Notification Date" to the following e-mail address(es):

patentdocket@oblon.com
oblonpat@oblon.com
jgardner@oblon.com

UNITED STATES PATENT AND TRADEMARK OFFICE

Commissioner for Patents
United States Patent and Trademark Office
P.O. Box 1450
Alexandria, VA 22313-1450
www.uspto.gov

FEB 2 2 2010

wk

Mailed :
In re Application of
Yamada et al.
Serial No. 10/793,926
Filed: March 8, 2004
For: Batch Mixer

DECISION ON PETITION

This is a decision on Appellants' Petition under 37 CFR 1.181 to withdrawal the Examiner's Answer dated December 4, 2009 and to issue a new Examiner's Answer identifying a "New Ground of Rejection".

The Examiner's Answer cites two additional references that were not of record previously during prosecution of the application. The Examiner's assertion was that the references were cited to document well-know properties of wood. One of the references was an article published in Wood Science and Technology that was used as evidence that wood is a viscoelastic material.

Appellants assert that the Examiner cites wood as a viscoelastic material for the first time in the Examiner's Answer. Appellants assert that since the Examiner has not previously replied to Applicants arguments by asserting that wood is a viscoelastic material, even though the Examiner had an opportunity to do so, " Appellants has not been given a fair opportunity to react to" this point to the filing of the appeal.

A review of the record indicates that the Appellants' request has merit.

DECISION

The petition is **GRANTED**.

The Examiner is directed to issue a new Examiner's Answer identifying a "New Ground of Rejection".

/Jacqueline M. Stone/

Jacqueline M. Stone, Director
Technology Center 1700
Chemical and Materials Engineering

Robert T. Pous

OBLON, SPIVAK, MCCLELLAND MAIER & NEUSTADT, L.L.P.
1940 DUKE STREET
ALEXANDRIA VA 22314

UNITED STATES PATENT AND TRADEMARK OFFICE

UNITED STATES DEPARTMENT OF COMMERCE
United States Patent and Trademark Office
Address: COMMISSIONER FOR PATENTS
P.O. Box 1450
Alexandria, Virginia 22313-1450
www.uspto.gov

ROYLANCE, ABRAMS, BERDO & GOODMAN, L.L.P.
1300 19TH STREET, N.W.
SUITE 600
WASHINGTON,, DC 20036

Mail Date: 04/21/2010

Applicant	: Sang-Hyuck Ha	: DECISION ON REQUEST FOR
Patent Number	: 7639659	: RECALCULATION of PATENT
Issue Date	: 12/29/2009	: TERM ADJUSTMENT IN VIEW
Appliction No	: 10/793,934	: OF WYETH AND NOTICE OF INTENT TO
Filed	: 03/08/2004	: ISSUE CERTIFICATE OF CORRECTION
		:

The Request for Recalculation is **GRANTED** to the extent indicated.

The patent term adjustment has been determined to be **1563** days. The USPTO will *sua sponte* issue a certificate of correction reflecting the amount of PTA days determined by the recalculation.

Prior to the issuance of the certificate of correction, the USPTO will afford patentee an opportunity to be heard and request reconsideration. Accordingly, patentee has **one month or thirty (30) days**, whichever is longer, to file a request for reconsideration of this patent term adjustment calculation. See 35 U.S.C. 154(b)(3)(B)(ii) and 37 CFR 1.322(a)(4). No extensions of time will be granted under 37 CFR 1.136.

Patentee should use document code PET.OP if electronically filing a request for reconsideration of this patent term adjustment calculation. The patentee must also include the information required by 37 CFR 1.705(b)(2) and the fee required by 37 CFR 1.18(e). If patentee does not file a timely request for reconsideration of this patent term adjustment calculation including the information required by 37 CFR 1.705(b)(2) and the fee required by 37 CFR 1.18(e), the USPTO will issue a certificate of correction reflecting the PTA determination noted above.

Patentee should be aware that in order to preserve the right to review in the United States District Court for the District of Columbia of the USPTO patent term adjustment determination, patentee must ensure that he or she also take the steps required under 35 U.S.C. 154(b)(4)(A) in a timely manner. Nothing in the request for recalculation should be construed as providing an alternative time frame for commencing a civil action under 35 U.S.C. 154(b)(4)(A).

Any questions concerning this decision should be directed to the Office of Patent Legal Administration at 571-272-7702.

UNITED STATES PATENT AND TRADEMARK OFFICE

Commissioner for Patents
United States Patent and Trademark Office
P.O. Box 1450
Alexandria, VA 22313-1450
www.uspto.gov

TRANSPACIFIC LAW GROUP
617 NORTH DELAWARE STREET
SAN MATEO CA 94401

COPY MAILED

APR 26 2007

OFFICE OF PETITIONS

In re Application of

CHOU, Peilin
Application No. 10/793,959
Filed: March 04, 2004
Attorney Docket No. **N0130/PP/HH**

DECISION ON PETITION
TO WITHDRAW
FROM RECORD

This is a decision on the Request to Withdraw as attorney or agent of record under 37 C.F.R. § 1.36(b), filed February 22, 2007.

The request is **NOT APPROVED**.

A grantable request to withdraw as attorney/agent of record must be signed by every attorney/agent seeking to withdraw or contain a clear indication that one attorney is signing on behalf of another/others. A request to withdraw will not be approved unless at least 30 (thirty) days would remain between the date of approval and the later of the expiration date of a time to file a response or the expiration date of the maximum time period which can be extended under 37 C.F.R. § 1.136(a).

The request cannot be approved because no reasons for withdrawal have been provided. The Office cannot, at this time, determine whether practitioner's request is one of the mandatory or permissive reasons enumerated in 37 CFR 10.40. Any subsequent requests must include reasons for withdrawal. Please note that there is a space provided for on PTO/SB/83 (Request to Withdraw as Attorney or Agent) to supply practitioner's reasons.

All future communications from the Office will continue to be directed to the above-listed address until otherwise notified by applicant.

Telephone inquiries concerning this decision should be directed to Michelle R Eason at 571-272- 4231.

Terri Williams

Terri Williams
Petitions Examiner
Office of Petitions

cc: **VENABLE LLP**
RAYMOND J. HO
575 7TH STREET NW
WASHINGTON, DC 20004-1601

UNITED STATES PATENT AND TRADEMARK OFFICE

Commissioner for Patents
United States Patent and Trademark Office
P.O. Box 1450
Alexandria, VA 22313-1450
www.uspto.gov

Chun-Pok Leung
TOWNSEND and TOWNSEND and CREW LLP
Two Embarcadero Center, 8th Floor
San Francisco, California 94111-3834

MAILED
MAR 2 3 2006
TECHNOLOGY CENTER 2100

In re Application of:
Yoji SUNADA et al
Application No. 10/793,961
Filed: March 4, 2004
For: INFORMATION PROCESSING SYSTEM AND INFORMATION PROCESSING DEVICE

DECISION ON PETITION TO MAKE SPECIAL

This is a decision on the petition, filed on 04 August 2005 under 37 C.F.R. §102(d) and M.P.E.P. § 708.02(VIII): Accelerated Examination, to make the above-identified application special.

The petition is **GRANTED**.

M.P.E.P. § 708.02, Section VIII which sets out the prerequisites for a grantable petition for Accelerated Examination under 37 C.F.R. § 102(d) states in relevant part:

> A new application (one which has not received any examination by the examiner) may be granted special status provided that applicant (and this term includes applicant's attorney or agent) complies with each of the following items:
>
> (A) Submits a petition to make special accompanied by the fee set forth in 37 CFR 1.17(h);
>
> (B) Presents all claims directed to a single invention, or if the Office determines that all the claims presented are not obviously directed to a single invention, will make an election without traverse as a prerequisite to the grant of special status;
>
> (C) Submits a statement(s) that a pre-examination search was made, listing the field of search by class and subclass, publication, Chemical Abstracts, foreign patents, etc. A search made by a foreign patent office satisfies this requirement;
>
> (D) Submits one copy each of the references deemed most closely related to the subject matter encompassed by the claims if said references are not already of record; and
>
> (E) Submits a detailed discussion of the references, which discussion points out, with the particularity required by 37 CFR 1.111 (b) and (c), how the claimed subject matter is patentable over the references.

Applicant's submission of 04 August 2005 meets all the criteria set out above. Accordingly, the petition is **GRANTED**. The application file is being forwarded to the

Examiner for accelerated examination in accordance with M.P.E.P. § 708.02. If the application is subsequently allowed, it will be given priority for printing. See M.P.E.P. § 1309.

Vincent N. Trans
Special Program Examiner
Technology Center 2100
Computer Architecture, Software, and
Information Security
571-272-3613

20 MAR 2006

UNITED STATES PATENT AND TRADEMARK OFFICE

Commissioner for Patents
United States Patent and Trademark Office
P.O. Box 1450
Alexandria, VA 22313-1450
www.uspto.gov

ALTERA LAW GROUP, LLC
6500 CITY WEST PARKWAY
SUITE 100
MINNEAPOLIS MN 55344-7704

In re Application of	:
PRUDNIKOV et al.	:
Application No. 10/793,980	: DECISION ON PETITION
Filed: March 5, 2004	: UNDER 37 CFR 1.78(a)(3)
Attorney Docket No. 3330.2-US-I1	:

This is a decision on the petition under 37 CFR 1.78(a)(3), filed 17 October 2005 to accept an unintentionally delayed claim under 35 U.S.C. § 120 for the benefit of priority to the prior-filed nonprovisional application set forth in the amendment filed concurrently with the instant petition.

The petition is **GRANTED**.

The present nonprovisional application was filed after November 29, 2000, and the claim herein for the benefit of priority to the prior-filed nonprovisional applications is submitted after expiration of the period specified in 37 CFR 1.78(a)(2)(ii). Therefore, this is a proper petition under 37 CFR 1.78(a)(3).

A petition for acceptance of a claim for late priority under 37 CFR 1.78(a)(3) is only applicable to those applications filed on or after November 29, 2000. Further, the petition is appropriate only after the expiration of the period specified in 37 CFR 1.78(a)(2)(ii). In addition, the petition under 37 CFR 1.78(a)(3) must be accompanied by:

(1) the reference required by 35 U.S.C. § 120 and 37 CFR 1.78(a)(2)(i) of the prior-filed application, unless previously submitted;

(2) the surcharge set forth in § 1.17(t); and

(3) a statement that the entire delay between the date the claim was due under 37 CFR 1.78(a)(2)(ii) and the date the claim was filed was unintentional. The Director may require additional information where there is a question whether the delay was unintentional.

The petition complies with the requirements for a grantable petition under 37 CFR 1.78(a)(3) in that (1) a reference to the prior-filed nonprovisional application has been included in an amendment to the first sentence of the specification following the title, as provided by 37 CFR 1.78(a)(2)(iii); (2) the surcharge fee required by 37 CFR 1.17(t) has

been charged to applicant's deposit account; and (3) the petition contains a proper statement of unintentional delay. Accordingly, having found that the instant petition for acceptance of an unintentionally delayed claim for the benefit of priority under 35 U.S.C. § 120 to the prior-filed nonprovisional application satisfies the conditions of 37 CFR 1.78(a)(3), the petition is granted.

The granting of the petition to accept the delayed benefit claim to the prior-filed application under 37 CFR 1.78(a)(3) should not be construed as meaning that this application is entitled to the benefit of the prior-filed application. In order for this application to be entitled to the benefit of the prior-filed applications, all other requirements under 35 U.S.C. § 120 and 37 CFR 1.78(a)(1) and (a)(2) must be met. Similarly, the fact that the corrected Filing Receipt accompanying this decision on petition includes the prior-filed applications should not be construed as meaning that applicant is entitled to the claim for benefit of priority to the prior-filed applications noted thereon. Accordingly, the examiner will, in due course, consider this benefit claim and determine whether this application is entitled to the benefit of the earlier filing date.

A corrected Filing Receipt, which includes the priority claim to the prior-filed nonprovisional application, accompanies this decision on petition.

Any inquiries concerning this decision may be directed to Cynthia Kratz at (571) 272-3286. All other inquiries concerning either the examination procedures or status of the application should be directed to the Technology Center.

This matter is being referred to Technology Center Art Unit 3731 for appropriate action on the amendment filed 17 October 2005, including consideration by the examiner of applicant's entitlement to claim benefit of priority under 35 U.S.C. § 120 to the prior-filed nonprovisional applications.

Boris Milef
Legal Examiner
Office of Petitions and
Office of PCT Legal Administration

ATTACHMENT: Corrected Filing Receipt

UNITED STATES PATENT AND TRADEMARK OFFICE

UNITED STATES DEPARTMENT OF COMMERCE
United States Patent and Trademark Office
Address: COMMISSIONER FOR PATENTS
P.O. Box 1450
Alexandria, Virginia 22313-1450
www.uspto.gov

APPL NO.	FILING OR 371 (c) DATE	ART UNIT	FIL FEE REC'D	ATTY.DOCKET NO	DRAWINGS	TOT CLMS	IND CLMS
10/793,990	03/04/2004	1742	1162	2003-0766.00/US	8	37	4

CONFIRMATION NO. 7977

CORRECTED FILING RECEIPT

OC000000014675819

David J. Paul
Micron Technology, Inc.
MS 1-525
8000 S Federal Way
Boise, ID 83716

Date Mailed: 12/06/2004

Receipt is acknowledged of this regular Patent Application. It will be considered in its order and you will be notified as to the results of the examination. Be sure to provide the U.S. APPLICATION NUMBER, FILING DATE, NAME OF APPLICANT, and TITLE OF INVENTION when inquiring about this application. Fees transmitted by check or draft are subject to collection. Please verify the accuracy of the data presented on this receipt. **If an error is noted on this Filing Receipt, please write to the Office of Initial Patent Examination's Filing Receipt Corrections, facsimile number 703-746-9195. Please provide a copy of this Filing Receipt with the changes noted thereon. If you received a "Notice to File Missing Parts" for this application, please submit any corrections to this Filing Receipt with your reply to the Notice. When the USPTO processes the reply to the Notice, the USPTO will generate another Filing Receipt incorporating the requested corrections (if appropriate).**

Applicant(s)

Chandra S. Tiwari, Boise, ID;

Power of Attorney: The patent practitioners associated with Customer Number **3624**.

Domestic Priority data as claimed by applicant

Foreign Applications

If Required, Foreign Filing License Granted: 05/26/2004

The country code and number of your priority application, to be used for filing abroad under the Paris Convention, is US10/793,990

Projected Publication Date: 09/08/2005

Non-Publication Request: No

Early Publication Request: No

Title

Self-activated electroless metal deposition

Preliminary Class

205

LICENSE FOR FOREIGN FILING UNDER
Title 35, United States Code, Section 184
Title 37, Code of Federal Regulations, 5.11 & 5.15

GRANTED

The applicant has been granted a license under 35 U.S.C. 184, if the phrase "IF REQUIRED, FOREIGN FILING LICENSE GRANTED" followed by a date appears on this form. Such licenses are issued in all applications where the conditions for issuance of a license have been met, regardless of whether or not a license may be required as set forth in 37 CFR 5.15. The scope and limitations of this license are set forth in 37 CFR 5.15(a) unless an earlier license has been issued under 37 CFR 5.15(b). The license is subject to revocation upon written notification. The date indicated is the effective date of the license, unless an earlier license of similar scope has been granted under 37 CFR 5.13 or 5.14.

This license is to be retained by the licensee and may be used at any time on or after the effective date thereof unless it is revoked. This license is automatically transferred to any related applications(s) filed under 37 CFR 1.53(d). This license is not retroactive.

The grant of a license does not in any way lessen the responsibility of a licensee for the security of the subject matter as imposed by any Government contract or the provisions of existing laws relating to espionage and the national security or the export of technical data. Licensees should apprise themselves of current regulations especially with respect to certain countries, of other agencies, particularly the Office of Defense Trade Controls, Department of State (with respect to Arms, Munitions and Implements of War (22 CFR 121-128)); the Office of Export Administration, Department of Commerce (15 CFR 370.10 (j)); the Office of Foreign Assets Control, Department of Treasury (31 CFR Parts 500+) and the Department of Energy.

NOT GRANTED

No license under 35 U.S.C. 184 has been granted at this time, if the phrase "IF REQUIRED, FOREIGN FILING LICENSE GRANTED" DOES NOT appear on this form. Applicant may still petition for a license under 37 CFR 5.12, if a license is desired before the expiration of 6 months from the filing date of the application. If 6 months has lapsed from the filing date of this application and the licensee has not received any indication of a secrecy order under 35 U.S.C. 181, the licensee may foreign file the application pursuant to 37 CFR 5.15(b).

UNITED STATES PATENT AND TRADEMARK OFFICE

UNITED STATES DEPARTMENT OF COMMERCE
United States Patent and Trademark Office
Address: COMMISSIONER FOR PATENTS
P.O. Box 1450
Alexandria, Virginia 22313-1450
www.uspto.gov

HAYNES BEFFEL & WOLFELD LLP
P O BOX 366
HALF MOON BAY, CA 94019

Mail Date: 04/21/2010

Applicant	: George L. Burne	: DECISION ON REQUEST FOR
Patent Number	: 7656895	: RECALCULATION of PATENT
Issue Date	: 02/02/2010	: TERM ADJUSTMENT IN VIEW
Appliction No	: 10/794,004	: OF WYETH AND NOTICE OF INTENT TO
Filed	: 03/04/2004	: ISSUE CERTIFICATE OF CORRECTION
		:

The Request for Recalculation is **GRANTED** to the extent indicated.

The patent term adjustment has been determined to be **1625** days. The USPTO will *sua sponte* issue a certificate of correction reflecting the amount of PTA days determined by the recalculation.

Prior to the issuance of the certificate of correction, the USPTO will afford patentee an opportunity to be heard and request reconsideration. Accordingly, patentee has **one month or thirty (30) days**, whichever is longer, to file a request for reconsideration of this patent term adjustment calculation. See 35 U.S.C. 154(b)(3)(B)(ii) and 37 CFR 1.322(a)(4). No extensions of time will be granted under 37 CFR 1.136.

Patentee should use document code PET.OP if electronically filing a request for reconsideration of this patent term adjustment calculation. The patentee must also include the information required by 37 CFR 1.705(b)(2) and the fee required by 37 CFR 1.18(e). If patentee does not file a timely request for reconsideration of this patent term adjustment calculation including the information required by 37 CFR 1.705(b)(2) and the fee required by 37 CFR 1.18(e), the USPTO will issue a certificate of correction reflecting the PTA determination noted above.

Patentee should be aware that in order to preserve the right to review in the United States District Court for the District of Columbia of the USPTO patent term adjustment determination, patentee must ensure that he or she also take the steps required under 35 U.S.C. 154(b)(4)(A) in a timely manner. Nothing in the request for recalculation should be construed as providing an alternative time frame for commencing a civil action under 35 U.S.C. 154(b)(4)(A).

Any questions concerning this decision should be directed to the Office of Patent Legal Administration at 571-272-7702.

UNITED STATES PATENT AND TRADEMARK OFFICE

Commissioner for Patents
United States Patent and Trademark Office
P.O. Box 1450
Alexandria, VA 22313-1450
www.uspto.gov

YAHOO C/O MOFO PALO ALTO
755 PAGE MILL ROAD
PALO ALTO, CA 94304

MAILED

MAY 13 2010

OFFICE OF PETITIONS

In re Application of	:	
Mukherjee et al.	:	DECISION ON PETITION
Application No. 10/794,006	:	TO WITHDRAW
Filed: March 4, 2004	:	FROM RECORD
Attorney Docket No. 085804-700200	:	

This is a decision on the Request to Withdraw as attorney or agent of record under 37 C.F.R. § 1.36(b), filed March 17, 2010.

The request is **NOT APPROVED** because it is moot.

A review of the file record indicates that on May 7, 2010 the power of attorney to YAHOO C/O MOFO PALO ALTO was revoked by the assignee of the patent application. Accordingly, the request to withdraw under 37 C.F.R. § 1.36(b) is moot.

All future communications from the Office will be directed to the below-listed address until otherwise notified by applicant.

Telephone inquires concerning this decision should be directed to the undersigned at 571-272- 7751. All other inquires concerning either the examination or status of the application should be directed to the Technology Center.

Joan Olszewski
Petitions Examiner
Office of Petitions

cc: YAHOO! INC. C/O GREENBERG TRAURIG, LLP
MET LIFE BUILDING
200 PARK AVENUE
NEW YORK NY 10166

UNITED STATES PATENT AND TRADEMARK OFFICE

Commissioner for Patents
United States Patent and Trademark Office
P.O. Box 1450
Alexandria, VA 22313-1450
www.uspto.gov

STALLMAN & POLLOCK LLP
SUITE 2200
353 SACRAMENTO STREET
SAN FRANCISCO CA 94111

COPY MAILED

AUG 1 8 2005

OFFICE OF PETITIONS

In re Application of	:	
Stack et al.	:	
Application No. 10/794,007	:	DECISION ON PETITION
Filed: March 4, 2004	:	
Attorney Docket No. BARO-212	:	

This is a decision on the petition under 37 CFR §1.137(b), filed June 20, 2005.

This above-identified application became abandoned for failure to timely file a proper response to a final Office Action which was mailed on December 8, 2004. The final Office Action set a three (3) month shortened statutory period for reply. No extension of time were obtained under the provisions of 37 CFR §1.136(a). Accordingly, this application became abandoned on March 9, 2005. This decision precedes the mailing of a Notice of Abandonment.

The requirements for a grantable petition under 37 CFR §1.137(b) have been met. This petition is hereby **Granted**.

The Request for Continued Examination (RCE), and the amendment submitted with the instant petition will be forwarded to Technology Center 3700 for further processing.

Telephone inquiries concerning this matter should be directed to the undersigned at (571) 272-3215.

Charlema R. Grant

Charlema R. Grant
Petitions Attorney
Office of Petitions

United States
Patent And
Trademark Office

P.O. Box 1450, Alexandria, Virginia 22313-1450 – www.uspto.gov

PETITION DECISION

05/24/04

Natasha C. Us
Testa, Hurwitz, & Thibeault, LLP
High Street Tower, 125 High Street
Boston, Ma 02110

Dear Applicant:

The Box PG Pub replacement drawings for application number 10/794010 received on 05/03/04 by the U. S. Patent and Trademark Office will be included for patent publication.

Telephone inquiries should be directed to Kaletus King, Office of Pre-Grant Publication 703 605-4283.

Kaletus King

Signature of Reviewer, Office of Pre-Grant Publication

UNITED STATES PATENT AND TRADEMARK OFFICE

UNITED STATES DEPARTMENT OF COMMERCE
United States Patent and Trademark Office
Address: COMMISSIONER FOR PATENTS
P.O. Box 1450
Alexandria, Virginia 22313-1450
www.uspto.gov

WHYTE HIRSCHBOECK DUDEK S.C./WARF
INTELLECTUAL PROPERTY DEPARTMENT
555 East Wells Street, Suite 1900
Milwaukee, WI 53202

Mail Date: 04/20/2010

Applicant	: Andrew J. Taylor	: DECISION ON REQUEST FOR
Patent Number	: 7582283	: RECALCULATION of PATENT
Issue Date	: 09/01/2009	: TERM ADJUSTMENT IN VIEW
Appliction No	: 10/794,043	: OF WYETH AND NOTICE OF INTENT TO
Filed	: 03/05/2004	: ISSUE CERTIFICATE OF CORRECTION
		:

The Request for Recalculation is **GRANTED** to the extent indicated.

The patent term adjustment has been determined to be **1384** days. The USPTO will *sua sponte* issue a certificate of correction reflecting the amount of PTA days determined by the recalculation.

Prior to the issuance of the certificate of correction, the USPTO will afford patentee an opportunity to be heard and request reconsideration. Accordingly, patentee has **one month or thirty (30) days**, whichever is longer, to file a request for reconsideration of this patent term adjustment calculation. See 35 U.S.C. 154(b)(3)(B)(ii) and 37 CFR 1.322(a)(4). No extensions of time will be granted under 37 CFR 1.136.

Patentee should use document code PET.OP if electronically filing a request for reconsideration of this patent term adjustment calculation. The patentee must also include the information required by 37 CFR 1.705(b)(2) and the fee required by 37 CFR 1.18(e). If patentee does not file a timely request for reconsideration of this patent term adjustment calculation including the information required by 37 CFR 1.705(b)(2) and the fee required by 37 CFR 1.18(e), the USPTO will issue a certificate of correction reflecting the PTA determination noted above.

Patentee should be aware that in order to preserve the right to review in the United States District Court for the District of Columbia of the USPTO patent term adjustment determination, patentee must ensure that he or she also take the steps required under 35 U.S.C. 154(b)(4)(A) in a timely manner. Nothing in the request for recalculation should be construed as providing an alternative time frame for commencing a civil action under 35 U.S.C. 154(b)(4)(A).

Any questions concerning this decision should be directed to the Office of Patent Legal Administration at 571-272-7702.

UNITED STATES PATENT AND TRADEMARK OFFICE

COMMISSIONER FOR PATENTS
UNITED STATES PATENT AND TRADEMARK OFFICE
P.O. BOX 1450
ALEXANDRIA, VA 22313-1450
www.uspto.gov

MICHAEL TAVELLA
2051 BRIGADIER DRIVE
ANCHORAGE, AK 99507

COPY MAILED

MAY 02 2007

OFFICE OF PETITIONS

In re Application of	:	
KIRK	:	
Application No.: 10/794,069	:	DECISION ON PETITION
Filing Date: March 4, 2004	:	UNDER 37 CFR 1.137(B)
Attorney Docket No.: ER966173828US	:	

This is a decision on the petition under 37 CFR 1.137(b), filed September 11, 2006, to revive the above-identified application.

The petition is **GRANTED.**

The above-identified application became abandoned for failure to submit the issue fee and publication fee in a timely manner in reply to the Notice of Allowance mailed April 11, 2006, which set a statutory period for reply of three (3) months. Accordingly, by operation of law, the above-identified application became abandoned on July 12, 2006.

The petition satisfies the conditions for revival pursuant to the provisions of 37 CFR 1.137(b) in that (1) the reply in the form of payment of the issue fee and publication fee; (2) the petition fee; and (3) the required statement of unintentional delay have been received. Accordingly, the payment of the issue fee and publication fee is accepted as having been unintentionally delayed.

This application is being referred to the Office of Publications.

Telephone inquiries concerning this decision should be directed to the undersigned at (571) 272-3303.

Bryan Lin

Bryan Lin
Legal Examiner
Office of the Deputy Commissioner
for Patent Examination Policy

OIPE JC42
JUN 07 2004
PATENT & TRADEMARK OFFICE

FILE COPY

IN THE UNITED STATES PATENT AND TRADEMARK OFFICE
BEFORE THE PRIMARY EXAMINER

In re Patent Application

Serial Number	10/794,070	
Filed	March 4, 2004	
Entitled	Process and Apparatus for Manufacturing Metal Oxides and Byproduct Hydrogen	Art Unit ~~1754~~ 1753 Phase
Inventors	Romuald Drlik and Gary C. Waldeck	
Assignee	Spheric Technologies, Inc.	
Attorney Docket Number	787-P-1-USA	

PETITION GRANTED
William Krynski
Special Program Examiner
TC 1700
FEB 18 2005

PETITION TO MAKE SPECIAL
37 CFR 1.102(d)
MPEP 708.02 VIII

Mail Stop Petition to Make Special
Box: FEE
Commissioner for Patents
P.O. Box 1450
Alexandria, VA 22313-1450

Sir:

Applicants by their undersigned attorney hereby petition the Commissioner to advance the above-identified application for examination.

In support of this Petition, Applicant's undersigned attorney respectfully shows the Commissioner:

06/10/2004 JADDO1 00000020 10794080
01 FC:1460 130.00 OP

UNITED STATES PATENT AND TRADEMARK OFFICE

Commissioner for Patents
United States Patent and Trademark Office
P.O. Box 1450
Alexandria, VA 22313-1450
www.uspto.gov

SIEMENS CORPORATION
INTELLECTUAL PROPERTY DEPARTMENT
170 WOOD AVENUE SOUTH
ISELIN NJ 08830

COPY MAILED
AUG 17 2006
OFFICE OF PETITIONS

In re Application of	:	
Perry, et al.	:	
Application No. 10/794,087	:	ON PETITION
Filed: March 8, 2004	:	
Attorney Docket No. 2003P03304US01	:	

This is a decision on the petition under 37 CFR 1.137(b), filed February 6, 2006.

The petition is **GRANTED**.

The above-identified application became abandoned for failure to timely file a reply to the Notice of Drawing Inconsistency with Specification, mailed October 24, 2005, which set a non-extendable period for reply of thirty days for applicants to correct the specification. No reply to the Notice having been received, the application became abandoned on November 25, 2005. A Notice of Abandonment was mailed on January 9, 2006.

With the instant petition, petitioner paid the petition fee, made the proper statement of unintentional delay, and submitted an amendment to the specification, adding reference to drawing Figures 3 and 4.

The application file is being forwarded to the Office of Patent Publication for processing into a patent.

Telephone inquiries regarding this decision should be directed to the undersigned at (571)272-3207.

Cliff Congo
Petitions Attorney
Office of Petitions

UNITED STATES PATENT AND TRADEMARK OFFICE

UNITED STATES DEPARTMENT OF COMMERCE
United States Patent and Trademark Office
Address: COMMISSIONER FOR PATENTS
P.O. Box 1450
Alexandria, Virginia 22313-1450
www.uspto.gov

SCHWEGMAN, LUNDBERG & WOESSNER/WMS GAMING
P.O. BOX 2938
MINNEAPOLIS, MN 55402

Mail Date: 05/21/2010

Applicant	: Edward A. McKinley	: DECISION ON REQUEST FOR
Patent Number	: 7641555	: RECALCULATION of PATENT
Issue Date	: 01/05/2010	: TERM ADJUSTMENT IN VIEW
Application No	: 10/794,098	: OF WYETH AND NOTICE OF INTENT TO
Filed	: 03/04/2004	: ISSUE CERTIFICATE OF CORRECTION
		:

The Request for Recalculation is **GRANTED** to the extent indicated.

The patent term adjustment has been determined to be **1239** days. The USPTO will *sua sponte* issue a certificate of correction reflecting the amount of PTA days determined by the recalculation.

Prior to the issuance of the certificate of correction, the USPTO will afford patentee an opportunity to be heard and request reconsideration. Accordingly, patentee has **one month or thirty (30) days**, whichever is longer, to file a request for reconsideration of this patent term adjustment calculation. See 35 U.S.C. 154(b)(3)(B)(ii) and 37 CFR 1.322(a)(4). No extensions of time will be granted under 37 CFR 1.136.

Patentee should use document code PET.OP if electronically filing a request for reconsideration of this patent term adjustment calculation. The patentee must also include the information required by 37 CFR 1.705(b)(2) and the fee required by 37 CFR 1.18(e). If patentee does not file a timely request for reconsideration of this patent term adjustment calculation including the information required by 37 CFR 1.705(b)(2) and the fee required by 37 CFR 1.18(e), the USPTO will issue a certificate of correction reflecting the PTA determination noted above.

Patentee should be aware that in order to preserve the right to review in the United States District Court for the District of Columbia of the USPTO patent term adjustment determination, patentee must ensure that he or she also take the steps required under 35 U.S.C. 154(b)(4)(A) in a timely manner. Nothing in the request for recalculation should be construed as providing an alternative time frame for commencing a civil action under 35 U.S.C. 154(b)(4)(A).

Any questions concerning this decision should be directed to the Office of Patent Legal Administration at 571-272-7702.

SPE C. Tyler

SPE RESPONSE FOR CERTIFICATE OF CORRECTION

Paper No.: _____

DATE : 9/15/05

TO SPE OF : ART UNIT 3744

SUBJECT : Request for Certificate of Correction on Patent No.: 6925820

A response is requested with respect to the accompanying request for a certificate of correction.

Please complete this form and return with file, within 7 days to:
Palm location **7580, Certificates of Correction Branch – South Tower – 9A22**
If response is for an IFW, **return to employee (named below) via PUBSCofC Team in MADRAS.**
With respect to the change(s) requested, correcting Office and/or Applicant's errors, should the patent read as shown in the certificate of correction (COCIN)? No new matter should be introduced, nor should the scope or meaning of the claims be changed.

Thank You For Your Assistance

Lamonte M. Newsome
Certificates of Correction Branch
Tel. No. 703-305-8309

The request for issuing the above-identified correction(s) is hereby:
Note your decision on the appropriate box.

- ☑ **Approved** — **All** changes apply.
- ☐ **Approved in Part** — Specify below which changes **do not** apply.
- ☐ **Denied** — State the reasons for denial below.

Comments:

Cheryl J. Tyler — **SPE**

3744 — **Art Unit**

UNITED STATES PATENT AND TRADEMARK OFFICE

Commissioner for Patents
United States Patent and Trademark Office
P.O. Box 1450
Alexandria, VA 22313-1450
www.uspto.gov

JJGJR.: 08-07

Paper No:__

COPY MAILED

AUG 27 2007

OFFICE OF PETITIONS

BLAKELY SOKOLOFF
TAYLOR & ZAFMAN
1279 OAKMEAD PARKWAY
SUNNYVALE CA 94085-4040

In re Application of	:	
Park, et al.	:	DECISION
Application No. 10/794,143	:	
Filing Date: 4 March, 2004	:	
Attorney Docket No.: 2013P156	:	

This is a decision on the petition filed on 11 August, 2006, and properly considered as a request under 37 C.F.R. §1.181 for the withdrawal of the holding of abandonment.

The Office regrets the delay in addressing this matter, however, the instant petition was presented to the attorneys in the Office of Petitions only at this writing.[1]

For the reasons set forth below, the petitions as considered under 37 C.F.R. §1.181 are **GRANTED**.

BACKGROUND

The record indicates that:

- Petitioner failed to reply timely and properly to Notice of Allowance/Allowability and

[1] **NOTE: Monitoring of the status of applications on PAIR can inform one's management of application responses and provide an indication when mailings of Office actions should be expected. Status Inquiries filed at three (3) or four (4) month intervals provide a demonstration of diligence and attention in supporting a petition seeking relief under 37 C.F.R. §1.181.**

Fees Due mailed on 28 December, 2005, with reply due under a non-extendable deadline on or before 28 March, 2006;

- the application went abandoned by operation of law after midnight 28 March, 2006;
- the Office mailed the Notice of Abandonment on 19 July, 2006;
- on 11 August, 2006, Petitioner filed the instant petition, recited that a reply was timely submitted, and provided a copy of that reply with a statement complying with the practice set forth in the Commentary at MPEP §711.03 (c) (discussed below) as to the requisite support for such evidence by the person who signed the Certificate of Mailing/Transmission under 37 C.F.R. §1.8.

Petitioner may associate his application with his Customer Number so as to follow properly online the processing of the application.

Out of an abundance of caution, Petitioners always are reminded that the filing of a petition under 37 C.F.R. §1.181 does not toll any periods that may be running any action by the Office and a petition seeking relief under the regulation must be filed within two (2) months of the act complained of (see: 37 C.F.R. §1.181(f)); and those registered to practice *and* all others who make representations before the Office must inquire into the underlying facts of representations made to the Office and support averments with the appropriate documentation–since all owe to the Office the continuing duty to disclose.[2]

---

[2] See supplement of 17 June, 1999. The Patent and Trademark Office is relying on petitioner's duty of candor and good faith and accepting a statement made by Petitioner. See Changes to Patent Practice and Procedure, 62 Fed. Reg. at 53160 and 53178, 1203 Off. Gaz. Pat. Office at 88 and 103 (responses to comments 64 and 109)(applicant obligated under 37 C.F.R. §10.18 to inquire into the underlying facts and circumstances when providing statements to the Patent and Trademark Office).

Specifically, the regulations at 37 C.F.R. §10.18 provide:

§ 10.18 Signature and certificate for correspondence filed in the Patent and Trademark Office.
(a) For all documents filed in the Office in patent, trademark, and other non-patent matters, except for correspondence that is required to be signed by the applicant or party, each piece of correspondence filed by a practitioner in the Patent and Trademark Office must bear a signature by such practitioner complying with the provisions of §1.4(d), §1.4(e), or § 2.193(c)(1) of this chapter.
(b) By presenting to the Office (whether by signing, filing, submitting, or later advocating) any paper, the party presenting such paper, whether a practitioner or non-practitioner, is certifying that—

(1) All statements made therein of the party's own knowledge are true, all statements made therein on information and belief are believed to be true, and all statements made therein are made with the knowledge that whoever, in any matter within the jurisdiction of the Patent and Trademark Office, knowingly and willfully falsifies, conceals, or covers up by any trick, scheme, or device a material fact, or makes any false, fictitious or fraudulent statements or representations, or makes or uses any false writing or document knowing the same to contain any false, fictitious or fraudulent statement or entry, shall be subject to the penalties set forth under 18 U.S.C. 1001, and that violations of this paragraph may jeopardize the validity of the application or document, or the validity or enforceability of any patent, trademark registration, or certificate resulting therefrom; and

(2) To the best of the party's knowledge, information and belief, formed after an inquiry reasonable under the circumstances, that —

(i) The paper is not being presented for any improper purpose, such as to harass someone or to cause unnecessary delay or needless increase in the cost of prosecution before the Office;

(ii) The claims and other legal contentions therein are warranted by existing law or by a nonfrivolous argument for the extension, modification, or reversal of existing law or the establishment of new law;

(iii) The allegations and other factual contentions have evidentiary support or, if specifically so identified, are likely to have

STATUTES, REGULATIONS AND ANALYSIS

Congress has authorized the Commissioner to "revive an application if the delay is shown to the satisfaction of the Commissioner to have been "unavoidable." 35 U.S.C. §133 (1994).[3]

The regulations at 37 C.F.R. §1.137(a) and (b) set forth the requirements for a petitioner to revive a previously unavoidably or unintentionally, respectively, abandoned application under this congressional grant of authority. The language of 35 U.S.C. §133 and 37 C.F.R. §1.137(a) is clear, unambiguous, and without qualification: the delay in tendering the reply to the outstanding Office action, as well as filing the first petition seeking revival, must have been unavoidable for the reply now to be accepted on petition.[4]

Delays in responding properly raise the question whether delays are unavoidable.[5] Where there is a question whether the delay was unavoidable, Petitioners must meet the burden of establishing that the delay was unavoidable within the meaning of 35 U.S.C. §133 and 37 C.F.R. §1.137(a).[6] And the Petitioner must be diligent in attending to the matter.[7] Failure to do so does not

---

evidentiary support after a reasonable opportunity for further investigation or discovery; and

(iv) The denials of factual contentions are warranted on the evidence, or if specifically so identified, are reasonably based on a lack of information or belief.

(c) Violations of paragraph (b)(1) of this section by a practitioner or non-practitioner may jeopardize the validity of the application or document, or the validity or enforceability of any patent, trademark registration, or certificate resulting therefrom. Violations of any of paragraphs (b)(2)(i) through (iv) of this section are, after notice and reasonable opportunity to respond, subject to such sanctions as deemed appropriate by the Commissioner, or the Commissioner's designee, which may include, but are not limited to, any combination of—

(1) Holding certain facts to have been established;

(2) Returning papers;

(3) Precluding a party from filing a paper, or presenting or contesting an issue;

(4) Imposing a monetary sanction;

(5) Requiring a terminal disclaimer for the period of the delay; or

(6) Terminating the proceedings in the Patent and Trademark Office.

(d) Any practitioner violating the provisions of this section may also be subject to disciplinary action. See § 10.23(c)(15).

[Added 50 FR 5175, Feb. 6, 1985, effective Mar. 8, 1985; para. (a) revised, 58 FR 54494, Oct. 22, 1993, effective Nov. 22, 1993; paras. (a) & (b) revised, paras. (c) & (d) added, 62 FR 53131, Oct. 10, 1997, effective Dec. 1, 1997; para. (a) revised, 69 FR 56481, Sept. 21, 2004, effective Oct. 21, 2004]

[3] 35 U.S.C. §133 provides:

35 U.S.C. §133 Time for prosecuting application.

Upon failure of the applicant to prosecute the application within six months after any action therein, of which notice has been given or mailed to the applicant, or within such shorter time, not less than thirty days, as fixed by the Commissioner in such action, the application shall be regarded as abandoned by the parties thereto, unless it be shown to the satisfaction of the Commissioner that such delay was unavoidable.

[4] Therefore, by example, an unavoidable delay in the payment of the Filing Fee might occur if a reply is shipped by the US Postal Service, but due to catastrophic accident, the delivery is not made.

[5] See: *Changes to Patent Practice and Procedure*; *Final Rule Notice*, 62 *Fed. Reg.* at 53158-59 (October 10, 1997), 1203 *Off. Gaz. Pat. Office* at 86-87 (October 21, 1997).

[6] See: In re Application of G, 11 USPQ2d 1378, 1380 (Comm'r Pats. 1989).

[7] See: Diligence in Filing Petitions to Revive and Petitions to Withdraw the Holding of Abandonment, 1124 Off. Gaz. Pat. Office 33 (March 19, 1991). It was and is Petitioner's burden to exercise diligence in seeking either to have the holding of abandonment withdrawn or the application revived. See 1124 Off. Gaz. Pat. Office supra.

constitute the care required under Pratt, and so cannot satisfy the test for diligence and due care.

(By contrast, unintentional delays are those that do not satisfy the very strict statutory and regulatory requirements of unavoidable delay, and also, by definition, are not intentional.[8]))

Allegations as to the Request to
Withdraw the Holding of Abandonment

The courts have determined the construct for properly supporting a petition seeking withdrawal of a holding of abandonment.[9]

The commentary at MPEP §711.03(c) provides:

* * *

B. Petition To Withdraw Holding of Abandonment Based on Evidence That a Reply Was Timely Mailed or Filed

37 C.F.R. §1.10(c) through §1.10(e) and §1.10(g) set forth procedures for petitioning the Director of the USPTO to accord a filing date to correspondence as of the date of deposit of the correspondence as "Express Mail." A petition to withdraw the holding of abandonment relying upon a timely reply placed in "Express Mail" must include an appropriate petition under 37 C.F.R. §1.10(c), (d), * (e), or (g) (see MPEP § 513). When a paper is shown to have been mailed to the Office using the "Express Mail" procedures, the paper must be entered in PALM with the "Express Mail" date.

Similarly, applicants may establish that a reply was filed with a postcard receipt that properly identifies the reply and provides *prima facie* evidence that the reply was timely filed. See MPEP § 503. For example, if the application has been held abandoned for failure to file a reply to a first Office action, and applicant has a postcard receipt showing that an amendment was timely filed in response to the Office action, then the holding of abandonment should be withdrawn upon the filing of a petition to withdraw the holding of abandonment. When the reply is shown to have been timely filed based on a postcard receipt, the reply must be entered into PALM using the date of receipt of the reply as shown on the post card receipt.

---

[8] Therefore, by example, an unintentional delay in the reply might occur if the reply and transmittal form are to be prepared for shipment by the US Postal Service, but other pressing matters distract one's attention and the mail is not timely deposited for shipment.

[9] See: Delgar v. Schulyer, 172 USPQ 513 (D.D.C. 1971).

> Where a certificate of mailing under 37 C.F.R. §1.8, but not a postcard receipt, is relied upon in a petition to withdraw the holding of abandonment, see 37 C.F.R. §1.8(b) and MPEP § 512. As stated in 37 C.F.R §1.8(b)(3) the statement that attests to the previous timely mailing or transmission of the correspondence must be on a personal knowledge basis, or to the satisfaction of the Director of the USPTO. If the statement attesting to the previous timely mailing is not made by the person who signed the Certificate of Mailing (i.e., there is no personal knowledge basis), then the statement attesting to the previous timely mailing should include evidence that supports the conclusion that the correspondence was actually mailed (e.g., copies of a mailing log establishing that correspondence was mailed for that application). When the correspondence is shown to have been timely filed based on a certificate of mailing, the correspondence is entered into PALM with the actual date of receipt (i.e., the date that the duplicate copy of the papers was filed with the statement under 37 C.F.R. §1.8).
>
> 37 C.F.R. §1.8(b) also permits applicant to notify the Office of a previous mailing or transmission of correspondence and submit a statement under 37 C.F.R. 1.8(b)(3) accompanied by a duplicate copy of the correspondence when a reasonable amount of time (e.g., more than one month) has elapsed from the time of mailing or transmitting of the correspondence. Applicant does not have to wait until the application becomes abandoned before notifying the Office of the previous mailing or transmission of the correspondence. Applicant should check the private Patent Application Information Retrieval (PAIR) system for the status of the correspondence before notifying the Office. See MPEP § 512.
>
> * * *

And the regulation requires that relief be sought within two (2) months of the act complained of.

Petitioner appears to have satisfied the showing requirement described above and satisfied his burden herein.

CONCLUSION

The instant petition under 37 C.F.R. §1.181 hereby is **granted**; and the 19 July, 2006, Notice of Abandonment is **vacated**.

The instant application is released to Publications Branch to be processed into a patent.

While telephone inquiries regarding this decision may be directed to the undersigned at (571)

272-3214, it is noted that all practice before the Office is in writing (see: 37 C.F.R. §1.2[10]) and the proper authority for action on any matter in this regard are the statutes (35 U.S.C.), regulations (37 C.F.R.) and the commentary on policy (MPEP). Therefore, no telephone discussion may be controlling or considered authority for Petitioner's action(s).

John J. Gillon, Jr.
Senior Attorney
Office of Petitions

[10] The regulations at 37 C.F.R. §1.2 provide:
§1.2 Business to be transacted in writing.
All business with the Patent and Trademark Office should be transacted in writing.The personal attendance of applicants or their attorneys or agents at the Patent and Trademark Office is unnecessary. The action of the Patent and Trademark Office will be based exclusively on the written record in the Office. No attention will be paid to any alleged oral promise, stipulation,or understanding in relation to which there is disagreement or doubt.

UNITED STATES PATENT AND TRADEMARK OFFICE

Commissioner for Patents
United States Patent and Trademark Office
P.O. Box 1450
Alexandria, VA 22313-1450
www.uspto.gov

KAPLAN GILMAN GIBSON & DERNIER L.L.P.
900 ROUTE 9 NORTH
WOODBRIDGE, NJ 07095

COPY MAILED

APR 2 0 2007

OFFICE OF PETITIONS

In re Patent of Roman et al.	:	Decision on Petition
Patent No. 7,071,701	:	
Issue Date: July 4, 2006	:	
Application No. 10/794,177	:	
Filing Date: March 5, 2004	:	
Attorney Docket No. 436/16	:	

This is a decision in response to the paper filed December 7, 2006, which is being treated as a request under 37 CFR 3.81 to accept the correction of the assignee data on the front page of the above-identified patent. This is also a decision on the petition under 37 CFR 1.182 to reprint the assignee's name on the front page of the Letters Patent.

The request under 37 CFR 3.81 is **GRANTED**.

The petition under 37 CFR 1.182 is **DISMISSED**.

37 CFR 3.81(b) reads:

> Any request for issuance of an application in the name of the assignee submitted after the date of payment of the issue fee, and any request for a patent to be corrected to state the name of the assignee, must state that the assignment was submitted for recordation as set forth in § 3.11 before issuance of the patent, and must include a request for a certificate of correction under § 1.323 of this chapter (accompanied by the fee set forth in § 1.20(a)) and the processing fee set forth in § 1.17(i) of this chapter.

In other words, the request under 37 CFR 3.81(b) will be granted when:

(1) a request under 37 CFR 3.81 and the fee set forth in 37 CFR 1.17(i) are filed,
(2) the assignment was submitted for recordation prior to issuance of the patent, and
(3) a request for a certificate of correction and the fee set forth in 37 CFR 1.20(a) are submitted.

All the above requirements have been met and the request under 37 CFR 3.81 is granted. The fee of $100 has been charged to petitioner's deposit account for the certificate of correction.

The Certificates of Correction Branch will issue the requested certificate of correction in due course.

The USPTO will reprint the front page of the Letters Patent if the following conditions are met:

(1) Submission of a petition under 37 CFR 1.182
(2) Payment of a $400 petition fee
(3) Payment of a $100 fee to place a certificate of correction in the USPTO archives

As for item (2) above, petitioner's deposit account contains insufficient funds to charge the required $400 fee. Therefore, the front page of the Letters Patent will not be reprinted at this time.

If petitioner wishes for the front page to be reprinted, petitioner must file a request for reconsideration and submit the $400 fee. Any request for reconsideration must be submitted within TWO (2) MONTHS from the mail date of this decision. The reconsideration request should include a cover letter entitled "Renewed Petition under 37 CFR 1.182."

Further correspondence with respect to this matter should be addressed as follows:

By mail: Mail Stop Petition
Commissioner for Patents
P.O. Box 1450
Alexandria, VA 22313-1450

By facsimile: (571) 273-8300
Attn: Office of Petitions

By hand: U.S. Patent and Trademark Office
Customer Service Window
Randolph Building
401 Dulany Street
Alexandria, VA 22314

The Certificates of Correction Branch will be informed of the instant decision and will process the certificate of correction to be placed in the archives of the USPTO.

Telephone inquiries regarding this communication should be directed to Petitions Attorney Steven Brantley at (571) 272-3203.

Charles Steven Brantley
Senior Petitions Attorney
Office of Petitions

UNITED STATES PATENT AND TRADEMARK OFFICE

Commissioner for Patents
United States Patent and Trademark Office
P.O. Box 1450
Alexandria, VA 22313-1450
www.uspto.gov

KAPLAN GILMAN GIBSON & DERNIER L.L.P.
900 ROUTE 9 NORTH
WOODBRIDGE, NJ 07095

COPY MAILED

AUG 09 2007

OFFICE OF PETITIONS

In re Patent of Roman et al. :
Patent No. 7,071,701 :
Issue Date: July 4, 2006 :
Application No. 10/794,177 :
Filing Date: March 5, 2004 :
Attorney Docket No. 436/16 :

Decision on Petition

This is a decision on the petition under 37 CFR 1.182 filed May 3, 2007, to reprint the assignee's name on the front page of the Letters Patent.

The petition under 37 CFR 1.182 to reprint the front page of the Letters Patent is **GRANTED**.

Petitioner is advised that it is the practice of the U.S. Patent and Trademark Office (USPTO) to issue a certificate of correction to correct an error on the part of an application in those cases where the assignee or attorney data is incorrect or was inadvertently not provided at the time of payment of the issue fee or the inventor's name is misspelled or otherwise incorrect. Note 37 CFR 1.323 and MPEP 1482 (35 U.S.C. 255), which states:

> "Whenever a mistake of a clerical or typographical nature, or of minor character, which was not the fault of the Patent and Trademark Office, appears in a patent and a showing has been made that such mistake occurred in good faith, the Commissioner may, upon payment of the required fee, issue a certificate of correction, if the correction does not involve such changes in the patent as would constitute new matter or would require re-examination. Such patent, together with the certificate, shall have the same effect and operation in law on the trial of actions for causes thereafter arising as if the same had been originally issued in such correct form."

In view of the above, and since the desired correction of the assignee's name can be effected by way of a certificate of correction, it is unnecessary to reprint the front page of the Letters Patent.

However the USPTO will reprint the front page of the Letters Patent if the following conditions are met:

1. Submission of a petition under 37 CFR 1.182
2. Payment of a $200 petition fee
3. Payment of a $100 fee to place a certificate of correction in the USPTO archives

Since petitioner has met all three conditions noted above, the front page of the Letters Patent will be reprinted to include the assignee's name.

Petitioner may wish to note that the patent's front page is reprinted for petitioner's records only, and the Office's records of the patent will not be changed, except to add the certificate of correction. On the USPTO Internet web site, e.g., the original patent's front page will remain as originally printed and will not be replaced by the new front page.

The file is being forwarded to the Certificate of Correction Branch for appropriate processing of a certificate of correction to be placed in the archives of the USPTO. Afterwards, the file will be forwarded to the Publishing Division for reprinting of the front page of the original Letters Patent.

Telephone inquiries concerning this decision should be directed to the undersigned at (571) 272-3203. Telephone inquiries regarding the reprinting of the front page of the Letters Patent should be directed to the Office of Patent Publications at (571) 272-4200.

Charles Steven Brantley
Petitions Attorney
Office of Petitions

UNITED STATES PATENT AND TRADEMARK OFFICE

Commissioner for Patents
United States Patent and Trademark Office
P.O. Box 1450
Alexandria, VA 22313-1450
www.uspto.gov

LAW OFFICE OF JOHN L ISAAC
7114 W JEFFERSON AVE
SUITE 100
LAKEWOOD CO 80235-2309

COPY MAILED
AUG 0 7 2006
OFFICE OF PETITIONS

In re Application of	:
Tom B. Kim	:
Application No. 10/794,179	: DECISION DISMISSING
Filed: March 5, 2004	: PETITION
Attorney Docket No. 7016.02.07	:

This is a decision on the petition to revive under 37 CFR 1.137(b), filed April 20, 2006.

The petition is **DISMISSED**.

Any request for reconsideration of this decision must be submitted within TWO (2) MONTHS from the mail date of this decision. Extensions of time under 37 CFR 1.136(a) are permitted. The reconsideration request should include a cover letter entitled "Renewed Petition Under 37 CFR 1.137(b)." No further petition fee is required for a renewed petition. This is **not** a final agency decision within the meaning of 5 USC 704.

The application became abandoned for failure to submit the $385 statutory basic filing fee and the $65 late surcharge, as required by the Notice to File Missing Parts mailed August 10, 2004. This Notice set an extendable period for reply of two (2) months. No fee and surcharge having been received, the application became abandoned on October 11, 2004. A Notice of Abandonment was mailed on May 13, 2005.

A grantable petition under 37 CFR 1.137(b) must be accompanied by: (1) the required reply, unless previously filed; (2) the petition fee as set forth in 37 CFR 1.17(m); (3) a statement that the entire delay in filing the required reply from the due date for the reply until the filing of a grantable petition pursuant to 37 CFR 1.137(b) was unintentional; and (4) any terminal disclaimer (and fee as set forth in 37 CFR 1.20(d)) required by 37 CFR 1.137(d).

The instant petition lacks requirement (1).

With the petition, petitioner paid the petition fee and made the proper statement of unintentional delay. However, petitioner has not submitted the proper amount for the statutory basic filing fee and the surcharge. Petitioner submitted a check in the amount of $450 to cover the $385 filing fee and $65 surcharge in effect when the Notice was mailed on August 10, 2004. Effective December 8, 2004, the statutory basic filing fee (for applications filed before December 8, 2004) was increased to $395. No authorization to charge a fee deficiency to a deposit account could be found in the application file. Accordingly, before the petition can be granted, petitioner will need to submit the balance of $10.

Receipt of the $750 petition fee is acknowledged.

Further correspondence concerning this application should be addressed as follows:

By mail: Mail Stop Petitions
Commissioner for Patents
P.O. Box 1450
Alexandria VA 22313-1450

By FAX: (571)273-8300
Attn: Office of Petitions

Telephone inquiries specific to this decision may be directed to the undersigned at (571)272-3207.

Cliff Congo
Petitions Attorney
Office of Petitions

UNITED STATES PATENT AND TRADEMARK OFFICE

Commissioner for Patents
United States Patent and Trademark Office
P.O. Box 1450
Alexandria, VA 22313-1450
www.uspto.gov

COPY MAILED
NOV 14 2006
OFFICE OF PETITIONS

LAW OFFICE OF JOHN L ISAAC
7114 W JEFFERSON AVE
SUITE 100
LAKEWOOD CO 80235-2309

In re Application of	:
Tom B. Kim	:
Application No. 10/794,179	: DECISION GRANTING
Filed: March 5, 2004	: PETITION
Attorney Docket No. 7016.02.07	:

This is a decision on the renewed petition to revive under 37 CFR 1.137(b), filed August 30, 2006.

The petition is **GRANTED**.

The application became abandoned for failure to submit the $385 statutory basic filing fee and the $65 late surcharge, as required by the Notice to File Missing Parts mailed August 10, 2004. This Notice set an extendable period for reply of two (2) months. No fee and surcharge having been received, the application became abandoned on October 11, 2004. A Notice of Abandonment was mailed on May 13, 2005. Applicant filed a petition to revive on April 20, 2006. However, the petition was dismissed in a decision mailed on August 7, 2006. The petition did not submit the full balance of the filing fee and surcharge due.

With the instant renewed petition, petitioner has submitted the required balance of $10 due for the filing fee and surcharge.

The matter is being forwarded to the Office of Initial Patent Examination for pre-examination processing.

Telephone inquiries specific to this decision may be directed to the undersigned at (571)272-3207.

Cliff Congo
Petitions Attorney
Office of Petitions

UNITED STATES PATENT AND TRADEMARK OFFICE

COMMISSIONER FOR PATENTS
UNITED STATES PATENT AND TRADEMARK OFFICE
P.O. BOX 1450
ALEXANDRIA, VA 22313-1450
www.uspto.go

Paper No.

COPY MAILED

DEC 0 6 2004

OFFICE OF PETITIONS

BRINKS HOFER GILSON & LIONE
P.O. BOX 10395
CHICAGO, IL 60610

In re Application of	:	
Rodgers et al.	:	
Application No. 10/794,185	:	DECISION GRANTING
Filed: March 3, 2004	:	STATUS UNDER
Attorney Docket No.	:	37 CFR 1.47(a)
10599/132	:	

This is in response to a Petition Under 37 CFR 1.47, filed October 12, 2004, to allow the other inventor(s) to proceed with the application on behalf of himself or herself and the nonsigning inventor.

The petition is **granted**.

The above-identified application and papers have been reviewed and found in compliance with 37 CFR 1.47(a). This application is hereby accorded Rule 1.47(a) status.

Petitioner has shown that the non-signing inventor, William E. McKenzie III, refuses to join in the application.

As provided in Rule 1.47(a), this Office will forward notice of this application's filing to the non-signing inventor at the address given in the Petition. Notice of the filing of this application will also be published in the Official Gazette.

The application file is being returned to the Office of Initial Patent Examination for continued processing.

Telephone inquiries concerning this matter should be directed to Petitions Attorney Derek L. Woods at (571) 272-3232.

Derek L. Woods
Attorney/Advisor
Office of Petitions

UNITED STATES PATENT AND TRADEMARK OFFICE

Commissioner for Patents
United States Patent and Trademark Office
P.O. Box 1450
Alexandria, VA 22313-1450
www.uspto.gov

Paper No.

GRAYBEAL, JACKSON, HALEY LLP
155 - 108TH AVENUE NE
SUITE 350
BELLEVUE WA 98004-5901

JAN 5 2006

In re Application of:
Nicholas B. MacKinnon
Serial No.: 10/794,186
Filed: March 4, 2004
Attorney Docket No.: **1802-3-6**

NOTICE OF WITHDRAWAL FROM ISSUE UNDER 37 CFR § 1.313

The purpose of this communication is to inform you that the above-identified application is being withdrawn from issue pursuant to 37 CFR § 1.313.

The above-identified application is hereby withdrawn from issue. The Notice of Allowance and Issue Fee Due and the Notice of Allowability mailed December 19, 2005, are hereby vacated.

The application is being withdrawn to permit reopening of prosecution. The reasons therefor will be communicated to you by the examiner.

Upon receipt of a new Notice of Allowance and Issue Fee Due, applicant may request that any previously submitted issue fee be applied toward payment of the issue fee in the amount identified on the new Notice of Allowance and Issue Fee Due. If the application is abandoned, applicant may request either a refund, or a credit to a Deposit Account.

Telephone inquires should be directed to T. C. Patel at (571) 272-2098.

The above-identified application is being forwarded to the examiner for prompt appropriate action.

Richard K. Seidel, Director
Technology Center 2800
Semiconductors, Electrical and Optical
Systems and Components

UNITED STATES PATENT AND TRADEMARK OFFICE

UNITED STATES DEPARTMENT OF COMMERCE
United States Patent and Trademark Office
Address: COMMISSIONER FOR PATENTS
P.O. Box 1450
Alexandria, Virginia 22313-1450
www.uspto.gov

APPL NO.	FILING OR 371 (c) DATE	ART UNIT	FIL FEE REC'D	ATTY.DOCKET NO	DRAWINGS	TOT CLMS	IND CLMS
10/794,210	02/24/2004	2141	770	42430-10730	3	20	3

CONFIRMATION NO. 8510

CORRECTED FILING RECEIPT

OC000000013188172

Reginald J. Hill
Jenner & Block LLP
One IBM Plaza
Chicago, IL 60611

Date Mailed: 07/08/2004

Receipt is acknowledged of this regular Patent Application. It will be considered in its order and you will be notified as to the results of the examination. Be sure to provide the U.S. APPLICATION NUMBER, FILING DATE, NAME OF APPLICANT, and TITLE OF INVENTION when inquiring about this application. Fees transmitted by check or draft are subject to collection. Please verify the accuracy of the data presented on this receipt. **If an error is noted on this Filing Receipt, please write to the Office of Initial Patent Examination's Filing Receipt Corrections, facsimile number 703-746-9195. Please provide a copy of this Filing Receipt with the changes noted thereon. If you received a "Notice to File Missing Parts" for this application, please submit any corrections to this Filing Receipt with your reply to the Notice. When the USPTO processes the reply to the Notice, the USPTO will generate another Filing Receipt incorporating the requested corrections (if appropriate).**

Applicant(s)

Charles Calvin Byers, Wheaton, IL;

Domestic Priority data as claimed by applicant

Foreign Applications

If Required, Foreign Filing License Granted: 06/02/2004

Projected Publication Date: 08/25/2005

Non-Publication Request: No

Early Publication Request: No

Title

Method and apparatus for sharing internet content

Preliminary Class

709

LICENSE FOR FOREIGN FILING UNDER
Title 35, United States Code, Section 184
Title 37, Code of Federal Regulations, 5.11 & 5.15

GRANTED

The applicant has been granted a license under 35 U.S.C. 184, if the phrase "IF REQUIRED, FOREIGN FILING LICENSE GRANTED" followed by a date appears on this form. Such licenses are issued in all applications where the conditions for issuance of a license have been met, regardless of whether or not a license may be required as set forth in 37 CFR 5.15. The scope and limitations of this license are set forth in 37 CFR 5.15(a) unless an earlier license has been issued under 37 CFR 5.15(b). The license is subject to revocation upon written notification. The date indicated is the effective date of the license, unless an earlier license of similar scope has been granted under 37 CFR 5.13 or 5.14.

This license is to be retained by the licensee and may be used at any time on or after the effective date thereof unless it is revoked. This license is automatically transferred to any related applications(s) filed under 37 CFR 1.53(d). This license is not retroactive.

The grant of a license does not in any way lessen the responsibility of a licensee for the security of the subject matter as imposed by any Government contract or the provisions of existing laws relating to espionage and the national security or the export of technical data. Licensees should apprise themselves of current regulations especially with respect to certain countries, of other agencies, particularly the Office of Defense Trade Controls, Department of State (with respect to Arms, Munitions and Implements of War (22 CFR 121-128)); the Office of Export Administration, Department of Commerce (15 CFR 370.10 (j)); the Office of Foreign Assets Control, Department of Treasury (31 CFR Parts 500+) and the Department of Energy.

NOT GRANTED

No license under 35 U.S.C. 184 has been granted at this time, if the phrase "IF REQUIRED, FOREIGN FILING LICENSE GRANTED" DOES NOT appear on this form. Applicant may still petition for a license under 37 CFR 5.12, if a license is desired before the expiration of 6 months from the filing date of the application. If 6 months has lapsed from the filing date of this application and the licensee has not received any indication of a secrecy order under 35 U.S.C. 181, the licensee may foreign file the application pursuant to 37 CFR 5.15(b).

UNITED STATES PATENT AND TRADEMARK OFFICE

Commissioner for Patents
United States Patent and Trademark Office
P.O. Box 1450
Alexandria, VA 22313-1450
www.uspto.gov

HEWLETT PACKARD COMPANY
P O BOX 272400, 3404 E. HARMONY ROAD
INTELLECTUAL PROPERTY ADMINISTRATION
FORT COLLINS, CO 80527-2400

COPY MAILED

SEP 25 2007

OFFICE OF PETITIONS

In re Application of

Nguyen, et al.

Application No. 10/794,213

Filed: March 5, 2004

Attorney Docket No. 200314491-1

DECISION ON PETITION

This is a decision on the petition under 37 CFR §1.137(b), August 31, 2007, to revive the above-identified application.

The petition is **granted**.

This application became abandoned for failure to timely remit the issue fee of $1400.00 and publication fee of $300.00 as required by the Notice of Allowance and Issue Fee Due (the "Notice") mailed May 16, 2007. The Notice set forth a three (3) month statutory period for reply. No response was received within the allowable period. Accordingly, this application became abandoned on August 17, 2007. A Notice of Abandonment was mailed on September 11, 2007.

The issue fee and publication fee were received on August 31, 2007.

Form PTOL-85B, filed August 31, 2007, is noted and made of record.

The application is being directed to the Office of Patent Publications for further processing.

Telephone inquiries concerning this decision may be directed to the undersigned at (571) 272-3222.

Kenya A. McLaughlin
Petitions Attorney
Office of Petitions

UNITED STATES PATENT AND TRADEMARK OFFICE

Commissioner for Patents
United States Patent and Trademark Office
P.O. Box 1450
Alexandria, VA 22313-1450
www.uspto.gov

SIERRA PATENT GROUP, LTD.
P O BOX 6149
STATELINE NV 89449

COPY MAILED

JAN 0 5 2005

OFFICE OF PETITIONS

In re Application of Cave, et al. Application No. 10/794,216 Filed: March 5, 2004 Attorney Docket No. CAVE-001 For: METHOD, SYSTEM, AND COMPUTER PROGRAM PRODUCT FOR PHYSICIAN EFFICIENCY MEASUREMENT AND PATIENT HEALTH RISK STRATIFICATION	DECISION GRANTING PETITION

This is a decision on the petition, filed November 29, 2004 (certificate of mailing date November 23, 2004), requesting, in effect, withdrawal of the Notice of Omitted Item(s) in a Nonprovisional Application (Notice), mailed October 26, 2004.

The application was filed on March 5, 2004. On October 26, 2004, the Office of Initial Patent Examination mailed a Notice informing petitioners that pages 69-74 of the specification appeared to have been omitted.

In response to the Notice, petitioners timely filed the present petition on November 29, 2004 (certificate of mailing date November 23, 2004). Petitioners request that pages 69-74 be accorded a filing date of March 5, 2004 on the basis that the entire specification, including allegedly missing pages 69-74, was received in the Patent and Trademark Office (PTO) on March 5, 2004.

In support, the petition is accompanied by a copy of applicants' itemized postcard receipt showing an Office of Initial Patent Examination generated barcode citing March 5, 2004 as the date of receipt. The postcard lists that the filing included, *inter alia*, 161 pages of specification. A review of the application file reveals that there are 155 pages present. Pages 69-74 are missing.

The return postcard constitutes *prima facie* evidence that the entire 161 page specification, including missing pages 69-74 , was filed on March 5, 2004. MPEP 503. Accordingly, the request is granted.

Pursuant to petitioners' authorization, the $400.00 petition fee will be credited to petitioners'

deposit account, no. 50-0612.

The application is being returned to Office of Initial Patent Examination for further processing, with a filing date of **March 5, 2004**, using the copy of pages 69-74 supplied with the petition.

Any inquiries pertaining to this matter may be directed to the undersigned at (571) 272-3230.

E. Shirene Willis

E. Shirene Willis
Senior Petitions Attorney
Office of Petitions

UNITED STATES PATENT AND TRADEMARK OFFICE

COMMISSIONER FOR PATENTS
UNITED STATES PATENT AND TRADEMARK OFFICE
P.O. BOX 1450
ALEXANDRIA, VA 22313-1450
www.uspto.gov

LISA M. SOLTIS
ILLINOIS TOOL WORKS INC.
3600 WEST LAKE AVENUE
GLENVIEW, IL 60025

COPY MAILED

MAR 16 2006

OFFICE OF PETITIONS

In re Application of	:	
Smolinski, et al.	:	DECISION ON PETITION
Application No. 10/794,221	:	
Filed: March 5, 2004	:	
Atty. Dkt. No.: 14263	:	

This decision is in response to the petition filed February 24, 2006 under CFR 1.181 to withdraw the holding of abandonment.

The petition under 37 CFR 1.181 is hereby **GRANTED**.

This application was held abandoned October 27, 2005, for failure to timely file a proper response to the final Office action mailed July 26, 2005. The final Office action set a three month shortened statutory period for reply. Notice of Abandonment was mailed February 14, 2006.

Petitioners argue that a response to the final Office action was timely submitted October 21, 2005 in accordance with the Certificate of Transmission procedures outlined at 37 CFR 1.8. Petitioners have included a copy of the response to the Office action bearing a certificate of facsimile.

A review of the application file does not indicate receipt of the response purportedly submitted October 21, 2005, however, the response will be considered timely as it complies with the requirements of 37 CFR 1.8(b) in that (1) the Office was promptly informed of the previous timely mailing, (2) a copy of the previously submitted correspondence with certificate of facsimile thereon has been supplied, and (3) statements attesting to the previous timely mailing have been submitted. Specifically, petitioners acknowledge failure to adhere to the requirement to submit official responses to the USPTO Centralized Facsimile number, however, petitioners argue that in accordance with MPEP 502.01, the response submitted via facsimile to the examiner of record should have been rerouted to the Central Facsimile number.

Petitioners arguments are found to be persuasive, however, petitioners are reminded of the requirement to adhere to the use of the official USPTO Centralized Facsimile number, effective December 1, 2003, in future to avoid inadvertent holdings of abandonment.

In view of the above, the Notice of Abandonment is hereby VACATED and the Notice of Abandonment is WITHDRAWN.

There is no indication in the official application file wrapper that Michael Griggs was ever empowered to prosecute the instant application for patent. If Mr. Griggs desires to receive future correspondence regarding this application, the appropriate documentation must be submitted to the Office. **Petitioners are advised that all future correspondence will be directed to the address currently of record until such time as appropriate instructions are received to the contrary.**

This application is being forwarded to Technology Center 3700 for further processing.

Telephone inquiries regarding this decision should be directed to the undersigned at (571) 272-3205.

Alesia M. Brown
Petitions Attorney
Office of Petitions

CC: MICHAEL GRIGGS
53 W. JACKSON BLVD. SUITE 1353
CHICAGO, IL 60604-3787

UNITED STATES PATENT AND TRADEMARK OFFICE

COMMISSIONER FOR PATENTS
UNITED STATES PATENT AND TRADEMARK OFFICE
P.O. BOX 1450
ALEXANDRIA, VA 22313-1450
www.uspto.gov

WILLIAM B. KEZER
TOWNSEND AND TOWNSEND AND CREW LLP
TWO EMBARCADERO CENTER, 8TH FLOOR
SAN FRANCISCO, CA 94111

COPY MAILED

NOV 09 2006

OFFICE OF PETITIONS

In re Application of	:	
Jonathan Houze, et al.	:	
Application No. 10/794,228	:	DECISION ON REQUEST
Filed: March 4, 2004	:	TO WITHDRAW
Attorney Docket No. 018781-005940US	:	FROM RECORD
	:	

This is a decision on the Request to Withdraw as attorney or agent of record under 37 CFR §1.36(b), filed August 4, 2005.

The request is **NOT APPROVED** as moot.

A review of the file record indicates that the power of attorney to William B. Kezer and all the other attorneys/agents associated with Customer Number 20350 was revoked by the assignee of the patent application on August 14, 2006. Accordingly, the request to withdraw under 37 CFR § 1.36(b) is moot.

All future communications from the Office will continue to be directed to the below-listed address until otherwise notified by applicant.

There is no outstanding Office action that requires a reply from the applicant.

Telephone inquires concerning this decision should be directed to the undersigned at (571) 272-3204.

Sherry D. Brinkley
Petitions Examiner
Office of Petitions

cc: JONES DAY
222 EAST 41ST ST
NEW YORK, NY 10017

UNITED STATES PATENT AND TRADEMARK OFFICE

COMMISSIONER FOR PATENTS
UNITED STATES PATENT AND TRADEMARK OFFICE
P.O. BOX 1450
ALEXANDRIA, VA 22313-1450
www.uspto.gov

JONES DAY
222 EAST 41ST ST
NEW YORK NY 10017

COPY MAILED

MAR 0 2 2009

OFFICE OF PETITIONS

In re Application of :
Houze et al. :
Application No. 10/794,228 : ON APPLICATION FOR
Filed: March 4, 2004 : PATENT TERM ADJUSTMENT
Atty Docket No. 11134-062-999 :

This is in response to the "REQUEST FOR RECONSIDERATION OF PATENT TERM ADJUSTMENT UNDER 37 C.F.R. § 1.705(b)" filed November 19, 2008. Applicant requests that the determination of patent term adjustment be increased from 888 days to 1,412 days assuming that the patent issues on Tuesday, March 17, 2009. Applicant requests this correction on the basis that the Office will take in excess of three years to issue this patent and in light of the recent court decision in Wyeth v. Dudas, No. 07-1492 (D.D.C. September 30, 2008).

As the instant application for patent term adjustment requests reconsideration of the patent term adjustment as it relates to the Office's failure to issue the patent within three years of the filing date, a decision is being **held in abeyance** until after the actual patent date. Knowledge of the actual date the patent issues is required to calculate the amount, if any, of additional patent term patentee is entitled to for Office failure to issue the patent within three years. See 37 CFR 1.703(b).

Applicant is given **TWO (2) MONTHS** from the issue date of the patent to file a written request for reconsideration of the patent term adjustment for Office failure to issue the patent within three years. A copy of this decision should accompany the request. Applicant may seek such consideration without

payment of an additional fee. However, as to all other bases for seeking reconsideration of the patent term adjustment indicated in the patent, all requirements of 37 CFR 1.705(d) must be met. Requests for reconsideration on other bases must be timely filed and must include payment of the required fee.

Rather than file the request for reconsideration of Patent Term Adjustment at the time of the mailing of the notice of allowance, applicant is advised that they may wait until the time of the issuance of the patent and file a request for reconsideration of the patent term pursuant to 37 CFR 1.705(d). The USPTO notes that it does not calculate the amount of time earned pursuant to 37 CFR 1.702(b) until the time of the issuance of the patent and accordingly, the Office will consider any request for reconsideration of the patent term adjustment due to an error in the calculation of 37 CFR 1.702(b) to be timely if the request for reconsideration is filed within two months of the issuance of the patent.

The Office acknowledges submission of the $200.00 fee set forth in 37 CFR 1.18(e). No additional fees are required.

The application is being forwarded to the Office of Data Management for issuance of the patent. The patent term adjustment indicated on the patent (as shown on the Issue Notification mailed about three weeks prior to patent issuance) will include any additional adjustment accrued both for Office delay in issuing the patent more than four months after payment of the issue fee and satisfaction of all outstanding requirements, and for the Office taking in excess of three years to issue the patent (to the extent that the three-year period does not overlap with periods already accorded).

Telephone inquiries specific to this decision should be directed to Senior Petitions Attorney, Christina Tartera Donnell, at (571) 272-3211.

Kery A. Fries

Kery A. Fries
Senior Legal Advisor
Office Patent Legal Administration

UNITED STATES PATENT AND TRADEMARK OFFICE

Commissioner for Patents
United States Patent and Trademark Office
P.O. Box 1450
Alexandria, VA 22313-1450
www.uspto.gov

COPY MAILED

JUL 14 2009

OFFICE OF PETITIONS

JONES DAY
222 EAST 41ST ST
NEW YORK NY 10017

In re Patent No. 7,511,043	:
HOUZE et al.	:
Issue Date: March 31, 2009	: DECISION ON REQUEST FOR
Application No. 10/794,228	: RECONSIDERATION OF
Filed: March 4, 2004	: PATENT TERM ADJUSTMENT
Attorney Docket No. 11134-062-999	:

This is in response to the "SECOND REQUEST FOR RECONSIDERATION OF PATENT TERM ADJUSTMENT UNDER 37 C.F.R. § 1.705(d)" filed May 11, 2009. Patentees request that the determination of patent term adjustment for the above-identified patent be corrected from nine hundred (900) days to one thousand four hundred twenty-seven (1,427) days.

The request for reconsideration of patent term adjustment is **DISMISSED** with respect to making any change in the patent term adjustment determination under 35 U.S.C. 154(b) of 900 days.

On March 31, 2009, the above-identified application matured into U.S. Patent No. 7,511,043 with a revised patent term adjustment of 900 days. The Office determined that the 758 days[1] of Office delay, pursuant to 35 U.S.C. 154(b)(1)(B) and 37 CFR 1.702(b),[2]

---

[1] As of the issuance of the patent on March 31, 2009, the application was pending three years and 758 days.

[2] Pursuant to 35 U.S.C. 154(b)(1)(B), 37 CFR 1.702(b) provides, in pertinent part, that:

Failure to issue a patent within three years of the actual filing date of the application. Subject to the provisions of 35 U.S.C. 154(b) and this subpart, the term of an original patent shall be adjusted if the issuance of the patent was delayed due to the failure of the Office to issue a patent within three years after the date on which the application was filed under

overlap with the 900 days of Office delay,[3] pursuant to 35 U.S.C. 154(b)(1)(A) and 37 CFR 1.702(a)(1), (2), and (4),[4] accorded during the pendency of the application. As such, the Office allowed entry of only the period of adjustment of 900 days. No additional days of patent term adjustment were entered at issuance under the three-year pendency provision. Given the 0 days of applicant delay, the patent issued with a revised patent term adjustment of 900 days.

On May 11, 2009, patentees timely submitted this request for reconsideration of patent term adjustment within two months of the issue date of the patent. See 37 CFR 1.705(d). Patentees aver that the correct number of days of Patent Term Adjustment is 1,427 days under the court's interpretation of the overlap

---

35 U.S.C. 111(a) or the national stage commenced under 35 U.S.C. 371(b) or (f) in an international application[.]

[3] A Restriction Requirement was mailed on October 2, 2007, 14 months and 881 days after the application was filed on March 4, 2004. Further, the Office did not respond to the reply of October 31, 2007, until March 4, 2008, 4 months and 4 days after the date on which the reply was filed. The Office also failed to respond to the reply of June 3, 2008, until October 6, 2008, 4 months and 3 days after the date on which the reply was filed. Lastly, the Office issued the patent on March 31, 2009, 4 months and 12 days after the payment of the issue fee on November 19, 2008.

[4] 37 CFR 1.702, provides grounds for adjustment of patent term due to examination delay under the Patent Term Guarantee Act of 1999 (original applications, other than designs, filed on or after May 29, 2000).

> (a) Failure to take certain actions within specified time frames. Subject to the provisions of 35 U.S.C. 154(b) and this subpart, the term of an original patent shall be adjusted if the issuance of the patent was delayed due to the failure of the Office to:
>
> (1) Mail at least one of a notification under 35 U.S.C. 132 or a notice of allowance under 35 U.S.C. 151 not later than fourteen months after the date on which the application was filed under 35 U.S.C. 111(a) or fulfilled the requirements of 35 U.S.C. 371 in an international application;
>
> (2) Respond to a reply under 35 U.S.C. 132 or to an appeal taken under 35 U.S.C. 134 not later than four months after the date on which the reply was filed or the appeal was taken;
>
> . . .
>
> (4) Issue a patent not later than four months after the date on which the issue fee was paid under 35 U.S.C. 151 and all outstanding requirements were satisfied.

provision as set forth in Wyeth v. Dudas, 580 F. Supp. 2d 138, 88 U.S.P.Q. 2d 1538 (D.D.C. 2008). Patentees state:

> Applicants respectfully submit that under controlling case law, calculating the patent term adjustment is the result of summing the number of days of delay under 37 C.F.R. § 1.702(a) that do not comprise actual calendar days occurring in the B period (that is, the A period minus calendar days overlapping in both the A and B periods) and the number of days of delay under 37 C.F.R. § 1.702(b) (the B period). *See Wyeth et al. v. Dudas,* No. 07-1492, Doc No. 27 (D.D.C. September 30, 2008) (hereinafter *Wyeth),* a copy of which is included here as Exhibit C.
>
> In *Wyeth,* the Court held that 'the only way that periods of time can 'overlap' is if they occur on the same day [and thus, if] an 'A delay' occurs on one calendar day and a 'B delay' occurs on another, they do not overlap.'

Request dated 05/11/09, p. 4.

Further, patentees aver that "231 actual calendar days of the A period, discussed in detail below, were actual calendar days included in the 758 days of the B period." Id. This overlapping period is the 231 days running from May 5, 2005 to March 4, 2007. Patentees assert the patent term adjustment is calculated as the sum of 669 days (the non-overlapping period of Office delay) plus 758 days (Three Years Delay) minus 0 days (applicant delay) for a total PTA of 1,427 days.

Patentees' interpretation of the period of overlap has been considered, but found inconsistent with the Office's interpretation of the overlap provision, 35 U.S.C. 154(b)(2)(A). 35 U.S.C. 154(b)(2)(A) limits the adjustment of patent term, as follows:

> to the extent that the periods of delay attributable to grounds specified in paragraph (1) overlap, the period of any adjustment granted under this subsection shall not exceed the actual number of days the issuance of the patent was delayed.

As explained in *Explanation of 37 CFR 1.703(f)*[5] *and of the United States Patent and Trademark Office Interpretation of 35 U.S.C. 154(b)(2)(A)*, 69 Fed. Reg. 34283 (June 21, 2004), the Office interprets 35 U.S.C. 154(b)(2)(A) as permitting either patent term adjustment under 35 U.S.C. 154(b)(1)(A)(i)-(iv), or patent term adjustment under 35 U.S.C. 154(b)(1)(B), but not as permitting patent term adjustment under both 35 U.S.C. 154(b)(1)(A)(i)-(iv) and 154(b)(1)(B). Accordingly, the Office implements the overlap provision as follows:

> If an application is entitled to an adjustment under 35 U.S.C. 154(b)(1)(B), the entire period during which the application was pending (except for periods excluded under 35 U.S.C. 154(b)(1)(B)(i)-(iii)), and not just the period beginning three years after the actual filing date of the application, is the period of delay under 35 U.S.C. 154(b)(1)(B) in determining whether periods of delay overlap under 35 U.S.C. 154(b)(2)(A). Thus, any days of delay for Office issuance of the patent more than 3 years after the filing date of the application, which overlap with the days of patent term adjustment accorded prior to the issuance of the patent will not result in any additional patent term adjustment. See 35 U.S.C. 154(b)(1)(B), 35 U.S.C. 154(b)(2)(A), and 37 CFR § 1.703(f). See *Changes to Implement Patent Term Adjustment Under Twenty Year Term; Final Rule*, 65 Fed. Reg. 54366 (Sept. 18, 2000). See also *Revision of Patent Term Extension and Patent Term Adjustment Provisions; Final Rule*, 69 Fed. Reg. 21704 (April 22, 2004), 1282 Off. Gaz. Pat. Office 100 (May 18, 2004). See also *Explanation of 37 CFR 1.703(f) and of the United States Patent and Trademark Office Interpretation of 35 U.S.C. 154(b)(2)(A)*, 69 Fed. Reg. 34283 (June 21, 2004).

Further, as stated in the *Explanation of 37 CFR 1.703(f) and of the United States Patent and Trademark Office Interpretation of 35 U.S.C. 154(b)(2)(A)*, the Office has consistently taken the

---

[5] Likewise, 37 CFR 1.703(f) provides that:

> To the extent that periods of delay attributable to the grounds specified in §1.702 overlap, the period of adjustment granted under this section shall not exceed the actual number of days the issuance of the patent was delayed.

position that if an application is entitled to an adjustment under the three-year pendency provision of 35 U.S.C. 154(b)(1)(B), the entire period during which the application was pending before the Office (except for periods excluded under 35 U.S.C. 154(b)(1)(B)(i)-(iii)), and not just the period beginning three years after the actual filing date of the application, is the relevant period under 35 U.S.C. 154(b)(1)(B) in determining whether periods of delay "overlap" under 35 U.S.C. 154(b)(2)(A).

This interpretation is consistent with the statute. Taken together the statute and rule provide that to the extent that periods of delay attributable to grounds specified in 35 U.S.C. 154(b)(1) and in corresponding § 1.702 overlap, the period of adjustment granted shall not exceed the actual number of days the issuance of the patent was delayed.

In this instance, the relevant period under 35 U.S.C. 154(b)(1)(B) in determining whether periods of delay "overlap" under 35 U.S.C. 154(b)(2)(A) is the period during which the application was pending before the Office beginning on the date of filing of the application under 35 U.S.C. 111(a) on March 4, 2004, and ending on the date of issuance of the patent on March 31, 2009 (not including any other periods excluded under 35 U.S.C. 154(b)(1)(B)(i)-(iii)).

Pursuant to 35 U.S.C. 154(b)(1)(A) and 37 CFR 1.702(a)(1), (2) and (4), 900 days of patent term adjustment were accorded during the pendency of the application for Office delay prior to the issuance of the patent. Pursuant to 35 U.S.C. 154(b)(1)(B) and 37 CFR 1.702(b), 758 days of patent term adjustment accrued for Office issuance of the patent more than three years after the filing date of the application.

All of the 758 days of patent term adjustment under 37 CFR 1.702(b) overlap with the 900 days of patent term adjustment under 37 CFR 1.702(a)(1), (2), and (4). Entry of both the 758 days and the 900 days is neither permitted nor warranted. 900 days is the actual number of days issuance of the patent was delayed.

Accordingly, at issuance, the Office properly entered no additional days of patent term adjustment, having considered the 758 days of Office delay under the three-year pendency provision.

In view thereof, the Office affirms that the revised determination of patent term adjustment at the time of the issuance of the patent is 900 days.

The Office acknowledges the previous submission of the $200.00 fee set forth in 37 CFR 1.18(e) on November 19, 2008. No additional fees are required.

Telephone inquiries specific to this matter should be directed to the undersigned at (571) 272-3211.

Christina Tartera Donnell

Christina Tartera Donnell
Senior Petitions Attorney
Office of Petitions

UNITED STATES PATENT AND TRADEMARK OFFICE

Commissioner for Patents
United States Patent and Trademark Office
P.O. Box 1450
Alexandria, VA 22313-1450
www.uspto.gov

ALAN CARLSON
6202 LYNN LANE
LAGO VISTA TX 78645

MAILED

JUN 22 2009

OFFICE OF PETITIONS

In re Application of	:	
Alan CARLSON	:	
Application No. 10/794,234	:	DECISION ON PETITION
Filed: March 05, 2004	:	
Attorney Docket No. **AIC 004**	:	

This is a decision on the petition under the unintentional provisions of 37 CFR 1.137(b), filed May 26, 2009, to revive the above-identified application.

The petition is **GRANTED**.

The application became abandoned for failure to timely reply within the meaning of 37 CFR 1.113 to the final Office action, mailed July 22, 2008, which set a shortened statutory period for reply of three (3) months. No extensions of time under the provisions of 37 CFR 1.136(a) were obtained. The proposed reply required for consideration of a petition to revive must be a Notice of Appeal (and appeal fee required by 37 CFR 41.20(b)(2), an amendment that *prima facie* places the application in condition for allowance, a Request for Continued Examination and submission (37 CFR 1.114), or the filing of a continuing application under 37 CFR 1.53(b). See MPEP 711.03(c)(II)(A)(2). Since the amendment submitted does not *prima facie* place the application in condition for allowance, the reply required must be a Notice of Appeal (and appeal fee), RCE, or the filing of a continuing application under 37 CFR 1.53(b). Accordingly, the application became abandoned on October 23, 2008.

The petition satisfies the requirements of 37 CFR 1.137(b) in that petitioner has supplied (1) the reply in the form of a Request for Continued Examination (RCE) and fee of $405.00, and the submission required by 37 CFR 1.114; (2) the petition fee of $810.00; and (3) a proper statement of unintentional delay. Accordingly, the reply to the final Office action of July 22, 2008 is accepted as having been unintentionally delayed.

Telephone inquiries concerning this decision should be directed to the undersigned at (571) 272-4231.

This application is being referred to Technology Center AU 3764 for processing of the RCE and for appropriate action by the Examiner in the normal course of business on the amendment submitted in accordance with 37 CFR 1.114.

Michelle R. Eason

Michelle R. Eason
Paralegal Specialist
Office of Petition

UNITED STATES PATENT AND TRADEMARK OFFICE

Commissioner for Patents
United States Patent and Trademark Office
P.O. Box 1450
Alexandria, VA 22313-1450
www.uspto.gov

August 2005

MARIO RABINOWITZ
715 LAKEMEAD WAY
REDWOOD CITY, CA 94062-3922

SEP 01 2005

In re Application of:
MARIO RABINOWITZ
Serial No.: 10/794,236
Filed: 06 March 2004

Title: MICRO-OPTICS SOLAR ENERGY CONCENTRATOR

DECISION ON PETITION TO MAKE SPECIAL UNDER 37 C.F.R. § 1.102(c) [ENERGY]

This is a decision on the petition filed on July 18, 2005, to make the above-identified application special under the accelerated examination procedure set forth in MPEP § 708.02(VI) in accordance with 37 C.F.R. § 1.102(c).

The petition to make the application special is **GRANTED**.

In support of the petition, the petition provides a statement explaining how the invention materially contributes to conservation of energy.

For accelerated examination under MPEP § 708.02(VI) in accordance with 37 C.F.R. § 1.102(c), a petition must include a statement explaining how the invention materially contributes to the conservation, discovery, or development of energy resources.

The requirements of MPEP § 708.02(VI) are considered to have been met. The application will be advanced out of turn for examination, and will continue to be treated as special throughout the entire prosecution in the Office according to the procedure set forth in MPEP § 708.02.

The application file is being forwarded to the examiner for expedited prosecution.

If the examiner finds any interfering application for the same subject matter, he/she should consider such application simultaneously with this application and should state in the official letter of such application that he/she is taking it out of its turn because of possible interference.

Should an appeal be taken in this application or should this application becomes involved in an interference, consideration of the appeal and the interference will be expedited by all Patent and

Trademark Office officials concerned, contingent likewise upon diligent prosecution by the applicant.

After allowance, this application will be given priority for printing. See M.P.E.P. § 1309.

Any inquiry regarding this decision should be directed to Hien H. Phan, Special Program Examiner, at (571) 272-1606.

Hien H. Phan, Special Program Examiner
Technology Center 2800 - Semiconductors,
Electrical & Optical Systems & Components

UNITED STATES PATENT AND TRADEMARK OFFICE

Commissioner for Patents
United States Patent and Trademark Office
P.O. Box 1450
Alexandria, VA 22313-1450
www.uspto.gov

COPY MAILED

MAR 1 2 2008

OFFICE OF PETITIONS

MAO-KUEI CHANG
P. O. BOX 55-846
TAIPEI 104 TW
TAIWAN

In re Patent No. 6,974,692	:	
Issue Date: 13 December, 2005	:	
Application No. 10/794,238	:	DECISION
Filed: 5 March, 2004	:	
Attorney Docket No. (None)		

This is a decision on the petition filed on 26 June, 2006, requesting issuance of duplicate Letters Patent for the above-identified patent/application under 37 C.F.R. §1.182.

The Office regrets the delay in addressing the instant matter, however, while a decision previously was prepared, signed and sent for mailing, it now appears that mailing did not occur.

The petition is **DISMISSED.**

NOTES: Any petition (and fee) for reconsideration of this decision must be submitted within two (2) months from the mail date of this decision. Extensions of time under 37 C.F.R. §1.136(a) are permitted. The reconsideration request should include a cover letter entitled "Renewed Petition under 37 C.F.R. §1.182."

BACKGROUND

Petitioner has made demand upon the Office to issue duplicate Letters Patent in the instant matter.

While as of the time of the petition filing, Petitioner indicated that the documents were not received (alternatively, that once received they were misplaced, lost, destroyed or the like),

because the papers considered as a petition bear no correspondence/contact information, it is unclear from the petition that Petitioner's address was at the time of issue the proper address consistent with Office records.

Petitioner should, through a minimum of a declaration over signature (and registration number if Petitioner is a registered practitioner), represent to the Office that Petitioner is/remains the party in interest and the factual basis and reasoning for the relief requested. The petition fee under 37 C.F.R. §1.17(h) may be required, but will be refunded if not due in light of facts demonstrated. (See: the link to then-current fees at http://www.uspto.gov/main/howtofees.htm .)

CONCLUSION

Because it appears that Petitioner has not satisfied the evidentiary burdens, the petition as considered under 37 C.F.R. §1.182 hereby is **dismissed**.

Further correspondence with respect to this matter should be addressed as follows:

By mail: Commissioner for Patents
P.O. Box 1450
Alexandria, VA 22313-1450

By FAX: IFW Formal Filings
(571) 273-8300
ATTN.: Office of Petitions

By hand: Mail Stop: Petition
Customer Service Window
Randolph Building
401 Dulany Street
Alexandria, VA 22314

While telephone inquiries regarding this decision may be directed to the undersigned at (571) 272-3214, it is noted that all practice before the Office is in writing (see: 37 C.F.R. §1.2[4]) and the proper authority for action on any matter in this regard are the statutes (35 U.S.C.), regulations

[4] The regulations at 37 C.F.R. §1.2 provide:

§1.2 Business to be transacted in writing.
All business with the Patent and Trademark Office should be transacted in writing. The personal attendance of applicants or their attorneys or agents at the Patent and Trademark Office is unnecessary. The action of the Patent and Trademark Office will be based exclusively on the written record in the Office. No attention will be paid to any alleged oral promise, stipulation, or understanding in relation to which there is disagreement or doubt.

(37 C.F.R.) and the commentary on policy (MPEP). Therefore, no telephone discussion may be controlling or considered authority for Petitioner's action(s).

John J. Gillon, Jr.
Senior Attorney
Office of Petitions

UNITED STATES PATENT AND TRADEMARK OFFICE

Commissioner for Patents
United States Patent and Trademark Office
P.O. Box 1450
Alexandria, VA 22313-1450
www.uspto.gov

JOSEPH S. HEINO, ESQ.
DAVIS & KUELTHAU, S.C.
111 E. KILBOURN
SUITE 1400
MILWAUKEE, WI 53202-6613

COPY MAILED

APR 0 8 2005

OFFICE OF PETITIONS

In re Application of	:	
Hatcher, Forest	:	
Application No. 10/794,239	:	ON PETITION
Filed: March 6, 2004	:	
Attorney Docket No. 32110.15255	:	

This is a decision on the petition under 37 C.F.R. § 1.137(b), filed Mach 18, 2005, to revive the above-identified application.

The petition is **GRANTED.**

The above-identified application became abandoned for failure to reply in a timely manner to the Notice to File Corrected Application Papers (Notice) mailed May 24, 2004. The Notice set a period for reply of two (2) months from the mail date of the Notice. No extensions of time under the provisions of 37 CFR 1.136(a) were obtained. Accordingly, the above-identified application became abandoned on July 25, 2004. A Notice of Abandonment was mailed on February 14, 2005.

Petitioner has met the requirements to revive the above-identified application pursuant to 37 CFR 1.137(b).

This matter is being referred to the Office of Initial Patent Examination for further processing.

Telephone inquiries regarding this decision should be directed to the undersigned at (571) 272-3282.

Liana Chase
Petitions Examiner
Office of Petitions
Office of the Deputy Commissioner
for Patent Examination Policy

UNITED STATES PATENT AND TRADEMARK OFFICE

COMMISSIONER FOR PATENTS
UNITED STATES PATENT AND TRADEMARK OFFICE
P.O. BOX 1450
ALEXANDRIA, VA 22313-1450
www.uspto.gov

Chun-Pok Leung
TOWNSEND and TOWNSEND and CREW LLP
Two Embarcadero Center, 8th Floor
San Francisco, California 94111-3834

MAIL

SEP 2 8 2005

DIRECTOR OFFICE
TECHNOLOGY CENTER 2100

In re Application of:
Nobuyuki SAIKA et al
Application No. 10/794,241
Filed: March 5, 2004
For: BACKUP SYSTEM AND METHOD BASED ON DATA CHARACTERISTICS

DECISION ON PETITION TO MAKE SPECIAL

This is a decision on the petition, filed on July 26, 2005 under 37 C.F.R. §102(d) and M.P.E.P. § 708.02(VIII): Accelerated Examination, to make the above-identified application special.

The petition is **GRANTED**.

M.P.E.P. § 708.02, Section VIII which sets out the prerequisites for a grantable petition for Accelerated Examination under 37 C.F.R. § 102(d) states in relevant part:

> A new application (one which has not received any examination by the examiner) may be granted special status provided that applicant (and this term includes applicant's attorney or agent) complies with each of the following items:
>
> (A) Submits a petition to make special accompanied by the fee set forth in 37 CFR 1.17(h);
>
> (B) Presents all claims directed to a single invention, or if the Office determines that all the claims presented are not obviously directed to a single invention, will make an election without traverse as a prerequisite to the grant of special status;
>
> (C) Submits a statement(s) that a pre-examination search was made, listing the field of search by class and subclass, publication, Chemical Abstracts, foreign patents, etc. A search made by a foreign patent office satisfies this requirement;
>
> (D) Submits one copy each of the references deemed most closely related to the subject matter encompassed by the claims if said references are not already of record; and
>
> (E) Submits a detailed discussion of the references, which discussion points out, with the particularity required by 37 CFR 1.111 (b) and (c), how the claimed subject matter is patentable over the references.
>
> In those instances where the request for this special status does not meet all the prerequisites set forth above, applicant will be notified and the defects in the request will be stated. The application will remain in the status of a new application awaiting action in its regular turn. In

> those instances where a request is defective in one or more respects, applicant will be given one opportunity to perfect the request in a renewed petition to make special. If perfected, the request will then be granted. If not perfected in the first renewed petition, any additional renewed petitions to make special may or may not be considered at the discretion of the Group Special Program Examiner.

Applicant's submission of July 26, 2005 meets all the criteria set out above. Accordingly, the petition is **GRANTED**. The application file is being forwarded to the Examiner for accelerated examination in accordance with M.P.E.P. § 708.02. If the application is subsequently allowed, it will be given priority for printing. See M.P.E.P. § 1309.

Vincent N. Trans
Special Program Examiner
Technology Center 2100
Computer Architecture, Software, and
Information Security
571-272-3613

UNITED STATES PATENT AND TRADEMARK OFFICE

Commissioner for Patents
United States Patent and Trademark Office
P.O. Box 1450
Alexandria, VA 22313-1450
www.uspto.gov

MAIL

AUG 1 8 2005

DIRECTOR OFFICE
TECHNOLOGY CENTER 2600

TOWNSEND AND TOWNSEND AND CREW, LLP
TWO EMBARCADERO CENTER
EIGHTH FLOOR
SAN FRANCISCO CA 94111-3834

In re Application of :
SAIKA, NOBUYUKI :
Application No. 10/794,307 : DECISION ON PETITION
Filed: March 5, 2004 : TO MAKE SPECIAL
For: **EXCLUSIVE CONTROL SYSTEM AND METHOD FOR USING SHARED RESOURCE** :

This is a decision on the petition filed July 26, 2005 under Manual of Patent Examination Procedure §708.02,VIII requesting accelerated examination.

The petition under Manual of Patent Examination Procedure §708.02, VIII, must:
(1) be filed prior to receiving any examination by the examiner,
(2) be accompanied by the required fee- $130,
(3) the claims should be directed to a single invention (if it is determined that the claims pertain to more than one invention, then applicant will have to make an election without traverse or forfeit accelerated examination status),
(4) state that a pre-examination search was made, and fully discuss the search method employed, such as classes and subclasses searched, publications, Chemical abstracts, patents, etc. A search made by a foreign patent office satisfies this requirement,
(5) be accompanied by a copy of each of the references most closely related to the subject matter encompassed by the claims if said references are not already of record,
(6) fully discuss the references, pointing out with the particularity required by 37 C.F.R. §1.111 (b) and (c), how the claimed subject matter is patentable over the references.

The petitioner meets all the above-listed requirements. Accordingly, the petition is **GRANTED**.

The application will retain its special status throughout its entire prosecution, including any appeal to the Board of Patent Appeals and Interferences, subject only to diligent prosecution by the applicant. The application file is being forwarded to the examiner for appropriate action in due course.

Kenneth A. Wieder
Special Program Examiner
Technology Center 2600
Communications

UNITED STATES PATENT AND TRADEMARK OFFICE

Commissioner for Patents
United States Patent and Trademark Office
P.O. Box 1450
Alexandria, VA 22313-1450
www.uspto.gov

SEP 28 2004

In re Application of
Herbert Hartgrove et al.
Serial Number: 10/794,315
Filed: March 5, 2004
For: STRUCTURALLY STABLE FLAME RETARDANT BEDDING ARTICLES

PETITION UNDER MPEP 708.02 VIII

This is in response to the Petition to Make Special filed March 5, 2004, requesting that the above-identified application be granted Special Status under section 708.02 VIII of the MPEP and 37 CFR 1.102(d). The fee set forth in 37 CFR 1.17(h) has been paid.

The criteria set forth in section 708.02 VIII of the MPEP and 37 CRF 1.102(d) have been met.

Accordingly the petition is **GRANTED.**

Marian C. Knode

Marian C. Knode, Special Programs Examiner
Technology Center 1700
Chemical and Materials Engineering

WOOD, PHILLIPS, KATZ, CLARK & MORTIMER
500 W. MADISON STREET
SUITE 3800
CHICAGO IL 60661

UNITED STATES PATENT AND TRADEMARK OFFICE

Commissioner for Patents
United States Patent and Trademark Office
P.O. Box 1450
Alexandria, VA 22313-1450
www.uspto.gov

Patent No. : 7,078,381 B2
Serial No. : 10/794,316
Inventor(s) : Bachovchin et al.
Issued : July 16, 2006
Title : **METHOD OF REGULATING GLUCOSE METABOLISM, AND REAGENTS RELATED THERETO**
Docket No. : **TUV-043.04**

Re: Request for Reconsideration

Consideration has been given your request for the issuance of a certificate of correction for the above-identified patent under the provisions of 37 CFR 1.322 and/or 1.323.

Assignees' names and addresses (assignment data) printed in a patent are based *solely* on information supplied in the appropriate space for identifying the assignment data, i.e., item 3 of the Fee(s) Transmittal Form PTOL-85B. After payment of the issue fee, correction of assignment data submitted on the PTOL-85B can only be done by Certificate of Correction under 37 CFR 1.323, with a request under 37 CFR 3.81(b).

A request for a patent to be corrected to state the name of the assignee must:

A. state that the assignment was submitted for recordation as set forth in 37 CFR 3.11 before issuance of the patent;
B. include a request for a certificate of correction under 37 CFR 1.323 along with the fee set forth in 37 CFR 1.20(a); and
C. include the processing fee set forth in 37 CFR 1.17(i).

If the request is granted, Certificates of Correction Branch will be notified that a Certificate of Correction may be issued.
See Manual of Patent Examining Procedure, Section 1481.01 (Rev. 3) (Oct. 2005).

Applicant has not included items A and or C above, accordingly, the request for Certificate of Correction to add or change the assignee data is dismissed.

Any request under 37 CFR 3.81(b) should be directed to the following address or facsimile number:

By mail:	Mail Stop PETITIONS Commissioner for Patents Post Office Box 1450 Alexandria, VA 22313-1450
By hand:	Customer Service Window Mail Stop Petitions Randolph Building 401 Dulany Street Alexandria, VA 22314
By fax:	571-273-8300 ATTN: Office of Petitions

If a fee (currently $100) was previously submitted for consideration of a Request for Certificate of Correction, under CFR 1.323, to correct assignment data, no additional fee is required.

Ernest C. White, *LIE*
For Mary F. Diggs (703) 756-1580
Decisions & Certificates
of Correction Branch
(703) **756-1590**

FOLEY HOAG, LLP
PATENT GROUP, WORLD TRADE CENTER WEST
155 SEAPORT BLVD
BOSTON MA 02110

ecw

UNITED STATES PATENT AND TRADEMARK OFFICE

Commissioner for Patents
United States Patent and Trademark Office
P.O. Box 1450
Alexandria, VA 22313-1450
www.uspto.gov

FOLEY HOAG, LLP
PATENT GROUP, WORLD TRADE CENTER WEST
155 SEAPORT BLVD
BOSTON MA 02110

MAILED

MAY 24 2010

OFFICE OF PETITIONS
ON PETITION

In re Patent No. 7,078,381 :
Issue Date: July 18, 2006 :
Application No. 10/794,316 :
Filed: March 4, 2004 :
Attorney Docket No. TUV-043.04 :

This is a decision on the petition filed February 2, 2010, which is being treated as a request under 37 CFR 3.81(b)[1] to correct the name of the assignees on the front page of the above-identified patent by way of a Certificate of Correction.

The request is **GRANTED**.

Telephone inquiries concerning this decision may be directed to the undersigned at (571) 272-3215. Inquiries regarding the issuance of a certificate of correction should be directed to the Certificate of Correction Branch at (571) 272-4200.

The Certificates of Correction Branch will be notified of this decision granting the petition under 37 CFR 3.81(b) and directing issuance of the requested Certificate of Correction.

Charlema Grant
Petitions Attorney
Office of Petitions

[1] *See* MPEP 1309, subsection II; and Official Gazette of June 22, 2004.

UNITED STATES PATENT AND TRADEMARK OFFICE

Commissioner for Patents
United States Patent and Trademark Office
P.O. Box 1450
Alexandria, VA 22313-1450
www.uspto.gov

ALIGN TECHNOLOGY C/O WAGNER BLECHER LLP
123 WESTRIDGE DRIVE
WATSONVILLE CA 95076

COPY MAILED
AUG 22 2008

In re Application of	:	
Peter G. Knopp	:	
Application No.: 10/794324	:	ON PETITION
Filing or 371(c) Date: 03/04/2004	:	
Attorney Dckt Number: AT-000222 US	:	

This is a decision on the petition under the unintentional provisions of 37 CFR 1.137(b), filed June 9, 2008, to revive the above-identified application.

This Petition is hereby **dismissed**.

Any further petition to revive the above-identified application must be submitted within TWO (2) MONTHS from the mail date of this decision. Extensions of time under 37 CFR 1.136(a) are permitted. The reconsideration request should include a cover letter entitled "Request for Reconsideration of Petition under [insert the applicable code section]". This is **not** final agency action within the meaning of 5 U.S.C. § 704.

Background

This application became abandoned for failure to timely pay the issue and publication fees on or before January 22, 2008, as required by the Notice of Allowance and Fee(s) Due, mailed October 22, 2007. Accordingly, the date of abandonment of this application is January 23, 2008.

A Grantable Petition Under 37 CFR 1.137(b)

A grantable petition pursuant to this paragraph must be accompanied by:
(1) The reply required to the outstanding Office action or notice, unless previously filed;
(2) The petition fee as set forth in § 1.17(m);
(3) A statement that the entire delay in filing the required reply from the due date for the reply until the filing of a grantable petition pursuant to this paragraph was unintentional. The Director may require additional information where there is a question whether the delay was unintentional; and
(4) Any terminal disclaimer (and fee as set forth in § 1.20(d)) required pursuant to paragraph (d) of this section.

The petition lacks item(s) (1).

The issue fee

As to item (1), in an application or patent, abandoned or lapsed for failure to pay the issue fee or any portion thereof, the required reply must be the payment of the issue fee or any outstanding balance thereof. *See* MPEP 711.03(c)(III)(A)(1). Therefore, the filing of a Request for Continued Examination is not a proper reply under 37 CFR 1.137(a)(1) or (b)(1).

In view of the authorization contained in the petition to charge any additional fees due, the Office attempted to charge the $1440.00 issue fee to petitioner's deposit account. However, there were insufficient funds in the account. Accordingly, the petition is dismissed.

Further correspondence with respect to this matter should be addressed as follows:

By mail: Director for Patents
PO Box 1450
Alexandria, VA 22313-1450

By FAX: (571) 273-8300
Attn: Office of Petitions

By hand: Customer Service Window
Randolph Building
401 Dulany Street
Alexandria, VA 22314

Telephone inquiries concerning this decision should be directed to the undersigned at (571) 272-3232. All other inquiries should be directed to the applicable Office.

/Derek L. Woods/
Derek L. Woods
Attorney
Office of Petitions

UNITED STATES PATENT AND TRADEMARK OFFICE

Commissioner for Patents
United States Patent and Trademark Office
P.O. Box 1450
Alexandria, VA 22313-1450
www.uspto.gov

TOWNSEND AND TOWNSEND AND CREW, LLP (018563)
TWO EMBARCADERO CENTER, EIGHTH FLOOR
SAN FRANCISCO CA 94111-3834

COPY MAILED

NOV 2 0 2008

OFFICE OF PETITIONS

In re Application of	:	
Peter G. Knopp	:	
Application No.: 10/794324	:	ON PETITION
Filing or 371(c) Date: 03/04/2004	:	
Attorney Dckt Number: AT-000222 US	:	

This is a decision on the renewed petition under the unintentional provisions of 37 CFR 1.137(b), filed October 7, 2008, to revive the above-identified application.

The petition is **GRANTED**.

This application became abandoned for failure to timely pay the issue and publication fees on or before January 22, 2008, as required by the Notice of Allowance and Fee(s) Due, mailed October 22, 2007. Accordingly, the date of abandonment of this application is January 23, 2008.

Petitioner filed a petition to revive the application under 37 CFR 1.137(b) a Request for Continued Examination on June 9, 2008, however, in an application or patent, abandoned or lapsed for failure to pay the issue fee or any portion thereof, the required reply must be the payment of the issue fee or any outstanding balance thereof. *See* MPEP 711.03(c)(III)(A)(1).

The petition was dismissed in a Decision mailed August 22, 2008. The Decision required the issue fee.

The renewed petition satisfies the requirements of 37 CFR 1.137(b) in that petitioner has supplied (1) the reply in the form of the issue and publication fees; (2) the petition fee; and (3) a proper statement of unintentional delay.

This application is being referred to the Office of Data Management for processing into a patent.

/Derek L. Woods/
Derek L. Woods
Attorney
Office of Petitions

UNITED STATES PATENT AND TRADEMARK OFFICE

Commissioner for Patents
United States Patent and Trademark Office
P.O. Box 1450
Alexandria, VA 22313-1450
www.uspto.gov

TOWNSEND AND TOWNSEND AND CREW, LLP (018563)
TWO EMBARCADERO CENTER, EIGHTH FLOOR
SAN FRANCISCO, CA 94111-3834

COPY MAILED
JAN 12 2009

In re Application of	:	
KNOPP, Peter G.	:	
Application No. 10/794,324	:	DECISION GRANTING PETITION
Filed: March 4, 2004	:	UNDER 37 CFR 1.313(c)(2)
Attorney Docket No. **018563-013810US**	:	

This is a decision on the petition under 37 CFR 1.313(c)(2), filed December 22, 2008, to withdraw the above-identified application from issue after payment of the issue fee.

The petition is **GRANTED**.

The above-identified application is withdrawn from issue for consideration of a submission under 37 CFR 1.114 (request for continued examination). *See* 37 CFR 1.313(c)(2).

Petitioner is advised that the issue fee paid on October 7, 2008 cannot be refunded. If, however, this application is again allowed, petitioner may request that it be applied towards the issue fee required by the new Notice of Allowance.[1]

Telephone inquiries should be directed to the undersigned at (571) 272-7253.

This application is being referred to Technology Center AU 3732 for processing of the request for continued examination under 37 CFR 1.114 and for consideration of the concurrently filed information disclosure statement.

/Monica A. Graves/
Petitions Examiner
Office of Petitions

---

[1] *The request to apply the issue fee to the new Notice may be satisfied by completing and returning the new Part B – Fee(s) Transmittal Form (along with any balance due at the time of submission). Petitioner is advised that the Issue Fee Transmittal Form must be completed and timely submitted to avoid abandonment of the application.*

UNITED STATES PATENT AND TRADEMARK OFFICE

Commissioner for Patents
United States Patent and Trademark Office
P.O. Box 1450
Alexandria, VA 22313-1450
www.uspto.gov

TOWNSEND AND TOWNSEND AND CREW, LLP (018563)
TWO EMBARCADERO CENTER, EIGHTH FLOOR
SAN FRANCISCO, CA 94111-3834

COPY MAILED
JAN 13 2009

In re Application of	:	
KNOPP, Peter G.	:	
Application No. 10/794,324	:	DECISION GRANTING PETITION
Filed: March 4, 2004	:	UNDER 37 CFR 1.313(c)(2)
Attorney Docket No. **018563-013810US**	:	

This is a decision on the petition under 37 CFR 1.313(c)(2), filed December 22, 2008, to withdraw the above-identified application from issue after payment of the issue fee.

The petition is **GRANTED**.

The above-identified application is withdrawn from issue for consideration of a submission under 37 CFR 1.114 (request for continued examination). *See* 37 CFR 1.313(c)(2).

Petitioner is advised that the issue fee paid on October 7, 2008 cannot be refunded. If, however, this application is again allowed, petitioner may request that it be applied towards the issue fee required by the new Notice of Allowance.[1]

Telephone inquiries should be directed to the undersigned at (571) 272-7253.

This application is being referred to Technology Center AU 3732 for processing of the request for continued examination under 37 CFR 1.114 and for consideration of the concurrently filed information disclosure statement.

/Monica A. Graves/
Petitions Examiner
Office of Petitions

---

[1] *The request to apply the issue fee to the new Notice may be satisfied by completing and returning the new Part B – Fee(s) Transmittal Form (along with any balance due at the time of submission). Petitioner is advised that the Issue Fee Transmittal Form* ***must*** *be completed and timely submitted to avoid abandonment of the application.*

UNITED STATES PATENT AND TRADEMARK OFFICE

UNITED STATES DEPARTMENT OF COMMERCE
United States Patent and Trademark Office
Address: COMMISSIONER FOR PATENTS
P.O. Box 1450
Alexandria, Virginia 22313-1450
www.uspto.gov

TOWNSEND AND TOWNSEND AND CREW, LLP (018563)
TWO EMBARCADERO CENTER, EIGHTH FLOOR
SAN FRANCISCO, CA 94111-3834

Mail Date: 04/21/2010

Applicant	: Peter G. Knopp	: DECISION ON REQUEST FOR
Patent Number	: 7658610	: RECALCULATION of PATENT
Issue Date	: 02/09/2010	: TERM ADJUSTMENT IN VIEW
Appliction No	: 10/794,324	: OF WYETH AND NOTICE OF INTENT TO
Filed	: 03/04/2004	: ISSUE CERTIFICATE OF CORRECTION
		:

The Request for Recalculation is **GRANTED** to the extent indicated.

The patent term adjustment has been determined to be **1076** days. The USPTO will *sua sponte* issue a certificate of correction reflecting the amount of PTA days determined by the recalculation.

Prior to the issuance of the certificate of correction, the USPTO will afford patentee an opportunity to be heard and request reconsideration. Accordingly, patentee has **one month or thirty (30) days**, whichever is longer, to file a request for reconsideration of this patent term adjustment calculation. See 35 U.S.C. 154(b)(3)(B)(ii) and 37 CFR 1.322(a)(4). No extensions of time will be granted under 37 CFR 1.136.

Patentee should use document code PET.OP if electronically filing a request for reconsideration of this patent term adjustment calculation. The patentee must also include the information required by 37 CFR 1.705(b)(2) and the fee required by 37 CFR 1.18(e). If patentee does not file a timely request for reconsideration of this patent term adjustment calculation including the information required by 37 CFR 1.705(b)(2) and the fee required by 37 CFR 1.18(e), the USPTO will issue a certificate of correction reflecting the PTA determination noted above.

Patentee should be aware that in order to preserve the right to review in the United States District Court for the District of Columbia of the USPTO patent term adjustment determination, patentee must ensure that he or she also take the steps required under 35 U.S.C. 154(b)(4)(A) in a timely manner. Nothing in the request for recalculation should be construed as providing an alternative time frame for commencing a civil action under 35 U.S.C. 154(b)(4)(A).

Any questions concerning this decision should be directed to the Office of Patent Legal Administration at 571-272-7702.

UNITED STATES PATENT AND TRADEMARK OFFICE

UNITED STATES DEPARTMENT OF COMMERCE
United States Patent and Trademark Office
Address: COMMISSIONER FOR PATENTS
P.O. Box 1450
Alexandria, Virginia 22313-1450
www.uspto.gov

TOWNSEND AND TOWNSEND AND CREW, LLP (018563)
TWO EMBARCADERO CENTER, EIGHTH FLOOR
SAN FRANCISCO, CA 94111-3834

Mail Date: 04/21/2010

Applicant	: Peter G. Knopp	: DECISION ON REQUEST FOR
Patent Number	: 7600999	: RECALCULATION of PATENT
Issue Date	: 10/13/2009	: TERM ADJUSTMENT IN VIEW
Appliction No	: 10/794,325	: OF WYETH AND NOTICE OF INTENT TO
Filed	: 03/04/2004	: ISSUE CERTIFICATE OF CORRECTION
		:

The Request for Recalculation is **GRANTED** to the extent indicated.

The patent term adjustment has been determined to be **600** days. The USPTO will *sua sponte* issue a certificate of correction reflecting the amount of PTA days determined by the recalculation.

Prior to the issuance of the certificate of correction, the USPTO will afford patentee an opportunity to be heard and request reconsideration. Accordingly, patentee has **one month or thirty (30) days**, whichever is longer, to file a request for reconsideration of this patent term adjustment calculation. See 35 U.S.C. 154(b)(3)(B)(ii) and 37 CFR 1.322(a)(4). No extensions of time will be granted under 37 CFR 1.136.

Patentee should use document code PET.OP if electronically filing a request for reconsideration of this patent term adjustment calculation. The patentee must also include the information required by 37 CFR 1.705(b)(2) and the fee required by 37 CFR 1.18(e). If patentee does not file a timely request for reconsideration of this patent term adjustment calculation including the information required by 37 CFR 1.705(b)(2) and the fee required by 37 CFR 1.18(e), the USPTO will issue a certificate of correction reflecting the PTA determination noted above.

Patentee should be aware that in order to preserve the right to review in the United States District Court for the District of Columbia of the USPTO patent term adjustment determination, patentee must ensure that he or she also take the steps required under 35 U.S.C. 154(b)(4)(A) in a timely manner. Nothing in the request for recalculation should be construed as providing an alternative time frame for commencing a civil action under 35 U.S.C. 154(b)(4)(A).

Any questions concerning this decision should be directed to the Office of Patent Legal Administration at 571-272-7702.

UNITED STATES PATENT AND TRADEMARK OFFICE

COMMISSIONER FOR PATENTS
UNITED STATES PATENT AND TRADEMARK OFFICE
P.O. BOX 1450
ALEXANDRIA, VA 22313-1450
www.uspto.go

MAIL

JAN 27 2005

DIRECTOR OFFICE
TECHNOLOGY CENTER 2600

FENWICK & WEST LLP
SILICON VALLEY CENTER
801 CALIFORNIA STREET
MOUNTAIN VIEW, CA 94041

In re application of:
Alexander Saldanha, et al.
Application No. 10/794,335
Filed: March 5, 2004
For: CREATION OF STRUCTURED DATA FROM PLAIN TEXT

DECISION ON REQUEST TO WITHDRAW FROM RECORD

This is a decision on the request for withdrawal as attorney/agent and change of correspondence address filed on October 14, 2004

A grantable request to withdraw as attorney/agent of record must:
(1) indicate the present mailing address of the attorney(s)/agent(s) who seek(s) to withdraw, and
(2) be signed by each attorney/agent seeking to withdraw or clearly be signed on their behalf, and
(3) be *approved* at least thirty (30) days prior to the maximum extendable period for response to any outstanding Office Action, and
(4) indicate the address to which future correspondence should be mailed.

Petitioner has satisfied the requirements for successfully requesting withdrawal. Accordingly, the request is **GRANTED.**

All of the attorneys/agents of record have been withdrawn.

All future communications from the Office will be directed to the address listed below until otherwise notified by applicant. Applicant is reminded of the obligation to promptly notify the Patent and Trademark Office of any change in correspondence address to ensure receipt of all communications from the Office.

Kenneth A. Wieder
Special Program Examiner
Technology Center 2600
Communications
(571) 272-2986

cc: Blakely Sokoloff Taylor & Zafman, LLP
1279 Oakmead Parkway
Sunnyvale, CA 94085-4040

UNITED STATES PATENT AND TRADEMARK OFFICE

COMMISSIONER FOR PATENTS
UNITED STATES PATENT AND TRADEMARK OFFICE
P.O. BOX 1450
ALEXANDRIA, VA 22313-1450
www.uspto.gov

COPY MAILED

SEP 29 2009

OFFICE OF PETITIONS

FISH & RICHARDSON P.C.
P.O. Box 1022
MINNEAPOLIS MN 55440-1022

In re Patent No. 7,259,147	: ON PETITIONS under
Issued: August 21, 2007	: 37 CFR 1.183 and ON REQUEST
Application No. 10/794,344	: FOR RECONSIDERATION OF
Filed: March 5, 2004	: PATENT TERM ADJUSTMENT
Dkt. No.: 14539-004013	:

This is a decision on the 1) Petition under 37 C.F.R. 1.183, requesting that the Office suspend the rules and consider on the merits an Application for Reconsideration of Patent Term Adjustment under 37 C.F.R. 1.705(d) filed more than two months from the date the above-referenced patent issued; and on the 2) Application for Patent Term Adjustment under 37 CFR 1.705(d), both filed on January 22, 2009.

The petition under 37 CFR 1.183 is **dismissed**.

The request for reconsideration of patent term adjustment under 37 CFR 1.705(d) is **dismissed as untimely filed**.

Any request for reconsideration, whether directed to the decision on petition under 37 CFR 1.183 or to the decision on application for patent term adjustment under 37 CFR 1.705(d), must be filed within two months of the mailing date of this decision. Extensions of time under 37 CFR 1.136 are not permitted. See § 1.181(f).

BACKGROUND

On August 21, 2007, the above-identified application matured into U.S. Patent No. 7,259,147, with a revised patent term adjustment of 449 days. No request for reconsideration of the patent term adjustment indicated in the patent was filed within two months of the date the patent issued. Patentee now petitions under 37 C.F.R. § 1.183 to (i) suspend or waive the requirement of 37 C.F.R. § 1.705(d) that a Request for Reconsideration of Patent Term Adjustment be filed within two months of the date the patent issued; and (ii) consider the enclosed Request for Reconsideration of Patent Term Adjustment. Patentee references the recent decision in Wyeth v. Dudas, No. 07-1492 (D.D.C. Sept. 30, 2008) as the basis for the petition.

ON PETITION UNDER 37 CFR 1.183
TO WAIVE THE TWO-MONTH REQUIREMENT OF 37 CFR 1.705(d)

The above-referenced patent issued on August 21, 2007. A request for reconsideration of the patent term adjustment indicated in the patent was not filed until January 22, 2009. Petitioner requests that the Office suspend the rules and consider on the merits the Request for Reconsideration of Patent Term Adjustment under 37 C.F.R. 1.705(d) even though it was untimely filed more than two months from the date the patent issued.

The relevant regulation, 37 CFR 1.705(d), provides that:

> If there is a revision to the patent term adjustment indicated in the notice of allowance, the patent will indicate the revised patent term adjustment. If the patent indicates or should have indicated a revised patent term adjustment, *any request for reconsideration of the patent term adjustment indicated in the patent must be filed within two months of the date the patent issued* and must comply with the requirements of paragraphs (b)(1) and (b)(2) of this section. Any request for reconsideration under this section that raises issues that were raised, or could have been raised, in an application for patent term adjustment under paragraph (b) of this section shall be dismissed as untimely as to those issues. (*emphasis* added).

By the express provisions of 37 CFR 1.705(d), a request for reconsideration of patent term adjustment must be filed within two months of the date the patent issued. It is undisputed that no such request for reconsideration was filed by October 21, 2007, the date two months from the date this patent issued, August 21, 2007. Rather, on January 22, 2009, after the issuance of a decision in Wyeth v. Dudas on September 30, 2008, petitioner filed the instant request for waiver of the two-month requirement.

37 CFR 1.183 provides that:

> In an extraordinary situation, when justice requires, any requirement of the regulations in this part which is not a requirement of the statutes may be suspended or waived by the Director or the Director's designee, *sua sponte*, or on petition of the interested party, subject to such other requirements as may be imposed. Any petition under this section must be accompanied by the petition fee set forth in § 1.17(f).

35 U.S.C. 154, which requires the Office to provide the applicant one opportunity to request reconsideration of any patent term adjustment determination made by the Director, authorizes the Director to establish the procedures for requesting such reconsideration. Those procedures[1]

---

[1] 35 U.S.C. § 154(b)(3) provides that the USPTO shall: (1) prescribe regulations establishing procedures for the application for and determination of patent term adjustments under 35 U.S.C. § 154(b); (2) make a determination of any patent term adjustment under 35 U.S.C. § 154(b) and transmit a notice of that determination with the notice of allowance under 35

include, pursuant to 37 CFR 1.705(d), setting a two-month period for filing a request for reconsideration of the revised patent term adjustment indicated in the patent.

Having considered petitioner's arguments, it is concluded that waiver of the two-month requirement is not warranted. The primary basis for requesting waiver set forth by petitioner is that the "Court's holding of the Office's interpretation of the statute and regulations governing patent term adjustment is in error occurred more than two months after the present patent issued. As a result, petitioner could not have reasonably presented a request for reconsideration of the patent term adjustment within the time period specified under 37 C.F.R. § 1.705(d)." Petitioner further argues that "it would be manifestly unjust to punish those who made an earnest attempt to comply with the laws and regulations as interpreted by the Office. Furthermore, the time period specified under 37 C.F.R. § 1.705(d) is not a requirement of the statutes and is therefore eligible for suspension under 37 C.F.R. § 1.183."

Petitioner has not established that he was precluded from filing a Request for Reconsideration of Patent Term Adjustment within two months of the date the above-referenced patent issued. Instead, petitioner's argument is that the basis for the Request for Reconsideration of Patent Term Adjustment is the Wyeth decision, which was entered after the issuance of their patent.

The fact that any relief ultimately granted in Wyeth would benefit patentee had they timely filed a request for reconsideration does not make the situation extraordinary. Wyeth followed the procedure set forth in 37 CFR 1.705 for requesting reconsideration of the patent term adjustment determination. Then, pursuant to 35 U.S.C. 154(b)(4)(A), Wyeth timely filed a complaint in District Court seeking judicial review of the Office's decision. A Memorandum Opinion and Order, the Wyeth decision of September 30, 2008, directed to the parties involved was issued.

Petitioner chose not to challenge their revised patent term adjustment within the two-month period. Petitioner's argument that they could not have filed a Request for Reconsideration of Patent Term Adjustment within two months of the date the above-referenced patent issued because the basis for the Request for Reconsideration of Patent Term Adjustment is the Wyeth

---

U.S.C. § 151; and (3) provide the applicant one opportunity to request reconsideration of any patent term adjustment determination. Pursuant to the mandate and authority in 35 U.S.C. § 154(b)(3), the USPTO promulgated 37 C.F.R. § 1.705, which provides that: (1) the notice of allowance will include notification of any patent term adjustment under 35 U.S.C. § 154(b)(37 C.F.R. § 1.705(a)); (2) any request for reconsideration of the patent term adjustment indicated in the notice of allowance (except as provided in 37 C.F.R. § 1.705(d)) must be by way of an application for patent term adjustment filed no later than the payment of the issue fee and accompanied by (inter alia) the fee set forth in 37 C.F.R. § 1.18(e)(37 C.F.R. § 1.705(b)); and (3) if the patent indicates or should have indicated a revised patent term adjustment, any request for reconsideration of the patent term adjustment indicated in the patent must be filed within two months of the date the patent issued.

decision, which was entered more than two months after the issuance of their patent, is not persuasive.

Petitioner could have filed a Request for Reconsideration of Patent Term Adjustment as Wyeth did. It is acknowledged that petitioner may have chosen not to file a request for reconsideration based on a conclusion that the Office's interpretation of 35 U.S.C. § 154(b)(2)(A) was correct. Nonetheless, the fact that the District Court has now issued an Opinion contrary to the Office's interpretation does not make the situation extraordinary. This is not unlike any other situation where a patentee (or applicant) challenges a final agency decision and the decision upon judicial review could have had applicability to another patentee (or applicant) had they taken such action. In fact, many patentees may be in the same situation as petitioner with respect to the Wyeth decision. In addition, given that the law only allows 180 days for both the filing of a petition and for the Office's consideration of that petition, petitioner's unexplained delay in filing the petition weighs against them.

Petitioner simply fails to articulate how their failure to file a request for reconsideration of patent term adjustment within two months of the issue date of the patent was due to an extraordinary situation. Petitioner cannot rely on Wyeth's actions or the Wyeth decision to establish that their situation was extraordinary.

The contention that a decision is in error is a basis for a timely request for review of the decision but does not justify a delay in seeking review of such decision.

The Office provided notice that petitions under 37 CFR 1.182 and 1.183 or requests for certificate of corrections under 35 USC 354 and Sec. 1.323 or 35 U.S.C. 255 and Sec. 1.324 are not substitute *fora* to obtain reconsideration of a patent term adjustment determination indicated in a notice of allowance if applicant fails to submit a request for reconsideration within the time period specified in Sec. 1.705(b) or to obtain reconsideration of a patent term adjustment determination indicated in a patent if a patentee fails to submit a request for reconsideration within the time period specified in Sec. 1.705. See 69 Fed. Reg. 21704, 21707 (April, 22, 2004).

In view thereof, the petition under 37 CFR 1.183 for waiver of the two-month requirement of 37 CFR 1.705(d) is **dismissed**.

Accordingly, consideration now turns to the Request for Reconsideration of Patent Term Adjustment under 37 CFR 1.705(d).

ON REQUEST FOR RECONSIDERATION OF PATENT TERM ADJUSTMENT UNDER 37 CFR 1.705(d)

This is a decision on the "APLICATION FOR PATENT TERM ADJUSTMENT UNDER 37 CFR 1.705(d)," filed January 22, 2009. Therein, patentee requests correction of the patent term adjustment (PTA) indicated in the patent to 618 days.

On August 21, 2007, the above-identified application matured into U.S. Patent No. 7,259,147 with a revised patent term adjustment of 449 days. The instant request for reconsideration was filed more than two months after the issuance of the patent, on January 22, 2009.

No error in the printing of the patent has been shown. The patent term adjustment indicated on the patent reflects the Office's determination of patent term adjustment shown in the PAIR system for this application. 37 CFR 1.705(d) provides the sole avenue before the Office for requesting reconsideration of the Office's determination of patent term adjustment indicated in the patent. Moreover, § 1.705(d) states that "any request for reconsideration of the patent term adjustment indicated in the patent must be filed within two months of the date the patent issued and must comply with the requirements of paragraphs (b)(1) and (b)(2) of this section." Since the request was not filed within two months of the issue date of the patent, the request is properly **dismissed as untimely filed**.

CONCLUSION

It is determined that waiver of the requirement pursuant to 37 CFR 1.183 is not warranted. Accordingly, the request for reconsideration of the patent term adjustment under 37 CFR 1.705(d) filed more than two months after the issue date of the patent is dismissed as untimely filed.

Receipt of the fees required for the petition under 37 CFR 1.183 and the application for patent term adjustment is acknowledged.

Telephone inquiries specific to this matter should be directed to the undersigned at (571) 272-3205.

Alesia M. Brown
Petitions Attorney
Office of Petitions

UNITED STATES PATENT AND TRADEMARK OFFICE

UNITED STATES DEPARTMENT OF COMMERCE
United States Patent and Trademark Office
Address: COMMISSIONER FOR PATENTS
P.O. Box 1450
Alexandria, Virginia 22313-1450
www.uspto.gov

WILMERHALE/BOSTON
60 STATE STREET
BOSTON, MA 02109

Mail Date: 07/13/2010

Applicant	: Michael Miller	: DECISION ON REQUEST FOR
Patent Number	: 7643683	: RECALCULATION of PATENT
Issue Date	: 01/05/2010	: TERM ADJUSTMENT IN VIEW
Application No	: 10/794,352	: OF WYETH AND NOTICE OF INTENT TO
Filed	: 03/05/2004	: ISSUE CERTIFICATE OF CORRECTION
		:

The Request for Recalculation is **GRANTED** to the extent indicated.

The patent term adjustment has been determined to be **803** days. The USPTO will *sua sponte* issue a certificate of correction reflecting the amount of PTA days determined by the recalculation.

Prior to the issuance of the certificate of correction, the USPTO will afford patentee an opportunity to be heard and request reconsideration. Accordingly, patentee has **one month or thirty (30) days**, whichever is longer, to file a request for reconsideration of this patent term adjustment calculation. See 35 U.S.C. 154(b)(3)(B)(ii) and 37 CFR 1.322(a)(4). No extensions of time will be granted under 37 CFR 1.136.

Patentee should use document code PET.OP if electronically filing a request for reconsideration of this patent term adjustment calculation. The patentee must also include the information required by 37 CFR 1.705(b)(2) and the fee required by 37 CFR 1.18(e). If patentee does not file a timely request for reconsideration of this patent term adjustment calculation including the information required by 37 CFR 1.705(b)(2) and the fee required by 37 CFR 1.18(e), the USPTO will issue a certificate of correction reflecting the PTA determination noted above.

Patentee should be aware that in order to preserve the right to review in the United States District Court for the District of Columbia of the USPTO patent term adjustment determination, patentee must ensure that he or she also take the steps required under 35 U.S.C. 154(b)(4)(A) in a timely manner. Nothing in the request for recalculation should be construed as providing an alternative time frame for commencing a civil action under 35 U.S.C. 154(b)(4)(A).

Any questions concerning this decision should be directed to the Office of Patent Legal Administration at 571-272-7702.

UNITED STATES PATENT AND TRADEMARK OFFICE

UNITED STATES DEPARTMENT OF COMMERCE
United States Patent and Trademark Office
Address: COMMISSIONER FOR PATENTS
P.O. Box 1450
Alexandria, Virginia 22313-1450
www.uspto.gov

WILMERHALE/BOSTON
60 STATE STREET
BOSTON, MA 02109

Mail Date: 07/13/2010

Applicant	: Michael Miller	: DECISION ON REQUEST FOR
Patent Number	: 7643685	: RECALCULATION of PATENT
Issue Date	: 01/05/2010	: TERM ADJUSTMENT IN VIEW
Application No	: 10/794,353	: OF WYETH AND NOTICE OF INTENT TO
Filed	: 03/05/2004	: ISSUE CERTIFICATE OF CORRECTION
		:

The Request for Recalculation is **GRANTED** to the extent indicated.

The patent term adjustment has been determined to be **946** days. The USPTO will *sua sponte* issue a certificate of correction reflecting the amount of PTA days determined by the recalculation.

Prior to the issuance of the certificate of correction, the USPTO will afford patentee an opportunity to be heard and request reconsideration. Accordingly, patentee has **one month or thirty (30) days**, whichever is longer, to file a request for reconsideration of this patent term adjustment calculation. See 35 U.S.C. 154(b)(3)(B)(ii) and 37 CFR 1.322(a)(4). No extensions of time will be granted under 37 CFR 1.136.

Patentee should use document code PET.OP if electronically filing a request for reconsideration of this patent term adjustment calculation. The patentee must also include the information required by 37 CFR 1.705(b)(2) and the fee required by 37 CFR 1.18(e). If patentee does not file a timely request for reconsideration of this patent term adjustment calculation including the information required by 37 CFR 1.705(b)(2) and the fee required by 37 CFR 1.18(e), the USPTO will issue a certificate of correction reflecting the PTA determination noted above.

Patentee should be aware that in order to preserve the right to review in the United States District Court for the District of Columbia of the USPTO patent term adjustment determination, patentee must ensure that he or she also take the steps required under 35 U.S.C. 154(b)(4)(A) in a timely manner. Nothing in the request for recalculation should be construed as providing an alternative time frame for commencing a civil action under 35 U.S.C. 154(b)(4)(A).

Any questions concerning this decision should be directed to the Office of Patent Legal Administration at 571-272-7702.

UNITED STATES PATENT AND TRADEMARK OFFICE

UNITED STATES DEPARTMENT OF COMMERCE
United States Patent and Trademark Office
Address: COMMISSIONER FOR PATENTS
P.O. Box 1450
Alexandria, Virginia 22313-1450
www.uspto.gov

WOOD, HERRON & EVANS, LLP
2700 CAREW TOWER
441 VINE STREET
CINCINNATI, OH 45202

Mail Date: 04/21/2010

Applicant	: William E. Bausmith III	: DECISION ON REQUEST FOR
Patent Number	: 7581559	: RECALCULATION of PATENT
Issue Date	: 09/01/2009	: TERM ADJUSTMENT IN VIEW
Appliction No	: 10/794,358	: OF WYETH AND NOTICE OF INTENT TO
Filed	: 03/05/2004	: ISSUE CERTIFICATE OF CORRECTION
		:

The Request for Recalculation is **GRANTED** to the extent indicated.

The patent term adjustment has been determined to be **395** days. The USPTO will *sua sponte* issue a certificate of correction reflecting the amount of PTA days determined by the recalculation.

Prior to the issuance of the certificate of correction, the USPTO will afford patentee an opportunity to be heard and request reconsideration. Accordingly, patentee has **one month or thirty (30) days**, whichever is longer, to file a request for reconsideration of this patent term adjustment calculation. See 35 U.S.C. 154(b)(3)(B)(ii) and 37 CFR 1.322(a)(4). No extensions of time will be granted under 37 CFR 1.136.

Patentee should use document code PET.OP if electronically filing a request for reconsideration of this patent term adjustment calculation. The patentee must also include the information required by 37 CFR 1.705(b)(2) and the fee required by 37 CFR 1.18(e). If patentee does not file a timely request for reconsideration of this patent term adjustment calculation including the information required by 37 CFR 1.705(b)(2) and the fee required by 37 CFR 1.18(e), the USPTO will issue a certificate of correction reflecting the PTA determination noted above.

Patentee should be aware that in order to preserve the right to review in the United States District Court for the District of Columbia of the USPTO patent term adjustment determination, patentee must ensure that he or she also take the steps required under 35 U.S.C. 154(b)(4)(A) in a timely manner. Nothing in the request for recalculation should be construed as providing an alternative time frame for commencing a civil action under 35 U.S.C. 154(b)(4)(A).

Any questions concerning this decision should be directed to the Office of Patent Legal Administration at 571-272-7702.

UNITED STATES PATENT AND TRADEMARK OFFICE

UNITED STATES DEPARTMENT OF COMMERCE
United States Patent and Trademark Office
Address: COMMISSIONER FOR PATENTS
P.O. Box 1450
Alexandria, Virginia 22313-1450
www.uspto.gov

WOOD, HERRON & EVANS, LLP
2700 CAREW TOWER
441 VINE STREET
CINCINNATI, OH 45202

Mail Date: 05/18/2010

Applicant : William E. Bausmith III
Patent Number : 7581559
Issue Date : 09/01/2009
Application No : 10/794,358
Filed : 03/05/2004

: NOTICE CONCERNING IMPROPER
: CALCULATION OF PATENT TERM
: ADJUSTMENT BASED UPON USPTO
: IMPROPERLY MEASURING REDUCTION
: PERIOD UNDER 37 CFR 1.704(c)(10).

The United States Patent and Trademark Office (USPTO) discovered that in processing the recent recalculation decisions mailed in response to patentee's filed Request for Recalculation of Patent Term Adjustment in view of Wyeth, the USPTO improperly measured the reduction period for reductions under 37 CFR 1.704(c)(10). Pursuant to 37 CFR 1.704(c)(10), patentee's reduction begins on the date of filing the amendment under 37 CFR 1.312 ("1.312 amendment") or other related paper and ends on the date that the Office mails a response to the filing of the 1.312 amendment or other paper. It has been discovered that during the recalculation, the calculation failed to the limit the reduction to the mail date of the response to the 1.312 amendment or other paper. Accordingly, patentee's reductions were greater than warranted.

This notice **VACATES** the previous GRANTED request for recalculation and provides patentee with a revised GRANTED recalculation.

The patent term adjustment has been determined to be **449** days. The USPTO will *sua sponte* issue a certificate of correction reflecting the amount of patent term adjustment (PTA) days determined by the recalculation.

Prior to the issuance of the certificate of correction, the USPTO will afford patentee an opportunity to be heard and request reconsideration. Accordingly, patentee has **one month or thirty (30) days** from the mail date of this notice, whichever is longer, to file a request for reconsideration of this PTA calculation. See 35 U.S.C. § 154(b)(3)(B)(ii) and 37 CFR 1.322(a)(4).

Patentee should use document code PET.OP if electronically filing a request for reconsideration of this PTA calculation. The patentee must also include the information required by 37 CFR 1.705(b)(2), and the fee required by 37 CFR 1.18(e). If patentee does not file a timely request for reconsideration of this PTA calculation, including the information required by 37 CFR 1.705(b)(2) and the fee required by 37 CFR 1.18(e), the USPTO will issue a certificate of correction reflecting the PTA determination noted above.

Patentee should be aware that in order to preserve the right of review of the USPTO's PTA determination in the United States District Court for the District of Columbia, patentee must ensure that the steps required under 35 U.S.C. § 154 (b)(4) are taken in a timely manner. Nothing in the request for recalculation should be construed as providing an alternative time frame for commencing a civil action under 35 U.S.C. § 154(b)(4).

UNITED STATES PATENT AND TRADEMARK OFFICE

UNITED STATES DEPARTMENT OF COMMERCE
United States Patent and Trademark Office
Address: COMMISSIONER FOR PATENTS
P.O. Box 1450
Alexandria, Virginia 22313-1450
www.uspto.gov

APPLICATION NO.	FILING DATE	FIRST NAMED INVENTOR	ATTORNEY DOCKET NO.	CONFIRMATION NO.
10/794,361	03/05/2004	Derek K. Ward	2063.0070000	8385

23720 7590 04/13/2010
WILLIAMS, MORGAN & AMERSON
10333 RICHMOND, SUITE 1100
HOUSTON, TX 77042

EXAMINER
SWARTHOUT, BRENT

ART UNIT	PAPER NUMBER
2612	

MAIL DATE	DELIVERY MODE
04/13/2010	PAPER

Please find below and/or attached an Office communication concerning this application or proceeding.

The time period for reply, if any, is set in the attached communication.

UNITED STATES PATENT AND TRADEMARK OFFICE

Commissioner for Patents
United States Patent and Trademark Office
P.O. Box 1450
Alexandria, VA 22313-1450
www.uspto.gov

WILLIAMS, MORGAN & AMERSON
10333 Richmond Dr., Suite 1100
Houston, Texas 77042

MAIL

APR 12 2010

DIRECTOR'S OFFICE
TECHNOLOGY CENTER 2600

In re Application of
Derek K. Ward *et al.*
Serial No.: 10/794,361
Filed: March 5, 2004
For: **RAPID MOBILITY ANALYSIS AND VEHICULAR ROUTE PLANNING FROM OVERHEAD IMAGERY**

DECISION ON PETITION
ACCEPTANCE OF COLOR DRAWINGS

This is a decision on the petition under 37 CFR §1.184(4) (2) filed March 5, 2004, requesting acceptance of color drawings.

The petition requests that the color drawings identified in Figures 6 - 16; 19 - 23 be accepted in lieu of black and white drawings.

A grantable petition under 37 C.F.R. §1.84(a) (2) must be accompanied by a fee set forth under 37 C.F.R. § 1.17(h), 3 (three) sets of the color drawings in question, and the specification must contain, or be amended to contain, the following language as the first paragraph in that portion of the specification relating to the brief description of the drawings:

"The file of this patent contains at least one drawing executed in color. Copies of this patent with color drawing(s) will be provided by the Patent and Trademark Office upon request and payment of the necessary fee."

The petition is **GRANTED**.

Michael Horabik
Quality Assurance Specialist
Technology Center 2600
Communications

UNITED STATES PATENT AND TRADEMARK OFFICE

UNITED STATES DEPARTMENT OF COMMERCE
United States Patent and Trademark Office
Address: COMMISSIONER FOR PATENTS
P.O. Box 1450
Alexandria, Virginia 22313-1450
www.uspto.gov

APPLICATION NO.	FILING OR 371(c) DATE	FIRST NAMED INVENTOR	ATTORNEY DOCKET NO.	CONFIRMATION NO.
10/794,390	03/02/2004	Ross A. Hewitt	004906-018210US	5518

20350 7590 10/05/2005
TOWNSEND AND TOWNSEND AND CREW, LLP
TWO EMBARCADERO CENTER
EIGHTH FLOOR
SAN FRANCISCO, CA 94111-3834

EXAMINER

ART UNIT	PAPER NUMBER
3662	

DATE MAILED: 10/05/2005

DECISION ON PETITION FOR RESCISSION OF SECRECY ORDER
(35 U.S.C. 181-188)

PETITION NUMBER 13,155

This is in response to the petition, filed 9-27-05, under 37 CFR 5.4 for rescission of the Secrecy Order.

Upon recommendation of sponsoring Government agency, the petition is Granted.

M. J C

for
Donald T. Hajec
Director, Technology Center 3600
(703) 306-4180

DEPARTMENT OF THE AIR FORCE
AIR FORCE MATERIEL COMMAND LAW OFFICE (AFMC)
WRIGHT-PATTERSON AIR FORCE BASE OHIO

5 October 2005

MEMORANDUM FOR COMMISSIONER FOR PATENTS
U.S. PATENT AND TRADEMARK OFFICE
MAIL STOP L&R
P.O. BOX 1450
ALEXANDRIA VA 22313-1450

FROM: AFMCLO/JAZ, Bldg 11
2240 B St. Rm 100
Wright-Patterson AFB, OH 45433-7109

SUBJECT: Petition No. 13,155 (Patent Applications S/N 10/794,390 and 60/452,287)

1. In response to applicant's petition to modify the secrecy order to permit foreign filing, the Air Force recommends that the Secrecy Orders on the provisional application 60/452,287 and the corresponding non-provisional application 10/794,390 be **RESCINDED.**

2. If you have any questions or need additional information, please contact me.

Petition Granted

RA Lambert

Richard A. Lambert
Patent Attorney
Directorate of Intellectual Property Law
AFMCLO/JAZ
937/255-2838
DSN 785-2838
FAX 937/255-3733
Richard.Lambert@wpafb.af.mil

UNITED STATES PATENT AND TRADEMARK OFFICE

UNITED STATES DEPARTMENT OF COMMERCE
United States Patent and Trademark Office
Address: COMMISSIONER FOR PATENTS
P.O. Box 1450
Alexandria, Virginia 22313-1450
www.uspto.gov

SCHWEGMAN, LUNDBERG & WOESSNER, P.A.
P.O. BOX 2938
MINNEAPOLIS, MN 55402

Mail Date: 04/20/2010

Applicant	: George William Fraser	: DECISION ON REQUEST FOR
Patent Number	: 7585624	: RECALCULATION of PATENT
Issue Date	: 09/08/2009	: TERM ADJUSTMENT IN VIEW
Appliction No	: 10/794,397	: OF WYETH AND NOTICE OF INTENT TO
Filed	: 03/05/2004	: ISSUE CERTIFICATE OF CORRECTION
		:

The Request for Recalculation is **GRANTED** to the extent indicated.

The patent term adjustment has been determined to be **789** days. The USPTO will *sua sponte* issue a certificate of correction reflecting the amount of PTA days determined by the recalculation.

Prior to the issuance of the certificate of correction, the USPTO will afford patentee an opportunity to be heard and request reconsideration. Accordingly, patentee has **one month or thirty (30) days**, whichever is longer, to file a request for reconsideration of this patent term adjustment calculation. See 35 U.S.C. 154(b)(3)(B)(ii) and 37 CFR 1.322(a)(4). No extensions of time will be granted under 37 CFR 1.136.

Patentee should use document code PET.OP if electronically filing a request for reconsideration of this patent term adjustment calculation. The patentee must also include the information required by 37 CFR 1.705(b)(2) and the fee required by 37 CFR 1.18(e). If patentee does not file a timely request for reconsideration of this patent term adjustment calculation including the information required by 37 CFR 1.705(b)(2) and the fee required by 37 CFR 1.18(e), the USPTO will issue a certificate of correction reflecting the PTA determination noted above.

Patentee should be aware that in order to preserve the right to review in the United States District Court for the District of Columbia of the USPTO patent term adjustment determination, patentee must ensure that he or she also take the steps required under 35 U.S.C. 154(b)(4)(A) in a timely manner. Nothing in the request for recalculation should be construed as providing an alternative time frame for commencing a civil action under 35 U.S.C. 154(b)(4)(A).

Any questions concerning this decision should be directed to the Office of Patent Legal Administration at 571-272-7702.

UNITED STATES PATENT AND TRADEMARK OFFICE

Commissioner for Patents
United States Patent and Trademark Office
P.O. Box 1450
Alexandria, VA 22313-1450
www.uspto.gov

FISH & RICHARDSON P.C.
3300 DAIN RAUSCHER PLAZA
MINNEAPOLIS, MN 55402

COPY MAILED

FEB 1 1 2005

OFFICE OF PETITIONS

In re Application of
Jiang et al.
Application No. 10/794,411
Filed: March 4, 2004
Attorney Docket No. 17246-002001
For: Asynchronous Mechanism and Message Pool

DECISION ACCORDING
STATUS UNDER 37 CFR 1.47(a)

This is a decision on the petition under 37 CFR 1.47(a), filed September 27, 2004.

The petition is **granted**.

The above-identified application and papers have been reviewed and found in compliance with 37 CFR 1.47(a). This application is hereby accorded Rule 1.47(a) status.

As provided in Rule 1.47(c), this Office will forward notice of this application's filing to the non-signing inventor at the address given in the petition. Notice of the filing of this application will also be published in the Official Gazette.

Effective June 25, 2004, the Patent and Trademark Office discontinued accepting the appointment of associate attorneys.[1] Therefore, the power of attorney signed by Jennifer Zanocco will not be entered. It should be noted that the only attorney listed on the sheet who does not already have a power of attorney is Mary Ann Dillahunty.

The Office of Initial Patent Examination will be informed of the instant decision and will continue the initial processing of the application.

Telephone inquiries should be directed to Petitions Attorney Steven Brantley at (571) 272-3203.

Charles Steven Brantley
Petitions Attorney
Office of Petitions

[1] See Revision of Power of Attorney and Assignment Practice, 69 Fed. Reg. 29,865 (May 26, 2004).

UNITED STATES PATENT AND TRADEMARK OFFICE

Commissioner for Patents
United States Patent and Trademark Office
P.O. Box 1450
Alexandria, VA 22313-1450
www.uspto.gov

Jingwei Liang
20423 Summercrest Drive
Castro Valley, CA 94552

COPY MAILED

FEB 11 2005

OFFICE OF PETITIONS

In re Application of
Jiang et al.
Application No. 10/794,411
Filed: March 4, 2004
Attorney Docket No. 17246-002001
For: Asynchronous Mechanism and Message Pool

Letter

Dear Mr. Liang:

You are named as a joint inventor in the above identified United States patent application, filed under the provisions of 35 U.S.C. 116 (United States Code), and 37 CFR 1.47(a), Rules of Practice in Patent Cases. Should a patent be granted on the application you will be designated therein as a joint inventor.

As a named inventor you are entitled to inspect any paper in the file wrapper of the application, order copies of all or any part thereof (at a prepaid cost per 37 CFR 1.19) or make your position of record in the application. Alternatively, you may arrange to do any of the preceding through a registered patent attorney or agent presenting written authorization from you. If you care to join the application, counsel of record (see below) would presumably assist you. Joining in the application would entail the filing of an appropriate oath or declaration by you pursuant to 37 CFR 1.63.

Requests for information regarding your application should be directed to the File Information Unit at (703)308-2733. Information regarding how to pay for and order a copy of the application, or a specific paper in the application, should be directed to Certification Division at (703)308-9726 or 1(800)972-6382 (outside the Washington D.C. area).

Telephone inquiries regarding this communication should be directed to Petitions Attorney Steven Brantley at (571) 272-3203.

Charles Steven Brantley
Petitions Attorney
Office of Petitions

cc: FISH & RICHARDSON P.C.
3300 DAIN RAUSCHER PLAZA
MINNEAPOLIS, MN 55402

UNITED STATES PATENT AND TRADEMARK OFFICE

Commissioner for Patents
United States Patent and Trademark Office
P.O. Box 1450
Alexandria, VA 22313-1450
www.uspto.gov

Wei Huang
828 Gregory Court
Fremont, CA 94539

COPY MAILED

FEB 11 2005

OFFICE OF PETITIONS

Letter

In re Application of
Jiang et al.
Application No. 10/794,411
Filed: March 4, 2004
Attorney Docket No. 17246-002001
For: Asynchronous Mechanism and Message Pool

Dear Mr. Huang:

You are named as a joint inventor in the above identified United States patent application, filed under the provisions of 35 U.S.C. 116 (United States Code), and 37 CFR 1.47(a), Rules of Practice in Patent Cases. Should a patent be granted on the application you will be designated therein as a joint inventor.

As a named inventor you are entitled to inspect any paper in the file wrapper of the application, order copies of all or any part thereof (at a prepaid cost per 37 CFR 1.19) or make your position of record in the application. Alternatively, you may arrange to do any of the preceding through a registered patent attorney or agent presenting written authorization from you. If you care to join the application, counsel of record (see below) would presumably assist you. Joining in the application would entail the filing of an appropriate oath or declaration by you pursuant to 37 CFR 1.63.

Requests for information regarding your application should be directed to the File Information Unit at (703)308-2733. Information regarding how to pay for and order a copy of the application, or a specific paper in the application, should be directed to Certification Division at (703)308-9726 or 1(800)972-6382 (outside the Washington D.C. area).

Telephone inquiries regarding this communication should be directed to Petitions Attorney Steven Brantley at (571) 272-3203.

Charles Steven Brantley
Petitions Attorney
Office of Petitions

cc: FISH & RICHARDSON P.C.
3300 DAIN RAUSCHER PLAZA
MINNEAPOLIS, MN 55402

UNITED STATES PATENT AND TRADEMARK OFFICE

Commissioner for Patents
United States Patent and Trademark Office
P.O. Box 1450
Alexandria, VA 22313-1450
www.uspto.gov

Shijun Wu
3F Building C Guohong Plaza
Suite 304 No. A11
North Muxidi Xicheng District
Beijing, P.R. China 100038
CHINA

COPY MAILED

FEB 1 1 2005

OFFICE OF PETITIONS

In re Application of
Jiang et al.
Application No. 10/794,411
Filed: March 4, 2004
Attorney Docket No. 17246-002001
For: Asynchronous Mechanism and Message Pool

Letter

Dear Mr. Shijun Wu:

You are named as a joint inventor in the above identified United States patent application, filed under the provisions of 35 U.S.C. 116 (United States Code), and 37 CFR 1.47(a), Rules of Practice in Patent Cases. Should a patent be granted on the application you will be designated therein as a joint inventor.

As a named inventor you are entitled to inspect any paper in the file wrapper of the application, order copies of all or any part thereof (at a prepaid cost per 37 CFR 1.19) or make your position of record in the application. Alternatively, you may arrange to do any of the preceding through a registered patent attorney or agent presenting written authorization from you. If you care to join the application, counsel of record (see below) would presumably assist you. Joining in the application would entail the filing of an appropriate oath or declaration by you pursuant to 37 CFR 1.63.

Requests for information regarding your application should be directed to the File Information Unit at (703)308-2733. Information regarding how to pay for and order a copy of the application, or a specific paper in the application, should be directed to Certification Division at (703)308-9726 or 1(800)972-6382 (outside the Washington D.C. area).

Telephone inquiries regarding this communication should be directed to Petitions Attorney Steven Brantley at (571) 272-3203.

Charles Steven Brantley
Petitions Attorney
Office of Petitions

cc: FISH & RICHARDSON P.C.
3300 DAIN RAUSCHER PLAZA
MINNEAPOLIS, MN 55402

UNITED STATES PATENT AND TRADEMARK OFFICE

COMMISSIONER FOR PATENTS
UNITED STATES PATENT AND TRADEMARK OFFICE
P.O. BOX 1450
ALEXANDRIA, VA 22313-1450
www.uspto.gov

Paper No.

PATTERSON, THUENTE, SKAAR &
CHRISTENSEN, P.A.
4800 IDS CENTER
80 SOUTH 8TH STREET
MINNEAPOLIS MN 55402-2100

MAILED

AUG 31 2009

OFFICE OF PETITIONS

In re Application of	:	
Borgwarth et al.	:	
Application No. 10/794,416	:	LETTER REGARDING
Filed: March 5, 2004	:	PATENT TERM ADJUSTMENT
Atty Docket No. 1657.101US02	:	

This is in response to the PATENT TERM ADJUSTMENT LETTER OF CANDOR AND GOOD FAITH filed on March 26, 2009. Applicants submit that the correct patent term adjustment to be indicated on the patent is one hundred sixty (160) days, not two hundred forty-nine (249) as calculated by the Office as of the mailing of the initial determination of patent term adjustment.

The request for correction of the initial determination of patent term adjustment (PTA) is **GRANTED**. The determination of PTA at the time of the mailing of the Notice of Allowance is one hundred sixty (160) days.

The Office has updated the PALM (and PAIR) screens to reflect that the Patent Term Adjustment at the time of the mailing of the Notice of Allowance is 160 days. A copy of the updated PALM Screen is enclosed.

On December 30, 2008, the Office mailed the Determination of Patent Term Adjustment under 35 USC 154(b) in the above-identified application. The Notice stated that the patent term adjustment to date is two hundred forty-nine (249) days. On March 26, 2009, applicants submitted the instant comment.

Applicants state that the PTA calculation should be reduced by at least 89 days. Specifically, applicants aver that the filing of a supplemental Information Disclosure Statement (IDS) filed

on December 3, 2008, 89 days after the filing of a reply to a non-final Office action on September 5, 2008, may have been omitted from the PTA calculation.

Upon review, applicants are correct. On September 5, 2008, a response to a non-final Office action was filed. On December 3, 2008, 89 days after the filing of the reply to the non-final Office action, a supplemental IDS was filed.

37 CFR 1.704(c)(8) states that circumstances that constitute a failure of the applicant to engage in reasonable efforts to conclude processing or examination of an application also include the following circumstances, which will result in the following reduction of the period of adjustment set forth in § 1.703 to the extent that the periods are not overlapping: submission of a supplemental reply or other paper, other than a supplemental reply or other paper expressly requested by the examiner, after a reply has been filed, in which case the period of adjustment set forth in § 1.703 shall be reduced by the number of days, if any, beginning on the day after the date the initial reply was filed and ending on the date that the supplemental reply or other such paper was filed.

The IDS did not contain the statement in accordance with 37 CFR 1.704(d). The IDS was not expressly requested by the examiner.

Accordingly, a period of reduction of 89 days will be entered.

In view thereof, the correct determination of PTA at the time of the mailing of the Notice of Allowance is **one hundred sixty (160) days** (322 days of PTO delay, reduced by 162 (73+89) days of Applicant delay).

As the instant letter was submitted to advise the Office of an error in Applicants' favor, the $200.00 application fee under 37 CFR 1.705(b) is not required, and has not been charged.

The Office thanks Applicants for their good faith and candor in bringing this matter to the attention of the Office.

The application is being forwarded to the Office of Data Management for issuance of a patent. The patent term adjustment indicated on the patent (as shown on the Issue Notification mailed about three weeks prior to patent issuance) will include any additional adjustment accrued both for Office delay in

issuing the patent more than four months after payment of the issue fee and satisfaction of all outstanding requirements, and for the Office taking in excess of three years to issue the patent (to the extent that the three-year period does not overlap with periods already accorded).

Telephone inquiries specific to this matter should be directed to Douglas I. Wood, Senior Petitions Attorney, at (571) 272-3231.

Nancy Johnson
Senior Petitions Attorney
Office of Petitions

Enclosure: Copy of updated PALM Screen

Day : Friday
Date: 8/28/2009

PALM INTRANET

Time: 13:48:26

PTA Calculations for Application: 10/794416			
Application Filing Date:	03/05/2004	PTO Delay (PTO):	322
Issue Date of Patent:		Three Years:	0
Pre-Issue Petitions:	0	Applicant Delay (APPL):	73
Post-Issue Petitions:	0	Total PTA (days):	160
PTO Delay Adjustment:	-89		

File Contents History

Number	Date	Contents Description	PTO	APPL	START
90	08/28/2009	ADJUSTMENT OF PTA CALCULATION BY PTO		89	
83	12/30/2008	MAIL NOTICE OF ALLOWANCE			
82	12/25/2008	ISSUE REVISION COMPLETED			
81	12/18/2008	ALLOWED CASE RETURNED TO THE EXAMINER FOR CLERICAL PROCESSING			
80	12/18/2008	DOCUMENT VERIFICATION			
79	12/18/2008	NOTICE OF ALLOWANCE DATA VERIFICATION COMPLETED			
78	12/15/2008	NOTICE OF ALLOWABILITY			
77	12/03/2008	INFORMATION DISCLOSURE STATEMENT CONSIDERED			
73	12/03/2008	INFORMATION DISCLOSURE STATEMENT (IDS) FILED			
72	10/20/2008	DATE FORWARDED TO EXAMINER			
71	09/05/2008	RESPONSE AFTER NON-FINAL ACTION			
70	06/13/2008	MAIL NON-FINAL REJECTION			
69	06/11/2008	NON-FINAL REJECTION			
68	04/18/2008	DATE FORWARDED TO EXAMINER			
67	03/12/2008	RCE- AF PROCESSED			
66	04/18/2008	DATE FORWARDED TO EXAMINER			
65	04/10/2008	REQUEST FOR CONTINUED EXAMINATION (RCE)		29	57
64	04/18/2008	DISPOSAL FOR A RCE/CPA/129 (EXPRESS ABANDONMENT IF CPA)			
63	04/10/2008	REQUEST FOR EXTENSION OF TIME - GRANTED			
62	04/10/2008	WORKFLOW - REQUEST FOR RCE - BEGIN			
61	03/31/2008	MAIL ADVISORY ACTION (PTOL - 303)			

60	03/27/2008	ADVISORY ACTION (PTOL-303)			
59	03/20/2008	DATE FORWARDED TO EXAMINER			
58	03/12/2008	AMENDMENT AFTER FINAL REJECTION			
57	12/12/2007	MAIL FINAL REJECTION (PTOL - 326)			
56	12/10/2007	FINAL REJECTION			
55	09/25/2007	DATE FORWARDED TO EXAMINER			
54	09/18/2007	RESPONSE TO ELECTION / RESTRICTION FILED			
53	08/22/2007	MAIL RESTRICTION REQUIREMENT			
52	08/22/2007	REQUIREMENT FOR RESTRICTION / ELECTION			
51	06/30/2007	DATE FORWARDED TO EXAMINER			
50	06/22/2007	RESPONSE AFTER NON-FINAL ACTION			
49	04/30/2007	MAIL NON-FINAL REJECTION			
48	04/27/2007	NON-FINAL REJECTION			
47	02/05/2007	INFORMATION DISCLOSURE STATEMENT CONSIDERED			
46	02/05/2007	REFERENCE CAPTURE ON IDS			
45.7	02/05/2007	INFORMATION DISCLOSURE STATEMENT (IDS) FILED		0	41
45	02/05/2007	INFORMATION DISCLOSURE STATEMENT (IDS) FILED			
44	02/15/2007	DATE FORWARDED TO EXAMINER			
43	02/05/2007	RCE- AF PROCESSED			
42	02/15/2007	DATE FORWARDED TO EXAMINER			
41	02/05/2007	REQUEST FOR CONTINUED EXAMINATION (RCE)		13	32
40	02/15/2007	DISPOSAL FOR A RCE/CPA/129 (EXPRESS ABANDONMENT IF CPA)			
39	02/05/2007	REQUEST FOR EXTENSION OF TIME - GRANTED			
38	02/05/2007	WORKFLOW - REQUEST FOR RCE - BEGIN			
37	01/26/2007	MAIL ADVISORY ACTION (PTOL - 303)			
36	01/25/2007	ADVISORY ACTION (PTOL-303)			
35	01/23/2007	DATE FORWARDED TO EXAMINER			
34	12/22/2006	AMENDMENT AFTER FINAL REJECTION			
33	12/22/2006	NEW OR ADDITIONAL DRAWING FILED			
32	10/23/2006	MAIL FINAL REJECTION (PTOL - 326)			
31	10/16/2006	FINAL REJECTION			
30	08/01/2006	DATE FORWARDED TO EXAMINER			
29	07/24/2006	RESPONSE AFTER NON-FINAL ACTION		31	27

28	07/24/2006	REQUEST FOR EXTENSION OF TIME - GRANTED			
27	03/23/2006	MAIL NON-FINAL REJECTION	322		-1
26	03/20/2006	NON-FINAL REJECTION			
25	11/30/2004	INFORMATION DISCLOSURE STATEMENT CONSIDERED			
24	01/30/2006	MISCELLANEOUS INCOMING LETTER			
23	09/16/2005	MISCELLANEOUS INCOMING LETTER			
22	05/12/2005	MISCELLANEOUS INCOMING LETTER			
21	05/11/2005	CASE DOCKETED TO EXAMINER IN GAU			
20.7	11/30/2004	ELECTRONIC INFORMATION DISCLOSURE STATEMENT			
20	11/30/2004	INFORMATION DISCLOSURE STATEMENT (IDS) FILED			
19	02/22/2005	RECEIPT OF ALL ACKNOWLEDGEMENT LETTERS			
18	11/19/2004	CASE DOCKETED TO EXAMINER IN GAU			
17	10/20/2004	IFW TSS PROCESSING BY TECH CENTER COMPLETE			
16	10/20/2004	CASE DOCKETED TO EXAMINER IN GAU			
15	10/05/2004	AGENCY REFERRAL LETTER MAILED			
14	08/30/2004	RECEIPT OF ALL ACKNOWLEDGEMENT LETTERS			
13	08/30/2004	RECEIPT OF ACKNOWLEDGMENT LETTER			
12	06/24/2004	APPLICATION RETURN FROM OIPE			
11	06/24/2004	APPLICATION RETURN TO OIPE			
10	06/24/2004	APPLICATION DISPATCHED FROM OIPE			
9	06/24/2004	APPLICATION IS NOW COMPLETE			
8	06/11/2004	PAYMENT OF ADDITIONAL FILING FEE/PREEXAM			
7	06/11/2004	A STATEMENT BY ONE OR MORE INVENTORS SATISFYING THE REQUIREMENT UNDER 35 USC 115, OATH OF THE APPLIC			
6	05/24/2004	NOTICE MAILED--APPLICATION INCOMPLETE--FILING DATE ASSIGNED			
5	04/12/2004	REFERRED BY L&R FOR THIRD-LEVEL SECURITY REVIEW. AGENCY REFERRAL LETTER GENERATED			
4	04/05/2004	REFERRED TO LEVEL 2 (LARS) BY OIPE CSR			
3	04/05/2004	CASE CLASSIFIED BY OIPE			
2	03/25/2004	IFW SCAN & PACR AUTO SECURITY REVIEW			

1	03/05/2004	INITIAL EXAM TEAM NN			

Search Another: Application# Search

EXPLANATION OF PTA CALCULATION

EXPLANATION OF PTE CALCULATION

To go back, right click here and select Back. To go forward, right click here and select Forward. To refresh, right click here and select Refresh.

Back to OASIS | Home page

UNITED STATES PATENT AND TRADEMARK OFFICE

Commissioner for Patents
United States Patent and Trademark Office
P.O. Box 1450
Alexandria, VA 22313-1450
www.uspto.gov

MAILED

APR 13 2010

OFFICE OF PETITIONS

LAW OFFICE OF MICHAEL A. SANZO, LLC
15400 CALHOUN DR.
SUITE 125
ROCKVILLE MD 20855

In re Patent No. 7,575,905	:
Rieping et al.	: DECISION ON REQUEST FOR
Issue Date: August 18, 2009	: RECONSIDERATION OF
Application No. 10/794,417	: PATENT TERM ADJUSTMENT
Filed: March 8, 2004	: AND NOTICE OF INTENT
Attorney Docket No. 7601/80987	: TO ISSUE CERTIFICATE OF
Title: PROCESS FOR L-AMINO ACID	: CORRECTION
PRODUCTION USING	:
ENTEROBACTERIACEAE STRAINS WITH	:
ENHANCED YIB	:

This is a decision on the petition filed on October 19, 2009, which is being treated as a petition under 37 CFR 1.705(d) requesting that the patent term adjustment indicated on the above-identified patent be corrected to indicate that the term of the above-identified patent is extended or adjusted by an additional four hundred seventy-eight (478) days.

The petition to correct the patent term adjustment indicated on the above-identified patent is **GRANTED TO THE EXTENT INDICATED HEREIN.**

The period of adjustment to which the patent is entitled under 37 CFR 1.702(a) is 296 (277 days + 19 days).

The period of adjustment to which the patent is entitled under 37 CFR 1.702(b) is 690 days (March 9, 2007 to January 26, 2009 the day before the filing of the request for continued examination (RCE)).

There are nineteen (19) days of overlap between 37 CFR 1.702(a) and 37 CFR 1.702(b) (May 26, 2008 to June 13, 2008).

Patentees' calculation does not reflect the reduction of 166 days pursuant to 37 CFR 1.703(b)(4) in connection with the Notice of Appeal filed May 13, 2008. The reduction commenced May 13, 2007; the date that the Notice of Appeal was filed, and ended October 25, 2007, the day the non-final Office action was mailed. See, 37 CFR 1.703(b)(4).

In view thereof, the patent is entitled to an overall adjustment of 732 days.

The application is being forwarded to the Certificate of Corrections Branch for issuance of a certificate of correction. The Office will issue a certificate of correction indicating that the term of the above-identified patent is extended or adjusted by seven hundred thirty-two **(732)** days.

The Office will *sua sponte* issue a certificate of correction. Pursuant to 37 CFR 1.322, the Office will not issue a certificate of correction without first providing assignee or patentee an opportunity to be heard. Accordingly, patentees are given **one (1) month or thirty (30) days**, whichever is longer, from the mail date of this decision to respond. No extensions of time will be granted under § 1.136.

The Office acknowledges submission of the $200.00 fee set forth in 37 CFR 1.18(e). No additional fees are required.

Telephone inquiries specific to this matter should be directed to Petitions Attorney, Charlema Grant at (571) 272-3215.

Anthony Knight
Director
Office of Petitions

Enclosure: Copy of DRAFT Certificate of Correction

UNITED STATES PATENT AND TRADEMARK OFFICE

CERTIFICATE OF CORRECTION

PATENT : 7,575,905 B2

DATED : **August 18, 2009** **DRAFT**

INVENTOR(S) : Rieping et al.

It is certified that error appears in the above-identified patent and that said Letters Patent is hereby corrected as shown below:

On the cover page,

[*] Notice: Subject to any disclaimer, the term of this patent is extended or adjusted under 35 USC 154(b) by 622 days

Delete the phrase "by 622 days" and insert – by 732 days--

UNITED STATES PATENT AND TRADEMARK OFFICE

Commissioner for Patents
United States Patent and Trademark Office
P.O. Box 1450
Alexandria, VA 22313-1450
www.uspto.gov

MERCHANT & GOULD P.C.
P.O. BOX 2903
MINNEAPOLIS MN 55402-0903

COPY MAILED

APR 0 6 2007

OFFICE OF PETITIONS

In re Application of
BALZ, Eric et al.
Application No. 10/794,429
Filed: March 05, 2004
Attorney Docket No. **163.1572USI2**

DECISION ON PETITION
TO WITHDRAW
FROM RECORD

This is a decision on the Request to Withdraw as attorney or agent of record under 37 C.F.R. § 1.36(b), filed January 22, 2007.

The request is **APPROVED**.

A grantable request to withdraw as attorney/agent of record must be signed by every attorney/agent seeking to withdraw or contain a clear indication that one attorney is signing on behalf of another/others. A request to withdraw will not be approved unless at least 30 (thirty) days would remain between the date of approval and the later of the expiration date of a time to file a response or the expiration date of the maximum time period which can be extended under 37 C.F.R. § 1.136(a).

The request was signed by Sarah M. Monfeldt. The correspondence address of record remains unchanged.

Telephone inquiries concerning this decision should be directed to Tredelle Jackson at 571-272-2783.

Monica A. Graves
Petitions Examiner
Office of Petitions

UNITED STATES PATENT AND TRADEMARK OFFICE

Commissioner for Patents
United States Patent and Trademark Office
P.O. Box 1450
Alexandria, VA 22313-1450
www.uspto.gov

TOWNSEND AND TOWNSEND AND CREW, LLP (018563)
TWO EMBARCADERO CENTER, EIGHTH FLOOR
SAN FRANCISCO, CA 94111-3834

COPY MAILED
DEC 3 1 2008

In re Application of	:	
KNOPP, Peter G.	:	
Application No. 10/794,432	:	DECISION GRANTING PETITION
Filed: March 4, 2004	:	UNDER 37 CFR 1.313(c)(2)
Attorney Docket No. **018563-013810US**	:	

This is a decision on the petition under 37 CFR 1.313(c)(2), filed December 22, 2008, to withdraw the above-identified application from issue after payment of the issue fee.

The petition is **GRANTED**.

The above-identified application is withdrawn from issue for consideration of a submission under 37 CFR 1.114 (request for continued examination). *See* 37 CFR 1.313(c)(2).

Petitioner is advised that the issue fee paid on October 7, 2008 cannot be refunded. If, however, this application is again allowed, petitioner may request that it be applied towards the issue fee required by the new Notice of Allowance.[1]

Telephone inquiries should be directed to the undersigned at (571) 272-7253.

This application is being referred to Technology Center AU 3732 for processing of the request for continued examination under 37 CFR 1.114 and for consideration of the concurrently filed information disclosure statement.

/Monica A. Graves/
Petitions Examiner
Office of Petitions

---

[1] *The request to apply the issue fee to the new Notice may be satisfied by completing and returning the new Part B – Fee(s) Transmittal Form (along with any balance due at the time of submission). Petitioner is advised that the Issue Fee Transmittal Form* ***must*** *be completed and timely submitted to avoid abandonment of the application.*

UNITED STATES PATENT AND TRADEMARK OFFICE

Commissioner for Patents
United States Patent and Trademark Office
P.O. Box 1450
Alexandria, VA 22313-1450
www.uspto.gov

INTEL/BSTZ
BLAKELY SOKOLOFF TAYLOR & ZAFMAN LLP
1279 OAKMEAD PARKWAY
SUNNYVALE CA 94085-4040

MAILED

MAR 23 2010

OFFICE OF PETITIONS

In re Application of	:	
Sundararajan et al.	:	
Application No. 10/794,436	:	DECISION ON PETITION
Filed: March 5, 2004	:	
Attorney Docket No. 42P18074	:	

This is a decision on the petition under the unintentional provisions of 37 CFR 1.137(b), filed January 26, 2010, to revive the above-identified application.

The petition is **GRANTED**.

This application became abandoned for failure to timely pay the issue and publication fees on or before January 15, 2010, as required by the Notice of Allowance and Fee(s) Due mailed October 15, 2009. Accordingly, the date of abandonment of this application is January 16, 2010. A Notice of Abandonment was mailed February 2, 2010.

The petition satisfies the requirements of 37 CFR 1.137(b) in that petitioner has supplied (1) the reply in the form of payment of the issue fee of $1,510.00 and publication fee of $300.00; (2) the petition fee of $1,620.00; and (3) a proper statement of unintentional delay.

Further, 37 CFR 1.137(b)(3) requires a statement that the entire delay in filing the required reply from the due date for the reply until the filing of a grantable petition pursuant to 37 CFR 1.137(b) was unintentional. If the statement contained in the instant petition varies from the language required by 37 CFR 1.137(b)(3), the statement contained in the instant petition is being construed as the statement required by 37 CFR 1.137(b)(3) and petitioner must notify the Office if this is **not** a correct interpretation of the statement contained in the instant petition.

The address given on the petition differs from the address of record. A courtesy copy of this decision is being mailed to the address given on the petition; however, the Office will mail all future correspondence solely to the address of record.

Telephone inquiries concerning this decision should be directed to the undersigned at (571) 272-7751.

This application is being referred to the Office of Data Management for processing into a patent.

Joan Olszewski

Joan Olszewski
Petitions Examiner
Office of Petitions

cc: Edwin H. Taylor
12400 Wilshire Boulevard, 7th FL
Los Angeles, CA 90025-1026

03 SEP 2004

UNITED STATES PATENT and TRADEMARK OFFICE

COMMISSIONER FOR PATENTS
UNITED STATES PATENT AND TRADEMARK OFFICE
P.O BOX 1450
ALEXANDRIA, VA 22313-1450
www.uspto.gov

James C. Lydon
100 Daingerfield Road
Suite 100
Alexandria, VA 22314

In re Application of	:	DECISION ON
NOBILEAU C. Philippe	:	
Application No.: 10/794,441	:	
Filing Date: 05 March 2004	:	PETITION UNDER
Attorney's Docket No.: NOBI-001	:	
For: APPARATUS AND METHOD FOR	:	
INSTALLING A BRANCH JUNCTION	:	
FROM A MAIN WELL	:	37 CFR 1.137(b)

This is in response to "Petition For Revival Of Unintentionally Abandoned Application Pursuant To 37 CFR 1.137(b)" filed on 05 March 2004.

Applicants' petition under 37 CFR 1.137(b) filed 05 March 2004 to revive international application PCT/IB98/01394 abandoned under 35 U.S.C. 371(d) is hereby **DISMISSED** as to the National stage in the United States of America as follows:

On 09 September 1997, a Demand electing the United States was filed in this international application. International application PCT/IB98/01394 became abandoned as to the United States of America at midnight on 09 March 2000 for failure to pay the basic national fee. The filing of the present continuing application under 35 U.S.C. 111 is not accepted as the appropriate response under 37 CFR 1.137(b) (See MPEP § 711.03(c)) because there appears to be a question whether the delay was unintentional and additional information will be necessary to explain the delay in filing the petition. The record shows that Philippe C. Nobileau became aware that the above international application was abandoned at least from the year 2000 and because of certain circumstances he was kept away from the management of his pending applications, which was handled by his employees but it unclear why this caused a delay of 4 years to file the current continuing application. As such, applicant's delay appears to be a deliberate inaction to prosecute the application in a timely manner; that is, he intentionally delayed the prosecution of this application.

Accordingly, applicant is required to provide an explanation why the entire delay in filing the petition should be construed as an unintentional delay.

For reasons above, the petition under 37 CFR 1.137(b) is **DISMISSED** without prejudice.

If reconsideration of the merits of the petition under 37 CFR 1.137(b) is desired, applicant must file a request for reconsideration within **TWO (2) MONTHS** from the mail date of this Decision. Failure to timely submit the proper reply will result in abandonment of the application. Any reconsideration request should include a cover letter entitled "Second Renewed Petition Under 37 CFR 1.137(b)."

Any further correspondence with respect to this matter should be addressed to the Mail Stop PCT, Commissioner for Patents, Office of PCT Legal Administration, P.O. Box 1450, Alexandria, Virginia 22313-1450, with the contents of the letter marked to the attention of the Office of PCT Legal Administration.

Rafael Bacares
PCT Legal Examiner
PCT Legal Office
Telephone: (703) 308-6312
Facsimile: (703) 308-6459

02 FEB 2005

UNITED STATES PATENT and TRADEMARK OFFICE

COMMISSIONER FOR PATENTS
UNITED STATES PATENT AND TRADEMARK OFFICE
P.O BOX 1450
ALEXANDRIA, VA 22313-1450
www.uspto.gov

James C. Lydon
100 Daingerfield Road
Suite 100
Alexandria, VA 22314

In re Application of	:	DECISION ON RENEWED
NOBILEAU C. Philippe	:	
Application No.: 10/794,441	:	
Filing Date: 05 March 2004	:	PETITION UNDER
Attorney's Docket No.: NOBI-001	:	
For: APPARATUS AND METHOD FOR	:	
INSTALLING A BRANCH JUNCTION	:	
FROM A MAIN WELL	:	37 CFR 1.137(b)

This is in response to "REQUEST FOR RECONSIDERATION" filed on 01 November 2004, which is being treated as a renewed petition under 37 CFR 1.137(b).

Applicant's petition under 37 CFR 1.137(b) filed 05 March 2004 to revive international application PCT/IB98/01394 abandoned under 35 U.S.C. 371(d) was hereby **DISMISSED** as to the National stage in the United States of America because it was unclear why there was a delay of 4 years to file the current continuing application.

On 09 September 1997, a Demand electing the United States was filed in this international application. International application PCT/IB98/01398 became abandoned as to the United States of America at midnight on 09 March 2000 for failure to pay the basic national fee.

On 01 November 2004 applicant filed a renewed petition under 37 CFR 1.137(b) to revive international application PCT/US01/18261 abandoned under 35 U.S.C. 371(d) is hereby **GRANTED** as to the National stage in the United States of America since applicant explained why the entire delay in filing the petition was unintentional.

Since the above-identified application has been abandoned for an extended period of time, the Patent and Trademark Office is relying on petitioner's duty of candor and good faith and accepting the statement that the entire delay in filing the required reply from the due date for the reply until the filing of a grantable petition pursuant to 37 CFR 1.137(b) was unintentional. See Changes to Patent Practice and Procedure, 62 Fed. Reg. At 53160 and 53178, 1203 Off. Gaz. Pat. Office at 88 and 103 (responses to comments 64 and 109)(applicant obligated under 37 CFR 10.18 to inquire into the underlying facts and circumstances when providing the statement required by 37 CFR 1.137(b) to the Patent and Trademark Office).

The filing of the present continuing application under 35 U.S.C. 111 is accepted as the appropriate response under 37 CFR 1.137(b) (See MPEP § 711.03(c)).

International application PCT/IB98/01398 is being revived for purposes of continuity only and since continuity has been established by this decision reviving the international application, the international application is again abandoned in favor of the present continuing application number 10/794,441.

This application is being forward to Office Initial Patent Examination (OIPE) for continued processing.

Rafael Bacares
PCT Legal Examiner
PCT Legal Office
Telephone: (571) 272-3276
Facsimile: (571) 273-0459

UNITED STATES PATENT AND TRADEMARK OFFICE

Commissioner for Patents
United States Patent and Trademark Office
P.O. Box 1450
Alexandria, VA 22313-1450
www.uspto.gov

JAMES C. LYDON
100 DAINGERFIELD ROAD
SUITE 100
ALEXANDRIA VA 22314

COPY MAILED

JUL 2 0 2006

OFFICE OF PETITIONS

In re Application of	:	
Philippe C. Nobileau	:	
Application No. 10/794,441	:	DECISION ON PETITION
Filed: March 5, 2004	:	UNDER 37 CFR 1.78(a)(3)
Attorney Docket No. NOBI-001	:	

This is a decision on the petition under 37 CFR 1.78(a)(3), filed March 28, 2006, to accept an unintentionally delayed claim under 35 U.S.C. § 120 for the benefit of priority to the prior-filed nonprovisional applications set forth in the amendment filed with the petition.

The petition is **GRANTED**.

A petition for acceptance of a claim for late priority under 37 CFR 1.78(a)(3) is only applicable to those applications filed on or after November 29, 2000. Further, the petition is appropriate only after the expiration of the period specified in 37 CFR 1.78(a)(2)(ii). In addition, the petition under 37 CFR 1.78(a)(3) must be accompanied by:

(1) the reference required by 35 U.S.C. § 120 and 37 CFR 1.78(a)(2)(i) of the prior-filed application, unless previously submitted;
(2) the surcharge set forth in § 1.17(t); and
(3) a statement that the entire delay between the date the claim was due under 37 CFR 1.78(a)(2)(ii) and the date the claim was filed was unintentional. The Director may require additional information where there is a question whether the delay was unintentional.

All of the above requirements having been satisfied, the late claim for priority under 35 U.S.C. § 120 is accepted as being unintentionally delayed.

The granting of the petition to accept the delayed benefit claim to the prior-filed applications under 37 CFR 1.78(a)(3) should not be construed as meaning that this application is entitled to the benefit of the prior-filed applications. In order for this application to be entitled to the benefit of the prior-filed applications, all other requirements under 35 U.S.C. § 120 and 37 CFR 1.78(a)(1) and (a)(2) must be met. Similarly, the fact that the corrected Filing Receipt

accompanying this decision on petition includes the prior-filed applications should not be construed as meaning that applicant is entitled to the claim for benefit of priority to the prior-filed applications noted thereon. Accordingly, the examiner will, in due course, consider this benefit claim and determine whether the application is entitled to the benefit of the earlier filing date.

A corrected Filing Receipt, which includes the priority claim to the prior-filed nonprovisional applications, accompanies this decision on petition.

Any inquiries concerning this decision may be directed to the undersigned at (571) 272-3208. All other inquiries concerning either the examination procedures or status of the application should be directed to the Technology Center.

This application is being forwarded to Technology Center Art Unit 3672 for consideration by the examiner of applicant's entitlement to claim benefit of priority under 35 U.S.C. § 120 to the prior-filed applications.

Karen Creasy

Karen Creasy
Petitions Examiner
Office of Petitions

ATTACHMENT: Corrected Filing Receipt

UNITED STATES PATENT AND TRADEMARK OFFICE

UNITED STATES DEPARTMENT OF COMMERCE
United States Patent and Trademark Office
Address: COMMISSIONER FOR PATENTS
P.O. Box 1450
Alexandria, Virginia 22313-1450
www.uspto.gov

APPL NO.	FILING OR 371 (c) DATE	ART UNIT	FIL FEE REC'D	ATTY.DOCKET NO	DRAWINGS	TOT CLMS	IND CLMS
10/794,441	03/05/2004	3672	710	NOBI-001	7	16	2

CONFIRMATION NO. 8958
CORRECTED FILING RECEIPT
OC000000019676921
OC000000019676921

32954
JAMES C. LYDON
100 DAINGERFIELD ROAD
SUITE 100
ALEXANDRIA, VA 22314

Date Mailed: 07/19/2006

Receipt is acknowledged of this regular Patent Application. It will be considered in its order and you will be notified as to the results of the examination. Be sure to provide the U.S. APPLICATION NUMBER, FILING DATE, NAME OF APPLICANT, and TITLE OF INVENTION when inquiring about this application. Fees transmitted by check or draft are subject to collection. Please verify the accuracy of the data presented on this receipt. **If an error is noted on this Filing Receipt, please mail to the Commissioner for Patents P.O. Box 1450 Alexandria Va 22313-1450. Please provide a copy of this Filing Receipt with the changes noted thereon. If you received a "Notice to File Missing Parts" for this application, please submit any corrections to this Filing Receipt with your reply to the Notice. When the USPTO processes the reply to the Notice, the USPTO will generate another Filing Receipt incorporating the requested corrections (if appropriate).**

Applicant(s)

Philippe C. Nobileau, Villefranche/Mer, FRANCE;

Power of Attorney:

James Lydon--30082

Domestic Priority data as claimed by applicant

This application is a CON of PCT/IB98/01394 09/08/1998
which is a CON of 09/148,667 09/04/1998 ABN
which is a CIP of 08/925,971 09/09/1997 PAT 5,979,560

Foreign Applications

If Required, Foreign Filing License Granted: 05/26/2004

The country code and number of your priority application, to be used for filing abroad under the Paris Convention, is US10/794,441

Projected Publication Date: Not Applicable

Non-Publication Request: No

Early Publication Request: No

**** SMALL ENTITY ****

Title

APPARATUS AND METHOD FOR INSTALLING A BRANCH JUNCTION FROM A MAIN WELL

Preliminary Class

166

PROTECTING YOUR INVENTION OUTSIDE THE UNITED STATES

Since the rights granted by a U.S. patent extend only throughout the territory of the United States and have no effect in a foreign country, an inventor who wishes patent protection in another country must apply for a patent in a specific country or in regional patent offices. Applicants may wish to consider the filing of an international application under the Patent Cooperation Treaty (PCT). An international (PCT) application generally has the same effect as a regular national patent application in each PCT-member country. The PCT process **simplifies** the filing of patent applications on the same invention in member countries, but **does not result** in a grant of "an international patent" and does not eliminate the need of applicants to file additional documents and fees in countries where patent protection is desired.

Almost every country has its own patent law, and a person desiring a patent in a particular country must make an application for patent in that country in accordance with its particular laws. Since the laws of many countries differ in various respects from the patent law of the United States, applicants are advised to seek guidance from specific foreign countries to ensure that patent rights are not lost prematurely.

Applicants also are advised that in the case of inventions made in the United States, the Director of the USPTO must issue a license before applicants can apply for a patent in a foreign country. The filing of a U.S. patent application serves as a request for a foreign filing license. The application's filing receipt contains further information and guidance as to the status of applicant's license for foreign filing.

Applicants may wish to consult the USPTO booklet, "General Information Concerning Patents" (specifically, the section entitled "Treaties and Foreign Patents") for more information on timeframes and deadlines for filing foreign patent applications. The guide is available either by contacting the USPTO Contact Center at 800-786-9199, or it can be viewed on the USPTO website at http://www.uspto.gov/web/offices/pac/doc/general/index.html.

For information on preventing theft of your intellectual property (patents, trademarks and copyrights), you may wish to consult the U.S. Government website, http://www.stopfakes.gov. Part of a Department of Commerce initiative, this website includes self-help "toolkits" giving innovators guidance on how to protect intellectual property in specific countries such as China, Korea and Mexico. For questions regarding patent enforcement issues, applicants may call the U.S. Government hotline at 1-866-999-HALT (1-866-999-4158).

LICENSE FOR FOREIGN FILING UNDER
Title 35, United States Code, Section 184
Title 37, Code of Federal Regulations, 5.11 & 5.15

GRANTED

The applicant has been granted a license under 35 U.S.C. 184, if the phrase "IF REQUIRED, FOREIGN FILING LICENSE GRANTED" followed by a date appears on this form. Such licenses are issued in all applications where the conditions for issuance of a license have been met, regardless of whether or not a license may be required as set forth in 37 CFR 5.15. The scope and limitations of this license are set forth in 37 CFR 5.15(a) unless an earlier license has been issued under 37 CFR 5.15(b). The license is subject to revocation upon written notification. The date indicated is the effective date of the license, unless an earlier license of similar scope has been granted under 37 CFR 5.13 or 5.14.

This license is to be retained by the licensee and may be used at any time on or after the effective date thereof unless it is revoked. This license is automatically transferred to any related applications(s) filed under 37 CFR 1.53(d). This license is not retroactive.

The grant of a license does not in any way lessen the responsibility of a licensee for the security of the subject matter as imposed by any Government contract or the provisions of existing laws relating to espionage and the national security or the export of technical data. Licensees should apprise themselves of current regulations especially with respect to certain countries, of other agencies, particularly the Office of Defense Trade Controls, Department of State (with respect to Arms, Munitions and Implements of War (22 CFR 121-128)); the Bureau of Industry and Security, Department of Commerce (15 CFR parts 730-774); the Office of Foreign Assets Control, Department of Treasury (31 CFR Parts 500+) and the Department of Energy.

NOT GRANTED

No license under 35 U.S.C. 184 has been granted at this time, if the phrase "IF REQUIRED, FOREIGN FILING LICENSE GRANTED" DOES NOT appear on this form. Applicant may still petition for a license under 37 CFR 5.12, if a license is desired before the expiration of 6 months from the filing date of the application. If 6 months has lapsed from the filing date of this application and the licensee has not received any indication of a secrecy order under 35 U.S.C. 181, the licensee may foreign file the application pursuant to 37 CFR 5.15(b).

UNITED STATES PATENT AND TRADEMARK OFFICE

Commissioner for Patents
United States Patent and Trademark Office
P.O. Box 1450
Alexandria, VA 22313-1450
www.uspto.gov

FISH & RICHARDSON PC
P O BOX 1022
MINNEAPOLIS, MN 55440-1022

COPY MAILED

NOV 2 2 2005

OFFICE OF PETITIONS

In re Application of	:
Alexei A. Erchak et al	:
Application No. 10/794,452	: DECISION GRANTING PETITION
Filed: March 5, 2004	: UNDER 37 CFR 1.313(c)(2)
Attorney Docket No. 16459-015001	:

This is a decision on the petition, filed November 21, 2005, under 37 CFR 1.313(c)(2) to withdraw the above-identified application from issue after payment of the issue fee.

The petition is **GRANTED**.

The above-identified application is withdrawn from issue for consideration of a submission under 37 CFR 1.114 (request for continued examination). See 37 CFR 1.313(c)(2).

Petitioner is advised that the issue fee paid on October 20, 2005 in the above-identified application cannot be refunded. If, however, the above-identified application is again allowed, petitioner may request that it be applied towards the issue fee required by the new Notice of Allowance.[1]

Telephone inquiries should be directed to the undersigned at (571) 272-3218.

This matter is being referred to Technology Center AU 2891 for processing of the request for continued examination under 37 CFR 1.114 and for consideration of the Information Disclosure Statement.

Frances Hicks
Petitions Examiner
Office of Petitions

---

[1] *The request to apply the issue fee to the new Notice may be satisfied by completing and returning the new Issue Fee Transmittal Form PTOL-85(b) (along with any balance due at the time of payment), which includes the following language thereon: "Commissioner for Patents is requested to apply the Issue Fee and Publication Fee (if any) or re-apply any previously paid issue fee to the application identified above." Petitioner is advised that, whether a fee is indicated as being due or not, the Issue Fee Transmittal Form* ***must*** *be completed and timely submitted to avoid abandonment. Note the language in bold text on the first page of the Notice of Allowance and Fee(s) Due (PTOL-85).*

SPE RESPONSE FOR CERTIFICATE OF CORRECTION

Paper No.: _____

DATE : March 5, 2009

TO SPE OF : ART UNIT 2814

SUBJECT : Request for Certificate of Correction for Appl. No.: 10/794472 / 7297614

Please respond to this request for a certificate of correction within 7 days.

FOR IFW FILES: Should Priority be added?

Please review the requested changes/corrections as shown in the **COCIN** document(s) in the IFW application image. No new matter should be introduced, nor should the scope or meaning of the claims be changed.

Please complete the response (see below) and forward the completed response to scanning using document code **COCX**.

FOR PAPER FILES:

Please review the requested changes/corrections as shown in the attached certificate of correction. Please complete this form (see below) and forward it with the file to:

Certificates of Correction Branch (CofC)
South Tower - 9A22
Palm Location 7580

Magdalene Talley
Certificates of Correction Branch
703-308-9390 ext. 120

Thank You For Your Assistance

The request for issuing the above-identified correction(s) is hereby:
Note your decision on the appropriate box.

- ☒ **Approved** — **All** changes apply.
- ☐ **Approved in Part** — Specify below which changes **do not** apply.
- ☐ **Denied** — State the reasons for denial below.

Comments: No new matter has been introduced nor has the scope or meaning of the claims been changed.

THAO XUAN LE
SUPERVISORY PATENT EXAMINER 2892
SPE Art Unit

UNITED STATES PATENT AND TRADEMARK OFFICE

Commissioner for Patents
United States Patent and Trademark Office
P.O. Box 1450
Alexandria, VA 22313-1450
www.uspto.gov

DARBY & DARBY P.C.
P.O. BOX 5257
NEW YORK, NY 10150-5257

COPY MAILED

MAR 1 4 2005

OFFICE OF PETITIONS

ON PETITION

In re Application of :
Yoichi Ishikawa et al :
Application No. 10/794,477 :
Filed: March 5, 2004 :
Attorney Docket No. 09613/0200857-US0 :

This is a decision on the petition, filed March 8, 2005, under 37 CFR 1.313(c)(2) to withdraw the above-identified application from issue after payment of the issue fee.

The petition is **GRANTED**.

The above-identified application is withdrawn from issue for consideration of a submission under 37 CFR 1.114 (request for continued examination). See 37 CFR 1.313(c)(2).

Petitioner is advised that the issue fee paid on December 22, 2004 in the above-identified application cannot be refunded. If, however, the above-identified application is again allowed, petitioner may request that it be applied towards the issue fee required by the new Notice of Allowance.[1]

Telephone inquiries should be directed to Wan Laymon at (571) 272-3220.

This matter is being referred to Technology Center AU 2873 for processing of the request for continued examination under 37 CFR 1.114 and for consideration of the concurrently filed Amendment.

Wan Laymon
Petitions Examiner
Office of Petitions
Office of the Deputy Commissioner
for Patent Examination Policy

---

[1] The request to apply the issue fee to the new Notice may be satisfied by completing and returning the new Issue Fee Transmittal Form PTOL-85(b), which includes the following language thereon: "Commissioner for Patents is requested to apply the Issue Fee and Publication Fee (if any) or re-apply any previously paid issue fee to the application identified above." Petitioner is advised that, whether a fee is indicated as being due or not, the Issue Fee Transmittal Form **must** be completed and timely submitted to avoid abandonment. Note the language in bold text on the first page of the Notice of Allowance and Fee(s) Due (PTOL-85).

UNITED STATES PATENT AND TRADEMARK OFFICE

UNITED STATES DEPARTMENT OF COMMERCE
United States Patent and Trademark Office
Address: COMMISSIONER FOR PATENTS
P.O. Box 1450
Alexandria, Virginia 22313-1450
www.uspto.gov

TOWNSEND AND TOWNSEND AND CREW, LLP
TWO EMBARCADERO CENTER
EIGHTH FLOOR
SAN FRANCISCO, CA 94111-3834

Mail Date: 04/23/2010

Applicant	: Tsuyoshi Oyaizu	: DECISION ON REQUEST FOR
Patent Number	: 7606993	: RECALCULATION of PATENT
Issue Date	: 10/20/2009	: TERM ADJUSTMENT IN VIEW
Appliction No	: 10/794,480	: OF WYETH AND NOTICE OF INTENT TO
Filed	: 03/04/2004	: ISSUE CERTIFICATE OF CORRECTION
		:

The Request for Recalculation is **GRANTED** to the extent indicated.

The patent term adjustment has been determined to be **116** days. The USPTO will *sua sponte* issue a certificate of correction reflecting the amount of PTA days determined by the recalculation.

Prior to the issuance of the certificate of correction, the USPTO will afford patentee an opportunity to be heard and request reconsideration. Accordingly, patentee has **one month or thirty (30) days**, whichever is longer, to file a request for reconsideration of this patent term adjustment calculation. See 35 U.S.C. 154(b)(3)(B)(ii) and 37 CFR 1.322(a)(4). No extensions of time will be granted under 37 CFR 1.136.

Patentee should use document code PET.OP if electronically filing a request for reconsideration of this patent term adjustment calculation. The patentee must also include the information required by 37 CFR 1.705(b)(2) and the fee required by 37 CFR 1.18(e). If patentee does not file a timely request for reconsideration of this patent term adjustment calculation including the information required by 37 CFR 1.705(b)(2) and the fee required by 37 CFR 1.18(e), the USPTO will issue a certificate of correction reflecting the PTA determination noted above.

Patentee should be aware that in order to preserve the right to review in the United States District Court for the District of Columbia of the USPTO patent term adjustment determination, patentee must ensure that he or she also take the steps required under 35 U.S.C. 154(b)(4)(A) in a timely manner. Nothing in the request for recalculation should be construed as providing an alternative time frame for commencing a civil action under 35 U.S.C. 154(b)(4)(A).

Any questions concerning this decision should be directed to the Office of Patent Legal Administration at 571-272-7702.

UNITED STATES PATENT AND TRADEMARK OFFICE

UNITED STATES DEPARTMENT OF COMMERCE
United States Patent and Trademark Office
Address: COMMISSIONER FOR PATENTS
P.O. Box 1450
Alexandria, Virginia 22313-1450
www.uspto.gov

King & Spalding LLP
P.O. Box 889
Belmont, CA 94002-0889

Mail Date: 04/21/2010

Applicant	: Thomas Graddis	: DECISION ON REQUEST FOR
Patent Number	: 7597894	: RECALCULATION of PATENT
Issue Date	: 10/06/2009	: TERM ADJUSTMENT IN VIEW
Appliction No	: 10/794,514	: OF WYETH AND NOTICE OF INTENT TO
Filed	: 03/05/2004	: ISSUE CERTIFICATE OF CORRECTION
		:

The Request for Recalculation is **GRANTED** to the extent indicated.

The patent term adjustment has been determined to be **1134** days. The USPTO will *sua sponte* issue a certificate of correction reflecting the amount of PTA days determined by the recalculation.

Prior to the issuance of the certificate of correction, the USPTO will afford patentee an opportunity to be heard and request reconsideration. Accordingly, patentee has **one month or thirty (30) days**, whichever is longer, to file a request for reconsideration of this patent term adjustment calculation. See 35 U.S.C. 154(b)(3)(B)(ii) and 37 CFR 1.322(a)(4). No extensions of time will be granted under 37 CFR 1.136.

Patentee should use document code PET.OP if electronically filing a request for reconsideration of this patent term adjustment calculation. The patentee must also include the information required by 37 CFR 1.705(b)(2) and the fee required by 37 CFR 1.18(e). If patentee does not file a timely request for reconsideration of this patent term adjustment calculation including the information required by 37 CFR 1.705(b)(2) and the fee required by 37 CFR 1.18(e), the USPTO will issue a certificate of correction reflecting the PTA determination noted above.

Patentee should be aware that in order to preserve the right to review in the United States District Court for the District of Columbia of the USPTO patent term adjustment determination, patentee must ensure that he or she also take the steps required under 35 U.S.C. 154(b)(4)(A) in a timely manner. Nothing in the request for recalculation should be construed as providing an alternative time frame for commencing a civil action under 35 U.S.C. 154(b)(4)(A).

Any questions concerning this decision should be directed to the Office of Patent Legal Administration at 571-272-7702.

UNITED STATES PATENT AND TRADEMARK OFFICE

Commissioner for Patents
United States Patent and Trademark Office
P.O. Box 1450
Alexandria, VA 22313-1450
www.uspto.gov

CONNOLLY BOVE LODGE & HUTZ LLP
THE NEMOURS BUILDING
1007 NORTH ORANGE STREET
P O BOX 2207
WILMINGTON, DE 19899

COPY MAILED

JUL 20 2005

OFFICE OF PETITIONS

In re Application of	:	
Paul Edward LeMay et al	:	
Application No. 10/794,558	:	DECISION GRANTING PETITION
Filed: March 5, 2004	:	UNDER 37 CFR 1.137(b)
Attorney Docket No. PARKER-1DIVII	:	

This is a decision on the petition under 37 CFR 1.137(b), filed April 28, 2005, to revive the above-identified application.

The petition is **GRANTED**.

This application became abandoned for failure to timely pay the issue and publication fees on or before February 22, 2005, as required by the Notice of Allowance and Fee(s) Due, mailed November 22, 2004.

The petition satisfies the conditions for revival pursuant to the provisions of 37 CFR 1.137(b) in that (1) the reply in the form payment of the issue fee of $1,400 and the publication fee of $300; (2) the petition fee of $1,500; and (3) the required statement of unintentional delay have been received. Accordingly, the issue and publication fees are accepted as having been unintentionally delayed.

Telephone inquiries concerning this decision should be directed to the undersigned at (571) 272-3218.

This matter is being referred to Publishing Division.

Frances Hicks
Petitions Examiner
Office of Petitions

UNITED STATES PATENT AND TRADEMARK OFFICE

Commissioner for Patents
United States Patent and Trademark Office
P.O. Box 1450
Alexandria, VA 22313-1450
www.uspto.gov

MBHB/TRADING TECHNOLOGIES
300 SOUTH WACKER DRIVE
SUITE 3200
CHICAGO IL 60606

MAILED

JUN 05 2009

OFFICE OF PETITIONS

In re Application of Brian Buck Application No. 10/794,559 Filed: March 5, 2004 Attorney Docket No. 04-169 Title: System and Method For Displaying a Constant Time Selection Context Menu Interface	DECISION ON REQUEST FOR RECONSIDERATION OF PATENT TERM ADJUSTMENT

This is in response to the "REQUEST FOR RECONSIDERATION OF PATENT TERM ADJUSTMENT UNDER 37 CFR §1.705 (b)-(d)" filed April 29, 2009. This petition is properly treated under 37 CFR §1.705(b). Applicants request that the determination of patent term adjustment be corrected from six hundred fifty-one (651) days to nine hundred sixteen (965) days. Applicant requests this correction on the basis that the Office will take in excess of three years to issue this patent and in light of the recent court decision in Wyeth v. Dudas, No. 07-1492 (D.D.C. September 30, 2008).

This application for patent term adjustment was filed with the submission of the Issue Fee. The instant application for patent term adjustment requests reconsideration of the patent term adjustment as it relates to the Office's failure to issue the patent within 3 years of the filing date. A decision is being **held in abeyance** until after the actual patent date. Knowledge of the actual date the patent issues is ordinarily required to calculate the amount, if any, of additional patent term patentee is entitled to for Office failure to issue the patent within 3 years. See § 1.703(b). It is noted that at the time of this decision, the patent has not issued.

Applicant is given **TWO (2) MONTHS** from the issue date of the patent to file a written request for reconsideration of the patent term adjustment for Office failure to issue the patent

within 3 years. A copy of this decision should accompany the request. Applicants may seek such consideration without payment of an additional fee. However, as to all other bases for seeking reconsideration of the patent term adjustment indicated in the patent, all requirements of § 1.705(d) must be met. Requests for reconsideration on other bases must be timely filed and must include payment of the required fee.

Rather than file the request for reconsideration of Patent Term Adjustment at the time of the mailing of the notice of allowance, applicants are advised that they may wait until the time of the issuance of the patent and file a request for reconsideration of the patent term pursuant to 37 CFR 1.705(d). The USPTO notes that it does not calculate the amount of time earned pursuant to 37 CFR 1.702(b) until the time of the issuance of the patent and accordingly, the Office will consider any request for reconsideration of the patent term adjustment due to an error in the calculation of 37 CFR 1.702(b) to be timely if the request for reconsideration is filed within two months of the issuance of the patent.

The Office acknowledges submission of the $200.00 fee set forth in 37 CFR 1.18(e). No additional fees are required.

The application file is being forwarded to the Office of Data Management for issuance of the patent. The patent term adjustment indicated on the patent (as shown on the Issue Notification mailed about three weeks prior to patent issuance) will include any additional adjustment accrued both for Office delay in issuing the patent more than four months after payment of the issue fee and satisfaction of all outstanding requirements, and for the Office taking in excess of three years to issue the patent (to the extent that the three-year period does not overlap with periods already accorded).

Telephone inquiries specific to this matter should be directed to Petitions Attorney Charlema Grant at (571) 272-3215.

Kery Fries

Kery Fries
Senior Legal Advisor Attorney
Office of Patent Legal Administration

UNITED STATES PATENT AND TRADEMARK OFFICE

Commissioner for Patents
United States Patent and Trademark Office
P.O. Box 1450
Alexandria, VA 22313-1450
www.uspto.gov

MBHB/TRADING TECHNOLOGIES
300 SOUTH WACKER DRIVE
SUITE 3200
CHICAGO IL 60606

COPY MAILED

SEP 29 2009

OFFICE OF PETITIONS

In re Patent No. 7,559,036	
Brian Buck	
Issue Date: July 7, 2009	
Application No. 10/794,559	DECISION ON REQUEST FOR
Filed: March 5, 2004	RECONSIDERATION OF
Attorney Dkt. No. 04-169	PATENT TERM ADJUSTMENT
Title: System and Method For	
Displaying A Constant Time	
Selection Context Menu	
Interface	

This is a decision on the "REQUEST FOR RECONSIDERATION OF PATENT TERM ADJUSTMENT UNDER 37 C.F.R. § 1.705 (b)-(d)," filed July 21, 2009, requesting that the patent term adjustment determination for the above-identified patent be changed from six hundred fifty-one (651) days to nine hundred sixty-five (965) days. This petition is properly treated under 37 CFR 1.705(d).

The request for reconsideration of patent term adjustment is **DISMISSED**.

On July 7, 2009, the above-identified application matured into US Patent No. 7,559,036 with a patent term adjustment of 651 days. This request for reconsideration of patent term adjustment was timely filed within two months of the issue date of the patent. See 37 C.F.R. § 1.705(d).

The Office acknowledges submission of the $200.00 fee set forth in 37 C.F.R. § 1.18(e). No additional fees are required.

Patentee asserts entitlement to a patent term adjustment of 965 days (741 + 386 reduced by 72 overlap - 90 (applicant delay)).

The Office agrees that an RCE was filed 3 years and 386 days after the filing date of this application. The Office agrees that certain actions were not taken within the specified time

frames, and thus, the entry of a period of adjustment of 741 days for Office delay is proper. At issue is whether Patentees should accrue 386 days of patent term adjustment for the Office taking in excess of three years to issue the patent (386 days less the 72 days of overlap), as well as 741 days for Office failure to take certain actions within a specified time frame (or examination delay).

The Office contends that the entire 386-day period overlaps. Patentee's calculation of the period of overlap is inconsistent with the Office's interpretation of this provision. 35 U.S.C. 154(b)(2)(A) limits the adjustment of patent term, as follows:

> to the extent that the periods of delay attributable to grounds specified in paragraph (1) overlap, the period of any adjustment granted under this subsection shall not exceed the actual number of days the issuance of the patent was delayed.

Likewise, 37 CFR 1.703(f) provides that:

> To the extent that periods of delay attributable to the grounds specified in §1.702 overlap, the period of adjustment granted under this section shall not exceed the actual number of days the issuance of the patent was delayed.

As explained in *Explanation of 37 CFR 1.703(f) and of the United States Patent and Trademark Office Interpretation of 35 U.S.C. 154(b)(2)(A)*, 69 Fed. Reg. 34283 (June 21, 2004), the Office interprets 35 U.S.C. 154(b)(2)(A) as permitting either patent term adjustment under 35 U.S.C. 154(b)(1)(A)(i)-(iv), or patent term adjustment under 35 U.S.C. 154(b)(1)(B), but not as permitting patent term adjustment under both 35 U.S.C. 154(b)(1)(A)(i)-(iv) and 154(b)(1)(B). Accordingly, the Office implements the overlap provision as follows:

> If an application is entitled to an adjustment under 35 U.S.C. 154(b)(1)(B), the entire period during which the application was pending (except for periods excluded under 35 U.S.C. 154(b)(1)(B)(i)-(iii)), and not just the period beginning three years after the actual filing date of the application, is the period of delay under 35 U.S.C. 154(b)(1)(B) in determining whether periods of delay overlap under 35 U.S.C. 154(b)(2)(A). Thus, any days of

> delay for Office issuance of the patent more than 3 years after the filing date of the application, which overlap with the days of patent term adjustment accorded prior to the issuance of the patent will not result in any additional patent term adjustment. See 35 U.S.C. 154(b)(1)(B), 35 U.S.C. 154(b)(2)(A), and 37 CFR § 1.703(f). See *Changes to Implement Patent Term Adjustment Under Twenty Year Term; Final Rule*, 65 Fed. Reg. 56366 (Sept. 18, 2000). See also *Revision of Patent Term Extension and Patent Term Adjustment Provisions; Final Rule*, 69 Fed. Reg. 21704 (April 22, 2004), 1282 Off. Gaz. Pat. Office 100 (May 18, 2004). See also *Explanation of 37 CFR 1.703(f) and of the United States Patent and Trademark Office Interpretation of 35 U.S.C. 154(b)(2)(A)*, 69 Fed. Reg. 34283 (June 21, 2004).

As such, the period for over 3 year pendency does not overlap only to the extent that the actual dates in the period beginning three years after the date on which the application was filed overlap with the actual dates in the periods for failure of the Office to take action within specified time frames. In other words, consideration of the overlap does not begin three years after the filing date of the application.

In this instance, the relevant period under 35 U.S.C. 154(b)(1)(B) in determining whether periods of delay "overlap" under 35 U.S.C. 154(b)(2)(A) is the entire period during which the application was pending before the Office, March 5, 2004 to March 25, 2008 (the date on which the RCE was filed). 741 days of patent term adjustment were accorded prior to the filing of the RCE for the Office failing to respond within specified time frames during the pendency of the application. All of the 386 days for Office delay in issuing the patent overlap with the 741 days of Office delay.

The 386 days attributed to the delay in the issuance of the patent overlaps with the adjustment of 741 days attributable to the grounds specified in 37 C.F.R. § 1.702(a)(1). Accordingly, at issuance, the Office properly entered no additional days of patent term adjustment for the Office taking in excess of 3 years to issue the patent.

In view thereof, no adjustment to the patent term will be made.

Telephone inquiries specific to this matter should be directed to Charlema Grant, Petitions Attorney, at (571) 272-3215.

Olesia Brown f/

Anthony Knight
Supervisor
Office of Petitions

UNITED STATES PATENT AND TRADEMARK OFFICE

Commissioner for Patents
United States Patent and Trademark Office
P.O. Box 1450
Alexandria, VA 22313-1450
www.uspto.gov

DICKSTEIN SHAPIRO LLP
1177 AVENUE OF THE AMERICAS 6TH AVENUE
NEW YORK NY 10036-2714

COPY MAILED
DEC 0 5 2006
OFFICE OF PETITIONS

In re Application of	:	
Gubther Schindler	:	
Application No.: 10/794,588	:	DECISION ON
Filing or 371(c) Date: 03/05/2004	:	PETITION
Title of Invention:	:	
MONOLITHIC INTEGRATED	:	
CIRCUIT ARRANGEMENT	:	

This is a decision in response to the Petition to Withdraw Holding of Abandonment based on Failure to Receive Notice of Allowance and Issue Fee Due, filed September 1, 2006. The petition is properly treated under 37 CFR 1.181. The delay in treating this petition is regretted.

This Petition is hereby **dismissed**.

Any further petition must be submitted within TWO (2) MONTHS from the mail date of this decision. Extensions of time under 37 CFR 1.136(a) are permitted. The reconsideration request should include a cover letter entitled "Renewed Petition under [insert the applicable code section]." This is **not** final agency action within the meaning of 5 U.S.C. § 704.

The above-identified application became abandoned for failure to timely and properly reply to the Notice of Allowance and Issue Fee Due ("Notice"), mailed April 20, 2006. The Notice set a three (3) month period for reply. Extensions of time were available under 37 CFR 1.136(a). No reply having been received, the application became abandoned on July 21, 2006. A Notice of Abandonment was mailed August 23, 2006.

Petition under 37 CFR 1.181

Applicant files the instant petition and asserts that the Notice was never received at the law firm of Dickstein Shapiro LLP. Applicant states that the Notice was mailed to the office of Darby & Darby, P.C. (Darby). Applicant states that it requested a transfer of its files to the New York office of Dickstein Shapiro on March 13, 2006. Applicant does not state to whom this transfer request was made, however, Applicant states that a change of correspondence address and revocation of power of attorney and new power of attorney were filed on April 28, 2006, 8 days after the Notice was mailed.

Applicant provides statements from employees of and copies of docket records from Dickstein Shapiro, attesting to the assertion that the Notice was not received at Dickstein Shapiro.

Applicable Law, Rules and MPEP

The MPEP 711.03(c)A, Petition To Withdraw Holding of Abandonment Based on Failure To Receive Office Action, provides

> In Delgar v. Schulyer, 172 USPQ 513 (D.D.C. 1971), the court decided that the Office should mail a new Notice of Allowance in view of the evidence presented in support of the contention that the applicant's representative did not receive the original Notice of Allowance. Under the reasoning of Delgar, an allegation that an Office action was never received may be considered in a petition to withdraw the holding of abandonment. If adequately supported, the Office may grant the petition to withdraw the holding of abandonment and remail the Office action. That is, the reasoning of Delgar is applicable regardless of whether an application is held abandoned for failure to timely pay the issue fee (35 U.S.C. 151) or for failure to prosecute (35 U.S.C. 133). To minimize costs and burdens to practitioners and the Office, the Office has modified the showing required to establish nonreceipt of an Office action. The showing required to establish nonreceipt of an Office communication must include a statement from the practitioner stating that the Office communication was not received by the practitioner and attesting to the fact that a search of the file jacket and docket records indicates that the Office communication was not received. A copy of the docket record where the nonreceived Office communication would have been entered had it been received and docketed must be attached to and referenced in practitioner's statement. For example, if a three month period for reply was set in the nonreceived Office action, a copy of the docket report showing all replies docketed for a date three months from the mail date of the nonreceived Office action must be submitted as documentary proof of nonreceipt of the Office action. The showing outlined above may not be sufficient if there are circumstances that point to a conclusion that the Office action may have been lost after receipt rather than a conclusion that the Office action was lost in the mail (e.g., if the practitioner has a history of not receiving Office actions). (Emphasis supplied)

MPEP 711.03(c)

Analysis

A review of the petition reveals that the correspondence address in the petition differs from the correspondence address of record at the time the Notice was mailed. Also, Applicants admit that the correspondence address and power of attorney changes were not filed with this Office until after the Notice was mailed. Applicant has not filed any statements, copies of docket records or declarations from anyone at Darby asserting that the Notice was not received.

Correspondence properly addressed and mailed is presumed to have been delivered by the United States Post Office at the correspondence address of record. Applicant has failed to overcome this presumption. Evidence presented suggest circumstances that point to a conclusion that the Office action may have been lost after receipt rather than a conclusion that the Office action was lost in the mail. Accordingly, the petition is dismissed.

Alternative venue

Applicant is strongly urged to file a petition stating that the delay was unintentional. An "unintentional" petition under 37 CFR 1.137(b) must be accompanied by the required fee, currently $1,500.00 (reduced by half for a small entity).

The filing of a petition under 37 CFR 1.137(b) cannot be intentionally delayed and therefore must be filed promptly. A person seeking revival due to unintentional delay can not make a statement that the delay was unintentional unless the entire delay, including the delay from the date it was discovered that the application was abandoned until the filing of the petition to revive under 37 CFR 1.137(b), was unintentional. A statement that the delay was unintentional is not appropriate if petitioner intentionally delayed the filing of a petition for revive under 37 CFR 1.137(b).

Further correspondence with respect to this matter should be addressed as follows:

By mail: Commissioner for Patents
PO Box 1450
Alexandria, VA 22313-1450

By FAX: (571) 273-8300
Attn: Office of Petitions

By hand: Customer Service Window
Randolph Building
401 Dulany Street
Alexandria, VA 22314

Telephone inquiries concerning this matter should be directed to the undersigned at (571) 272-3232.

Derek L. Woods
Attorney
Office of Petitions

UNITED STATES PATENT AND TRADEMARK OFFICE

Commissioner for Patents
United States Patent and Trademark Office
P.O. Box 1450
Alexandria, VA 22313-1450
www.uspto.gov

DICKSTEIN SHAPIRO LLP
1177 AVENUE OF THE AMERICAS 6TH AVENUE
NEW YORK NY 10036-2714

COPY MAILED

MAR 2 6 2007

OFFICE OF PETITIONS

In re Application of Gubther Schindler Application No.: 10/794,588 Filing or 371(c) Date: 03/05/2004 Title of Invention: MONOLITHIC INTEGRATED CIRCUIT ARRANGEMENT	: : : : : : :	DECISION ON PETITION

This is a decision in response to the Petition to Withdraw Holding of Abandonment based on Failure to Receive Notice of Allowance and Issue Fee Due, filed September 1, 2006. The petition is properly treated under 37 CFR 1.181. The delay in treating this petition is regretted.

This Petition is hereby **granted**.

The above-identified application became abandoned for failure to timely and properly reply to the Notice of Allowance and Issue Fee Due ("Notice"), mailed April 20, 2006. The Notice set a three (3) month period for reply. Extensions of time were available under 37 CFR 1.136(a). No reply having been received, the application became abandoned on July 21, 2006. A Notice of Abandonment was mailed August 23, 2006.

Applicant files the present petition to revive the application. The issue and publication fees were filed September 1, 2006.

This application is being referred to Publishing Division for processing into a patent.

Telephone inquiries concerning this decision should be directed to the undersigned at (571) 272-3232.

Derek L. Woods
Attorney
Office of Petitions

UNITED STATES PATENT AND TRADEMARK OFFICE

Commissioner for Patents
United States Patent and Trademark Office
P.O. Box 1450
Alexandria, VA 22313-1450
www.uspto.gov

ALSTON & BIRD LLP
BANK OF AMERICA PLAZA
101 SOUTH TRYON STREET, SUITE 4000
CHARLOTTE NC 28280-4000

COPY MAILED
DEC 3 1 2007
OFFICE OF PETITIONS

In re Application of :
Dickey et al. :
Application No. 10/794,615 :
Filed: March 5, 2004 :
Attorney Docket No. 040989/274137 :

NOTICE

This is a notice regarding your request for acceptance of a fee deficiency submission under 37 CFR 1.28.

The Office no longer investigates or rejects original or reissue applications under 37 CFR 1.56. **1098 Off. Gaz. Pat. Office 502 (January 3, 1989).** Therefore, nothing in this Notice is intended to imply that an investigation was done.

Your fee deficiency submission under 37 CFR 1.28 is hereby **ACCEPTED**.

This application is no longer entitled to small entity status. Accordingly, all future fees paid in this application must be paid at the large entity rate.

This application is being referred to Art Unit 1638 for further processing.

Inquiries related to this communication should be directed to the undersigned at (571) 272-3215.

Charlema Grant

Charlema Grant
Petitions Attorney
Office of Petitions

UNITED STATES PATENT AND TRADEMARK OFFICE

UNITED STATES DEPARTMENT OF COMMERCE
United States Patent and Trademark Office
Address: COMMISSIONER FOR PATENTS
P.O. Box 1450
Alexandria, Virginia 22313-1450
www.uspto.gov

ALSTON & BIRD LLP
BANK OF AMERICA PLAZA
101 SOUTH TRYON STREET, SUITE 4000
CHARLOTTE, NC 28280-4000

Mail Date: 04/21/2010

Applicant	: Lynn F. Dickey	: DECISION ON REQUEST FOR
Patent Number	: 7632983	: RECALCULATION of PATENT
Issue Date	: 12/15/2009	: TERM ADJUSTMENT IN VIEW
Appliction No	: 10/794,615	: OF WYETH AND NOTICE OF INTENT TO
Filed	: 03/05/2004	: ISSUE CERTIFICATE OF CORRECTION
		:

The Request for Recalculation is **GRANTED** to the extent indicated.

The patent term adjustment has been determined to be **363** days. The USPTO will *sua sponte* issue a certificate of correction reflecting the amount of PTA days determined by the recalculation.

Prior to the issuance of the certificate of correction, the USPTO will afford patentee an opportunity to be heard and request reconsideration. Accordingly, patentee has **one month or thirty (30) days**, whichever is longer, to file a request for reconsideration of this patent term adjustment calculation. See 35 U.S.C. 154(b)(3)(B)(ii) and 37 CFR 1.322(a)(4). No extensions of time will be granted under 37 CFR 1.136.

Patentee should use document code PET.OP if electronically filing a request for reconsideration of this patent term adjustment calculation. The patentee must also include the information required by 37 CFR 1.705(b)(2) and the fee required by 37 CFR 1.18(e). If patentee does not file a timely request for reconsideration of this patent term adjustment calculation including the information required by 37 CFR 1.705(b)(2) and the fee required by 37 CFR 1.18(e), the USPTO will issue a certificate of correction reflecting the PTA determination noted above.

Patentee should be aware that in order to preserve the right to review in the United States District Court for the District of Columbia of the USPTO patent term adjustment determination, patentee must ensure that he or she also take the steps required under 35 U.S.C. 154(b)(4)(A) in a timely manner. Nothing in the request for recalculation should be construed as providing an alternative time frame for commencing a civil action under 35 U.S.C. 154(b)(4)(A).

Any questions concerning this decision should be directed to the Office of Patent Legal Administration at 571-272-7702.

UNITED STATES PATENT AND TRADEMARK OFFICE

UNITED STATES DEPARTMENT OF COMMERCE
United States Patent and Trademark Office
Address: COMMISSIONER FOR PATENTS
P.O. Box 1450
Alexandria, Virginia 22313-1450
www.uspto.gov

ALSTON & BIRD LLP
BANK OF AMERICA PLAZA
101 SOUTH TRYON STREET, SUITE 4000
CHARLOTTE, NC 28280-4000

Mail Date: 05/18/2010

Applicant : Lynn F. Dickey
Patent Number : 7632983
Issue Date : 12/15/2009
Application No : 10/794,615
Filed : 03/05/2004

: NOTICE CONCERNING IMPROPER
: CALCULATION OF PATENT TERM
: ADJUSTMENT BASED UPON USPTO
: IMPROPERLY MEASURING REDUCTION
: PERIOD UNDER 37 CFR 1.704(c)(10).

The United States Patent and Trademark Office (USPTO) discovered that in processing the recent recalculation decisions mailed in response to patentee's filed Request for Recalculation of Patent Term Adjustment in view of Wyeth, the USPTO improperly measured the reduction period for reductions under 37 CFR 1.704(c)(10). Pursuant to 37 CFR 1.704(c)(10), patentee's reduction begins on the date of filing the amendment under 37 CFR 1.312 ("1.312 amendment") or other related paper and ends on the date that the Office mails a response to the filing of the 1.312 amendment or other paper. It has been discovered that during the recalculation, the calculation failed to the limit the reduction to the mail date of the response to the 1.312 amendment or other paper. Accordingly, patentee's reductions were greater than warranted.

This notice **VACATES** the previous GRANTED request for recalculation and provides patentee with a revised GRANTED recalculation.

The patent term adjustment has been determined to be **423** days. The USPTO will *sua sponte* issue a certificate of correction reflecting the amount of patent term adjustment (PTA) days determined by the recalculation.

Prior to the issuance of the certificate of correction, the USPTO will afford patentee an opportunity to be heard and request reconsideration. Accordingly, patentee has **one month or thirty (30) days** from the mail date of this notice, whichever is longer, to file a request for reconsideration of this PTA calculation. See 35 U.S.C. § 154(b)(3)(B)(ii) and 37 CFR 1.322(a)(4).

Patentee should use document code PET.OP if electronically filing a request for reconsideration of this PTA calculation. The patentee must also include the information required by 37 CFR 1.705(b)(2), and the fee required by 37 CFR 1.18(e). If patentee does not file a timely request for reconsideration of this PTA calculation, including the information required by 37 CFR 1.705(b)(2) and the fee required by 37 CFR 1.18(e), the USPTO will issue a certificate of correction reflecting the PTA determination noted above.

Patentee should be aware that in order to preserve the right of review of the USPTO's PTA determination in the United States District Court for the District of Columbia, patentee must ensure that the steps required under 35 U.S.C. § 154 (b)(4) are taken in a timely manner. Nothing in the request for recalculation should be construed as providing an alternative time frame for commencing a civil action under 35 U.S.C. § 154(b)(4).

UNITED STATES PATENT AND TRADEMARK OFFICE

COMMISSIONER FOR PATENTS
UNITED STATES PATENT AND TRADEMARK OFFICE
P.O. BOX 1450
ALEXANDRIA, VA 22313-1450
www.uspto.gov

FRANK C. PRICE
13812 SAND-HURST PL
SANTA ANA, CA 92705

COPY MAILED

AUG 1 5 2005

OFFICE OF PETITIONS

In re Application of :
Roy A. Haggard, et al. :
Application No. 10/794,626 : ON PETITION
Filed: March 8, 2004 :
Attorney Docket No. None :

This is a decision on the petition under 37 CFR 1.137(b), filed April 1, 2005, to revive the above-identified application.

The petition is **DISMISSED**.

A grantable petition under 37 CFR 1.137(b) must be accompanied by: (1) the required reply, unless previously filed; (2) the petition fee as set forth in 37 CFR 1.17(m); (3) a statement that the entire delay in filing the required reply from the due date for the reply until the filing of a grantable petition pursuant to 37 CFR 1.137(b) was unintentional; and (4) any terminal disclaimer (and fee as set forth in 37 CFR 1.20(d)) required by 37 CFR 1.137(c). Where there is a question as to whether either the abandonment or the delay in filing a petition under 37 CFR 1.137 was unintentional, the Commissioner may require additional information. See MPEP 711.03(c)(III)(C) and (D).

The instant petition lacks item 1. In an application or patent, abandoned or lapsed for failure to pay the issue fee or any portion thereof, the required reply must be the payment of the issue fee or any outstanding balance thereof.

Effective December 8, 2004, the issue fee for a small entity was increased to $700. It is noted that petitioner submitted $985 for an issue fee payment of $685 and a $300 publication fee on April 1, 2005. Since the issue fee is being paid after December 8, 2004, the issue fee paid is deficient by $15. The application cannot be revived until the requisite issue fee is paid.

Any request for reconsideration of this decision must be submitted within TWO (2) MONTHS from the mail date of this decision. Extensions of time under 37 CFR 1.136(a) are permitted. The reconsideration request should include the issue fee deficiency and a cover letter entitled "Renewed Petition under 37 CFR 1.137(b)." This is **not** final agency action within the meaning of 5 U.S.C. § 704.

Further correspondence with respect to this matter should be addressed as follows:

By mail: Mail Stop PETITION
Commissioner for Patents
Post Office Box 1450
Alexandria, VA 22313-1450

By hand: U.S. Patent and Trademark Office
Customer Service Window, Mail Stop PETITION
Randolph Building
401 Dulany Street
Alexandria, VA 22314

The centralized facsimile number is **(571) 273-8300**.

Any questions concerning this matter may be directed to the undersigned at (571) 272-3204.

Sherry D. Brinkley
Petitions Examiner
Office of Petitions
Office of the Deputy Commissioner
for Patent Examination Policy

UNITED STATES PATENT AND TRADEMARK OFFICE

COMMISSIONER FOR PATENTS
UNITED STATES PATENT AND TRADEMARK OFFICE
P.O. BOX 1450
ALEXANDRIA, VA 22313-1450
www.uspto.gov

FRANK C. PRICE
13812 SAND-HURST PL
SANTA ANA, CA 92705

COPY MAILED

DEC 0 2 2005

OFFICE OF PETITIONS

ON PETITION

In re Application of :
Roy A. Haggard, et al. :
Application No. 10/794,626 :
Filed: March 8, 2004 :
Attorney Docket No. None :

This is a decision on the renewed petition under 37 CFR 1.137(b), filed August 25, 2005, to revive the above-identified application.

The petition, as supplemented, is found to be in compliance with the requirements of 37 CFR 1.137(b). Accordingly, the petition is **GRANTED**.

The application file is being forwarded to the Office of Publications for further processing.

Telephone inquiries concerning this decision should be directed to the undersigned at (571) 272-3204. Telephone inquiries related to processing at Publishing Division should be directed to (703) 305-8283.

Sherry D. Brinkley
Petitions Examiner
Office of Petitions
Office of the Deputy Commissioner
for Patent Examination Policy

UNITED STATES PATENT AND TRADEMARK OFFICE

Commissioner for Patents
United States Patent and Trademark Office
P.O. Box 1450
Alexandria, VA 22313-1450
www.uspto.gov

MAILED

JUL 17 2009

OFFICE OF PETITIONS

JONATHAN BICK
WOLF BLOCK
101 EISENHOWER PARKWAY
ROSELAND NJ 07068

In re Application of	:	
Roland Yalon	:	
Application No. 10/794,629	:	ON PETITION
Filed: March 5, 2004	:	
Attorney Docket No. YAL003217862	:	

This is a decision on the petition to revive under 37 CFR 1.137(b), filed May 15, 2009.

The petition under 37 CFR 1.137(b) is **GRANTED**.

The above-identified application became abandoned for failure to timely file a reply in response to the Notice of Non-Compliant Amendment mailed June 2, 2008. This Notice set an extendable period for reply of one (1) month. No reply having been received, the application became abandoned on July 3, 2008. A Notice of Abandonment was mailed on January 13, 2009.

With the instant petition, applicant made the proper statement of unintentional delay, paid the petition fee, and submitted the required reply in the form of an Amendment.

The application is being forwarded to Group Art Unit 3781 for consideration of the Amendment, filed May 15, 2009.

Telephone inquiries related to this decision should be directed to the undersigned at (571)272-3207.

Cliff Congo
Petitions Attorney
Office of Petitions

UNITED STATES PATENT AND TRADEMARK OFFICE

Commissioner for Patents
United States Patent and Trademark Office
P.O. Box 1450
Alexandria, VA 22313-1450
www.uspto.gov

COPY MAILED

DEC 17 2009

OFFICE OF PETITIONS

JONATHAN BICK
WOLF BLOCK
101 EISENHOWER PARKWAY
ROSELAND NJ 07068

In re Application of	:	
Roland YALON	:	
Application No. 10/794,629	:	DECISION ON PETITION
Filed: March 5, 2004	:	TO WITHDRAW
Attorney Docket No. YAL003217862	:	FROM RECORD
	:	

This is a decision on the Request to Withdraw as attorney or agent under 37 C.F.R. § 1.36(b) filed October 5, 2009.

The request is **NOT APPROVED**.

The Office will no longer approve requests from practitioners to withdraw from applications where the requesting practitioner is acting, or has acted, in a representative capacity pursuant to 37 CFR 1.34. In these situations, the practitioner is responsible for the correspondence the practitioner files in the application while acting in a representative capacity. As such, there is no need for the practitioner to obtain the Office's permission to withdraw from representation. However, practitioners acting in a representative capacity, like practitioners who have a power of attorney in the application, remain responsible for noncompliance with 37 CFR 1.56, as well as 37 CFR 10.18, with respect to documents they file.

A review of the file record indicates that Nicholas J. DuBois does not have power of attorney in this patent application. See 37 C.F.R. § 10.40. Accordingly, the request to withdraw under 37 C.F.R. § 1.36(b) is not applicable.

All future communications from the Office will continue to be directed to the above-identified address until otherwise properly notified.

Telephone inquires concerning this decision should be directed to the undersigned at 571-272-6735.

/Diane Goodwyn/
Diane Goodwyn
Petitions Examiner
Office of Petitions

cc: NICHOLAS J. DUBOIS
PO BOX 1180
MCAFEE, NJ 07428

UNITED STATES PATENT AND TRADEMARK OFFICE

Commissioner for Patents
United States Patent and Trademark Office
P.O. Box 1450
Alexandria, VA 22313-1450
www.uspto.gov

Robert E. Howard
P. O. Box 10345
Eugene OR 97440

COPY MAILED

DEC 15 2009

OFFICE OF PETITIONS

In re Patent No. 6,935,069 :
Issue Date: August 30, 2005 :
Application No. 10/794,645 :
Filed: March 5, 2004 :
Attorney Docket No. :

ON PETITION

This is a decision on the petition under 37 CFR 1.378(c), filed October 26, 2009, to accept the unintentionally delayed payment of a maintenance fee for the above-identified patent.

The petition is **GRANTED**.

This patent expired at midnight August 30, 2009, for failure to pay the 3½ year maintenance fee. Since this petition was submitted within twenty-four months after the six-month grace period provided in 37 CFR 1.362(e), the petition was timely filed under the provisions of 37 CFR 1.378(c).

The maintenance fee is hereby accepted and the above-identified patent is reinstated as of the mail date of this decision.

Since the maintenance fee was paid outside the six month window period, the $65 surcharge fee submitted with the petition on October 2, 2009, is unnecessary and petitioner may request a refund of this fee by writing to the following address: Mail Stop 16, Commissioner for Patents, P. O. Box 1450, Alexandria, VA 22313-1450. A copy of this decision should accompany petitioner's request.

Telephone inquiries concerning this decision should be directed to JoAnne Burke at (571) 272-4584.

JoAnne Burke
Petitions Examiner
Office of Petitions

UNITED STATES PATENT AND TRADEMARK OFFICE

Commissioner for Patents
United States Patent and Trademark Office
P.O. Box 1450
Alexandria, VA 22313-1450
www.uspto.gov

PHILIP S. JOHNSON
JOHNSON & JOHNSON
ONE JOHNSON & JOHNSON PLAZA
NEW BRUNSWICK, NJ 08933-7003

MAILED

MAR 03 2009

OFFICE OF PETITIONS

In re Application of
Hai Yong **HUANG, et al.**
Application No. 10/794,660
Filed: March 5, 2004
Attorney Docket No. **MCP-5031**

DECISION ON PETITION
UNDER 37 CFR 1.137(b)

This is a decision on the petition under 37 CFR 1.137(b), filed July 31, 2008, to revive the above-identified application.

The petition is **GRANTED**.

The application became abandoned for failure to reply in a timely manner to the non-final Office action mailed, December 13, 2007, which set a shortened statutory period for reply of three (3) months. No extensions of time under the provisions of 37 CFR 1.136(a) were obtained. Accordingly, the application became abandoned on March 14, 2008.

The petition is not accompanied by a statement of express abandonment in favor of the filing of a continuing application. In order to facilitate action, the petition to revive should include reference to the filing of a continuing application and a letter of express abandonment, conditional upon the granting of the petition and of a filing date to the continuing application. Nevertheless, in view of the statement that the reply is the filing of a continuing application, the statement will be construed as a request to expressly abandon this application in favor of the continuing application. If this was not the intent of applicant, the Office should be promptly notified.

The petition satisfies the requirements of 37 CFR 1.137(b) in that petitioner has supplied (1) the reply in the form of a continuing application under 37 CFR 1.53(b); (2) the petition fee of $1540; and (3) an adequate statement of unintentional delay.

This application is being revived solely for purposes of continuity. As continuity has been established by this decision, the application is again abandoned in favor of continuing application 12/061,765 filed April 3, 2008.

Telephone inquiries concerning this decision should be directed to Monica A. Graves at (571) 272-7253.

Brian W. Brown
Petitions Examiner
Office of Petitions

UNITED STATES PATENT AND TRADEMARK OFFICE

Commissioner for Patents
United States Patent and Trademark Office
P.O. Box 1450
Alexandria, VA 22313-1450
www.uspto.gov

AARON L. PATTON
4401 ATLANTIC AVENUE
SUITE 200
LONG BEACH CA 90807

COPY MAILED

JUL 07 2008

OFFICE OF PETITIONS

In re Application of	:	
Khalil Ibrahim Nino	:	
Application No. 10/794,664	:	DECISION GRANTING PETITION
Filed: March 5, 2004	:	UNDER 37 CFR 1.313(c)(2)
Attorney Docket No. NINO-001	:	

This is a decision on the petition under 37 CFR 1.313(c)(2), filed July 5, 2008, to withdraw the above-identified application from issue after payment of the issue fee.

The petition is **GRANTED**.

The above-identified application is withdrawn from issue for consideration of a submission under 37 CFR 1.114 (request for continued examination). *See* 37 CFR 1.313(c)(2).

Petitioner is advised that the issue fee paid on May 22, 2008 cannot be refunded. If, however, this application is again allowed, petitioner may request that it be applied towards the issue fee required by the new Notice of Allowance.[1]

Telephone inquiries should be directed to the undersigned at (571) 272-3208.

This application is being referred to Technology Center AU 1797 for processing of the request for continued examination under 37 CFR 1.114 and for consideration of the concurrently filed IDS.

Karen Creasy
Petitions Examiner
Office of Petitions

[1] *The request to apply the issue fee to the new Notice may be satisfied by completing and returning the new Part B – Fee(s) Transmittal Form (along with any balance due at the time of submission). Petitioner is advised that the Issue Fee Transmittal Form* ***must*** *be completed and timely submitted to avoid abandonment of the application.*

UNITED STATES PATENT AND TRADEMARK OFFICE

Commissioner for Patents
United States Patent and Trademark Office
P.O. Box 1450
Alexandria, VA 22313-1450
www.uspto.gov

FAEGRE & BENSON LLP
PATENT DOCKETING
2200 WELLS FARGO CENTER
90 SOUTH SEVENTH STREET
MINNEAPOLIS MN 55402-3901

COPY MAILED

FEB 29 2008

OFFICE OF PETITIONS

In re Application of	:	
Jeffry S. Bennin et al	:	
Application No. 10/794,681	:	DECISION GRANTING PETITION
Filed: March 5, 2004	:	UNDER 37 CFR 1.313(c)(2)
Attorney Docket No. 17310-296453	:	

This is a decision on the petition under 37 CFR 1.313(c)(2), filed February 29, 2008, to withdraw the above-identified application from issue after payment of the issue fee.

The petition is **GRANTED**.

The above-identified application is withdrawn from issue for consideration of a submission under 37 CFR 1.114 (request for continued examination). *See* 37 CFR 1.313(c)(2).

Petitioner is advised that the issue fee paid on January 9, 2008 cannot be refunded. If, however, this application is again allowed, petitioner may request that it be applied towards the issue fee required by the new Notice of Allowance.[1]

Telephone inquiries should be directed to the undersigned at (571) 272-3208.

This application is being referred to Technology Center AU 3729 for processing of the request for continued examination under 37 CFR 1.114 and for consideration of the concurrently filed February 29, 2008.

Karen Creasy
Petitions Examiner
Office of Petitions

---

[1] *The request to apply the issue fee to the new Notice may be satisfied by completing and returning the new Part B – Fee(s) Transmittal Form (along with any balance due at the time of submission). Petitioner is advised that the Issue Fee Transmittal Form must be completed and timely submitted to avoid abandonment of the application.*

UNITED STATES PATENT AND TRADEMARK OFFICE

Commissioner for Patents
United States Patent and Trademark Office
P.O. Box 1450
Alexandria, VA 22313-1450
www.uspto.gov

INTELLECTUAL PROPERTY / TECHNOLOGY LAW
PO BOX 14329
RESEARCH TRIANGLE PARK NC 27709

COPY MAILED

JUL 11 2006

OFFICE OF PETITIONS

In re Application of	:	
Eshraghi et al.	:	DECISION ON PETITION
Application No. 10/794,687	:	TO MAKE SPECIAL
Filed: March 5, 2004	:	37 CFR1.102(D)
Attorney Docket No. 4172-123	:	

This is a decision on the petition under 37 CFR 1.102(c) (2)(ii), filed June 7, 2006, to make the above-identified application special based on the invention materially contributing to the development or conservation of energy resources as set forth in M.P.E.P. § 708.02, Section VI.

The petition is **DISMISSED**.

A grantable petition to make an application special under 37 CFR 1.102(c)(ii) and MPEP § 708.02, Section VI: Energy, must state how the invention materially contributes to (A) the discovery or development of energy resources, or (b) the more efficient utilization and conservation of energy resources. If the disclosure is not clear on its face that the claimed invention materially contributes category (A) or (B), the petition must be accompanied by a statement by the applicant, assignee, or an attorney/agent registered to practice before the Office explaining how the materiality standard is met. Examples of inventions in category (A) would be developments in fossil fuels (natural gas, coal, and petroleum), hydrogen fuel technologies, nuclear energy, solar energy, etc. Category (B) would include inventions relating to the reduction of energy consumption in combustion systems, industrial equipment, household appliances, etc. No fee is required.

The petition states, "The electrochemical cells of the invention include fuel cell embodiments having the potential to achieve practical implementation as power supplies in automotive/vehicular and other (e.g., home, consumer products, industrial, emergency management, etc.) applications." The statement lacks any specifics about how the invention materially contributes to item (B), above. Without specific details about how the invention functions, the above statements are inadequate to establish for the record that the invention "materially contributes to the more efficient utilization and conservation of energy resources." The contribution of petitioner's invention does not rise to the level intended by the Rule.

Further, the materially standard does not permit an applicant to speculate as to how an invention could hypothetically be more efficient and conserve more energy resources.

Further correspondence with respect to this matter should be addressed as follows:

By Mail: Mail Stop PETITION
Commissioner for Patents
P. O. Box 1450
Alexandria, VA 22313-1450

By hand: U. S. Patent and Trademark Office
Customer Service Window, Mail Stop Petitions
Randolph Building
401 Dulany Street
Alexandria, VA 22314

By FAX: (571) 273-8300

Telephone inquiries concerning this decision should be directed to Petitions Examiner Liana Chase at 571-272-3206. All other inquiries concerning either the examination or status of the application should be directed to the Technology Center.

This matter is being referredto Technology Center Art Unit 1745 for action in its regular turn.

David Bucci
Petitions Examiner
Office of Petitions

UNITED STATES PATENT AND TRADEMARK OFFICE

COMMISSIONER FOR PATENTS
UNITED STATES PATENT AND TRADEMARK OFFICE
P.O. BOX 1450
ALEXANDRIA, VA 22313-1450
www.uspto.gov

BUCHANAN INGERSOLL PC
(INCLUDING BURNS, DOANE, SWECKER & MATHIS)
POST OFFICE BOX 1404
ALEXANDRIA, VA 22313-1404

COPY MAILED

AUG 23 2005

OFFICE OF PETITIONS

In re Application of:	:	
Dellmark et al.	:	
Application No. 10/794,688	:	DECISION NOTING
Filed: March 5, 2004	:	JOINDER OF
Title of Invention:	:	INVENTOR
DYNAMIC SECURITY MODEL	:	

This is in response to the Petition Under 37 CFR 1.47(a), filed December 23, 2005, and the Request for Withdrawal Petition[1], filed July 22, 2005, noting the joinder of the inventor.

In view of the joinder of the inventor, further consideration under 37 CFR 1.47(a) is not necessary and the Reconsideration of Petition is considered to be moot. This application does not have any Rule 1.47(a) status and no such status should appear on the file wrapper. This application need not be returned to this Office for further consideration under 37 CFR 1.47(a).

The Declaration has been entered and made of record.

This application is being returned to the Office of Initial Patent Examination for further processing.

Telephone inquiries related to this decision may be directed to the undersigned at (571) 272-3232.

Derek L. Woods
Petitions Attorney
Office of Petitions

[1] Withdrawal of the petition results in the abandonment of the application, since the petition was filed in response to a Notice to File Missing Parts of Nonprovisional Application, mailed May 25, 2004. As such, the Request to withdraw the petition is being treated as a supplement to the petition noting joinder of the inventor.

UNITED STATES PATENT AND TRADEMARK OFFICE

Commissioner for Patents
United States Patent and Trademark Office
P.O. Box 1450
Alexandria, VA 22313-1450
www.uspto.gov

COPY MAILED

MAR 1 0 2006

OFFICE OF PETITIONS

TRASK BRITT
P.O. BOX 2550
SALT LAKE CITY, UT 84110

In re Application of :
Jerry D. McBride :
Application No. 10/794,696 : ON PETITION
Filed: March 5, 2004 :
Attorney Docket No. 2269-4299.1US (99-0876.01

This is a decision on the petition filed, March 2, 2006 under 37 CFR 1.313(c)(2) to withdraw the above-identified application from issue after payment of the issue fee.

The petition is **GRANTED**.

The above-identified application is withdrawn from issue for consideration of a submission under 37 CFR 1.114 (request for continued examination). See 37 CFR 1.313(c)(2).

Petitioner is advised that the issue fee paid on December 15, 2005 in the above-identified application cannot be refunded. If, however, the above-identified application is again allowed, petitioner may request that it be applied towards the issue fee required by the new Notice of Allowance.[1]

Telephone inquiries should be directed to Irvin Dingle at (571) 272-3210.

This matter is being referred to Technology Center AU 2133 for processing of the request for continued examination under 37 CFR 1.114 and for consideration of the concurrently filed Information Disclosure Statement.

Irvin Dingle
Petitions Examiner
Office of Petitions

---

[1] The request to apply the issue fee to the new Notice may be satisfied by completing and returning the new Issue Fee Transmittal Form PTOL-85(b), which includes the following language thereon: Commissioner for Patents is requested to apply the Issue Fee and Publication Fee (if any) or re-apply any previously paid issue fee to the application identified above. Petitioner is advised that, whether a fee is indicated as being due or not, the Issue Fee Transmittal Form **must** be completed and timely submitted to avoid abandonment. Note the language in bold text on the first page of the Notice of Allowance and Fee(s) Due (PTOL-85).

UNITED STATES PATENT AND TRADEMARK OFFICE

Commissioner for Patents
United States Patent and Trademark Office
P.O. Box 1450
Alexandria, VA 22313-1450
www.uspto.gov

COPY MAILED
JUL 2 1 2006
OFFICE OF PETITIONS

TRASK BRITT
P.O. BOX 2550
SALT LAKE CITY UT 84110

In re Application of	:	
Jerry D. McBride	:	
Application No. 10/794,696	:	ON PETITION
Filed: March 5, 2004	:	
Attorney Docket No. 2269-4299.1US(99-0876.01	:	

This is a decision on the petition, filed July 14, 2006, under 37 CFR 1.313(c)(2) to withdraw the above-identified application from issue after payment of the issue fee.

The petition is **GRANTED.**

The above-identified application is withdrawn from issue for consideration of a submission under 37 CFR 1.114 (request for continued examination). See 37 CFR 1.313(c)(2).

Petitioner is advised that the issue fee paid on June 28, 2006, in the above-identified application cannot be refunded. If, however, the above-identified application is again allowed, petitioner may request that it be applied towards the issue fee required by the new Notice of Allowance.[1]

Telephone inquiries should be directed to the undersigned at (571) 272-3208.

The examiner of Technology Center AU 2133 will consider the request for continued examination under 37 CFR 1.114.

Karen Creasy

Karen Creasy
Petitions Examiner
Office of Petitions

---

[1] The request to apply the issue fee to the new Notice may be satisfied by completing and returning the new Issue Fee Transmittal Form PTOL-85(b), which includes the following language thereon: "Commissioner for Patents is requested to apply the Issue Fee and Publication Fee (if any) or re-apply any previously paid issue fee to the application identified above." Petitioner is advised that, whether a fee is indicated as being due or not, the Issue Fee Transmittal Form **must** be completed and timely submitted to avoid abandonment. Note the language in bold text on the first page of the Notice of Allowance and Fee(s) Due (PTOL-85).

UNITED STATES PATENT AND TRADEMARK OFFICE

Commissioner for Patents
United States Patent and Trademark Office
P.O. Box 1450
Alexandria, VA 22313-1450
www.uspto.gov

PATENT COUNSEL
APPLIED MATERIALS, INC.
LEGAL AFFAIRS DEPT.
P.O. BOX 450A
Santa Clara CA 95052

COPY MAILED

SEP 07 2007

OFFICE OF PETITIONS

In re Application of	:	
Olsen	:	
Application No. 10/794,707	:	DECISION ON PETITIONS
Filed: March 4, 2004	:	UNDER 37 CFR 1.78(a)(3) AND (a)(6)
Attorney Docket No.	:	
008280USAL/FEP/GCM/RKK	:	

This is a decision on the petitions under 37 CFR §§ 1.78(a)(3) and 1.78(a)(6), filed April 12, 2007 to accept an unintentionally delayed claim under 35 U.S.C. §§ 120 and 119(e) for benefit of priority to the prior-filed applications set forth in the concurrently filed amendment.

The petition is **DISMISSED.**

A petition for acceptance of a claim for late priority under 37 CFR §§ 1.78(a)(3) and 1.78(a)(6) is only applicable to those applications filed on or after November 29, 2000. Further, the petition is appropriate only after the expiration of the period specified in 37 CFR §§ 1.78(a)(2)(ii) and 1.78(a)(5)(ii). In addition, the petition under 37 CFR §§ 1.78(a)(3) and 1.78(a)(6) must be accompanied by:

(1) the reference required by 35 U.S.C. §§ 120 and 119(e) and 37 CFR §§ 1.78(a)(2)(i) and 1.78(a)(5)(i) of the prior-filed application, unless previously submitted;
(2) the surcharge set forth in § 1.17(t); and
(3) a statement that the entire delay between the date the claim was due under 37 CFR §§ 1.78(a)(2)(ii) and 1.78(a)(5)(ii) and the date the claim was filed was unintentional. The Director may require additional information where there is a question whether the delay was unintentional.

The petition does not satisfy item (1) above.

After review of the amendment submitted with the instant petition, the examiner has determined that the amendment will not be entered. Accordingly, the claim for priority will not be entered

without the submission of a Request for Continued Examination (RCE) on renewed petition. Furthermore, it appears that the application may now be abandoned.

Pursuant to petitioner's request, deposit account no. 20-0782 will be charged the $1370.00 petition fee.

Further correspondence with respect to this matter should be addressed as follows:

By mail: Mail Stop PETITIONS
Commissioner for Patents
Post Office Box 1450
Alexandria, VA 22313-1450

By hand: Customer Service Window
Mail Stop Petitions
Randolph Building
401 Dulany Street
Alexandria, VA 22314

By fax: (571) 273-8300
ATTN: Office of Petitions

Any questions concerning this matter may be directed to Charlema Grant at (571) 272-3215.

Christina T. Donnell

Christina T. Donnell
Senior Petitions Attorney
Office of Petitions

UNITED STATES PATENT AND TRADEMARK OFFICE

Commissioner for Patents
United States Patent and Trademark Office
P.O. Box 1450
Alexandria, VA 22313-1450
www.uspto.gov

HARNESS, DICKEY & PIERCE, P.L.C.
P.O. BOX 828
BLOOMFIELD HILLS, MI 48303

COPY MAILED
JUL 27 2006
OFFICE OF PETITIONS

In re Patent No. 6,974,400 :
Issue Date: December 13, 2005 :
Application No. 10/794,712 : ON PETITION
Filed: March 5, 2004 :
Attorney Docket No. 6978-000240/CPC :

This is a decision on the petition filed May 24, 2006, which is being treated as a request under 37 CFR 3.81(b)[1] to correct the assignee on the front page of the above-identified patent by way of Certificate of Correction.

The petition is dismissed.

Petitioner requests issuance of a certificate of correction in the name of "MAGNA POWERTRAIN USA, INC." However, Office PALM computer database assignment records do not reflect that an assignment in the name of the assignee sought by the certificate of correction was ever recorded. Office PALM computer database assignment records indicate an assignment to "NEW VENTURE GEAR, INC." only.

Accordingly, if reconsideration of this decision is requested, petitioner must supply either the reel and frame number where the recorded assignment to "MAGNA POWERTRAIN USA, INC." appears or supply a copy of the "Notice of Recordation of Assignment Document." If the assignment was not recorded, or submitted for recordation, prior to issuance of this patent, a certificate of correction would not be in order. See 37 CFR 3.81(b) (effective June 25, 2004) and note MPEP Sections 307 and 1481.

Further correspondence with respect to this matter should be addressed as follows:

By mail: Mail Stop Petition
Commissioner for Patents
Box 1450
Alexandria, VA 22313

[1] *See* Official Gazette of June 22, 2004.

By FAX: (571) 273-8300
Attn: Office of Petitions

By hand: Customer Service Window
Randolph Building
401 Dulany Street
Alexandria, VA 22314

Telephone inquiries should be directed to the undersigned at (571) 272-3228.

Edward J. Tannouse
Petitions Attorney
Office of Petitions
Office of the Deputy Commissioner
for Patent Examination Policy

UNITED STATES PATENT AND TRADEMARK OFFICE

Commissioner for Patents
United States Patent and Trademark Office
P.O. Box 1450
Alexandria, VA 22313-1450
www.uspto.gov

COPY MAILED

JAN 0 3 2007

OFFICE OF PETITIONS

DONALD E. SCHREIBER
POST OFFICE BOX 2926
KINGS BEACH, CA 96143-2926

In re Application of

Michael William Pitts
Application No. 10/794,723
Filed: March 4, 2004
Attorney Docket No. 1936C0N7

DECISION ON PETITION
TO WITHDRAW
FROM RECORD

This is a decision on the Request to Withdraw as attorney or agent of record under 37 C.F.R. § 1.36(b), filed October 2, 2006.

The request is **NOT APPROVED**.

A grantable request to withdraw as attorney/agent of record must be signed by every attorney/agent seeking to withdraw or contain a clear indication that one attorney is signing on behalf of another/others. A request to withdraw will not be approved unless at least 30 (thirty) days would remain between the date of approval and the later of the expiration date of a time to file a response or the expiration date of the maximum time period which can be extended under 37 C.F.R. § 1.136(a).

The request cannot be approved because no reasons for withdrawal have been provided. The Office cannot, at this time, determine whether practitioner's request is one of the mandatory or permissive reasons enumerated in 37 CFR 10.40. Any subsequent requests must include reasons for withdrawal. Please note that there is a space provided for on PTO/SB/83 (Request to Withdraw as Attorney or Agent) to supply practitioner's reasons.

All future communications from the Office will continue to be directed to the above-listed address until otherwise notified by applicant.

Telephone inquiries concerning this decision should be directed to Terri Williams at 571-272- 2991.

Terri Williams

Terri Williams
Petitions Examiner
Office of Petitions

cc: **Blaney Harper, Esq.**
Jones, Day, Reavis & Poque
51 Louisiana Avenue, NW
Washington D.C. 20001

UNITED STATES PATENT AND TRADEMARK OFFICE

COMMISSIONER FOR PATENTS
UNITED STATES PATENT AND TRADEMARK OFFICE
P.O. BOX 1450
ALEXANDRIA, VA 22313-1450
www.uspto.gov

Dort Close IP Law Group, Professional Corporation
Attn: VRBIA IP Department
Box 66148
Washington, DC 20035

MAILED

NOV 05 2004

DIRECTOR'S OFFICE
TECHNOLOGY CENTER 3600

In re application of	:	**DECISION ON PETITION**
David Bogart Dort	:	**TO MAKE SPECIAL**
Application No. 10/794,748	:	**(ACCELERATED**
Filed: March 5, 2004	:	**EXAMINATION)**
For: CONTINGENCY NETWORK FOR ACCOUNTS OR INFORMATION		

This is in response to the petition filed on March 5, 2004 to make the above-identified application special on the basis of special examining procedure for certain new applications - accelerated examination as set forth in MPEP § 708.02 VIII.

The requirements for granting special status under this section are: (A) a petition to make special accompanied by the fee set forth in 37 CFR 1.17(h); (B) all claims being directed to a single invention, or an election without traverse if the Office determines that all the claims are not directed to a single invention; (C) a statement that a pre-examination search was made listing the field of search; (D) one copy of each of the references deemed most closely related to the subject matter encompassed by the claims if said references are not already of record; and (E) a detailed discussion of how the claimed subject matter is patentable over the references in accordance with 37 CFR 1.111 (b) and (c).

The petition fails to adequately meet requirement (B) above. In this regard, item (B) is not met because the petition fails to include an election without traverse, or a statement that applicant is willing to elect without traverse should a restriction or election be required.

For the above stated reason, the petition is **DISMISSED**.

Petitioner is given one more opportunity to perfect the petition. Any request for reconsideration must be filed within TWO MONTHS of the date of this decision. Extensions of time under 37 CFR 1.136(a) are permitted.

Applicant should promptly submit a renewed petition to the Commissioner for Patents, P.O. Box 1450, Alexandria, VA 22313-1450. The envelope should indicate that the correspondence be brought to the attention of Technology Center 3600.

Until the renewed petition is submitted, the application will be returned to the examiner's docket to await treatment on the merits in the normal order of examination.

Randolph A. Reese
Special Programs Examiner
Technology Center 3600
(703) 308-2121

RAR/rwg: 10/27/04

UNITED STATES PATENT AND TRADEMARK OFFICE

Commissioner for Patents
United States Patent and Trademark Office
P.O. Box 1450
Alexandria, VA 22313-1450
www.uspto.gov

ROBIN M. SILVA, ESQ.
DORSEY & WHITNEY LLP
INTELLECTUAL PROPERTY DEPARTMENT
FOUR EMBARCADERO CENTER, SUITE 3400
SAN FRANCISCO, CA 94111-4187

COPY MAILED

MAY 0 5 2005

OFFICE OF PETITIONS

In re Application of	:	
John R. Desjarlais et al	:	
Application No. 10/794,751	:	DECISION ON PETITION
Filed: March 5, 2004	:	UNDER 37 CFR 1.78(a)(3)
Attorney Docket No. A-72175-1		

This is a decision on the petition filed October 18, 2004, under 37 CFR 1.78(a)(3), to accept an unintentionally delayed claim under 35 U.S.C. § 120 for the benefit of priority to the prior-filed nonprovisional application, as set forth in the concurrently filed amendment.

The petition is **GRANTED**.

A petition for acceptance of a claim for late priority under 37 CFR 1.78(a)(3) is only applicable to those applications filed on or after November 29, 2000. Further, the petition is appropriate only after the expiration of the period specified in 37 CFR 1.78(a)(2)(ii). In addition, the petition under 37 CFR 1.78(a)(3) must be accompanied by:

> **(1)** the reference required by 35 U.S.C. § 120 and 37 CFR 1.78(a)(2)(i) of the prior-filed application, unless previously submitted;
> **(2)** the surcharge set forth in § 1.17(t); and
> **(3)** a statement that the entire delay between the date the claim was due under 37 CFR 1.78(a)(2)(ii) and the date the claim was filed was unintentional. The Commissioner may require additional information where there is a question whether the delay was unintentional.

The instant pending application was filed on March 5, 2004, and was pending at the time of filing of the instant petition. A reference to the prior-filed nonprovisional application has been included in an amendment to the first sentence of the specification following the title as required by 37 CFR 1.78(a)(2)(iii).

The instant nonprovisional application was filed after November 29, 2000, and the claim herein for the benefit of priority to the prior-filed nonprovisional application is submitted after

expiration of the period specified in 37 CFR 1.78(a)(2)(ii). Also, the reference to the prior-filed nonprovisional application was submitted during the pendency of the instant nonprovisional application, for which the claim for benefit of priority is sought. *See* 35 U.S.C. § 120. Accordingly, having found that the instant petition for acceptance of an unintentionally delayed claim for the benefit of priority under 35 U.S.C. § 120 to the prior-filed nonprovisional application satisfies the conditions of 37 CFR 1.78(a)(3), the petition is granted.

The granting of the petition to accept the delayed benefit claim to the prior-filed application under 37 CFR 1.78(a)(3) should not be construed as meaning that the instant application is entitled to the benefit of the prior-filed application. In order for the instant application to be entitled to the benefit of the prior-filed application, all other requirements under 35 U.S.C. § 120 and 37 CFR 1.78(a)(1) and (a)(2) must be met. Similarly, the fact that the corrected Filing Receipt accompanying this decision on petition includes the prior-filed application should not be construed as meaning that applicant is entitled to the claim for benefit of priority to the prior-filed application noted thereon. Accordingly, the examiner will, in due course, consider this benefit claim and determine whether the instant application is entitled to the benefit of the earlier filing date.

Any inquiries concerning this decision may be directed to Irvin Dingle at (571) 272-3210.

This matter is being referred to Technology Center Art Unit 1645.

Frances Hicks

Frances Hicks
Petitions Examiner
Office of Petitions
Office of the Deputy Commissioner
for Patent Examination Policy

Attachment: Corrected Filing Receipt

UNITED STATES PATENT AND TRADEMARK OFFICE

Commissioner for Patents
United States Patent and Trademark Office
P.O. Box 1450
Alexandria, VA 22313-1450
www.uspto.gov

Brinks Hofer Gilson & Lione
P.O. Box 10395
Chicago, IL 60610

COPY MAILED

AUG 29 2007

OFFICE OF PETITIONS

In re Application of	:	
Sato et al.	:	
Application No. 10/794753	:	DECISION ON APPLICATION
Filed: 03/05/2004	:	FOR PATENT TERM ADJUSTMENT
Attorney Docket Number:	:	
9281-4759	:	

This is a decision on the "REQUEST FOR RECONSIDERATION OF PATENT TERM ADJUSTMENT", filed June 21, 2006.

The application for patent term adjustment ("PTA") under 37 CFR 1.705(b) is hereby **GRANTED TO THE EXTENT INDICATED HEREIN**.

The Office has updated the PAIR screen to reflect that the correct Patent Term Adjustment (PTA) determination at the time of the mailing of the Notice of Allowance is zero **(0)** days, including 59 days of Office delay. A copy of the updated PAIR screen, showing the correct determination, is enclosed.

Background

On March 22, 2007, the Office mailed the Determination of Patent Term Adjustment under 35 U.S.C. 154(b) in the above-identified application. The Notice stated that the patent term adjustment (PTA) to date is 0 days.

The present Application for Patent Term Adjustment

On June 21, 2007, applicant timely submitted the instant application for patent term adjustment[1]. Applicant requests that the Determination of Patent Term Adjustment be corrected from 0 days, as indicated on the Determination of PTA mailed March 22, 2006, to an adjustment of 6 days. In support of this request, applicant notes that in reply to a non-final Office action mailed by this Office on December 23, 2005, Applicant filed a reply on March 23, 2006. Applicant asserts that the Office failed to process the response to the Office action, filed March 23, 2006, which resulted in the erroneous mailing of a Notice of Abandonment. The Notice of Abandonment was

[1] PALM records show that the Issue Fee payment was received in the Office on June 22, 2007.

subsequently withdrawn; however, Applicant avers that the PTO failed to timely reply to the response to the Office action filed March 23, 2006, which resulted in delays of 59 days under 37 CFR 1.702(a)[2] ((for taking more than four (4) months to respond to either a reply under 35 U.S.C. 132 or an appeal taken under 35 U.S.C. 134.)). The Office mailed a Notice of Non-Compliant Amendment on September 20, 2006, which was 59 days after four (4) months from the filing of Applicants reply on March 23, 2006.

Applicant also avers that the period of Adjustment under 37 CFR 1.704(b) should not adversely affect the delay by Applicants, because, Applicant reiterates, the PTO delayed in processing the response to the non-final office action, and the failure of this Office to process the response should not adversely affect the delay by applicants. Accordingly, the delay of 209 days should not be attributed to Applicant.

Applicant does not dispute the delay of 53 days attributed to Applicant under 37 CFR 1.704(c)(8), for filing Information Disclosure Statements on July 7, 2005 (42 days) and October 17, 2005 (11 days), after filing replies to Office communications on May 26, 2005 and October 6, 2005 respectively. Applicant calculates the delay at 59 days of office delay, minus 53 days of Applicant delay, for a PTA of 6 days.

On Applicant Delay

The circumstances of the mailing of the Notice have been considered. Office records reveal that a non-final Office action was mailed by this Office on December 23, 2005. The reply to the non-final Office action, filed by Applicant on March 23, 2006, included a non-compliant amendment. Applicant was so notified in a Notice of Non-Compliant Amendment, mailed September 20, 2006. Applicant filed a reply to the Notice of Non-Compliant Amendment on October 18, 2006[3]. Applicant is reminded that it is the Applicant's responsibility to file a complete and proper reply to the Office action as the condition of the case may require. See, 37 CFR 1.135(c) and 37 CFR 1.704(c)(7). Under 37 CFR 1.704(c)(7), Submission of a Reply Having an Omission, Applicant is assessed a delay for the period beginning on the day after the date the reply having an mission was filed (March 24, 2006) and ending on the date that the reply or other paper correcting the omission was filed (October 18, 2006). The delay of 209 days was thus properly attributed to Applicant.

On Office Delay

Regarding Applicant's assertion, that the Office failed to timely reply to the response to the Office action filed March 23, 2006, which resulted in delays of 59 days under 37 CFR 1.702(a): the Office mailed a Notice of Non-Compliant Amendment on September 20, 2006, which was 59 days after four (4) months from the filing of Applicants reply on March 23, 2006. An adjustment

[2] The petition incorrectly petitions for an adjustment pursuant to 37 CFR 1.703(a(2), (a reply under 35 U.S.C. 111); however, the reply here was to an action mailed under 35 U.S.C. 132.

[3] Applicant fails to note in the present petition that the reply was noncompliant, but simply referes to "the next Office action" mailed on September 20, 2006. The "next Office action was a Notice of Non-Compliant Amendment, informing Applicant that the reply was non-compliant, nor does Applicant note that a rely to the Notice of Non-Compliant Amendment was filed on October 18, 2006.

of 59 days is properly attributed to the Office in accordance with 37 CFR 1.702(a)(2). Thus the total period of Office delay is fifty-nine (59) days.

Conclusion

The correct patent term adjustment (PTA) under 37 CFR §§ 1.702(a)(2) and 1.704(b) at the time of the allowance is two-hundred sixty-two (209 + 53 = 262) days of Applicant delay, minus fifty-nine (59) days of Office delay, or **zero (0) days**. The Office will adjust the PAIR screen consistent with this Decision, and to reflect that the PTA determination at the time of mailing of the instant letter reflects an adjustment of 0 days. A copy of the updated PAIR screen showing the correct determination is enclosed.

In view thereof, at the time of allowance, the application is entitled to an adjustment of 0 days.

Applicant's deposit account has been charged the petition fee of $200.00 as authorized in the instant petition.

The application is being forwarded to the Publications Division for issuance of a patent. The patent term adjustment indicated on the patent (as shown on the Issue Notification mailed about three weeks prior to patent issuance) will include any additional adjustment accrued both for Office delay in issuing the patent more than four months after payment of the issue fee and satisfaction of all outstanding requirements, and for the Office taking in excess of three years to issue the patent (to the extent that the three-year period does not overlap with periods already accorded).

Telephone inquiries specific to this matter should be directed to Petitions Attorney Derek L. Woods at (571) 272-3232.

Nancy Johnson
Senior Petitions Attorney
Office of Petitions

Enclosure: Copy of REVISED PALM Calculations

Day : Tuesday
Date: 8/28/2007

PALM INTRANET

Time: 20:55:05

PTA Calculations for Application: 10/794753			
Application Filing Date:	03/05/2004	PTO Delay (PTO):	0
Issue Date of Patent:		Three Years:	0
Pre-Issue Petitions:	0	Applicant Delay (APPL):	262
Post-Issue Petitions:	0	Total PTA (days):	0
PTO Delay Adjustment:	59		

File Contents History

Number	Date	Contents Description	PTO	APPL	START
69	08/28/2007	ADJUSTMENT OF PTA CALCULATION BY PTO	59		
60	03/22/2007	MAIL NOTICE OF ALLOWANCE			
59	03/16/2007	ISSUE REVISION COMPLETED			
58	03/16/2007	DOCUMENT VERIFICATION			
57	03/16/2007	NOTICE OF ALLOWANCE DATA VERIFICATION COMPLETED			
56	03/16/2007	CASE DOCKETED TO EXAMINER IN GAU			
55	03/13/2007	NOTICE OF ALLOWABILITY			
54	03/02/2007	DATE FORWARDED TO EXAMINER			
53	02/27/2007	AMENDMENT AFTER FINAL REJECTION			
52	12/27/2006	MAIL FINAL REJECTION (PTOL - 326)			
51	12/21/2006	FINAL REJECTION			
50	10/23/2006	DATE FORWARDED TO EXAMINER			
49	10/18/2006	RESPONSE AFTER NON-FINAL ACTION		209	45
48	09/20/2006	MAIL NOTICE OF INFORMAL OR NON-RESPONSIVE AMENDMENT			
47	01/27/2006	INFORMATION DISCLOSURE STATEMENT CONSIDERED			
46	07/26/2006	DATE FORWARDED TO EXAMINER			
45.1	03/23/2006	INFORMAL OR NON-RESPONSIVE AMENDMENT AFTER EXAMINER ACTION			
45	03/23/2006	RESPONSE AFTER NON-FINAL ACTION			
44	07/26/2006	MAIL NOTICE OF RESCINDED ABANDONMENT			
43	07/25/2006	NOTICE OF RESCINDED ABANDONMENT IN TCS			
42	07/10/2006	MAIL ABANDONMENT FOR FAILURE TO RESPOND TO OFFICE ACTION			
		ABANDONMENT FOR FAILURE TO RESPOND TO			

41	07/06/2006	OFFICE ACTION			
40	01/27/2006	REFERENCE CAPTURE ON IDS			
39	01/27/2006	INFORMATION DISCLOSURE STATEMENT (IDS) FILED			
38	12/23/2005	MAIL NON-FINAL REJECTION			
37	12/21/2005	NON-FINAL REJECTION			
36	10/17/2005	INFORMATION DISCLOSURE STATEMENT CONSIDERED			
35	07/07/2005	INFORMATION DISCLOSURE STATEMENT CONSIDERED			
34	03/05/2004	INFORMATION DISCLOSURE STATEMENT CONSIDERED			
33	07/02/2004	INFORMATION DISCLOSURE STATEMENT CONSIDERED			
32	10/17/2005	REFERENCE CAPTURE ON IDS			
31	10/17/2005	INFORMATION DISCLOSURE STATEMENT (IDS) FILED		11	29
30	10/12/2005	DATE FORWARDED TO EXAMINER			
29	10/06/2005	RESPONSE TO ELECTION / RESTRICTION FILED			
28	10/06/2005	REQUEST FOR EXTENSION OF TIME - GRANTED			
27	08/22/2005	MAIL EXAMINER INTERVIEW SUMMARY (PTOL - 413)			
26	08/10/2005	EXAMINER INTERVIEW SUMMARY RECORD (PTOL - 413)			
25	08/09/2005	MAIL RESTRICTION REQUIREMENT			
24	08/08/2005	REQUIREMENT FOR RESTRICTION / ELECTION			
23	07/07/2005	INFORMATION DISCLOSURE STATEMENT (IDS) FILED		42	20
22	06/08/2005	IFW TSS PROCESSING BY TECH CENTER COMPLETE			
21	06/03/2005	DATE FORWARDED TO EXAMINER			
20	05/26/2005	RESPONSE TO ELECTION / RESTRICTION FILED			
19	03/05/2004	REQUEST FOR FOREIGN PRIORITY (PRIORITY PAPERS MAY BE INCLUDED)			
18	03/05/2004	INFORMATION DISCLOSURE STATEMENT (IDS) FILED			
17	04/27/2005	MAIL RESTRICTION REQUIREMENT			
16	04/26/2005	REQUIREMENT FOR RESTRICTION / ELECTION			
15	03/05/2004	PRELIMINARY AMENDMENT			
14	09/07/2004	CASE DOCKETED TO EXAMINER IN GAU			

13	07/02/2004	REFERENCE CAPTURE ON IDS			
12	07/02/2004	INFORMATION DISCLOSURE STATEMENT (IDS) FILED			
11	05/25/2004	APPLICATION RETURN FROM OIPE			
10	05/25/2004	APPLICATION IS NOW COMPLETE			
9	05/25/2004	APPLICATION RETURN TO OIPE			
8	05/25/2004	APPLICATION RETURN FROM OIPE			
7	05/25/2004	APPLICATION RETURN TO OIPE			
6	05/25/2004	APPLICATION DISPATCHED FROM OIPE			
5	05/25/2004	APPLICATION IS NOW COMPLETE			
4	04/05/2004	CLEARED BY OIPE CSR			
3	04/05/2004	CASE CLASSIFIED BY OIPE			
2	03/16/2004	IFW SCAN & PACR AUTO SECURITY REVIEW			
1	03/05/2004	INITIAL EXAM TEAM NN			

Search Another: Application# Search

EXPLANATION OF PTA CALCULATION

EXPLANATION OF PTE CALCULATION

To go back use Back button on your browser toolbar.

Back to PALM | ASSIGNMENT | OASIS | Home page

SPE RESPONSE FOR CERTIFICATE OF CORRECTION

Paper No.: _____

DATE : September 21, 2006

TO SPE OF : ART UNIT 3662

SUBJECT : Request for Certificate of Correction for Appl. No.: 10/794764 patent No.: 7,019,683

Please respond to this request for a certificate of correction within 7 days.

Please review the requested changes/corrections as shown in the **COCIN** document(s) in the IFW application image. No new matter should be introduced, nor should the scope or meaning of the claims be changed.

Please complete the response (see below) and forward the completed response to scanning using document code **COCX**.

Magdalene Talley

Certificates of Correction Branch

703-308-9390 ext. 116

Thank You For Your Assistance

The request for issuing the above-identified correction(s) is hereby:

Note your decision on the appropriate box.

- ☒ **Approved** — **All** changes apply.
- ☐ **Approved in Part** — Specify below which changes **do not** apply.
- ☐ **Denied** — State the reasons for denial below.

Comments: _____

Thomas M Tarrega — **SPE**

3662 — **Art Unit**

UNITED STATES PATENT AND TRADEMARK OFFICE

Commissioner for Patents
United States Patent and Trademark Office
P.O. Box 1450
Alexandria, VA 22313-1450
www.uspto.gov

PATENT COUNSEL
APPLIED MATERIALS, INC.
LEGAL AFFAIRS DEPT.
P.O. BOX 450A
Santa Clara CA 95052

COPY MAILED

DEC 28 2007

OFFICE OF PETITIONS

In re Application of
Christopher Olsen
Application No. 10/794,707
Filed: March 4, 2004
Attorney Docket No.
008280USAL/FEP/GCM/RKK

DECISION ON PETITIONS
UNDER 37 CFR 1.78(a)(3) AND (a)(6)

This is a decision on the renewed petitions under 37 CFR §§ 1.78(a)(3) and 1.78(a)(6), filed October 3, 2007, to accept an unintentionally delayed claim under 35 U.S.C. §§120 and 119(e) for the benefit of the prior-filed applications set forth in the concurrently filed amendment.

The petitions are **GRANTED.**

A petition for acceptance of a claim for late priority under 37 CFR §§ 1.78(a)(3) and 1.78(a)(6) is only applicable to those applications filed on or after November 29, 2000. Further, the petition is appropriate only after the expiration of the period specified in 37 CFR §§ 1.78(a)(2)(ii) and 1.78(a)(5)(ii). In addition, the petition under 37 CFR §§ 1.78(a)(3) and 1.78(a)(6) must be accompanied by:

(1) the reference required by 35 U.S.C. §§ 120 and 119(e) and 37 CFR §§ 1.78(a)(2)(i) and 1.78(a)(5)(i) of the prior-filed application, unless previously submitted;

(2) the surcharge set forth in § 1.17(t); and

(3) a statement that the entire delay between the date the claim was due under 37 CFR §§ 1.78(a)(2)(ii) and 1.78(a)(5)(ii) and the date the claim was filed was unintentional. The Director may require additional information where there is a question whether the delay was unintentional.

Additionally, the instant nonprovisional application must be pending at the time of filing of the reference to the prior-filed provisional application as required by 37 CFR 1.78(a)(5)(ii). Further, the nonprovisional application claiming the benefit of the prior-filed provisional application must have been filed within twelve months of the filing date of the prior-filed provisional application.

All the above requirements having been satisfied, the late claim for benefit of priority under 35 U.S.C. §§ 120 and 119(e) is accepted as being unintentionally delayed.

The granting of the petition to accept the delayed benefit claim to the prior-filed applications under 37 CFR §§ 1.78(a)(3) and 1.78(a)(6) should not be construed as meaning that this application is entitled to the benefit of the filing date of the prior-filed applications. In order for this application to be entitled to the benefit of the prior-filed applications, all other requirements under 35 U.S.C. §§120 and 1.78(a)(1) and (a)(2) and under 35 U.S.C. §119(e) and 37 CFR 1.78(a)(4) and (a)(5) must be met. Similarly, the fact that the corrected Filing Receipt accompanying this decision on petition includes the prior-filed applications should not be construed as meaning that applicant is entitled to the claim for benefit of priority to the prior-filed applications noted thereon. Accordingly, the examiner will, in due course, consider this benefit claim and determine whether the application is entitled to the benefit of the earlier filing date.

A corrected Filing Receipt, which includes the priority claim to the prior-filed applications, accompanies this decision on petition.

Any questions concerning this matter may be directed to Charlema Grant at (571) 272-3215. All other inquiries concerning either the examination procedures or status of the application should be directed to the Technology Center.

This application has been abandoned in favor of a continuing application.

Anthony Knight
Supervisor
Office of Petitions

ATTACHMENT : Corrected Filing Receipt

UNITED STATES PATENT AND TRADEMARK OFFICE

UNITED STATES DEPARTMENT OF COMMERCE
United States Patent and Trademark Office
Address: COMMISSIONER FOR PATENTS
P.O. Box 1450
Alexandria, Virginia 22313-1450
www.uspto.gov

APPLICATION NUMBER	FILING or 371(c) DATE	GRP ART UNIT	FIL FEE REC'D	ATTY.DOCKET.NO	TOT CLAIMS	IND CLAIMS
10/794,707	03/04/2004	2822	1036	008280USAL/FEP/GCM/RKK	30	4

CONFIRMATION NO. 8563

CORRECTED FILING RECEIPT

PATENT COUNSEL
APPLIED MATERIALS, INC.
LEGAL AFFAIRS DEPT.
P.O. BOX 450A
Santa Clara, CA 95052

OC000000027476177

Date Mailed: 12/28/2007

Receipt is acknowledged of this non-provisional patent application. The application will be taken up for examination in due course. Applicant will be notified as to the results of the examination. Any correspondence concerning the application must include the following identification information: the U.S. APPLICATION NUMBER, FILING DATE, NAME OF APPLICANT, and TITLE OF INVENTION. Fees transmitted by check or draft are subject to collection. Please verify the accuracy of the data presented on this receipt. **If an error is noted on this Filing Receipt, please write to the Office of Initial Patent Examination's Filing Receipt Corrections. Please provide a copy of this Filing Receipt with the changes noted thereon. If you received a "Notice to File Missing Parts" for this application, please submit any corrections to this Filing Receipt with your reply to the Notice. When the USPTO processes the reply to the Notice, the USPTO will generate another Filing Receipt incorporating the requested corrections**

Applicant(s)

Christopher Olsen, Fremont, CA;

Power of Attorney:

Stanley Sokoloff--25128
Edwin Taylor--25129
Lawrence Edelman--25226
Robert Mulcahy--25436
Peter Sgarbossa--25610
Roger Blakely Jr--25831
Norman Zafman--26250
Michael Einschlag--29301
Eric Hyman--30139
James Scheller Jr--31195

Domestic Priority data as claimed by applicant

This appln claims benefit of 60/453,057 03/07/2003
and is a CIP of 10/461,143 06/12/2003 PAT 7,122,454
which claims benefit of 60/388,599 06/12/2002
and claims benefit of 60/399,765 07/30/2002

Foreign Applications

If Required, Foreign Filing License Granted: 05/24/2004

The country code and number of your priority application, to be used for filing abroad under the Paris Convention, is **US 10/794,707**

Projected Publication Date: Not Applicable

Non-Publication Request: No

Early Publication Request: No

Title

Two-step post nitridation annealing for lower EOT plasma nitrided gate dielectrics

Preliminary Class

438

PROTECTING YOUR INVENTION OUTSIDE THE UNITED STATES

Since the rights granted by a U.S. patent extend only throughout the territory of the United States and have no effect in a foreign country, an inventor who wishes patent protection in another country must apply for a patent in a specific country or in regional patent offices. Applicants may wish to consider the filing of an international application under the Patent Cooperation Treaty (PCT). An international (PCT) application generally has the same effect as a regular national patent application in each PCT-member country. The PCT process **simplifies** the filing of patent applications on the same invention in member countries, but **does not result** in a grant of "an international patent" and does not eliminate the need of applicants to file additional documents and fees in countries where patent protection is desired.

Almost every country has its own patent law, and a person desiring a patent in a particular country must make an application for patent in that country in accordance with its particular laws. Since the laws of many countries differ in various respects from the patent law of the United States, applicants are advised to seek guidance from specific foreign countries to ensure that patent rights are not lost prematurely.

Applicants also are advised that in the case of inventions made in the United States, the Director of the USPTO must issue a license before applicants can apply for a patent in a foreign country. The filing of a U.S. patent application serves as a request for a foreign filing license. The application's filing receipt contains further information and guidance as to the status of applicant's license for foreign filing.

Applicants may wish to consult the USPTO booklet, "General Information Concerning Patents" (specifically, the section entitled "Treaties and Foreign Patents") for more information on timeframes and deadlines for filing foreign patent applications. The guide is available either by contacting the USPTO Contact Center at 800-786-9199, or it can be viewed on the USPTO website at http://www.uspto.gov/web/offices/pac/doc/general/index.html.

For information on preventing theft of your intellectual property (patents, trademarks and copyrights), you may wish to consult the U.S. Government website, http://www.stopfakes.gov. Part of a Department of Commerce initiative, this website includes self-help "toolkits" giving innovators guidance on how to protect intellectual property in specific countries such as China, Korea and Mexico. For questions regarding patent enforcement issues, applicants may call the U.S. Government hotline at 1-866-999-HALT (1-866-999-4158).

LICENSE FOR FOREIGN FILING UNDER

Title 35, United States Code, Section 184

Title 37, Code of Federal Regulations, 5.11 & 5.15

GRANTED

The applicant has been granted a license under 35 U.S.C. 184, if the phrase "IF REQUIRED, FOREIGN FILING LICENSE GRANTED" followed by a date appears on this form. Such licenses are issued in all applications where the conditions for issuance of a license have been met, regardless of whether or not a license may be required as

set forth in 37 CFR 5.15. The scope and limitations of this license are set forth in 37 CFR 5.15(a) unless an earlier license has been issued under 37 CFR 5.15(b). The license is subject to revocation upon written notification. The date indicated is the effective date of the license, unless an earlier license of similar scope has been granted under 37 CFR 5.13 or 5.14.

This license is to be retained by the licensee and may be used at any time on or after the effective date thereof unless it is revoked. This license is automatically transferred to any related applications(s) filed under 37 CFR 1.53(d). This license is not retroactive.

The grant of a license does not in any way lessen the responsibility of a licensee for the security of the subject matter as imposed by any Government contract or the provisions of existing laws relating to espionage and the national security or the export of technical data. Licensees should apprise themselves of current regulations especially with respect to certain countries, of other agencies, particularly the Office of Defense Trade Controls, Department of State (with respect to Arms, Munitions and Implements of War (22 CFR 121-128)); the Bureau of Industry and Security, Department of Commerce (15 CFR parts 730-774); the Office of Foreign AssetsControl, Department of Treasury (31 CFR Parts 500+) and the Department of Energy.

NOT GRANTED

No license under 35 U.S.C. 184 has been granted at this time, if the phrase "IF REQUIRED, FOREIGN FILING LICENSE GRANTED" DOES NOT appear on this form. Applicant may still petition for a license under 37 CFR 5.12, if a license is desired before the expiration of 6 months from the filing date of the application. If 6 months has lapsed from the filing date of this application and the licensee has not received any indication of a secrecy order under 35 U.S.C. 181, the licensee may foreign file the application pursuant to 37 CFR 5.15(b).

UNITED STATES PATENT AND TRADEMARK OFFICE

UNITED STATES DEPARTMENT OF COMMERCE
United States Patent and Trademark Office
Address: COMMISSIONER FOR PATENTS
P.O. Box 1450
Alexandria, Virginia 22313-1450
www.uspto.gov

DIGIMARC CORPORATION
9405 SW GEMINI DRIVE
BEAVERTON, OR 97008

Mail Date: 04/21/2010

Applicant	: Kenneth L. Levy	: DECISION ON REQUEST FOR
Patent Number	: 7606790	: RECALCULATION of PATENT
Issue Date	: 10/20/2009	: TERM ADJUSTMENT IN VIEW
Appliction No	: 10/794,770	: OF WYETH AND NOTICE OF INTENT TO
Filed	: 03/03/2004	: ISSUE CERTIFICATE OF CORRECTION
		:

The Request for Recalculation is **GRANTED** to the extent indicated.

The patent term adjustment has been determined to be **853** days. The USPTO will *sua sponte* issue a certificate of correction reflecting the amount of PTA days determined by the recalculation.

Prior to the issuance of the certificate of correction, the USPTO will afford patentee an opportunity to be heard and request reconsideration. Accordingly, patentee has **one month or thirty (30) days**, whichever is longer, to file a request for reconsideration of this patent term adjustment calculation. See 35 U.S.C. 154(b)(3)(B)(ii) and 37 CFR 1.322(a)(4). No extensions of time will be granted under 37 CFR 1.136.

Patentee should use document code PET.OP if electronically filing a request for reconsideration of this patent term adjustment calculation. The patentee must also include the information required by 37 CFR 1.705(b)(2) and the fee required by 37 CFR 1.18(e). If patentee does not file a timely request for reconsideration of this patent term adjustment calculation including the information required by 37 CFR 1.705(b)(2) and the fee required by 37 CFR 1.18(e), the USPTO will issue a certificate of correction reflecting the PTA determination noted above.

Patentee should be aware that in order to preserve the right to review in the United States District Court for the District of Columbia of the USPTO patent term adjustment determination, patentee must ensure that he or she also take the steps required under 35 U.S.C. 154(b)(4)(A) in a timely manner. Nothing in the request for recalculation should be construed as providing an alternative time frame for commencing a civil action under 35 U.S.C. 154(b)(4)(A).

Any questions concerning this decision should be directed to the Office of Patent Legal Administration at 571-272-7702.

UNITED STATES PATENT AND TRADEMARK OFFICE

UNITED STATES DEPARTMENT OF COMMERCE
United States Patent and Trademark Office
Address: COMMISSIONER FOR PATENTS
P.O. Box 1450
Alexandria, Virginia 22313-1450
www.uspto.gov

APPLICATION NO.	FILING DATE	FIRST NAMED INVENTOR	ATTORNEY DOCKET NO.	CONFIRMATION NO.
10/794,777	03/05/2004	Kenneth F. Hollman	82477 (1317)	6080

22242 7590 06/05/2006

FITCH EVEN TABIN AND FLANNERY
120 SOUTH LA SALLE STREET
SUITE 1600
CHICAGO, IL 60603-3406

EXAMINER
KARLSEN, ERNEST F

ART UNIT	PAPER NUMBER
2829	

DATE MAILED: 06/05/2006

Please find below and/or attached an Office communication concerning this application or proceeding.

UNITED STATES PATENT AND TRADEMARK OFFICE

COMMISSIONER FOR PATENTS
UNITED STATES PATENT AND TRADEMARK OFFICE
P.O. BOX 1450
ALEXANDRIA, VA 22313-1450
www.uspto.gov

In re Patent No. HOLLMAN, KENNETH F.	:	
Issue Date: July 12, 2005	:	DECISION GRANTING
Appl No.: 10/794,777	:	PETITION
Filed: March 05, 2004	:	37 CFR 1.324
For: WAFER PROBE STATION	:	
	:	
	:	
	:	

This is a decision on the petition filed October 19, 2005 to correct inventorship under 37 CFR 1.324.

The petition is granted.

The patented file is being forwarded to Certificate of Corrections Branch for issuance of a certificate naming only the actual inventor or inventors.

Ha Nguyen

Ha T. Nguyen
Supervisory Patent Examiner
Art Unit 2829
Technology Center 2800

FITCH EVEN TABIN AND FLANNERY
120 SOUTH LA SALLE STREET
SUITE 1600
CHICAGO, IL 60603-3406

UNITED STATES PATENT AND TRADEMARK OFFICE

COMMISSIONER FOR PATENTS
UNITED STATES PATENT AND TRADEMARK OFFICE
P.O. BOX 1450
ALEXANDRIA, VA 22313-1450
www.uspto.gov

DATE: May 25, 2006

TO: Certificates of Correction Branch

FROM: Ha T. Nguyen
SPE, Art Unit 2829

SUBJECT: REQUEST FOR CERTIFICATE OF CORRECTION

Please issue a Certificate of Correction in U. S. Letters Patent No. 6,917,195 B2 as specified on the attached Certificate.

Ha Nguyen

Ha T. Nguyen, SPE
Art Unit 2829

UNITED STATES PATENT AND TRADEMARK OFFICE

CERTIFICATE

Patent No. 6,917,195 B2

Patented: July 12, 2005

On petition requesting issuance of a certificate for correction of inventorship pursuant to 35 U.S.C. 256, it has been found that the above identified patent, through error and without deceptive intent, improperly sets forth the inventorship. Accordingly, it is hereby certified that the correct inventorship of this patent is:

Kenneth F. Hollman

Daniel L. Harrison

Ha Nguyen

Ha T. Nguyen

Supervisory Patent Examiner

Art Unit 2829

UNITED STATES PATENT AND TRADEMARK OFFICE

Commissioner for Patents
United States Patent and Trademark Office
P.O. Box 1450
Alexandria, VA 22313-1450
www.uspto.gov

DECHERT LLP
P.O. Box 10004
Palo Alto, CA 94303

COPY MAILED

JUL 06 2007

OFFICE OF PETITIONS

In re Application of Jean-Louis Ruelle Application No. 10/794,784 Filed: March 5, 2004 Attorney Docket No. BM45311-D1	DECISION ON PETITION UNDER 37 CFR 1.78(a)(3)

This is a decision on the petition under 37 CFR 1.78(a)(3), filed October 24, 2006, to accept an unintentionally delayed claim under 35 U.S.C. § 120 for the benefit of priority to the prior-filed nonprovisional application set forth in the Application Data Sheet (ADS) filed with the petition.

The petition is **GRANTED**.

A petition for acceptance of a claim for late priority under 37 CFR 1.78(a)(3) is only applicable to those applications filed on or after November 29, 2000. Further, the petition is appropriate only after the expiration of the period specified in 37 CFR 1.78(a)(2)(ii). In addition, the petition under 37 CFR 1.78(a)(3) must be accompanied by:

(1) the reference required by 35 U.S.C. § 120 and 37 CFR 1.78(a)(2)(i) of the prior-filed application, unless previously submitted;

(2) the surcharge set forth in § 1.17(t); and

(3) a statement that the entire delay between the date the claim was due under 37 CFR 1.78(a)(2)(ii) and the date the claim was filed was unintentional. The Director may require additional information where there is a question whether the delay was unintentional.

Rule 37 CFR § 1.78(a)(3) requires a statement that the entire delay between the date the claim was due under 37 CFR § 1.78(a)(2)(ii) and the date the claim was filed was unintentional. Since the statement appearing in the petition varies from the required language, the statement is being construed as the statement required by 37 CFR §1.78(a)(3). If this is not a correct reading of the statement appearing in the petition, petitioner should promptly notify the Office.

All of the above requirements having been satisfied, the late claim for priority under 35 U.S.C. § 120 is accepted as being unintentionally delayed.

The granting of the petition to accept the delayed benefit claim to the prior-filed application under 37 CFR 1.78(a)(3) should not be construed as meaning that this application is entitled to the benefit of the prior-filed application. In order for this application to be entitled to the benefit of the prior-filed application, all other requirements under 35 U.S.C. § 120 and 37 CFR 1.78(a)(1) and (a)(2) must be met. Similarly, the fact that the corrected Filing Receipt accompanying this decision on petition includes the prior-filed application should not be construed as meaning that applicant is entitled to the claim for benefit of priority to the prior-filed application noted thereon. Accordingly, the examiner will, in due course, consider this benefit claim and determine whether the application is entitled to the benefit of the earlier filing date.

A corrected Filing Receipt, which includes the priority claim to the prior-filed nonprovisional application, accompanies this decision on petition.

In accordance with the Application Data Sheet (ADS) filed on October 24, 2006, the correspondence address for the instant application has been changed.

This application is being forwarded to Technology Center Art Unit 1645, for consideration by the examiner of applicant's entitlement to claim benefit of priority under 35 U.S.C. § 120 to the prior-filed application.

Any inquiries concerning this decision may be directed to Andrea Smith at (571) 272-3226. All other inquiries concerning either the examination procedures or status of the application should be directed to the Technology Center.

Frances Hicks

Frances Hicks
Petitions Examiner
Office of Petitions

ATTACHMENT: Corrected Filing Receipt

UNITED STATES PATENT AND TRADEMARK OFFICE

UNITED STATES DEPARTMENT OF COMMERCE
United States Patent and Trademark Office
Address: COMMISSIONER FOR PATENTS
P.O. Box 1450
Alexandria, Virginia 22313-1450
www.uspto.gov

APPL NO.	FILING OR 371(c) DATE	ART UNIT	FIL FEE REC'D	ATTY.DOCKET NO	TOT CLMS	IND CLMS
10/794,784	03/05/2004	1645	1366	BM45311-D1	35	5

CONFIRMATION NO. 5823

CORRECTED FILING RECEIPT

OC000000024671484

37509
DECHERT LLP
P.O. BOX 10004
PALO ALTO, CA 94303

Date Mailed: 07/05/2007

Receipt is acknowledged of this regular Patent Application. It will be considered in its order and you will be notified as to the results of the examination. Be sure to provide the U.S. APPLICATION NUMBER, FILING DATE, NAME OF APPLICANT, and TITLE OF INVENTION when inquiring about this application. Fees transmitted by check or draft are subject to collection. Please verify the accuracy of the data presented on this receipt. **If an error is noted on this Filing Receipt, please mail to the Commissioner for Patents P.O. Box 1450 Alexandria Va 22313-1450. Please provide a copy of this Filing Receipt with the changes noted thereon. If you received a "Notice to File Missing Parts" for this application, please submit any corrections to this Filing Receipt with your reply to the Notice. When the USPTO processes the reply to the Notice, the USPTO will generate another Filing Receipt incorporating the requested corrections (if appropriate).**

Applicant(s)

Jean-Louis Ruelle, Limal, BELGIUM;

Assignment For Published Patent Application

SmithKline Beecham Biologicals S.A., Rixensart, BELGIUM

Power of Attorney: The patent practitioners associated with Customer Number **37509**.

Domestic Priority data as claimed by applicant

This application is a DIV of 09/674,779 01/03/2001 PAT 6,764,834
which is a 371 of PCT/EP99/03038 05/03/1999

Foreign Applications

UNITED KINGDOM 9809683.7 05/06/1998

If Required, Foreign Filing License Granted: 08/10/2004

The country code and number of your priority application, to be used for filing abroad under the Paris Convention, is US10/794,784

Projected Publication Date: Not Applicable

Non-Publication Request: No

Early Publication Request: No

Title

BASB019 proteins and genes from moraxella catarrhalis, antigens, antibodies, and uses

Preliminary Class

424

PROTECTING YOUR INVENTION OUTSIDE THE UNITED STATES

Since the rights granted by a U.S. patent extend only throughout the territory of the United States and have no effect in a foreign country, an inventor who wishes patent protection in another country must apply for a patent in a specific country or in regional patent offices. Applicants may wish to consider the filing of an international application under the Patent Cooperation Treaty (PCT). An international (PCT) application generally has the same effect as a regular national patent application in each PCT-member country. The PCT process **simplifies** the filing of patent applications on the same invention in member countries, but **does not result** in a grant of "an international patent" and does not eliminate the need of applicants to file additional documents and fees in countries where patent protection is desired.

Almost every country has its own patent law, and a person desiring a patent in a particular country must make an application for patent in that country in accordance with its particular laws. Since the laws of many countries differ in various respects from the patent law of the United States, applicants are advised to seek guidance from specific foreign countries to ensure that patent rights are not lost prematurely.

Applicants also are advised that in the case of inventions made in the United States, the Director of the USPTO must issue a license before applicants can apply for a patent in a foreign country. The filing of a U.S. patent application serves as a request for a foreign filing license. The application's filing receipt contains further information and guidance as to the status of applicant's license for foreign filing.

Applicants may wish to consult the USPTO booklet, "General Information Concerning Patents" (specifically, the section entitled "Treaties and Foreign Patents") for more information on timeframes and deadlines for filing foreign patent applications. The guide is available either by contacting the USPTO Contact Center at 800-786-9199, or it can be viewed on the USPTO website at http://www.uspto.gov/web/offices/pac/doc/general/index.html.

For information on preventing theft of your intellectual property (patents, trademarks and copyrights), you may wish to consult the U.S. Government website, http://www.stopfakes.gov. Part of a Department of Commerce initiative, this website includes self-help "toolkits" giving innovators guidance on how to protect intellectual property in specific countries such as China, Korea and Mexico. For questions regarding patent enforcement issues, applicants may call the U.S. Government hotline at 1-866-999-HALT (1-866-999-4158).

LICENSE FOR FOREIGN FILING UNDER
Title 35, United States Code, Section 184
Title 37, Code of Federal Regulations, 5.11 & 5.15

GRANTED

The applicant has been granted a license under 35 U.S.C. 184, if the phrase "IF REQUIRED, FOREIGN FILING LICENSE GRANTED" followed by a date appears on this form. Such licenses are issued in all applications where the conditions for issuance of a license have been met, regardless of whether or not a license may be required as set forth in 37 CFR 5.15. The scope and limitations of this license are set forth in 37 CFR 5.15(a) unless an earlier license has been issued under 37 CFR 5.15(b). The license is subject to revocation upon written notification. The date indicated is the effective date of the license, unless an earlier license of similar scope has been granted

under 37 CFR 5.13 or 5.14.

This license is to be retained by the licensee and may be used at any time on or after the effective date thereof unless it is revoked. This license is automatically transferred to any related applications(s) filed under 37 CFR 1.53(d). This license is not retroactive.

The grant of a license does not in any way lessen the responsibility of a licensee for the security of the subject matter as imposed by any Government contract or the provisions of existing laws relating to espionage and the national security or the export of technical data. Licensees should apprise themselves of current regulations especially with respect to certain countries, of other agencies, particularly the Office of Defense Trade Controls, Department of State (with respect to Arms, Munitions and Implements of War (22 CFR 121-128)); the Bureau of Industry and Security, Department of Commerce (15 CFR parts 730-774); the Office of Foreign Assets Control, Department of Treasury (31 CFR Parts 500+) and the Department of Energy.

NOT GRANTED

No license under 35 U.S.C. 184 has been granted at this time, if the phrase "IF REQUIRED, FOREIGN FILING LICENSE GRANTED" DOES NOT appear on this form. Applicant may still petition for a license under 37 CFR 5.12, if a license is desired before the expiration of 6 months from the filing date of the application. If 6 months has lapsed from the filing date of this application and the licensee has not received any indication of a secrecy order under 35 U.S.C. 181, the licensee may foreign file the application pursuant to 37 CFR 5.15(b).

UNITED STATES PATENT AND TRADEMARK OFFICE

COMMISSIONER FOR PATENTS
UNITED STATES PATENT AND TRADEMARK OFFICE
P.O. BOX 1450
ALEXANDRIA, VA 22313-1450
www.uspto.gov

SEED INTELLECTUAL PROPERTY LAW GROUP PLLC
701 FIFTH AVE
SUITE 5400
SEATTLE WA 98104

COPY MAILED

AUG 17 2009

OFFICE OF PETITIONS

In re Application of
Ruelle
Application No. 10/794,784
Filed: March 5, 2004
Atty. Dkt. No.: 400077.402D1

: DECISION ON APPLICATION
: FOR PATENT TERM ADJUSTMENT

This is a decision on the "PETITION UNDER 37 C.F.R. §1.705 FOR RECONSIDERATION OF PATENT TERM ADJUSTMENT" filed August 7, 2008. This matter is being treated as an application for patent term adjustment under 37 CFR 1.705(b).

The application for patent term adjustment ("PTA") under 37 CFR 1. 705(b) is hereby **GRANTED TO THE EXTENT INDICATED HEREIN**.

The Determination of Patent Term Adjustment mailed May 7, 2008 indicated that the application is entitled to adjustment of 336 days. Applicant argues that the adjustment was improperly reduced 151 days in connection with a supplemental amendment filed March 11, 2008. Applicant further argues that the application is entitled to an additional adjustment of 22 days for the Office's failure to respond within four months from October 10, 2007, the date applicant filed a reply to the non-final Office action.

The correct PTA at the time of the allowance is 487 days, as discussed herein.

Applicant does not dispute the adjustment of 469 days accorded under 37 CFR 1.702(a)(1) in connection with the mailing of the restriction requirement on August 17, 2006. Applicant does not contest the reduction of 90 days accorded under 37 CFR 1.704(b) in connection with the reply to the restriction requirement filed February 15, 2007. Applicant does not contest the reduction of two days accorded under 37 CFR 1.704(b) in connection with the reply to the non-final Office action filed October 12, 2007. While applicant contends the reply was filed October 10, 2007, the date of receipt (October 12, 2007) is the date used for purposes of calculation of patent term adjustment. See, 37 CFR 1.703(f).

Applicant contests the reduction of 151 days in connection with the reply to the supplemental reply received March 11, 2008. Applicant argues that because the reply was submitted at the request of the examiner, no reduction should apply.

Applicant's argument has been carefully reviewed and found convincing. Further, consultation with the examiner of record reveals that the supplemental reply received March 11, 2008 was

submitted at the request of the examiner. According, reduction pursuant to 37 CFR 1.704(c)(8) is not warranted.

Applicant further argues that the application is entitled to an adjustment of 22 days in connection with the examiner interview of March 3, 2008. Applicant calculates the adjustment to have commenced February 11, 2008, the day after the date that is four months after applicant submitted a reply on October 10, 2007, and ended March 3, 2008, the date of the interview.

Applicant is advised that the proper adjustment in this regard of 85 days under 37 CFR 1.702(a)(2) is reflected in the Determination of Patent Term Adjustment under 35 USC 154 mailed May 7, 2008. The adjustment commenced February 13, 2008, the day after the date that is four months after the date that the reply to the non-final Office action was filed, and ended May 7, 2008, the date that the response thereto was mailed. An examiner initiated interview is not deemed a reply within the meaning of 37 CFR 1.702(a).

In view thereof, as of the time of allowance, the application is entitled to an adjustment of 487 days (adjustments totaling 579 days less reductions totaling 92 days).

Receipt is hereby acknowledged of the required PTA application fee of $200.00.

Applicant is further advised that the patent term adjustment indicated in the patent will include any additional patent term accrued pursuant to §§ 1.702(a)(4) and 1.702(b).

The application file is being forwarded to the Office of Data Management for issuance of a patent.

Telephone inquiries specific to this matter should be directed to the undersigned at (571) 272-3205.

Alesia M. Brown
Petitions Attorney
Office of Petitions

Enclosure: Adjusted PAIR Calculation

Day : Sunday
Date: 8/16/2009

PALM INTRANET

Time: 15:44:23

PTA Calculations for Application: 10/794784			
Application Filing Date:	03/05/2004	PTO Delay (PTO):	579
Issue Date of Patent:		Three Years:	0
Pre-Issue Petitions:	0	Applicant Delay (APPL):	243
Post-Issue Petitions:	0	Total PTA (days):	487
PTO Delay Adjustment:	151		

File Contents History

Number	Date	Contents Description	PTO	APPL	START
71	08/16/2009	ADJUSTMENT OF PTA CALCULATION BY PTO	151		
57	05/07/2008	MAIL NOTICE OF ALLOWANCE	85		42
56	05/07/2008	ISSUE REVISION COMPLETED			
55	05/07/2008	DOCUMENT VERIFICATION			
54	04/28/2008	NOTICE OF ALLOWANCE DATA VERIFICATION COMPLETED			
53	04/28/2008	CASE DOCKETED TO EXAMINER IN GAU			
52	04/28/2008	EXAMINER'S AMENDMENT COMMUNICATION			
51	04/28/2008	NOTICE OF ALLOWABILITY			
50	04/23/2008	EXAMINER INTERVIEW SUMMARY RECORD (PTOL - 413)			
47	03/21/2008	DATE FORWARDED TO EXAMINER			
46	03/11/2008	SUPPLEMENTAL RESPONSE		151	42
45	11/20/2007	CHANGE IN POWER OF ATTORNEY (MAY INCLUDE ASSOCIATE POA)			
44	11/08/2007	CORRESPONDENCE ADDRESS CHANGE			
43	10/24/2007	DATE FORWARDED TO EXAMINER			
42	10/12/2007	RESPONSE AFTER NON-FINAL ACTION		2	40
41	10/18/2007	PG-PUB ISSUE NOTIFICATION			
40	07/10/2007	MAIL NON-FINAL REJECTION	25		32
39	07/06/2007	MAIL-PETITION DECISION - GRANTED			
38	10/24/2006	PETITION ENTERED			
37	07/04/2007	CORRESPONDENCE ADDRESS CHANGE			
36	04/30/2007	NON-FINAL REJECTION			
35	02/15/2007	INFORMATION DISCLOSURE STATEMENT CONSIDERED			
34.7	02/15/2007	INFORMATION DISCLOSURE STATEMENT (IDS)		0	32

		FILED			
34	02/15/2007	INFORMATION DISCLOSURE STATEMENT (IDS) FILED			
33	02/22/2007	DATE FORWARDED TO EXAMINER			
32	02/15/2007	RESPONSE TO ELECTION / RESTRICTION FILED		90	29
31	02/15/2007	REQUEST FOR EXTENSION OF TIME - GRANTED			
29	08/17/2006	MAIL RESTRICTION REQUIREMENT	469		-1
28	08/15/2006	REQUIREMENT FOR RESTRICTION / ELECTION			
27	08/10/2006	CORRESPONDENCE ADDRESS CHANGE			
26	08/10/2006	CORRESPONDENCE ADDRESS CHANGE			
25	08/10/2006	CHANGE IN POWER OF ATTORNEY (MAY INCLUDE ASSOCIATE POA)			
24	01/20/2006	IFW TSS PROCESSING BY TECH CENTER COMPLETE			
23	01/20/2006	CASE DOCKETED TO EXAMINER IN GAU			
22	11/10/2005	APPLICATION RETURN FROM OIPE			
21	11/14/2005	APPLICATION IS NOW COMPLETE			
20	10/12/2004	PAYMENT OF ADDITIONAL FILING FEE/PREEXAM			
19	11/10/2005	APPLICATION RETURN TO OIPE			
18	11/10/2005	APPLICATION RETURN FROM OIPE			
17	11/14/2005	APPLICATION IS NOW COMPLETE			
16	11/10/2005	APPLICATION RETURN TO OIPE			
15	11/09/2005	APPLICATION RETURN FROM OIPE			
14	11/10/2005	APPLICATION IS NOW COMPLETE			
13	11/09/2005	APPLICATION RETURN TO OIPE			
12	11/09/2005	APPLICATION DISPATCHED FROM OIPE			
11	11/09/2005	APPLICATION IS NOW COMPLETE			
9	10/12/2004	CRF DISK HAS BEEN RECEIVED BY PREEXAM / GROUP / PCT			
8	10/12/2004	A STATEMENT BY ONE OR MORE INVENTORS SATISFYING THE REQUIREMENT UNDER 35 USC 115, OATH OF THE APPLIC			
7	11/04/2005	CRF IS GOOD TECHNICALLY / ENTERED INTO DATABASE			
6	08/11/2004	NOTICE MAILED--APPLICATION INCOMPLETE--FILING DATE ASSIGNED			
5	04/05/2004	CLEARED BY OIPE CSR			
4	04/05/2004	CASE CLASSIFIED BY OIPE			

3	03/25/2004	IFW SCAN & PACR AUTO SECURITY REVIEW			
2	03/05/2004	CRF DISK HAS BEEN RECEIVED BY PREEXAM / GROUP / PCT			
1	03/05/2004	INITIAL EXAM TEAM NN			

Search Another: Application# Search

EXPLANATION OF PTA CALCULATION

EXPLANATION OF PTE CALCULATION

To go back, right click here and select Back. To go forward, right click here and select Forward. To refresh, right click here and select Refresh.

Back to OASIS | Home page

UNITED STATES PATENT AND TRADEMARK OFFICE

COMMISSIONER FOR PATENTS
UNITED STATES PATENT AND TRADEMARK OFFICE
P.O. BOX 1450
ALEXANDRIA, VA 22313-1450
www.uspto.gov

Paper No.

MAILED

MAR 17 2010

OFFICE OF PETITIONS

SEED INTELLECTUAL PROPERTY LAW GROUP PLLC
701 FIFTH AVE
SUITE 5400
SEATTLE WA 98104

In re Patent No. 7,592,158	: DECISION ON REQUEST FOR
Ruelle	: RECONSIDERATION OF
Issue Date: September 22, 2009	: PATENT TERM ADJUSTMENT
Application No. 10/794,784	: and
Filed: March 5, 2004	: NOTICE OF INTENT TO ISSUE
Atty Docket No.: 400077.402D1	: CERTIFICATE OF CORRECTION

This is a decision on the petition filed on November 18, 2009, which is being treated as a petition under 37 CFR 1.705(d) requesting that the patent term adjustment indicated on the above-identified patent be corrected to indicate that the term of the above-identified patent is extended or adjusted by one thousand, three hundred and nine (1309) days.

The petition to correct the patent term adjustment indicated on the above-identified patent to indicate that the term of the above-identified patent is extended or adjusted by one thousand, three hundred and nine (1309) days is **GRANTED**.

The Office acknowledges submission of the $200.00 fee set forth in 37 CFR 1.18(e). No additional fees are required.

The application is being forwarded to the Certificates of Branch for issuance of a certificate of correction. The Office will issue a certificate of correction indicating that the term of the above-identified patent is extended or adjusted by **one thousand, three hundred and nine (1309) days.**

Telephone inquiries specific to this matter should be directed to Senior Attorney Paul Shanoski at (571) 272-3225.

Nancy Johnson
Senior Petitions Attorney
Office of Petitions

Enclosure: Copy of DRAFT Certificate of Correction

UNITED STATES PATENT AND TRADEMARK OFFICE

CERTIFICATE OF CORRECTION

PATENT : 7,592,158 B2

DATED : **September 22, 2009** **DRAFT**

INVENTOR(S) : **Ruelle**

It is certified that error appears in the above-identified patent and that said Letters Patent is hereby corrected as shown below:

On the cover page,

[*] Notice: Subject to any disclaimer, the term of this patent is extended or adjusted under 35 USC 154(b) by 840 days

Delete the phrase "by 840 days" and insert – by 1309 days --

SPE RESPONSE FOR CERTIFICATE OF CORRECTION

Paper No.: _____

DATE : 10/12/06

TO SPE OF : ART UNIT 2816

SUBJECT : Request for Certificate of Correction for Appl. No.: **10/794788** Patent No.: **7053678**

Please respond to this request for a certificate of correction within 7 days.

Please review the requested changes/corrections as shown in the **COCIN** document(s) in the IFW application image. No new matter should be introduced, nor should the scope or meaning of the claims be changed.

Please complete the response (see below) and forward the completed response to scanning using document code **COCX**.

Angela Green
Certificates of Correction Branch
703.308.9380 ext. 123

Thank You For Your Assistance

The request for issuing the above-identified correction(s) is hereby:
Note your decision on the appropriate box.

- ☒ **Approved** — **All** changes apply.
- ☐ **Approved in Part** — Specify below which changes **do not** apply.
- ☐ **Denied** — State the reasons for denial below.

Comments: Changes requested by applicant are acceptable

SPE

2821
Art Unit

UNITED STATES PATENT AND TRADEMARK OFFICE

Commissioner for Patents
United States Patent and Trademark Office
P.O. Box 1450
Alexandria, VA 22313-1450
www.uspto.gov

Paul L. Marshall
Delphi Technologies, Inc.
P.O. Box 5052
M/C 480-410-202
Troy, MI 48007

COPY MAILED

SEP 0 5 2006

OFFICE OF PETITIONS

In re Application of Moroz et al. :
Application No. 10/794,789 :
Filing Date: March 5, 2004 :
Attorney Docket No. DP-310650 :

Decision on Petition

This is a decision on the petition under 37 CFR 1.182 filed December 2, 2005.

The petition is **granted**.

Facts:

A signed declaration was filed July 28, 2004.

The declaration listed the names of five inventors:
(1) Moroz Boris L'vovich,
(2) Karl C. Kharas,
(3) Mikhail Yurievich Smirnov,
(4) Bobrin Alexander, and
(5) Valerii Ivanovich Bukhtlyarov.

The declaration listed the correct individuals but used incorrect names.

The petition requests the names of the inventors be changed to:
(1) Boris L'vovich Moroz,
(2) Karl C. Kharas
(3) Mikhail Yurievich Smirnov,
(4) Alexander Sergeevich Bobrin, and
(5) Valerii Ivanovich Bukhtlyarov.

Discussion:

MPEP 605.04(b) states,

> Except for correction of a typographical or transliteration error in the spelling of an inventor's name, a request to have the name changed from the typewritten version to the

> signed version or any other corrections in the name of the inventor(s) will not be entertained, unless accompanied by a petition under 37 CFR 1.182 together with an appropriate petition fee. Since amendments are not permitted after the payment of the issue fee (37 CFR 1.312), a petition under 37 CFR 1.182 to change the name of the inventor cannot be granted if filed after the payment of the issue fee.

Petitioner has filed a petition under 37 CFR 1.182 to correct the inventors' names. The petition has been filed prior to payment of an issue fee. Therefore, the petition is granted.

Telephone inquiries regarding this communication should be directed to Petitions Attorney Steven Brantley at (571) 272-3203.

Charles Steven Brantley
Senior Petitions Attorney
Office of Petitions

Attached: Corrected Filing Receipt

UNITED STATES PATENT AND TRADEMARK OFFICE

UNITED STATES DEPARTMENT OF COMMERCE
United States Patent and Trademark Office
Address: COMMISSIONER FOR PATENTS
P.O. Box 1450
Alexandria, Virginia 22313-1450
www.uspto.gov

APPL NO.	FILING OR 371 (c) DATE	ART UNIT	FIL FEE REC'D	ATTY.DOCKET NO	DRAWINGS	TOT CLMS	IND CLMS
10/794,789	03/05/2004	1764	954	DP-310650	6	23	2

CONFIRMATION NO. 5825
CORRECTED FILING RECEIPT
OC000000020230141
OC000000020230141

Paul L. Marshall
Delphi Technologies, Inc.
P.O. Box 5052
M/C 480-410-202
Troy, MI 48007

Date Mailed: 08/29/2006

Receipt is acknowledged of this regular Patent Application. It will be considered in its order and you will be notified as to the results of the examination. Be sure to provide the U.S. APPLICATION NUMBER, FILING DATE, NAME OF APPLICANT, and TITLE OF INVENTION when inquiring about this application. Fees transmitted by check or draft are subject to collection. Please verify the accuracy of the data presented on this receipt. **If an error is noted on this Filing Receipt, please mail to the Commissioner for Patents P.O. Box 1450 Alexandria Va 22313-1450. Please provide a copy of this Filing Receipt with the changes noted thereon. If you received a "Notice to File Missing Parts" for this application, please submit any corrections to this Filing Receipt with your reply to the Notice. When the USPTO processes the reply to the Notice, the USPTO will generate another Filing Receipt incorporating the requested corrections (if appropriate).**

Applicant(s)

Boris L'vovich Moroz, Novosibirsk, RUSSIAN FEDERATION;
Karl C. Kharas, Tulsa, OK;
Mikhail Yurievich Smirnov, Novosibirsk, RUSSIAN FEDERATION;
Alexander Sergeevich Bobrin, Novosibirsk, RUSSIAN FEDERATION;
Valerii Ivanovich Bukhtlyarov, Novosibirsk, RUSSIAN FEDERATION;

Power of Attorney:
Joel Charlton--52721

Domestic Priority data as claimed by applicant

Foreign Applications
If Required, Foreign Filing License Granted: 05/25/2004

The country code and number of your priority application, to be used for filing abroad under the Paris Convention, is
US10/794,789

Projected Publication Date: Not Applicable

Non-Publication Request: No

Early Publication Request: No

Title

Exhaust treatment system and catalyst system

Preliminary Class

422

PROTECTING YOUR INVENTION OUTSIDE THE UNITED STATES

Since the rights granted by a U.S. patent extend only throughout the territory of the United States and have no effect in a foreign country, an inventor who wishes patent protection in another country must apply for a patent in a specific country or in regional patent offices. Applicants may wish to consider the filing of an international application under the Patent Cooperation Treaty (PCT). An international (PCT) application generally has the same effect as a regular national patent application in each PCT-member country. The PCT process **simplifies** the filing of patent applications on the same invention in member countries, but **does not result** in a grant of "an international patent" and does not eliminate the need of applicants to file additional documents and fees in countries where patent protection is desired.

Almost every country has its own patent law, and a person desiring a patent in a particular country must make an application for patent in that country in accordance with its particular laws. Since the laws of many countries differ in various respects from the patent law of the United States, applicants are advised to seek guidance from specific foreign countries to ensure that patent rights are not lost prematurely.

Applicants also are advised that in the case of inventions made in the United States, the Director of the USPTO must issue a license before applicants can apply for a patent in a foreign country. The filing of a U.S. patent application serves as a request for a foreign filing license. The application's filing receipt contains further information and guidance as to the status of applicant's license for foreign filing.

Applicants may wish to consult the USPTO booklet, "General Information Concerning Patents" (specifically, the section entitled "Treaties and Foreign Patents") for more information on timeframes and deadlines for filing foreign patent applications. The guide is available either by contacting the USPTO Contact Center at 800-786-9199, or it can be viewed on the USPTO website at http://www.uspto.gov/web/offices/pac/doc/general/index.html.

For information on preventing theft of your intellectual property (patents, trademarks and copyrights), you may wish to consult the U.S. Government website, http://www.stopfakes.gov. Part of a Department of Commerce initiative, this website includes self-help "toolkits" giving innovators guidance on how to protect intellectual property in specific countries such as China, Korea and Mexico. For questions regarding patent enforcement issues, applicants may call the U.S. Government hotline at 1-866-999-HALT (1-866-999-4158).

LICENSE FOR FOREIGN FILING UNDER
Title 35, United States Code, Section 184
Title 37, Code of Federal Regulations, 5.11 & 5.15

GRANTED

The applicant has been granted a license under 35 U.S.C. 184, if the phrase "IF REQUIRED, FOREIGN FILING LICENSE GRANTED" followed by a date appears on this form. Such licenses are issued in all applications where the conditions for issuance of a license have been met, regardless of whether or not a license may be required as set forth in 37 CFR 5.15. The scope and limitations of this license are set forth in 37 CFR 5.15(a) unless an earlier license has been issued under 37 CFR 5.15 (b). The license is subject to revocation upon written notification. The date indicated is the effective date of the license, unless an earlier license of similar scope has been granted under 37 CFR 5.13 or 5.14.

This license is to be retained by the licensee and may be used at any time on or after the effective date thereof unless it is revoked. This license is automatically transferred to any related applications(s) filed under 37 CFR 1.53(d). This license is not retroactive.

The grant of a license does not in any way lessen the responsibility of a licensee for the security of the subject matter as imposed by any Government contract or the provisions of existing laws relating to espionage and the national security or the export of technical data. Licensees should apprise themselves of current regulations especially with respect to certain countries, of other agencies, particularly the Office of Defense Trade Controls, Department of State (with respect to Arms, Munitions and Implements of War (22 CFR 121-128)); the Bureau of Industry and Security, Department of Commerce (15 CFR parts 730-774); the Office of Foreign Assets Control, Department of Treasury (31 CFR Parts 500+) and the Department of Energy.

NOT GRANTED

No license under 35 U.S.C. 184 has been granted at this time, if the phrase "IF REQUIRED, FOREIGN FILING LICENSE GRANTED" DOES NOT appear on this form. Applicant may still petition for a license under 37 CFR 5.12, if a license is desired before the expiration of 6 months from the filing date of the application. If 6 months has lapsed from the filing date of this application and the licensee has not received any indication of a secrecy order under 35 U.S.C. 181, the licensee may foreign file the application pursuant to 37 CFR 5.15(b).

UNITED STATES PATENT AND TRADEMARK OFFICE

Commissioner for Patents
United States Patent and Trademark Office
P.O. Box 1450
Alexandria, VA 22313-1450
www.uspto.gov

WILLIAM B. PATTERSON
MOSER, PATTERSON & SHERIDAN, L.L.P.
Suite 1500
3040 Post Oak Blvd.
Houston TX 77056

COPY MAILED
JUN 0 6 2006
OFFICE OF PETITIONS

In re Application of	:
BERND-GEORG PIETRAS, et al.	:
Application No. 10/794,795	: DECISION ON PETITION
Filed: March 5, 2004	: UNDER 37 CFR 1.78(a)(3)
Attorney Docket No. WEAT/0357	: and 37 CFR 1.55(c)

This is a decision on the petition treated under 37 CFR 1.78(a)(3) and 37 CFR 1.55(c), filed August 29, 2005, to accept an unintentionally delayed claim under 35 U.S.C. § 120 for the benefit of priority to the prior-filed nonprovisional applications, and under 35 U.S.C. § 119(a)-(d) for the benefit of priority to a prior-filed foreign application, set forth in the amendment filed with the petition.

The petition is **DISMISSED**.

As to the benefit claim under 37 CFR 1.78(a)(3):

A petition for acceptance of a claim for late priority under 37 CFR 1.78(a)(3) is only applicable to those applications filed on or after November 29, 2000. Further, the petition is appropriate only after the expiration of the period specified in 37 CFR 1.78(a)(2)(ii). In addition, the petition under 37 CFR 1.78(a)(3) must be accompanied by:

(1) the reference required by 35 U.S.C. § 120 and 37 CFR 1.78(a)(2)(i) of the prior-filed application, unless previously submitted;
(2) the surcharge set forth in § 1.17(t); and
(3) a statement that the entire delay between the date the claim was due under 37 CFR 1.78(a)(2)(ii) and the date the claim was filed was unintentional. The Director may require additional information where there is a question whether the delay was unintentional.

The petition does not satisfy item (1) above.

The reference to add the above-noted, prior-filed applications on page one following the first paragraph claiming benefit to the provisional application in the specification is not acceptable as drafted since it improperly incorporates by reference the prior-filed applications. An incorporation by reference statement added after an application's filing date is not effective because no new matter can be added to an application after its filing date (*see* 35 U.S.C. § 132(a)). If an incorporation by reference statement is included in an amendment to the specification to add a benefit claim under 35 U.S.C. § 120 after the filing date of the application, the amendment would not be proper. When a benefit claim under 35 U.S.C. § 120 is submitted after the filing of an application, the reference to the prior application cannot include an incorporation by reference statement of the prior application. *See* Dart Industries v. Banner, 636 F.2d 684, 207 USPQ 273 (C.A.D.C. 1980). *Note* MPEP §§ 201.06(c) and 608.04(b).

Before the petition under 37 CFR § 1.78(a)(3) can be granted, a renewed petition and either an Application Data Sheet or a substitute amendment (complying with the provisions of 37 CFR 1.121 and 37 CFR 1.76(b)(5)) to correct the above matters are required.

As to the benefit claim under 37 CFR 1.55(c):

A petition under 37 CFR 1.55(c) to accept an unintentionally delayed claim for priority requires:

(1) The nonprovisional application claiming the benefit of an earlier filing date must be filed on or after November 29, 2000;

(2) the claim submitted with the petition must identify the prior foreign application for which priority is claimed, as well as any foreign application for the same subject matter and having a filing date before that of the application for which priority is claimed, by the application number, country, and the filing date, **and be included either in an oath or declaration (37 CFR 1.63(c)(2)) or in an Application Data Sheet (37 CFR 1.76(b)(6);**

(3) the surcharge as set forth in 37 CFR 1.17(t);

(4) a statement that the entire delay between the date the claim was due under 37 CFR 1.55(a)(1) and the date the claim was filed was unintentional. (The Director may require additional information where there is a question whether the delay was unintentional); and

(5) the above-identified nonprovisional application must be filed within 12 months of the filing date of the foreign application.

The petition fails to comply with item (2) above. In this regard, a review of the file record fails to disclose that the priority information was included in an oath or declaration or in an Application Data Sheet (ADS) in accordance with 37 CFR 1.76(b)(6). Unless provided in an ADS, 37 CFR 1.63(c)(2) requires that the oath or declaration must identify the foreign application for patent (or inventor's certificate) for which priority is claimed under 37 CFR 1.55, and any foreign application having a filing date before that of the application on which priority is

claimed, by specifying the application number, country, day, month, and year of its filing. Note MPEP 201.14.

In view of the above, compliance with 37 CFR 1.63(c)(2) or 37 CFR 1.76(b)(6) must be satisfied if applicant desires to claim priority to the foreign application noted in the petition. Any future petition should include a cover letter and be entitled "Renewed Petition under 37 CFR 1.55(c)."

It is noted in reviewing the chain of applications to which applicant is seeking a claim for priority, it appears from Office database computer records that some of the applications in the amendment do not make a reference to the prior-filed applications. Where an application claims a benefit under 35 U.S.C. 120 of a chain of applications, the application must make a reference to the first (earliest) application and every intermediate application. See Sampson v. Ampex Corp., 463 F.2d 1042, 1044 45, 174 USPQ 417, 418 19 (2d Cir. 1972); Sticker Indus. Supply Corp. v. Blaw Knox Co., 405 F.2d 90, 93, 160 USPQ 177, 179 (7th Cir. 1968); Hovlid v. Asari, 305 F.2d 747, 751, 134 USPQ 162, 165 (9th Cir. 1962). See also MPEP § 201.11. In addition, every intermediate application must also make a reference to the first (earliest) application and every application after the first application and before such intermediate application. MPEP Section 201.06(d).

Further correspondence with respect to this matter should be addressed as follows:

By mail: Mail Stop PETITIONS
Commissioner for Patents
Post Office Box 1450
Alexandria, VA 22313-1450

By hand: Customer Service Window
Mail Stop Petitions
Randolph Building
401 Dulany Street
Alexandria, VA 22314

By fax: (571) 273-8300
ATTN: Office of Petitions

Any questions concerning this matter may be directed to Amelia Au at (571) 272-7414.

Frances Hicks
Lead Petitions Examiner
Office of Petitions

UNITED STATES PATENT AND TRADEMARK OFFICE

Commissioner for Patents
United States Patent and Trademark Office
P.O. Box 1450
Alexandria, VA 22313-1450
www.uspto.gov

FOLEY HOAG, LLP
PATENT GROUP, WORLD TRADE CENTER WEST
155 SEAPORT BLVD
BOSTON MA 02110

MAILED

JUN 01 2010

OFFICE OF PETITIONS

In re Application of	:	
SCHWARZ, Alexander et al.	:	
Application No. 10/794,804	:	DECISION ON PETITION
Filed: March 05, 2004	:	TO WITHDRAW
Attorney Docket No. **PMX-114.01**	:	FROM RECORD

This is a decision on the Request to Withdraw as attorney or agent of record under 37 C.F.R. § 1.36(b), filed April 27, 2010.

The request is **NOT APPROVED.**

The Office will no longer accept address changes to a new practitioner or law firm filed with a Request, absent the filing of a power of attorney to the new representative. The Office will either change the correspondence address of record to the most current address information provided for the assignee of the entire interest who properly became of record under 37 CFR 3.71 or, if no assignee of the entire interest has properly been made of record under 37 CFR 3.71, the most current address information provided for the first named inventor.

Accordingly, the request to withdraw from record cannot be approved because the request to change the correspondence address is not that of: (1) the first named inventor; or (2) an assignee of the entire interest under 37 C.F.R 3.71 who has properly intervened.

If an assignee has intervened in this application, then an updated Statement under 37 CFR 3.73(b) or a copy of the actual assignment must be submitted with a renewed request.

All future communications from the Office will continue to be directed to the above-identified address until otherwise properly notified.

Telephone inquiries concerning this decision should be directed to the undersigned at 571-272- 4618.

/Tredelle D. Jackson/

Tredelle D. Jackson
Paralegal Specialist
Office of Petitions

SPE RESPONSE FOR CERTIFICATE OF CORRECTION

Paper No.: _____

DATE : June 18, 2007

TO SPE OF : ART UNIT 3676

SUBJECT : Request for Certificate of Correction for Appl. No. 10/794816 patent no.7198305

Please respond to this request for a certificate of correction within 7 days.

Please review the requested changes/corrections as shown in the **COCIN** document(s) in the IFW application image. No new matter should be introduced, nor should the scope or meaning of the claims be changed.

Please complete the response (see below) and forward the completed response to scanning using document code **COCX**.

Magdalene Talley

Certificates of Correction Branch

703-308-9390 ext. 116

Thank You For Your Assistance

The request for issuing the above-identified correction(s) is hereby:

Note your decision on the appropriate box.

XXXXXXXX ☒ **Approved** — **All** changes apply.

☐ **Approved in Part** — Specify below which changes **do not** apply.

☐ **Denied** — State the reasons for denial below.

Comments: All changes are approved.

/Jennifer H Gay/ — **SPE**

3676 — **Art Unit**

UNITED STATES PATENT AND TRADEMARK OFFICE

COMMISSIONER FOR PATENTS
UNITED STATES PATENT AND TRADEMARK OFFICE
P.O. BOX 1450
ALEXANDRIA, VA 22313-1450
www.uspto.gov

Mr. Marvin J. Hale Jr.
13917 Farr Drive
Sterling Heights, MI 48312

COPY MAILED

NOV 19 2004

OFFICE OF PETITIONS

In re Application of	:	
Hale	:	ON PETITION
Application No. 10/794,821	:	
Filing Date: March 8, 2004	:	
For: GAME STICK AND BALL	:	

This is a decision on the "PETITION FOR ALLOWANCE OF FILING DATE," filed October 28, 2004, wherein petitioner requests the above-identified application be accorded a filing date of March 8, 2004.

The application was received by the USPTO on March 8, 2004. On October 1, 2004, a Notice of Incomplete Nonprovisional Application ("Notice") was mailed indicating that the application had not been accorded a filing date because the application appeared to have been submitted without drawings as required by under 35 USC 113 (first sentence).

The Notice indicated that the filing date would be the date of receipt of all items required. Any assertions that the item(s) required below were submitted, or are not necessary for a filing date, must be by way of petition.

Petitioner argues that the application as filed included a fee transmittal form, an application data sheet, specification, drawing, declaration, check for the filing fee, certification of mailing and application transmittal form.

Petitioner has included an affidavit wherein he states that the application as filed included drawings and that he personally mailed the envelope containing the application papers via the U.S. Postal Service.

Petitioner has also included the affidavit of Ramon D. Foltz who states that he observed and participated in the placement of the application papers, including drawings, in an envelope that was addressed to Mail Stop Patents, Director, P.O. Box

1450, Alexandria, Virginia 22313-1450 and that to the best of his recollection, knowledge and belief, the envelope contained all of the application papers, including drawings.

The arguments and evidence submitted by petitioner has been considered, but are not persuasive. The USPTO file is the official record of the papers originally filed in this application. An applicant alleging that a paper was filed in the Office and later misplaced has the burden of proving the allegation by a preponderance of the evidence.

The affidavits of petitioner and Mr. Foltz rely upon the affiants' recall of routine events that occurred more than seven months earlier and are not more persuasive than the record of what was filed as shown in the official file. Accordingly, the fact that petitioner and Mr. Foltz believe drawings were deposited with the application papers is not more persuasive than the actual papers shown to have been received by the official file.

The Office has a well established and well publicized practice of providing a receipt for papers filed in the Office to any applicant desiring a receipt. The practice requires that any paper for which a receipt is desired be filed in the Office with a self-addressed postcard identifying the paper. A postcard receipt that itemizes and properly identifies the papers that are being filed serves as *prima facie* evidence of receipt in the Office of all the items listed thereon on the date stamped thereon by the Office. See section 503, Manual Of Patent Examining Procedure (MPEP 503).

Petitioner has provided no evidence, such as a date-stamped return postcard, to substantiate his claim that the application papers as filed included drawings. Thus, it is concluded that, as set forth in the Notice, drawings were omitted from the application as filed.

For the reasons set forth herein, the application is entitled to a filing date of March 8, 2004 without drawings as part of the original disclosure. Accordingly, the petition to accord the instant application a filing date of March 8, 2004 is hereby **GRANTED**.

Any petition for reconsideration of this decision must be submitted within **TWO (2) MONTHS** of the mail date of this decision. If petitioner desires to have the drawings submitted October 28, 2004 entered into the record, a petition for

reconsideration requesting the later filing date of October 28, 2004 (date of submission of the omitted items) and entry of Figures 1 through 5 must be submitted within **TWO (2) MONTHS** of the mail date of this decision. The time period for requesting reconsideration may not be extended pursuant to 37 CFR 1.136. (37 CFR 1.181(f)).

This application will be returned to the Office of Initial Patent Examination with a filing date of March 8, 2004 **without** entry of Figures 1 through 5 as part of the disclosure. Petitioner should file a preliminary amendment canceling reference to Figures 1 through 5 prior to the issuance of the first Office action on the merits.

Further correspondence with respect to this matter should be addressed as follows:

By mail:	**Mail Stop Petition** Commissioner for Patents P.O. Box 1450 Alexandria, VA 22313-1450
By facsimile:	(703) 872-9306
By hand or delivery: service(FedEx, UPS, DHL, etc.)	U.S. Patent and Trademark Office 220 20th Street S. Customer Window, **Mail Stop Petition** Crystal Plaza Two, Lobby, Room 1B03 Arlington, VA 22202

This application file is being forwarded to the Office of Initial Patent Examination for further processing with a filing date of October 28, 2004 without entry of Figures 1 through 5.

Telephone inquiries related to this decision may be directed to the undersigned at (571) 272-3205.

Alesia M. Brown
Senior Petitions Attorney
Office of Petitions

UNITED STATES PATENT AND TRADEMARK OFFICE

COMMISSIONER FOR PATENTS
UNITED STATES PATENT AND TRADEMARK OFFICE
P.O. BOX 1450
ALEXANDRIA, VA 22313-1450
www.uspto.gov

RAMON D. FOLTZ P.L.L.C.
13863 TIMERWYCK DRIVE
SHELBY TOWNSHIP, MI 48315-2410

COPY MAILED

MAR 16 2005

OFFICE OF PETITIONS

In re Application of :
Hale : ON PETITION
Application No. 10/794,821 :
Filing Date: October 28, 2004 :
For: GAME STICK AND BALL :

This is a decision on the "Petition for Reconsideration," filed January 19, 2005, wherein petitioner has expressly requests that drawings sheets one through five be entered into the above-identified application and that the application be accorded a later filing date of October 28, 2004, the date that drawing sheets one through five were submitted.

The application was received by the USPTO on March 8, 2004. On October 1, 2004, a Notice of Incomplete Nonprovisional Application ("Notice") was mailed indicating that the application had not been accorded a filing date because the application appeared to have been submitted without drawings as required by under 35 USC 113 (first sentence).

The Notice indicated that the filing date would be the date of receipt of all items required. Any assertions that the item(s) required below were submitted, or are not necessary for a filing date, must be by way of petition.

A petition was submitted October 28, 2004. The petition argued that the application as filed included a fee transmittal form, an application data sheet, specification, drawing, declaration, check for the filing fee, certification of mailing and application transmittal form. Petitioner, however, failed to establish that the application as filed include any drawings. Accordingly, the application was accorded a filing date of March 8, 2004 without entry of the drawings into the record.

Upon petition for reconsideration, petitioner seeks accordance of a later filing date of October 28, 2004 and entry of the drawing sheets.

The petition is hereby **GRANTED**.

This application is being forwarded to the Office of Initial Patent Examination for further processing with a filing date of October 28, 2004 and entry of the drawings into the application.

Telephone inquiries related to this decision may be directed to the undersigned at (571) 272-3205.

Alesia M. Brown
Petitions Attorney
Office of Petitions

UNITED STATES PATENT AND TRADEMARK OFFICE

COMMISSIONER FOR PATENTS
UNITED STATES PATENT AND TRADEMARK OFFICE
P.O. BOX 1450
ALEXANDRIA, VA 22313-1450
www.uspto.gov

JOHN E. VANDIGRIFF
906 STONE CIRCLE LN
LEWISVILLE, TX 75056

COPY MAILED

MAR 16 2007

OFFICE OF PETITIONS

In re Application of	:	
Roger Hennen	:	
Application No. 10/794,827	:	ON PETITION
Filed: March 8, 2004	:	
Attorney Docket No. HEN101	:	

This is a decision on the petition under 37 CFR 1.137(b), filed October 16, 2006, to revive the above-identified application.

The petition is **GRANTED**.

The application became abandoned for failure to timely file a reply within the meaning of 37 CFR 1.113 to the final Office action of October 26, 2005. A Notice of Abandonment was mailed on June 23, 2006. In response, on October 16, 2006, the present petition was filed.

The petition satisfies the requirements of 37 CFR 1.137(b) in that petitioner has supplied (1) the reply in the form of a Request for Continued Examination (RCE), including the fee of $395 and the submission required by 37 CFR 1.114; (2) the petition fee of $750; and (3) a proper statement of unintentional delay.

This application is being referred to Technology Center AU 3725 for processing of the RCE and for appropriate action by the Examiner in the normal course of business on the amendment submitted in accordance with 37 CFR 1.114.

Telephone inquiries concerning this decision should be directed to the undersigned at (571) 272-3204. Inquiries relating to further prosecution should be directed to the Technology Center.

Sherry D. Brinkley
Petitions Examiner
Office of Petitions

UNITED STATES PATENT AND TRADEMARK OFFICE

Commissioner for Patents
United States Patent and Trademark Office
P.O. Box 1450
Alexandria, VA 22313-1450
www.uspto.gov

CHARLES E. BAXLEY, ESQ.
90 JOHN STREET
THIRD FLOOR
NEW YORK NY 10038

COPY MAILED
MAY 2 6 2005
OFFICE OF PETITIONS

In re Application of
Shuei-Lin Shen
Application No. 10/794,834
Filed: March 3, 2004
Attorney Docket No. 14267 B

DECISION ON PETITION

This is a decision on the petition under 37 CFR 1.137(a) filed April 18, 2005. Upon further review of the record, the petition is being treated as a request to withdraw the holding of abandonment of the above-identified application.

This application was held abandoned for failure to respond in a timely manner to the nonfinal Office action mailed on July 20, 2004. A Notice of Abandonment was mailed on March 25, 2004. Petitioner asserts that petitioner filed a timely and proper response in the form of an amendment; however, the application number in the heading of the response identified application No. "10/794,836" rather than the intended application No. "10/794,834."

The amendment and a request for a one-month extension of time to reply were located in the file of application No. 10/794,836. A review of the correspondence indicates that they were received in the United States Patent and Trademark Office (Office) on November 22, 2004 (certificate of mailing dated November 17, 2004), and again on January 31, 2005, but were not matched with the file due to the incorrect application number.

Under current Office procedure, a response that has an incorrect application number is handled in accordance with MPEP Section 502. If a paper having an incorrect application number contains sufficient information to identify the correct application and was timely received at the Office, the holding of abandonment will be withdrawn. In reviewing the papers, it is concluded that there was sufficient information thereon to associate the papers with the present application file.

For the reasons stated above, the Notice of Abandonment is hereby withdrawn and the application is returned to pending status.

The petition is **GRANTED**.

The amendment, the request for a one-month extension of time, and all related communications submitted on November 22, 2004, and January 31, 2005, will be "closed" in the Image File Wrapper for application No. 10/794,836, and will be scanned into the Image File Wrapper for application No. 10/794,834.

No fee is required for a petition to withdraw the holding of abandonment. Therefore, the $250.00 petition fee will be credited to petitioner's Deposit Account No. 02-1435. Additionally, the Office finance records indicate that two fees for an extension of time within one month were paid in application No. 10/794,836, in the amounts of $55.00 and $60.00. The $55.00 extension of time fee will be transferred to application No. 10/794,834. The additional $60.00 extension of time fee is unnecessary and will be credited to petitioner's Deposit Account.

The matter is being referred to Technology Center Art Unit 3671.

Telephone inquiries should be directed to the undersigned at (571) 272-3211.

Christina Tartera Donnell

Christina Tartera Donnell
Senior Petitions Attorney
Office of Petitions

UNITED STATES PATENT AND TRADEMARK OFFICE

COMMISSIONER FOR PATENTS
UNITED STATES PATENT AND TRADEMARK OFFICE
P.O. BOX 1450
ALEXANDRIA, VA 22313-1450
www.uspto.gov

JUN 30 2004

TOWNSEND AND TOWNSEND AND CREW, LLP
TWO EMBARCADERO CENTER
EIGHTH FLOOR
SAN FRANCISCO CA 94111-3834

In re Application of	:
Dennis Lee Murphy et al	:
Serial No.: 10/794,849	: PETITION TO MAKE SPECIAL
Filed: March 4, 2004	:
Attorney Docket No.: 018794-013400	:

This is in response to applicants' petition filed June 9, 2004, to make the above-identified application special under the provisions of 37 CFR 1.102(c), based on the age of the applicant.

Applicant has satisfied the provisions set forth in M.P.E.P. 708.02, IV. Therefor the petition is **GRANTED**.

The application will be forwarded to the examiner for action on the merits commensurate with this decision.

Should there be any questions with regard to this letter please contact William R. Dixon, Jr. by letter addressed to the Director, Technology Center 1600, PO BOX 1450, ALEXANDRIA, VA 22313-1450, or by telephone at 571-272-0519 or by facsimile transmission to the general Office facsimile number 703-872-9306.

William R. Dixon, Jr.
Special Program Examiner
Technology Center 1600

UNITED STATES PATENT AND TRADEMARK OFFICE

COMMISSIONER FOR PATENTS
UNITED STATES PATENT AND TRADEMARK OFFICE
P.O. BOX 1450
ALEXANDRIA, VA 22313-1450
www.uspto.gov

MAILED

SEP 2 8 2005

Technology Center 2100

Chun-Pok Leung
TOWNSEND and TOWNSEND and CREW LLP
Two Embarcadero Center, 8th Floor
San Francisco, California 94111-3834

In re Application of:
Nobuyuki SAIKA et al
Application No. 10/794,856
Filed: March 5, 2004
For: BACKUP SYSTEM AND METHOD

DECISION ON PETITION
TO MAKE SPECIAL

This is a decision on the petition, filed on July 25, 2005 under 37 C.F.R. §102(d) and M.P.E.P. § 708.02(VIII): Accelerated Examination, to make the above-identified application special.

The petition is **GRANTED**.

M.P.E.P. § 708.02, Section VIII which sets out the prerequisites for a grantable petition for Accelerated Examination under 37 C.F.R. § 102(d) states in relevant part:

> A new application (one which has not received any examination by the examiner) may be granted special status provided that applicant (and this term includes applicant's attorney or agent) complies with each of the following items:
>
> (A) Submits a petition to make special accompanied by the fee set forth in 37 CFR 1.17(h);
>
> (B) Presents all claims directed to a single invention, or if the Office determines that all the claims presented are not obviously directed to a single invention, will make an election without traverse as a prerequisite to the grant of special status;
>
> (C) Submits a statement(s) that a pre-examination search was made, listing the field of search by class and subclass, publication, Chemical Abstracts, foreign patents, etc. A search made by a foreign patent office satisfies this requirement;
>
> (D) Submits one copy each of the references deemed most closely related to the subject matter encompassed by the claims if said references are not already of record; and
>
> (E) Submits a detailed discussion of the references, which discussion points out, with the particularity required by 37 CFR 1.111 (b) and (c), how the claimed subject matter is patentable over the references.
>
> In those instances where the request for this special status does not meet all the prerequisites set forth above, applicant will be notified and the defects in the request will be stated. The application will remain in the status of a new application awaiting action in its regular turn. In those instances where a request is defective in one or more respects, applicant will be given one

> opportunity to perfect the request in a renewed petition to make special. If perfected, the request will then be granted. If not perfected in the first renewed petition, any additional renewed petitions to make special may or may not be considered at the discretion of the Group Special Program Examiner.

Applicant's submission of July 25, 2005 meets all the criteria set out above. Accordingly, the petition is **GRANTED**. The application file is being forwarded to the Examiner for accelerated examination in accordance with M.P.E.P. § 708.02. If the application is subsequently allowed, it will be given priority for printing. See M.P.E.P. § 1309.

Vincent N. Trans
Special Program Examiner
Technology Center 2100
Computer Architecture, Software, and
Information Security
571-272-3613

UNITED STATES PATENT AND TRADEMARK OFFICE

Commissioner for Patents
United States Patent and Trademark Office
P.O. Box 1450
Alexandria, VA 22313-1450
www.uspto.gov

COPY MAILED

JUN 09 2006

OFFICE OF PETITIONS

JOAQUIN SUFUENTES
3055 NW RIO VISTA TERRACE
PORTLAND, OR 97210

In re Application of :
Joaquin Sufuentes :
Application No. 10/794,859 : ON PETITION
Filed: March 8, 2004 :
Attorney Docket No.

This is a decision on the petition under 37 CFR 1.181 filed on March 21, 2005, to withdraw the holding of abandonment.

The petition is **DISMISSED**.

The application became abandoned on August 26, 2004, after no response was received to the Notice to File Corrected Application Papers mailed June 25, 2004, which set a shortened period for reply of two-months from its mailing date. No response was received within the allowable period, and the application became abandoned on August 26, 2004. A Notice of Abandonment was mailed on March 11, 2005.

In the instant petition, petitioner maintains that the Notice to File Corrected Application Papers was never received.

When, as in this case petitioner is arguing that an Office communication was not received, petitioner must establish non-receipt of the Office communication in accordance with section 711.03(c) of the *Manual of Patent Examining Procedure* that requires the following:

> [t]he showing requires to establish non-receipt of an Office communication must include a statement from the practitioner stating that the Office communication was not received by the practitioner and attesting to the fact that a search of the file jacket and docket records indicates that the Office communication was not received. A copy of the docket record where the non-received Office communication would have been entered had it been received and docketed must be attached to and referenced in practitioner's statement.

Although petitioner has offered a statement that petitioner's records where searched, but the Office communication was not found, petitioner did not provide a copy of petitioner's logs showing where the Office communication would have been entered if it had been received. If petitioner does not keep a log, petitioner may file a copy of the contents of the incoming correspondence petitioner has received for this application. Petitioner may also file a copy of

any calendar notations petitioner maintains relative to this patent application that may corroborate petitioner's allegation that the notice was not received. This documentation must accompany any renewed petition filed under 37 CFR 1.181(a).

Alternatively, petitioner may revive the application based on unintentional abandonment under 37 CFR 1.137(b) (enclosed). A grantable petition pursuant to 37 CFR 1.137(b) must be accompanied by the required reply, the required petition fee ($1,500.00 for a large entity and $750.00 for a verified small entity), and a statement that the **entire** delay in filing the required reply from the due date for the reply until the filing of a grantable petition pursuant to 37 CFR 1.137(b) was unintentional.

Further correspondence with respect to this matter should be addressed as follows:

By mail: Commissioner for Patents
United States Patent and Trademark Office
Box 1450
Alexandria, VA 22313-1450

By facsimile: (571) 273-8300
Attn: Office of Petitions

Telephone inquiries concerning this decision should be directed to the undersigned (571) 272-3222.

Kenya A. McLaughlin
Petitions Attorney
Office of Petitions

Enclosure: Form PTO/SB/64

PTO/SB/64 (10-05)
Approved for use through 07/31/2006. OMB 0651-0031
U.S. Patent and Trademark Office; U.S. DEPARTMENT OF COMMERCE
Under the Paperwork Reduction Act of 1995, no persons are required to respond to a collection of information unless it displays a valid OMB control number.

PETITION FOR REVIVAL OF AN APPLICATION FOR PATENT ABANDONED UNINTENTIONALLY UNDER 37 CFR 1.137(b)

Docket Number (Optional)

First named inventor:

Application No.: Art Unit:

Filed: Examiner:

Title:

Attention: Office of Petitions
Mail Stop Petition
Commissioner for Patents
P.O. Box 1450
Alexandria, VA 22313-1450
FAX (571) 273-8300

NOTE: If information or assistance is needed in completing this form, please contact Petitions Information at (571) 272-3282.

The above-identified application became abandoned for failure to file a timely and proper reply to a notice or action by the United States Patent and Trademark Office. The date of abandonment is the day after the expiration date of the period set for reply in the office notice or action plus an extensions of time actually obtained.

APPLICANT HEREBY PETITIONS FOR REVIVAL OF THIS APPLICATION

NOTE: A grantable petition requires the following items:
(1) Petition fee;
(2) Reply and/or issue fee;
(3) Terminal disclaimer with disclaimer fee - required for all utility and plant applications filed before June 8, 1995; and for all design applications; and
(4) Statement that the entire delay was unintentional.

1. Petition fee

☐ Small entity-fee $ _____ (37 CFR 1.17(m)). Applicant claims small entity status. See 37 CFR 1.27.

☐ Other than small entity – fee $ _____ (37 CFR 1.17(m))

2. Reply and/or fee

A. The reply and/or fee to the above-noted Office action in the form of _____(identify type of reply):

☐ has been filed previously on _____.
☐ is enclosed herewith.

B. The issue fee and publication fee (if applicable) of $ _____.

☐ has been paid previously on _____.
☐ is enclosed herewith.

This collection of information is required by 37 CFR 1.137(b). The information is required to obtain or retain a benefit by the public which is to file (and by the USPTO to process) an application. Confidentiality is governed by 35 U.S.C. 122 and 37 CFR 1.11 and 1.14. This collection is estimated to take 1.0 hour to complete, including gathering, preparing, and submitting the completed application form to the USPTO. Time will vary depending upon the individual case. Any comments on the amount of time you require to complete this form and/or suggestions for reducing this burden, should be sent to the Chief Information Officer, U.S. Patent and Trademark Office, U.S. Department of Commerce, P.O. Box 1450, Alexandria, VA 22313-1450. DO NOT SEND FEES OR COMPLETED FORMS TO THIS ADDRESS. **SEND TO: Mail Stop Petition, Commissioner for Patents, P.O. Box 1450, Alexandria, VA 22313-1450.**

If you need assistance in completing the form, call 1-800-PTO-9199 and select option 2.

Under the Paperwork Reduction Act of 1995, no persons are required to respond to a collection of information unless it displays a valid OMB control number.

3. Terminal disclaimer with disclaimer fee

☐ Since this utility/plant application was filed on or after June 8, 1995, no terminal disclaimer is required.

☐ A terminal disclaimer (and disclaimer fee (37 CFR 1.20(d)) of $ _____ for a small entity or $ _____ for other than a small entity) disclaiming the required period of time is enclosed herewith (see PTO/SB/63).

4. STATEMENT: The entire delay in filing the required reply from the due date for the required reply until the filing of a grantable petition under 37 CFR 1.137(b) was unintentional. [NOTE: The United States Patent and Trademark Office may require additional information if there is a question as to whether either the abandonment or the delay in filing a petition under 37 CFR 1.137(b) was unintentional (MPEP 711.03(c), subsections (III)(C) and (D)).]

WARNING:

Petitioner/applicant is cautioned to avoid submitting personal information in documents filed in a patent application that may contribute to identity theft. Personal information such as social security numbers, bank account numbers, or credit card numbers (other than a check or credit card authorization form PTO-2038 submitted for payment purposes) is never required by the USPTO to support a petition or an application. If this type of personal information is included in documents submitted to the USPTO, petitioners/applicants should consider redacting such personal information from the documents before submitting them to the USPTO. Petitioner/applicant is advised that the record of a patent application is available to the public after publication of the application (unless a non-publication request in compliance with 37 CFR 1.213(a) is made in the application) or issuance of a patent. Furthermore, the record from an abandoned application may also be available to the public if the application is referenced in a published application or an issued patent (see 37 CFR 1.14). Checks and credit card authorization forms PTO-2038 submitted for payment purposes are not retained in the application file and therefore are not publicly available.

Signature	Date
Typed or printed name	Registration Number, if applicable
Address	Telephone Number
Address	

Enclosures: ☐ Fee Payment

☐ Reply

☐ Terminal Disclaimer Form

☐ Additional sheets containing statements establishing unintentional delay

☐ Other: _____

CERTIFICATE OF MAILING OR TRANSMISSION [37 CFR 1.8(a)]

I hereby certify that this correspondence is being:

☐ Deposited with the United States Postal Service on the date shown below with sufficient postage as first class mail in an envelope addressed to: Mail Stop Petition, Commissioner for Patents, P. O. Box 1450, Alexandria, VA 22313-1450.

☐ Transmitted by facsimile on the date shown below to the United States Patent and Trademark Office as (571) 273-8300.

Date	Signature
	Typed or printed name of person signing certificate

Privacy Act Statement

The **Privacy Act of 1974 (P.L. 93-579)** requires that you be given certain information in connection with your submission of the attached form related to a patent application or patent. Accordingly, pursuant to the requirements of the Act, please be advised that: (1) the general authority for the collection of this information is 35 U.S.C. 2(b)(2); (2) furnishing of the information solicited is voluntary; and (3) the principal purpose for which the information is used by the U.S. Patent and Trademark Office is to process and/or examine your submission related to a patent application or patent. If you do not furnish the requested information, the U.S. Patent and Trademark Office may not be able to process and/or examine your submission, which may result in termination of proceedings or abandonment of the application or expiration of the patent.

The information provided by you in this form will be subject to the following routine uses:

1. The information on this form will be treated confidentially to the extent allowed under the Freedom of Information Act (5 U.S.C. 552) and the Privacy Act (5 U.S.C 552a). Records from this system of records may be disclosed to the Department of Justice to determine whether disclosure of these records is required by the Freedom of Information Act.
2. A record from this system of records may be disclosed, as a routine use, in the course of presenting evidence to a court, magistrate, or administrative tribunal, including disclosures to opposing counsel in the course of settlement negotiations.
3. A record in this system of records may be disclosed, as a routine use, to a Member of Congress submitting a request involving an individual, to whom the record pertains, when the individual has requested assistance from the Member with respect to the subject matter of the record.
4. A record in this system of records may be disclosed, as a routine use, to a contractor of the Agency having need for the information in order to perform a contract. Recipients of information shall be required to comply with the requirements of the Privacy Act of 1974, as amended, pursuant to 5 U.S.C. 552a(m).
5. A record related to an International Application filed under the Patent Cooperation Treaty in this system of records may be disclosed, as a routine use, to the International Bureau of the World Intellectual Property Organization, pursuant to the Patent Cooperation Treaty.
6. A record in this system of records may be disclosed, as a routine use, to another federal agency for purposes of National Security review (35 U.S.C. 181) and for review pursuant to the Atomic Energy Act (42 U.S.C. 218(c)).
7. A record from this system of records may be disclosed, as a routine use, to the Administrator, General Services, or his/her designee, during an inspection of records conducted by GSA as part of that agency's responsibility to recommend improvements in records management practices and programs, under authority of 44 U.S.C. 2904 and 2906. Such disclosure shall be made in accordance with the GSA regulations governing inspection of records for this purpose, and any other relevant (*i.e.*, GSA or Commerce) directive. Such disclosure shall not be used to make determinations about individuals.
8. A record from this system of records may be disclosed, as a routine use, to the public after either publication of the application pursuant to 35 U.S.C. 122(b) or issuance of a patent pursuant to 35 U.S.C. 151. Further, a record may be disclosed, subject to the limitations of 37 CFR 1.14, as a routine use, to the public if the record was filed in an application which became abandoned or in which the proceedings were terminated and which application is referenced by either a published application, an application open to public inspection or an issued patent.
9. A record from this system of records may be disclosed, as a routine use, to a Federal, State, or local law enforcement agency, if the USPTO becomes aware of a violation or potential violation of law or regulation.

UNITED STATES PATENT AND TRADEMARK OFFICE

Commissioner for Patents
United States Patent and Trademark Office
P.O. Box 1450
Alexandria, VA 22313-1450
www.uspto.gov

SCHWEGMAN, LUNDBERG &
WOESSNER, P.A.
P.O. BOX 2938
MINNEAPOLIS, MN 55402

MAILED

JUN 18 2010

OFFICE OF PETITIONS

In re Application of

Heeg, et al.

Application No. 10/794,860

Filing Date: March 5, 2004

Attorney Docket No. 1356.011US2

ON PETITION

This is a decision on the petition under 37 CFR 1.137(b), filed April 21, 2010.

The petition is **GRANTED**.

This application became abandoned for failure to respond in a timely manner to the non-final Office action mailed October 9, 2009. The notice allowed a shortened statutory period for reply of three months from its mailing date. No reply was received within the allowable period, and the application became abandoned on December 10, 2009.

The response filed April 21, 2010, is noted.

The request for an extension within the third month filed April 21, 2010, is noted but cannot be granted as the request was made outside the maximum extendable period for reply to the non-final Office action. The amount of $555.00 will be refunded, in due course.

The application is being forwarded to Technology Center 1600, GAU 1655 for further processing.

Telephone inquiries concerning this decision should be directed to the undersigned at (571) 272-3222.

Kenya A. McLaughlin
Petitions Attorney
Office of Petitions

UNITED STATES PATENT AND TRADEMARK OFFICE

Commissioner for Patents
United States Patent and Trademark Office
P.O. Box 1450
Alexandria, VA 22313-1450
www.uspto.gov

EUGENIO J. TORRES
FERRAMAR BUILDING, SUITE 1
1060 ASHFORD AVENUE
SAN JUAN, PR 00907

COPY MAILED

APR 27 2006

OFFICE OF PETITIONS

In re Application of	:	
Pablo Navarro Figueroa	:	
Application No. 10/794,890	:	DECISION ON PETITION
Filed: November 26, 2004	:	TO MAKE SPECIAL UNDER
For: EXTRUDED PLASTIC BLADE EQUIPPED	:	37 CFR 1.102(c)(1)
WITH CLIPS TO GRAB NOTICE PAPERS	:	

This is a decision on the petition under 37 CFR 1.102(c)(1), filed March 23, 2006, to make the above-identified application special based on applicant's age as set forth in M.P.E.P. § 708.02, Section IV.

The petition is **GRANTED**.

A grantable petition to make an application special under 37 CFR 1.102(c)(1) and MPEP § 708.02, Section IV: Applicant's Age must be accompanied by evidence showing that at least one of the applicants is 65 years of age, or more, such as a birth certificate or a statement by applicant. No fee is required.

The petition includes a copy of a birth certificate. Accordingly, the above-identified application has been accorded "special" status.

Telephone inquiries concerning this decision should be directed to Wan Laymon at 571-272-3220.

All other inquiries concerning either the examination or status of the application should be directed to the Technology Center.

This matter is being referred to Technology Center AU 3654 for action on the merits commensurate with this decision.

Wan Laymon
Wan Laymon
Petitions Examiner
Office of Petitions

UNITED STATES PATENT AND TRADEMARK OFFICE

Commissioner for Patents
United States Patent and Trademark Office
P.O. Box 1450
Alexandria, VA 22313-1450
www.uspto.gov

COPY MAILED
AUG 15 2006
OFFICE OF PETITIONS

Ali Kamarei, Esq.
280 Colorado Ave.
Palo Alto CA 94301

In re Application of
DANIELS
Application No. 10/794,892
Filed: March 5, 2004
Attorney Docket No. ENDO 012

DECISION
ON PETITION

This is a decision on the petition filed December 13, 2005, which is being treated as a request under 37 CFR 1.8(b)[1] to consider the October 3, 2005 submission as timely.

The request under 37 CFR 1.8(b) to consider the October 3, 2005 submission as timely is **GRANTED**. The holding of abandonment is vacated, and this application restored to pending status.

The application became abandoned for failure to reply in a timely manner to the Restriction Requirement mailed March 31, 2005 which set a shortened statutory period for reply of one (1) month or thirty (30) days (whichever is later). No extensions of time under the provisions of 37 CFR 1.136(a) were charged. Accordingly, the application purportedly became abandoned on May 3, 2005.

37 CFR 1.8 (b) states:

> [i]n the event that correspondence is considered timely filed by being mailed or transmitted in accordance with paragraph (a) of this section, but not received in the U.S. Patent and Trademark Office after a reasonable amount of time has elapsed from the time of mailing or transmitting of the correspondence, or after the application is held to be abandoned, or after the proceeding is dismissed, terminated, or decided with prejudice, the correspondence will be considered timely if the party who forwarded such correspondence:
> (1) Informs the Office of the previous mailing or transmission of the correspondence promptly after becoming aware that the Office has no evidence of receipt of the correspondence;
> (2) Supplies an additional copy of the previously mailed or transmitted correspondence and certificate; and
> (3) Includes a statement which attests on a personal knowledge basis or to the satisfaction of the Director to the previous timely mailing or transmission. If the correspondence was sent by facsimile transmission, a copy of the sending unit's report confirming transmission may be used to support this statement.

[1] For the purposes of 37 CFR 1.8(a)(1)(i)(A), first class mail is interpreted as including "Express Mail" and "Priority Mail" deposited with the U.S. Postal Service.

Petitioner has met the conditions of 37 CFR 1.8(b), and the correspondence will be considered timely.

In support of the request, petitioner informed the Office of the previous mailing of the reply to the restriction requirement after becoming aware that the Office had no evidence of receipt of the correspondence and provided an additional copy of the previously mailed correspondence on October 3, 2005 and December 13, 2005. The Transmittal Form (PTO/SB/21) provided on October 3, 2005 and December 13, 2005 also includes a certificate of mailing under 37 CFR 1.8 signed by Ali Kamarei (Kamarei) with the date of July 28, 2005, itemizing the fee transmittal form (with fee attached), the reply and an extension of time request. The extension of time fee for three months ($510) has been received. Kamarei certifies in the certificate of mailing on PTO/SB/21 that the correspondence, outlined in the transmittal form, was deposited with the United States Postal Service with sufficient postage as first class mail on July 28, 2005. (As stated above, first class mail includes "Express Mail," as was used to mail the above-discussed correspondence.) Furthermore, the petition filed on December 13, 2005 includes a statement from Kamarei attesting to the previously timely mailing, in that "[t]he response to the Official Action, Restriction Requirement of March 31, 2005[,] was deposited with the United States Postal Service with sufficient postage as Express Mail on July 27, 2005."[2]

Therefore pursuant to 37 CFR 1.8(b), the reply to the restriction requirement is considered timely submitted.

The $250 petition fee will be refunded in due course.

Telephone inquiries concerning this decision should be directed to Denise Pothier at (571) 272-4787.

The application matter is being forwarded to Technology Center Art Unit 1654 for further processing.

Frances Hicks

Frances Hicks
Petitions Examiner
Office of Petitions

[2] Both July 27, 2005 and July 28, 2005 require a three-month extension of time. Thus whether the mailing was on July 27, 2005 or July 28, 2005, the correspondence was timely mailed.

UNITED STATES PATENT AND TRADEMARK OFFICE

Commissioner for Patents
United States Patent and Trademark Office
P.O. Box 1450
Alexandria, VA 22313-1450
www.uspto.gov

COPY MAILED
SEP 15 2006
OFFICE OF PETITIONS

GERARD E. MOY
1608 DANUBE LANE
PLANO, TX 75075

In re Application of	:	
Clayton	:	
Application No. 10/794,916	:	DECISION ON PETITION
Filed: March 6, 2004	:	TO WITHDRAW
Attorney Docket No.	:	FROM RECORD
	:	

This is a decision on the Request to Withdraw as attorney or agent of record under 37 C.F.R. § 1.36(b), filed May 26, 2006.

The request is **DISMISSED** as moot.

A review of the file record indicates that the power of attorney to Gerald E. Moy has been revoked by the applicant of the patent application on June 30, 2006. Accordingly, the request to withdraw under 37 C.F.R. § 1.36(b) is moot.

All future communications from the Office will continue to be directed to the below-listed address until otherwise notified by applicant.

Telephone inquires concerning this decision should be directed to April Wise at 571-272-1642.

April M. Wise
Petitions Examiner
Office of Petitions

cc: LINDSEY SCOTT
LAW OFFICE OF F. LINDSEY SCOTT
2329 COIT ROAD
SUITE B
PLANO TX 75075-3796

UNITED STATES PATENT AND TRADEMARK OFFICE

COMMISSIONER FOR PATENTS
UNITED STATES PATENT AND TRADEMARK OFFICE
P.O. BOX 1450
ALEXANDRIA, VA 22313-1450
WWW.USPTO.GOV

Paper No.

QUALCOMM INCORPORATED
5775 MOREHOUSE DR.
SAN DIEGO CA 92121

MAILED

SEP 29 2009

OFFICE OF PETITIONS

In re Application of	:	
Walton et al.	:	
Application No. 10/794,918	:	DECISION ON PETITION
Filing Date: March 5, 2004	:	PURSUANT TO
Attorney Docket No.: 040235U1	:	37 C.F.R. § 1.78(A)(3)
Title: TRANSMIT DIVERSITY AND	:	
SPATIAL SPREADING FOR AN OFDM-	:	
BASED MULTI-ANTENNA	:	
COMMUNICATION SYSTEM	:	

This is a decision on the "PETITION TO CORRECT PRIORTIY CLAIM" filed on August 22, 2009, to accept an unintentionally delayed claim under 35 U.S.C. § 120 for the benefit of priority to prior-filed non-provisional application 10/781,951, set forth in an amendment to the specification that was filed concurrently with this petition. This submission is being treated as a petition pursuant to 37 C.F.R. § 1.78(a)(3).

This petition pursuant to 37 C.F.R. § 1.78(a)(3) is **GRANTED**.

A petition for acceptance of a claim for late priority pursuant to 37 C.F.R. § 1.78(a)(3) is only applicable to those applications filed on or after November 29, 2000. Further, the petition is appropriate only after the expiration of the period specified in 37 C.F.R. § 1.78(a)(2)(ii). In addition, the petition pursuant to 37 C.F.R. § 1.78(a)(3) must be accompanied by:

(1) the reference required by 35 U.S.C. § 120 and 37 C.F.R. § 1.78(a)(2)(i) of the prior-

filed applications, unless previously submitted;

(2) the surcharge set forth in 37 C.F.R. § 1.17(t), and;

(3) a statement that the entire delay between the date the claim was due under 37 C.F.R. § 1.78(a)(2)(ii) and the date the claim was filed was unintentional. The Director may require additional information where there is a question whether the delay was unintentional.

Petitioner has included the petition fee, an amendment to the specification, and the proper statement of unintentional delay.

All of the above requirements having been satisfied, the late claim for priority pursuant to 35 U.S.C. § 120 is accepted as being unintentionally delayed.

The granting of this petition to accept the delayed benefit claim to the prior-filed application pursuant to 37 C.F.R. § 1.78(a)(3) should not be construed as meaning that this application is entitled to the benefit of the prior-filed application. In order for this application to be entitled to the benefit of the prior-filed application, all other requirements under 35 U.S.C. § 120 and 37 C.F.R. §§ 1.78(a)(1) and (a)(2) must be met. Similarly, the fact that the corrected Filing Receipt accompanying this decision on petition includes the prior-filed application should not be construed as meaning that Applicant is entitled to the claim for benefit of priority to the prior-filed application noted thereon. Accordingly, the Examiner will, in due course, consider this benefit claim and determine whether the application is entitled to the benefit of the earlier filing date.

A corrected Filing Receipt, which includes the priority claim to the prior-filed nonprovisional application, accompanies this decision on petition.

This application is being forwarded to Technology Center Art Unit 2416 for consideration by the examiner of applicant's entitlement to claim benefit of priority under 35 U.S.C. § 120 to the prior-filed application.

Telephone inquiries regarding this decision should be directed to Senior Attorney Paul Shanoski at (571) 272-3225.[1]

Anthony Knight
Supervisor
Office of Petitions

Encl. Corrected Filing Receipt

1 Petitioner will note that all practice before the Office should be in writing, and the action of the Office will be based exclusively on the written record in the Office. See 37 C.F.R. § 1.2. As such, Petitioner is reminded that no telephone discussion may be controlling or considered authority for any further action(s) of Petitioner.

UNITED STATES PATENT AND TRADEMARK OFFICE

UNITED STATES DEPARTMENT OF COMMERCE
United States Patent and Trademark Office
Address: COMMISSIONER FOR PATENTS
P.O. Box 1450
Alexandria, Virginia 22313-1450
www.uspto.gov

APPLICATION NUMBER	FILING or 371(c) DATE	GRP ART UNIT	FIL FEE REC'D	ATTY.DOCKET.NO	TOT CLAIMS	IND CLAIMS
10/794,918	03/05/2004	2416	2552	040235U1	64	13

CONFIRMATION NO. 9474

CORRECTED FILING RECEIPT

23696
QUALCOMM INCORPORATED
5775 MOREHOUSE DR.
SAN DIEGO, CA 92121

OC000000037906210

Date Mailed: 09/28/2009

Receipt is acknowledged of this non-provisional patent application. The application will be taken up for examination in due course. Applicant will be notified as to the results of the examination. Any correspondence concerning the application must include the following identification information: the U.S. APPLICATION NUMBER, FILING DATE, NAME OF APPLICANT, and TITLE OF INVENTION. Fees transmitted by check or draft are subject to collection. Please verify the accuracy of the data presented on this receipt. **If an error is noted on this Filing Receipt, please submit a written request for a Filing Receipt Correction. Please provide a copy of this Filing Receipt with the changes noted thereon. If you received a "Notice to File Missing Parts" for this application, please submit any corrections to this Filing Receipt with your reply to the Notice. When the USPTO processes the reply to the Notice, the USPTO will generate another Filing Receipt incorporating the requested corrections**

Applicant(s)

J. Rodney Walton, Carlisle, MA;
John W. Ketchum, Harvard, MA;
Mark S. Wallace, Bedford, MA;
Steven J. Howard, Ashland, MA;
Sanjiv Nanda, Ramona, CA;

Power of Attorney: The patent practitioners associated with Customer Number 23696

Domestic Priority data as claimed by applicant

This application is a CIP of 10/781,951 02/18/2004

Foreign Applications

If Required, Foreign Filing License Granted: 05/25/2004

The country code and number of your priority application, to be used for filing abroad under the Paris Convention, is **US 10/794,918**

Projected Publication Date: Not Applicable

Non-Publication Request: No

Early Publication Request: No

Title

Transmit diversity and spatial spreading for an OFDM-based multi-antenna communication system

Preliminary Class

370

PROTECTING YOUR INVENTION OUTSIDE THE UNITED STATES

Since the rights granted by a U.S. patent extend only throughout the territory of the United States and have no effect in a foreign country, an inventor who wishes patent protection in another country must apply for a patent in a specific country or in regional patent offices. Applicants may wish to consider the filing of an international application under the Patent Cooperation Treaty (PCT). An international (PCT) application generally has the same effect as a regular national patent application in each PCT-member country. The PCT process **simplifies** the filing of patent applications on the same invention in member countries, but **does not result** in a grant of "an international patent" and does not eliminate the need of applicants to file additional documents and fees in countries where patent protection is desired.

Almost every country has its own patent law, and a person desiring a patent in a particular country must make an application for patent in that country in accordance with its particular laws. Since the laws of many countries differ in various respects from the patent law of the United States, applicants are advised to seek guidance from specific foreign countries to ensure that patent rights are not lost prematurely.

Applicants also are advised that in the case of inventions made in the United States, the Director of the USPTO must issue a license before applicants can apply for a patent in a foreign country. The filing of a U.S. patent application serves as a request for a foreign filing license. The application's filing receipt contains further information and guidance as to the status of applicant's license for foreign filing.

Applicants may wish to consult the USPTO booklet, "General Information Concerning Patents" (specifically, the section entitled "Treaties and Foreign Patents") for more information on timeframes and deadlines for filing foreign patent applications. The guide is available either by contacting the USPTO Contact Center at 800-786-9199, or it can be viewed on the USPTO website at http://www.uspto.gov/web/offices/pac/doc/general/index.html.

For information on preventing theft of your intellectual property (patents, trademarks and copyrights), you may wish to consult the U.S. Government website, http://www.stopfakes.gov. Part of a Department of Commerce initiative, this website includes self-help "toolkits" giving innovators guidance on how to protect intellectual property in specific countries such as China, Korea and Mexico. For questions regarding patent enforcement issues, applicants may call the U.S. Government hotline at 1-866-999-HALT (1-866-999-4158).

LICENSE FOR FOREIGN FILING UNDER

Title 35, United States Code, Section 184

Title 37, Code of Federal Regulations, 5.11 & 5.15

GRANTED

The applicant has been granted a license under 35 U.S.C. 184, if the phrase "IF REQUIRED, FOREIGN FILING LICENSE GRANTED" followed by a date appears on this form. Such licenses are issued in all applications where the conditions for issuance of a license have been met, regardless of whether or not a license may be required as

set forth in 37 CFR 5.15. The scope and limitations of this license are set forth in 37 CFR 5.15(a) unless an earlier license has been issued under 37 CFR 5.15(b). The license is subject to revocation upon written notification. The date indicated is the effective date of the license, unless an earlier license of similar scope has been granted under 37 CFR 5.13 or 5.14.

This license is to be retained by the licensee and may be used at any time on or after the effective date thereof unless it is revoked. This license is automatically transferred to any related applications(s) filed under 37 CFR 1.53(d). This license is not retroactive.

The grant of a license does not in any way lessen the responsibility of a licensee for the security of the subject matter as imposed by any Government contract or the provisions of existing laws relating to espionage and the national security or the export of technical data. Licensees should apprise themselves of current regulations especially with respect to certain countries, of other agencies, particularly the Office of Defense Trade Controls, Department of State (with respect to Arms, Munitions and Implements of War (22 CFR 121-128)); the Bureau of Industry and Security, Department of Commerce (15 CFR parts 730-774); the Office of Foreign AssetsControl, Department of Treasury (31 CFR Parts 500+) and the Department of Energy.

NOT GRANTED

No license under 35 U.S.C. 184 has been granted at this time, if the phrase "IF REQUIRED, FOREIGN FILING LICENSE GRANTED" DOES NOT appear on this form. Applicant may still petition for a license under 37 CFR 5.12, if a license is desired before the expiration of 6 months from the filing date of the application. If 6 months has lapsed from the filing date of this application and the licensee has not received any indication of a secrecy order under 35 U.S.C. 181, the licensee may foreign file the application pursuant to 37 CFR 5.15(b).

UNITED STATES PATENT AND TRADEMARK OFFICE

Commissioner for Patents
United States Patent and Trademark Office
P.O. Box 1450
Alexandria, VA 22313-1450
www.uspto.gov

DAVID P DURESKA
BUCKINGHAM DOOLITTLE
& BURROUGHS, LLP
4518 FULTON DRIVE, NW
P O BOX 35548
CANTON OH 44735-5548

COPY MAILED
SEP 11 2008
OFFICE OF PETITIONS

In re Application of	:	
White, et al.	:	
Application No. 10/794,942	:	DECISION ON PETITION
Filed: 5 March, 2004	:	
Attorney Docket No. HEND-BC-REG	:	

This is a decision on the petition filed on 6 September, 2007, requesting correction of inventorship in the instant application, and seeking relief under the provisions of 37 C.F.R §1.182 and 37 C.F.R §1.48.

The Office regrets the delay in addressing this matter, however, the instant petition was presented to the attorneys in the Office of Petitions only at this writing.

> **NOTE**: There is no indication that Petitioner herein was ever empowered to prosecute the instant application. If Petitioner desires to receive future correspondence regarding this application, the appropriate power of attorney documentation must be submitted. A courtesy copy of this decision will be mailed to Petitioner. However, all future correspondence will be directed to the address of record until such time as appropriate instructions are received to the contrary.

The petitions under 37 C.F.R §1.182 37 C.F.R §1.48 are **DISMISSED**.

As discussed hereinbelow, the instant application stands abandoned, and Petitioner has failed to satisfy the requirement that Petitioner make the affirmative showings as set forth in the guidance at MPEP §201.03, with particular attention to item D therein;

The involvement of third parties is governed by the provisions of 35 U.S.C. §122, as implemented by, e.g., 37 C.F.R. §1.99, §1.291 and §1.292. (See: MPEP §1134, §1134.01.)

If Petitioner seeks waiver of a rule or provisions thereof, Petitioner's proper route for such relief is a petition under 37 C.F.R. §1.183 (see: MPEP §1002).

Turning to the substance of the correction of inventorship, the guidance in the Commentary set forth at MPEP §201.03, in pertinent part, directs Petitioner to the proper procedure:

> **201.03Correction of Inventorship in an Application [R-5]**
>
> Correction of inventorship in an application is permitted by amendment under 35 U.S.C. §116, which is implemented by 37 C.F.R. §1.48. The utilization of a request under 37 C.F.R. §1.48 will generally correct the inventorship in the application in which it is filed. 37 C.F.R. §1.48(a) is directed at correcting the inventorship in an application where the inventorship was improperly set forth in the executed oath or declaration filed in the application. 37 C.F.R. §1.48(b) is directed at correcting the inventorship where the executed oath or declaration had correctly set forth the inventorship but due to prosecution of the application, e.g., claim cancellation or amendment, fewer than all of the currently named inventors are the actual inventors of the remaining claims. 37 C.F.R. §1.48(c) is directed at correcting the inventorship where the executed oath or declaration had correctly set forth the inventorship but due to amendment of the claims to include previously unclaimed but disclosed subject matter, one or more inventors of the amended subject matter must be added to the current inventorship. 37 C.F.R. §1.48(d) is directed at provisional applications where an inventor is to be added. 37 C.F.R. §1.48(e) is directed at provisional applications where an inventor is to be deleted. 37 C.F.R. §1.48(f) operates to automatically correct the inventorship upon filing of a first executed oath or declaration under 37 C.F.R. §1.63 by any of the inventors in a nonprovisional application or upon filing of a cover sheet in a provisional application.
>
> Correction of inventorship may also be obtained by the filing of a continuing application under 37 C.F.R. §1.53 without the need for filing a request under 37 C.F.R. §1.48, either in the application containing the inventorship err(using a copy of the executed oath or declaration from the parent application)or (to be abandoned) or in the continuing application. The continuing application must be filed with the correct inventorship named therein. The filing of a continuing application to correct the inventorship is appropriate if at least one of the correct inventors has been named in the prior application (35 U.S.C. §120 and 37 C.F.R. §1.78(a)(1)). That is, at least one of the correct inventors must be named in the executed oath or declaration filed in the prior application, or where no executed oath or declaration has been submitted in the prior application, the name of at least one correct inventor must be set forth in the application papers pursuant to 37 C.F.R. §1.41(a)(1). Where the name of at least one inventor is to be added, correction of inventorship can be accomplished by filing a continuing application under 37 C.F.R. §1.53(b) with a newly executed oath or declaration under 37 C.F.R. §1.63(a). Where the name of an inventor(s) is to be deleted, applicant can file a *>continuation or divisional<application >(using a copy of the

executed oath or declaration from the parent application)< with a request for deletion of the name of the inventor(s). >See 37 C.F.R. §1.63(d)(2). If a continuing application is filed with a new executed oath or declaration properly naming the correct inventors, a request for deletion of the name(s) of the person(s) who are not inventors in the continuing application is not necessary.< The continuing application may be filed under 37 C.F.R. 1.53(b) or, if the application is for a design patent, under 37 C.F.R. §1.53(d). Note the requirements of 37 C.F.R. §1.78 (a)(1)(ii).

***

Although 37 C.F.R. §1.48 does not contain a diligence requirement for filing the request, once an inventorship error is discovered, timeliness requirements under 37 C.F.R. §1.116 and 37 C.F.R. §1.312 apply. For allowed applications where the issue fee has been paid prior to the entry of a request under 37 C.F.R. §1.48, if the request under 37 C.F.R. §1.48 is dismissed or denied in an Office action, the application must be withdrawn from issue so that applicant would be given time to correct the defect(s). If the request under 37 C.F.R. §1.48 is granted, then it would not be necessary to withdraw the application from issue.

Requests under 37 C.F.R. §1.48 are generally decided by the primary examiner except:

(A)When the application is involved in an interference (decided by the Board of Patent Appeals and Interferences);

***

D. Written Consent of Assignee

The written consent of every existing assignee of the original named inventors must be submitted. 37 C.F.R. 1.48(a)(5). 37 C.F.R. 1.48(a) does not limit assignees to those who are recorded in the U.S. Patent and Trademark Office records. The Office employee deciding the request should check the file record for any indication of the existence of an assignee (e.g., a small entity assertion from an assignee).

Where no assignee exists requester should affirmatively state that fact. If the file record including the request is silent as to the existence of an assignee it will be presumed that no assignee exists. Such presumption should be set forth in the decision to alert requesters to the requirement.
The individual signing on behalf of the assignee giving its consent to the requested inventorship correction, should specifically state that he or she has the authority to act on behalf of the assignee. In the absence of such a statement, the consent will be accepted if it is signed by an appropriate official of the assignee (e.g., president, vice president, secretary, treasurer, or derivative thereof) if the official's title has been made of record. A general statement of authority to act for the assignee, or on the specific matter of consent, or the appropriate title of the party signing on behalf of the assignee should be made of record in the consent. However, if it appears in another paper of record, e.g., small entity assertion, it is also acceptable. Further, the assignee must establish its ownership of the application in accordance with 37 C.F.R. 3.73. MPEP § 324.

***

BACKGROUND

A search of the file indicates that:

The instant petition originally was filed on 1 August, 2005, under 37 C.F.R §1.48.

Petitioner failed to obtain the Examiner's grant of the request before the application went abandoned after midnight 3 January, 2006. (The Examiner mailed the Notice of Abandonment on 11 May, 2006.)

Petitioner filed the instant petition on 6 September, 2007.

The Examiner has refused to assent to the relief Petitioner seeks because Petitioner has failed to satisfy the requirement that Petitioner make the affirmative showings as set forth in the guidance at MPEP §201.03, with particular attention to item D therein, as set forth above.

Out of an abundance of caution, Petitioners always are reminded that those registered to practice *and* all others who make representations before the Office must inquire into the underlying facts of representations made to the Office and support averments with the appropriate documentation–since all owe to the Office the continuing duty to disclose.[1]

The availability of applications and application papers online to applicants/practitioners who diligently associate their Customer Number with the respective application(s) now provides an applicant/practitioner on-demand information as to events/transactions in an application. Thus, now if one wishes to know the progress in and/or status of an application or the accuracy of the data therein, one need only look at the file online.

The petitions under 37 C.F.R §1.182 and 37 C.F.R §1.48 are **dismissed**.

The instant application is released to IFW Files Repository.

[1] See supplement of 17 June, 1999. The Patent and Trademark Office is relying on petitioner's duty of candor and good faith and accepting a statement made by Petitioner. See Changes to Patent Practice and Procedure, 62 Fed. Reg. at 53160 and 53178, 1203 Off. Gaz. Pat. Office at 88 and 103 (responses to comments 64 and 109)(applicant obligated under 37 C.F.R. §10.18 to inquire into the underlying facts and circumstances when providing statements to the Patent and Trademark Office). See specifically, the regulations at 37 C.F.R. §10.18.

While telephone inquiries regarding this decision may be directed to the undersigned at (571) 272-3214, it is noted that all practice before the Office is in writing (see: 37 C.F.R. §1.2[2]) and the proper authority for action on any matter in this regard are the statutes (35 U.S.C.), regulations (37 C.F.R.) and the commentary on policy (MPEP). Therefore, no telephone discussion may be controlling or considered authority for Petitioner's action(s).

/John J. Gillon, Jr./
John J. Gillon, Jr.
Senior Attorney
Office of Petitions

cc:
THOMAS OPPOLD
LARKIN, HOFFMAN,
DALY & LINDGREN, LTD.
1500 WELLS FARGO PLAZA
7900 XERXES AVENUE SOUTH
BLOOMINGTON, MN 55431

[2] The regulations at 37 C.F.R. §1.2 provide:
§1.2 Business to be transacted in writing.
All business with the Patent and Trademark Office should be transacted in writing. The personal attendance of applicants or their attorneys or agents at the Patent and Trademark Office is unnecessary. The action of the Patent and Trademark Office will be based exclusively on the written record in the Office. No attention will be paid to any alleged oral promise, stipulation, or understanding in relation to which there is disagreement or doubt.

UNITED STATES PATENT AND TRADEMARK OFFICE

Commissioner for Patents
United States Patent and Trademark Office
P.O. Box 1450
Alexandria, VA 22313-1450
www.uspto.gov

DAVIS WRIGHT TREMAINE
2600 CENTURY SQUARE
1501 FOURTH AVENUE
SEATTLE WA 98101-1688

COPY MAILED

JUN 16 2005

OFFICE OF PETITIONS

In re Application of	:	
Douglas S. McRae	:	
Application No. 10/794,948	:	ON PETITION.
Filed: March 5, 2004	:	
Attorney Docket No. 59125-5	:	

This is a decision on the petition under 37 CFR 1.137(b), filed February 3, 2005, to revive the above-identified application.

The petition is **GRANTED**.

The above-identified application became abandoned for failure to submit the issue fee and publication fee in a timely manner in reply to the Notice of Allowance mailed September 29, 2004, which set a statutory period for reply of three (3) months. Accordingly, the above-identified application became abandoned on December 30, 2004.

Telephone inquiries concerning this decision should be directed to the undersigned at (571) 272-3208.

This matter is being referred to Patent Publication.

Karen Creasy

Karen Creasy
Petitions Examiner
Office of Petitions
Office of the Deputy Commissioner
for Patent Examination Policy

UNITED STATES PATENT AND TRADEMARK OFFICE

Commissioner for Patents
United States Patent and Trademark Office
P.O. Box 1450
Alexandria, VA 22313-1450
www.uspto.gov

WALL MARJAMA & BILINSKI
101 SOUTH SALINA STREET
SUITE 400
SYRACUSE, NY 13202

COPY MAILED

APR 14 2005

OFFICE OF PETITIONS

In re Application of	:	
Robert Schlinker et al	:	
Application No. 10/794,968	:	ON PETITION
Filed: March 5, 2004	:	
Attorney Docket No. 1235_006	:	

This is a decision on the petition under 37 CFR 1.137(b), filed March 9, 2005, to revive the above-identified application.

The petition is **GRANTED.**

The above-identified application became abandoned for failure to reply in a timely manner to the Requirement For Statement Under § 305(c) of the Aeronautics and Space Act mailed August 9, 2004, which set a period for reply of thirty (30) days. Accordingly, the above-identified application became abandoned on September 8, 2004.

Telephone inquiries concerning this decision should be directed to Wan Laymon at (571) 272-3220.

This matter is being referred to Technology Center AU 3746.

Wan Laymon

Wan Laymon
Petitions Examiner
Office of Petitions
Office of the Deputy Commissioner
for Patent Examination Policy

UNITED STATES PATENT AND TRADEMARK OFFICE

UNITED STATES DEPARTMENT OF COMMERCE
United States Patent and Trademark Office
Address: COMMISSIONER FOR PATENTS
P.O. Box 1450
Alexandria, Virginia 22313-1450
www.uspto.gov

APPLICATION NO.	FILING DATE	FIRST NAMED INVENTOR	ATTORNEY DOCKET NO.	CONFIRMATION NO.
10/794,970	03/05/2004	Peter Crane	715.002PA	8979

25891 7590 01/24/2006

BERNHARD P. MOLLDREM, JR.
224 HARRISON STREET
SUITE 200
SYRACUSE, NY 13202

EXAMINER
LOCKETT, KIMBERLY R

ART UNIT	PAPER NUMBER
2837	

DATE MAILED: 01/24/2006

Please find below and/or attached an Office communication concerning this application or proceeding.

UNITED STATES PATENT AND TRADEMARK OFFICE

Commissioner for Patents
United States Patent and Trademark Office
P.O. Box 1450
Alexandria, VA 22313-1450
www.uspto.gov

012006

LAW OFFICE OF BERNHARD P. MOLLDREM
333 E. ONONDAGA STREET, 2ND FLOOR
MONROE BUILDING
SYRACUSE, NY 13202

JAN 20 2006

In re Application of:
Peter Crane
Serial No.: 10/794,970
Filed: March 5, 2004
Attorney Docket No.: 715.002PA

DECISION ON PETITION TO WITHDRAW HOLDING OF ABANDONMENT

This is a decision on the petition filed January 10, 2006, to withdraw the holding of abandonment in the above-identified application under 37 CFR § 1.181. No petition fee is required.

The petition is **GRANTED.**

The application was held abandoned for failure to timely file a response to the non-final Office action of June 28, 2005. A Notice of Abandonment was mailed on January 9, 2006.

Petitioner asserts that the non-final Office action mailed June 28, 2005, was not received. To support this assertion, petitioner states that inspection of the relevant files verifies that the Office action was not received. Petitioner further asserts that the Office action was returned undelivered by the US Postal Service and was not remailed pursuant to USPTO records.

A review of the written record indicates that the non-final Office action mailed June 28, 2005, was not delivered and was returned to the USPTO on July 13, 2005 by the US Postal Service. The Office action was not remailed and a Notice of Abandonment was mailed on January 9, 2006.

Pursuant to M.P.E.P. § 707.13, when an Office action was returned undelivered, the USPTO should use every reasonable means to ascertain the correct address and forward the action again, after stamping it "remailed" with the date thereof and redirecting it if there is any reason to believe that the action would reach applicant at such new address. If the Office action was addressed to an attorney, a letter may be written to the inventor or assignee informing him or her of the returned action. The period running against the application begins with the date of remailing. *Ex parte Gourtoff*, 1924 C.D. 153, 329 O.G. 536 (Comm'r Pat. 1924). If the Office is not finally successful in delivering the letter, it is placed, with the envelope, in the file wrapper.

For an Image File Wrapper (IFW), a copy of the letter, and a copy of the envelope should be added to the IFW (see IFW Manual). If the period dating from the remailing elapses with no communication from applicant, the application is abandoned."

The non-final Office action was returned and was not remailed pursuant to M.P.E.P. § 707.13. The failure to remail the non-final Office action resulted in the petitioner not being duly served notice that a response to the Office action was required. Accordingly, the application is not abandoned in fact.

For the above stated reasons, the petition is granted. The Notice of Abandonment is hereby vacated and the holding of abandonment withdrawn. Inconvenience to the applicant is regretted.

The non-final Office action of June 28, 2005 will be remailed. The shortened statutory period for response will be reset to run from the date the action is remailed. Extensions of time are available under 37 C.F.R. § 1.136(a).

Inquiries regarding this decision should be directed to Hien H. Phan, Special Program Examiner, at (571) 272-1606.

Richard K. Seidel, TC Director
Technology Center 2800
Semiconductors, Electrical and Optical
Systems and Components

Office Action Summary	Application No.	Applicant(s)
	10/794,970	CRANE, PETER
	Examiner	Art Unit
	Kim R. Lockett	2837

-- The MAILING DATE of this communication appears on the cover sheet with the correspondence address --

Period for Reply

A SHORTENED STATUTORY PERIOD FOR REPLY IS SET TO EXPIRE 3 MONTH(S) FROM THE MAILING DATE OF THIS COMMUNICATION.

- Extensions of time may be available under the provisions of 37 CFR 1.136(a). In no event, however, may a reply be timely filed after SIX (6) MONTHS from the mailing date of this communication.
- If the period for reply specified above is less than thirty (30) days, a reply within the statutory minimum of thirty (30) days will be considered timely.
- If NO period for reply is specified above, the maximum statutory period will apply and will expire SIX (6) MONTHS from the mailing date of this communication.
- Failure to reply within the set or extended period for reply will, by statute, cause the application to become ABANDONED (35 U.S.C. § 133). Any reply received by the Office later than three months after the mailing date of this communication, even if timely filed, may reduce any earned patent term adjustment. See 37 CFR 1.704(b).

Status

1)☐ Responsive to communication(s) filed on _____.

2a)☐ This action is **FINAL**. 2b)☒ This action is non-final.

3)☐ Since this application is in condition for allowance except for formal matters, prosecution as to the merits is closed in accordance with the practice under *Ex parte Quayle*, 1935 C.D. 11, 453 O.G. 213.

Disposition of Claims

4)☐ Claim(s) _____ is/are pending in the application.

4a) Of the above claim(s) _____ is/are withdrawn from consideration.

5)☐ Claim(s) _____ is/are allowed.

6)☒ Claim(s) *1-3,7 and 9* is/are rejected.

7)☒ Claim(s) *4-6 and 8* is/are objected to.

8)☐ Claim(s) _____ are subject to restriction and/or election requirement.

Application Papers

9)☐ The specification is objected to by the Examiner.

10)☐ The drawing(s) filed on _____ is/are: a)☐ accepted or b)☐ objected to by the Examiner.

Applicant may not request that any objection to the drawing(s) be held in abeyance. See 37 CFR 1.85(a).

Replacement drawing sheet(s) including the correction is required if the drawing(s) is objected to. See 37 CFR 1.121(d).

11)☐ The oath or declaration is objected to by the Examiner. Note the attached Office Action or form PTO-152.

Priority under 35 U.S.C. § 119

12)☐ Acknowledgment is made of a claim for foreign priority under 35 U.S.C. § 119(a)-(d) or (f).

a)☐ All b)☐ Some * c)☐ None of:

1.☐ Certified copies of the priority documents have been received.

2.☐ Certified copies of the priority documents have been received in Application No. _____.

3.☐ Copies of the certified copies of the priority documents have been received in this National Stage application from the International Bureau (PCT Rule 17.2(a)).

* See the attached detailed Office action for a list of the certified copies not received.

Attachment(s)

1) ☒ Notice of References Cited (PTO-892)

2) ☐ Notice of Draftsperson's Patent Drawing Review (PTO-948)

3) ☒ Information Disclosure Statement(s) (PTO-1449 or PTO/SB/08) Paper No(s)/Mail Date *3/5,04*.

4) ☐ Interview Summary (PTO-413) Paper No(s)/Mail Date. _____.

5) ☐ Notice of Informal Patent Application (PTO-152)

6) ☐ Other: _____.

DETAILED ACTION

Claim Rejections - 35 USC § 103

1. The following is a quotation of 35 U.S.C. 103(a) which forms the basis for all obviousness rejections set forth in this Office action:

> (a) A patent may not be obtained though the invention is not identically disclosed or described as set forth in section 102 of this title, if the differences between the subject matter sought to be patented and the prior art are such that the subject matter as a whole would have been obvious at the time the invention was made to a person having ordinary skill in the art to which said subject matter pertains. Patentability shall not be negatived by the manner in which the invention was made.

2. Claims 1-3, 7, and 9 are rejected under 35 U.S.C. 103(a) as being unpatentable over Liao (5684258) in view of Fuller (706230).

Liao ('306) discloses a drum-mounted hand-slap striker-type cowbell percussion attachment for mounting onto a drum of the type having a bowl portion, a head mounted across an open rim of the bowl portion, and head attachment means forming annular flange around the bowl portion below the rim of the drum bowl portion; the attachment comprising: a brace for mounting onto a side of the drum bowl portion, including a transverse curved member adapted to rest atop said annular flange (see figure 7); at least one vertical leg affixed to the curved member with s a portion extending downward to a foot portion that resets against the side of the drum (see figure 1). Liao also discloses a transverse pivot member supported above a curved portion at a position above the rim of the drum bowl portion; and means supporting at least one percussion device at a position radially distal from said drum; and an elongated striker pivotally supported on said transverse pivot member (see figures 2 and 3).

Liao does not disclose the use of a striker with a handle.

Fuller discloses the use of a striker having a handle portion at a proximal end thereof and a striker tip at a distal end thereof; said striker tip being movable with the pivotal action of the striker between a neutral position and a striking position contacting a surface of said percussion device; a pivot journal between said tip and said handle portion that is pivotally journalled on said transverse pivot member; and return means biasing said striker to said neutral position (see figure 1; lines 20-45).

Liao and Fuller do not disclose the specific use of a jembe.

However, this limitation is disclosed as being conventional on page 1 of the applicant's disclosure

It would have been obvious to one of ordinary skill in the art at the time the invention was made to modify the percussion mechanism as disclosed by Liao with the striker as disclosed by Fuller in order to provide a convenient means of striking a percussion instrument.

3. Claims 4-6 and 8 are objected to as being dependent upon a rejected base claim, but would be allowable if rewritten in independent form including all of the limitations of the base claim and any intervening claims.

Papers related to this application may be submitted to Group 2800 by facsimile transmission. Papers should be faxed to Group 2800 via the PTO 2800 Fax Center at 703-872-9306.

For assistance in **Patent procedure, fees or general Patent questions** calls should be directed to the **Patents Assistance Center (PAC) whose telephone number is 800-786-9199**. Assistance is also available on the Internet at www.uspto.gov.

Any inquiry concerning **this communication or earlier communications from the examiner** should be directed to **Kim Lockett whose telephone number is (703) 308-7615, after 2/3/04 my new number will be (571) 272-2067.** The examiner can normally be reached on Tuesday through Friday from 6:30 am to 5:00 pm.

If attempts to reach the examiner by telephone are unsuccessful, the examiner's supervisor, David Martin can be reached on (571) 272-2107.

KIMBERLY LOCKETT
PRIMARY EXAMINER

Notice of References Cited	Application/Control No. 10/794,970	Applicant(s)/Patent Under Reexamination CRANE, PETER	
	Examiner Kim R. Lockett	Art Unit 2837	Page 1 of 1

U.S. PATENT DOCUMENTS

*		Document Number Country Code-Number-Kind Code	Date MM-YYYY	Name	Classification
	A	US-706,230	08-1902	FULLER	84/402
	B	US-5,684,258	11-1997	Liao, Tsun-Chi	84/421
	C	US-			
	D	US-			
	E	US-			
	F	US-			
	G	US-			
	H	US-			
	I	US-			
	J	US-			
	K	US-			
	L	US-			
	M	US-			

FOREIGN PATENT DOCUMENTS

*		Document Number Country Code-Number-Kind Code	Date MM-YYYY	Country	Name	Classification
	N					
	O					
	P					
	Q					
	R					
	S					
	T					

NON-PATENT DOCUMENTS

*		Include as applicable: Author, Title Date, Publisher, Edition or Volume, Pertinent Pages)
	U	
	V	
	W	
	X	

*A copy of this reference is not being furnished with this Office action. (See MPEP § 707.05(a).)
Dates in MM-YYYY format are publication dates. Classifications may be US or foreign.

Drum-Mounted Striker-Type Percussion Instrument

FORM PTO-1449 (Rev. 2-32) U.S. DEPARTMENT OF COMMERCE PATENT AND TRADEMARK OFFICE INFORMATION DISCLOSURE STATEMENT BY APPLICANT (Use several sheets if necessary)	ATTY. DOCKET NO. 715.002PA	PATENT NO. Appln Ser No:
	APPLICANT: Peter Crane	
	FILING DATE	GROUP

U.S. PATENT DOCUMENTS

EXAMINER INITIAL		DOCUMENT NUMBER	DATE	NAME	CLASS	SUBCLASS	FILING DATE If Appropriate
	AA	6,664,457	12-16-2003	King	84	402	02-15-2001
	AB	5,503,056	04-02-1996	Evans	84	422.4	
	AC	4,028,984	06-14-1977	Sanchez	84	422 R	
	AD	398,176	02-19-1889	Oerlein			
	AE						
	AF						
	AG						
	AH						

FOREIGN PATENT DOCUMENTS

EXAMINER INITIAL		DOCUMENT NUMBER	DATE	COUNTRY	CLASS	SUBCLASS	TRANSLATION

OTHER DOCUMENTS

EXAMINER INITIAL		DOCUMENT
	AL	
	AM	

EXAMINER		DATE CONSIDERED	10/23/05

EXAMINER: Initial if citation considered, whether or not citation is in conformance with MPEP 609; Draw line through citation if not in conformance and not considered. Include copy of this form with next communication to applicant.

(Form PTO-1449(6-4))

UNITED STATES PATENT AND TRADEMARK OFFICE

COMMISSIONER FOR PATENTS
UNITED STATES PATENT AND TRADEMARK OFFICE
P.O. BOX 1450
ALEXANDRIA, VA 22313-1450
WWW.USPTO.GOV

Paper No. None

PERRY TEITELBAUM
GOODMAN & TEITELBAUM
SUITE 1400
26 COURT STREET
BROOKLYN NY 11242

COPY MAILED

OCT 0 3 2005

OFFICE OF PETITIONS

In re Application of
Dan Siegel et al.
Application No. 10/794,978
Filed: March 5, 2004
Attorney Docket Number: P-0309A-LT
Title: BENCH TOP GRILL ASSEMBLY

DECISION ON PETITION UNDER
37 C.F.R. §1.137(b)

This is a decision on the petition under 37 CFR §1.137(b)[1], filed June 30, 2005, to revive the above-identified application.

The above-identified application became abandoned for failure to reply within the meaning of 37 CFR §1.112 in a timely manner to the non-final Office action mailed October 18, 2004, which set a shortened statutory period for reply of 3 months. No response was received, and no extensions of time were requested. As such, the above-identified application became abandoned on January 19, 2005.

With the present petition, Petitioner has submitted the petition fee, an amendment, and the proper statement of unintentional delay.

Petitioner has met all requirements for a grantable petition under 37 C.F.R. §1.137(b). As such, the petition is **GRANTED**.

---

1 A grantable petition pursuant to 37 CFR 1.137(b) must be accompanied by:

(1) The reply required to the outstanding Office action or notice, unless previously filed;
(2) The petition fee as set forth in § 1.17(m);
(3) A statement that the entire delay in filing the required reply from the due date for the reply until the filing of a grantable petition pursuant to this paragraph was unintentional. The Commissioner may require additional information where there is a question whether the delay was unintentional, and;
(4) Any terminal disclaimer (and fee as set forth in § 1.20(d)) required pursuant to paragraph (d) of this section.

Telephone inquiries regarding *this decision* should be directed to the undersigned at (571) 272-3225. All other inquiries concerning examination procedures or status of the application should be directed to the Technology Center.

It is noted that the address listed on the petition differs from the address of record. The application file does not indicate a change of correspondence address has been filed in this case, although the address given on the petition differs from the address of record. If petitioner desires to receive future correspondence regarding this application, the change of correspondence address must be submitted. A courtesy copy of this decision will be mailed to petitioner. However, all future correspondence will be directed to the address of record until such time as appropriate instructions are received to the contrary. Petitioner will not receive future correspondence unless a Change of Correspondence Address Form (PTO/SB/122) is submitted for the above-identified application. A blank Change of Correspondence Address Form (PTO/SB/122) may be found at http://www.uspto.gov/web/forms/sb0122.pdf.

It is not apparent whether the person signing the statement of unintentional delay was in a position to have firsthand or direct knowledge of the facts and circumstances of the delay at issue. Nevertheless, such statement is being treated as having been made as the result of a reasonable inquiry into the facts and circumstances of such delay[2]. In the event that such an inquiry has not been made, petitioner must make such an inquiry. If such inquiry results in the discovery that the delay in paying the maintenance fee under 37 CFR 1.137(b) was intentional, petitioner must notify the Office.

Paul Shanoski

Paul Shanoski
Senior Attorney
Office of Petitions
United States Patent and Trademark Office

cc: Myron Greenspan
LACKENBACH SIEGEL, LLP
1 CHASE ROAD
SCARSDALE, NY 10583

2 See 37 CFR 10.18(b); cf. Changes to Patent Practice and Procedure; Final Rule Notice, 62 Fed. Reg. 53131, 53178 (October 10, 1997), 1203 Off. Gaz. Pat. Office 63, 103 (October 21, 1997).

UNITED STATES PATENT AND TRADEMARK OFFICE

Commissioner for Patents
United States Patent and Trademark Office
P.O. Box 1450
Alexandria, VA 22313-1450
www.uspto.gov

FAEGRE & BENSON LLP
Patent Docketing
2200 Wells Fargo Center
Minneapolis, MN 55402

MAILED

DEC 1 4 2005

Technology Center 2100

In re Application of:	)
William S. WORLEY, JR.	) DECISION ON PETITION TO MAKE
Application No.: 10/794,995	) SPECIAL UNDER 37 C.F.R. §1.102(c)
Filed: March 4, 2004	) AND MPEP § 708.02 (IV):
For: CUSTOMIZED EXECUTION	) APPLICANT'S AGE
ENVIRONMENT	

This is a decision on the petition, filed November 21, 2005, under 37 C.F.R. §1.102(c) and M.P.E.P. §708.02(IV): Applicant's Age, to make the above-identified application special.

A grantable petition to make special under 37 C.F.R. § 1.102 and in accordance with M.P.E.P. § 708.02, Section IV must include a showing, as by a birth certificate or the applicant's statement, that the applicant is sixty five (65) years of age or more. No fee is required for this petition.

The petition includes declaration by William S. Worley, Jr., one of the applicants, asserting that declarant/applicant is sixty five (65) years of age or more.

Accordingly, the petition is **GRANTED.**

The application is being forwarded to the examiner for expedited prosecution and to consider the change of inventorship.

For Vincent N. Trans
Special Program Examiner
Technology Center 2100
Computer Architecture, Software, and
Information Security
571-272-3613

UNITED STATES PATENT AND TRADEMARK OFFICE

Commissioner for Patents
United States Patent and Trademark Office
P.O. Box 1450
Alexandria, VA 22313-1450
www.uspto.gov

RAJ S. DAVE
MORRISON & FOERSTER LLP
SUITE 300
1650 TYSONS BLVD.
MCLEAN VA 22102

COPY MAILED

JUN 0 1 2007

OFFICE OF PETITIONS

In re Application of :

SUN, Lei :
Application No. 10/794,996 : DECISION ON PETITION
Filed: March 04, 2004 : TO WITHDRAW
Attorney Docket No. **INTEL1550 (P15615)** : FROM RECORD
:

This is a decision on the Request to Withdraw as attorney or agent of record under 37 C.F.R. § 1.36(b), filed April 06, 2007.

The request is **APPROVED**.

A grantable request to withdraw as attorney/agent of record must be signed by every attorney/agent seeking to withdraw or contain a clear indication that one attorney is signing on behalf of another/others. A request to withdraw will not be approved unless at least 30 (thirty) days would remain between the date of approval and the later of the expiration date of a time to file a response or the expiration date of the maximum time period which can be extended under 37 C.F.R. § 1.136(a).

The request was signed by Peter J. Davis on behalf of all attorneys of record. Applicant is reminded that there is no attorney of record at this time.

The request to change the correspondence of record is not acceptable as the requested correspondence address is not that of: (1) the first named signing inventor; or (2) an intervening assignee of the entire interest under 37 C.F.R 3.71. All future communications from the Office will be directed to the first named signing inventor at the first copied address below until otherwise properly notified by the applicant.

Telephone inquiries concerning this decision should be directed to Tredelle Jackson at 571-272-2783.

Monica A. Graves
Petitions Examiner
Office of Petitions

cc: **LEI SUN**
2335 FALLING WATER CT.
SANTA CLARA, CA 95054

cc: **RAJ S. DAVE**
DARBY & DARBY P.C.
1500 K STREET, N.W.
SUITE 250
WASHINGTON, DC 20005-1714

UNITED STATES PATENT AND TRADEMARK OFFICE

Commissioner for Patents
United States Patent and Trademark Office
P.O. Box 1450
Alexandria, VA 22313-1450
www.uspto.gov

MORRISON & FOERSTER LLP
425 MARKET STREET
SAN FRANCISCO CA 94105-2482

COPY MAILED

OCT 20 2004

OFFICE OF PETITIONS

In re Application of
Robert Barham et al.
Application No. 10/795,001
Filed: March 3, 2004
Attorney's Docket No. 500852000102

ON PETITION

This is a decision on the petition, filed September 28, 2004, requesting, that the above-identified application be accorded a filing date of March 3, 2004 with pages 70, 82 and 86 of the specification as a part of the original disclosure.

The petition is **DISMISSED**.

The application was filed on March 3, 2004. However, on August 26, 2004 the Office of Initial Patent Examination mailed a "Notice Of Omitted Item(s) in a Nonprovisional Application" stating that the application had been accorded a filing date of March 3, 2004, and advising applicants that Pages 70, 82 and 86 of the specification appeared to have been omitted.

In response, the present petition was filed. Petitioners assert that pages 70, 82 and 86 of the specification were filed with the other application papers on March 3, 2004. In support, petitioners state that a copy of their postcard receipt in accordance with MPEP 503 is enclosed. However, no postcard receipt is located among the papers filed with the present petition.

A review of the Official file reveals that pages 70, 82 and 86 were not among the application papers filed on March 3, 2004. As the postcard receipt serves as the best evidence that the missing papers were timely deposited on March 3, 2004, petitioner should submit the postcard receipt with a renewed petition within TWO (2) MONTHS of the mailing date of this decision.

The application file will be held in the Office of Petitions for TWO (2) MONTHS to await petitioner's submission of the postcard receipt with a renewed petition. If no reply is received within the two (2) month period, the application will be returned to the Office of Initial Patent Examination for further processing with the disclosure as presently filed.

Further correspondence with respect to this matter should be addressed as follows:

By mail: Mail Stop Petitions
Commissioner for Patents
P.O. Box 1450
Alexandria VA 22313-1450

By FAX: (703) 872-9306
Attn: Office of Petitions

Telephone inquiries concerning this matter may be directed to the undersigned Petitions Attorney at (571) 272-3212.

Patricia Faison-Ball

Patricia Faison-Ball
Senior Petitions Attorney
Office of Petitions

UNITED STATES PATENT AND TRADEMARK OFFICE

Commissioner for Patents
United States Patent and Trademark Office
P.O. Box 1450
Alexandria, VA 22313-1450
www.uspto.gov

MORRISON & FOERSTER LLP
425 MARKET STREET
SAN FRANCISCO CA 94105-2482

COPY MAILED

NOV 0 4 2004

OFFICE OF PETITIONS

In re Application of
Robert Barham et al.
Application No. 10/795,001
Filed: March 3, 2004
Attorney's Docket No. 500852000102

ON PETITION

This is a decision on the renewed petition filed October 27, 2004 under 37 CFR 1.182 in response to the "Notice of Omitted Items" mailed March 24, 2004, and requesting, that the above-identified application be accorded a filing date of March 3, 2004 with pages 70, 82 and 86 of the specification as a part of the original disclosure.

The application was filed on March 3, 2004. However, on August 26, 2004 the Office of Initial Patent Examination mailed a "Notice Of Omitted Item(s) in a Nonprovisional Application" stating that the application had been accorded a filing date of March 3, 2004, and advising applicants that Pages 70, 82 and 86 of the specification appeared to have been omitted.

In response, a petition under 37 CFR 1.182 was filed September 28, 2004 but was dismissed in a decision mailed October 20, 2004 because while petitioners stated that pages 70, 82 and 86 were in fact included with the application upon filing, proof in the form of a postcard receipt in accordance with MPEP 503, and as claimed, was not found amongst the papers included with the petition.

Petitioner asserts that pages 70, 82 and 86 were among the papers filed on March 3, 2004, and with the renewed petition, submits a "legible" postcard receipt in evidence thereof. The postcard receipt, identifies the application and acknowledges, inter alia, the number of specification pages to be 109 and bears a United States Patent and Trademark Office date-stamp of March 3, 2004. Further, the postcard receipt lacks any notation of non-receipt of any item listed.

A review of the file reveals receipt on March 3, 2004 of 106 specification pages and the three pages alleged to have been omitted (pages 70, 82 and 86), would equal 109 as claimed.

In view of the foregoing, the petition is **Granted.**

Given the basis for granting the petition, no petition fee is due and thus the petition fee in the amount of $130.00 submitted September 28, 2004 will be credited to deposit account no. 03-1952.

This application is being forwarded to the Office of Initial Patent Examination (OIPE) for further processing, using the application papers received in the Office on March 3, 2004 and pages 70, 82 and 86 of the specification submitted September 28, 2004.

Telephone inquiries concerning this matter may be directed to the undersigned Petitions Attorney at (571) 272-3212.

Patricia Faison-Ball

Patricia Faison-Ball
Senior Petitions Attorney
Office of Petitions

UNITED STATES PATENT AND TRADEMARK OFFICE

COMMISSIONER FOR PATENTS
UNITED STATES PATENT AND TRADEMARK OFFICE
P.O. BOX 1450
ALEXANDRIA, VA 22313-1450
www.uspto.gov

MARVELL SEMICONDUCTOR, INC.
INTELLECTUAL PROPERTY DEPARTMENT
700 FIRST AVENUE, MS# 509
SUNNYVALE, CA 94089

COPY MAILED

FEB 09 2005

OFFICE OF PETITIONS

In re Application of	:	
Barash	:	DECISION ON PETITION
Application No. 10/795,003	:	
Filed: March 3, 2004	:	
Atty. Dkt. No.: MP0406	:	

This decision is in response to the "PETITION TO CORRECT FILING DATE AND DATE-IN DISCREPANCY," filed January 24, 2005. This petition is being treated under 37 CFR 1.10(c) to accord the above-identified application a filing date of March 3, 2004.

Petitioner alleges that the instant application was deposited in Express Mail service March 3, 2004. As supporting evidence, petitioner has provided a copy of an Express Mail label bearing tracking number EU881495323US (the same Express Mail number found on the application transmittal letter accompanying the original application papers located in the official file) and a "date-in" of March 3, 2004.

In view of the above, the petition under 37 CFR 1.10(c) to accord the above-identified application a filing date of March 3, 2004 is hereby **GRANTED**.

No fee is due in connection with this petition.

There is no indication that petitioner herein was ever empowered to prosecute the instant application. If petitioner desires to receive future correspondence regarding this application, the appropriate power of attorney documentation must be submitted. A courtesy copy of this decision will be mailed to petitioner. However, all future correspondence will be directed to the address of record until such time as appropriate instructions are received to the contrary.

This application is being forwarded to the Office of Initial Patent Examination for further processing with a filing date of March 3, 2004.

Telephone inquiries regarding this decision should be directed to the undersigned at (571) 272-3205.

Alesia M. Brown
Petitions Attorney
Office of Petitions

CC: ANDREW D. FORTNEY
7257 N. MAPLE AVENUE
BLDG. D, #107
FRESNO, CA 93720

UNITED STATES PATENT AND TRADEMARK OFFICE

COMMISSIONER FOR PATENTS
UNITED STATES PATENT AND TRADEMARK OFFICE
P.O. BOX 1450
ALEXANDRIA, VA 22313-1450
www.uspto.gov

KNOBBE MARTENS OLSON & BEAR LLP
2040 MAIN STREET
FOURTEENTH FLOOR
IRVINE CA 92614

COPY MAILED

AUG 16 2007

OFFICE OF PETITIONS

In re Application of	:	
Sircar, et al.	:	
Application No. 10/795,006	:	DECISION ON PETITION
Filed: 5 March, 2004	:	UNDER 37 CFR 1.78(a)(3)
Attorney Docket No.	:	
AVANIR.086DV1		

This is a decision on the petition under 37 CFR 1.78(a)(3), filed 30 April 2007, to accept an unintentionally delayed claim under 35 U.S.C. §120 for the benefit of priority to the prior-filed nonprovisional application set forth in the concurrently filed amendment.

The petition is **GRANTED.**

A petition for acceptance of a claim for late priority under 37 CFR 1.78(a)(3) is only applicable to those applications filed on or after November 29, 2000. Further, the petition is appropriate only after the expiration of the period specified in 37 CFR 1.78(a)(2)(ii). In addition, the petition under 37 CFR 1.78(a)(3) must be accompanied by:

(1) the reference required by 35 U.S.C. § 120 and 37 CFR 1.78(a)(2)(i) of the prior-filed application, unless previously submitted;
(2) the surcharge set forth in § 1.17(t); and
(3) a statement that the entire delay between the date the claim was due under 37 CFR 1.78(a)(2)(ii) and the date the claim was filed was unintentional. The Director may require additional information where there is a question whether the delay was unintentional.

A reference to the prior-filed nonprovisional application has been included in an amendment filed April 30, 2007. The amendment states that "… the prior application Ser. No.10/090,044 is also a continuation-in-part of U.S. application Ser. No. 09/422,304 …". However, this does not appear to be consistent with the prosecution history of the prior application. A review of the image file wrapper for application No. 10/090,044 does not reveal a paper (i.e., transmittal, declaration or specification) filed in that application with the cited reference. Nonetheless, a review of the issued patent reveals that it includes the claim under 35 U.S.C. 120 for the benefit of prior application No. 09/442,304. Moreover, the granting of the petition does not mean that this application is entitled to the benefit of the prior-filed application. The determination of entitlement is made by the examiner. In view thereof, the amendment is acceptable for purposes of granting this petition.

All of the above requirements having been satisfied, the late claim for benefit of priority to the prior-filed application under 35 U.S.C. § 120 is accepted as being unintentionally delayed.

The granting of the petition to accept the delayed benefit claim to the prior-filed applications under 37 CFR §§ 1.78(a)(3) should not be construed as meaning that this application is entitled to the benefit of the filing date of the prior-filed application. In order for this application to be entitled to the benefit of the prior-filed application, all other requirements under 35 U.S.C. §§120 and 1.78(a)(1) and (a)(2) must be met. Similarly, the fact that the corrected Filing Receipt accompanying this decision on petition includes the prior-filed application should not be construed as meaning that applicant is entitled to the claim for benefit of priority to the prior-filed application noted thereon. Accordingly, the examiner will, in due course, consider this benefit claim and determine whether the application is entitled to the benefit of the earlier filing date.

A corrected Filing Receipt, which includes the priority claim to the prior-filed application, accompanies this decision on petition.

Any questions concerning this matter may be directed to John J. Gillon, Jr. at (571) 272-3214. All other inquiries concerning either the examination procedures or status of the application should be directed to the Technology Center.

This application is being referred to Technology Center Art Unit 1625 for consideration by the examiner of the claim for benefit of priority under 35 U.S.C. § 120 to the prior-filed nonprovisional application.

Nancy Johnson
Senior Petitions Attorney
Office of Petitions

ATTACHMENT: Corrected Filing Receipt

UNITED STATES PATENT AND TRADEMARK OFFICE

UNITED STATES DEPARTMENT OF COMMERCE
United States Patent and Trademark Office
Address: COMMISSIONER FOR PATENTS
P.O. Box 1450
Alexandria, Virginia 22313-1450
www.uspto.gov

APPL NO.	FILING OR 371(c) DATE	ART UNIT	FIL FEE REC'D	ATTY.DOCKET NO	TOT CLMS	IND CLMS
10/795,006	03/05/2004	1625	1255	AVANIR.086DV1	69	6

CONFIRMATION NO. 8787

CORRECTED FILING RECEIPT

OC000000025392647

20995
KNOBBE MARTENS OLSON & BEAR LLP
2040 MAIN STREET
FOURTEENTH FLOOR
IRVINE, CA 92614

Date Mailed: 08/15/2007

Receipt is acknowledged of this nonprovisional patent application. The application will be taken up for examination in due course. Applicant will be notified as to the results of the examination. Any correspondence concerning the application must include the following identification information: the U.S. APPLICATION NUMBER, FILING DATE, NAME OF APPLICANT, and TITLE OF INVENTION. Fees transmitted by check or draft are subject to collection. Please verify the accuracy of the data presented on this receipt. **If an error is noted on this Filing Receipt, please write to the Office of Initial Patent Examination's Filing Receipt Corrections. Please provide a copy of this Filing Receipt with the changes noted thereon. If you received a "Notice to File Missing Parts" for this application, please submit any corrections to this Filing Receipt with your reply to the Notice. When the USPTO processes the reply to the Notice, the USPTO will generate another Filing Receipt incorporating the requested corrections (if appropriate).**

Applicant(s)

Jagadish C. Sircar, San Diego, CA;
Mark L. Richards, San Diego, CA;

Power of Attorney: The patent practitioners associated with Customer Number **20995**.

Domestic Priority data as claimed by applicant

This application is a DIV of 10/090,044 02/27/2002 PAT 6,759,425
which claims benefit of 60/275,260 03/12/2001
and is a CIP of 09/422,304 10/21/1999 PAT 6,369,091

Foreign Applications

If Required, Foreign Filing License Granted: 05/25/2004

The country code and number of your priority application, to be used for filing abroad under the Paris Convention, is US10/795,006

Projected Publication Date: Not Applicable

Non-Publication Request: No

Early Publication Request: No

** SMALL ENTITY **

Title

BENZIMIDAZOLE COMPOUNDS FOR MODULATING IGE AND INHIBITING CELLULAR PROLIFERATION

Preliminary Class

514

PROTECTING YOUR INVENTION OUTSIDE THE UNITED STATES

Since the rights granted by a U.S. patent extend only throughout the territory of the United States and have no effect in a foreign country, an inventor who wishes patent protection in another country must apply for a patent in a specific country or in regional patent offices. Applicants may wish to consider the filing of an international application under the Patent Cooperation Treaty (PCT). An international (PCT) application generally has the same effect as a regular national patent application in each PCT-member country. The PCT process **simplifies** the filing of patent applications on the same invention in member countries, but **does not result** in a grant of "an international patent" and does not eliminate the need of applicants to file additional documents and fees in countries where patent protection is desired.

Almost every country has its own patent law, and a person desiring a patent in a particular country must make an application for patent in that country in accordance with its particular laws. Since the laws of many countries differ in various respects from the patent law of the United States, applicants are advised to seek guidance from specific foreign countries to ensure that patent rights are not lost prematurely.

Applicants also are advised that in the case of inventions made in the United States, the Director of the USPTO must issue a license before applicants can apply for a patent in a foreign country. The filing of a U.S. patent application serves as a request for a foreign filing license. The application's filing receipt contains further information and guidance as to the status of applicant's license for foreign filing.

Applicants may wish to consult the USPTO booklet, "General Information Concerning Patents" (specifically, the section entitled "Treaties and Foreign Patents") for more information on timeframes and deadlines for filing foreign patent applications. The guide is available either by contacting the USPTO Contact Center at 800-786-9199, or it can be viewed on the USPTO website at http://www.uspto.gov/web/offices/pac/doc/general/index.html.

For information on preventing theft of your intellectual property (patents, trademarks and copyrights), you may wish to consult the U.S. Government website, http://www.stopfakes.gov. Part of a Department of Commerce initiative, this website includes self-help "toolkits" giving innovators guidance on how to protect intellectual property in specific countries such as China, Korea and Mexico. For questions regarding patent enforcement issues, applicants may call the U.S. Government hotline at 1-866-999-HALT (1-866-999-4158).

LICENSE FOR FOREIGN FILING UNDER
Title 35, United States Code, Section 184
Title 37, Code of Federal Regulations, 5.11 & 5.15

GRANTED

The applicant has been granted a license under 35 U.S.C. 184, if the phrase "IF REQUIRED, FOREIGN FILING LICENSE GRANTED" followed by a date appears on this form. Such licenses are issued in all applications where the conditions for issuance of a license have been met, regardless of whether or not a license may be required as set forth in 37 CFR 5.15. The scope and limitations of this license are set forth in 37 CFR 5.15(a) unless an earlier license has been issued under 37 CFR 5.15(b). The license is subject to revocation upon written notification. The

date indicated is the effective date of the license, unless an earlier license of similar scope has been granted under 37 CFR 5.13 or 5.14.

This license is to be retained by the licensee and may be used at any time on or after the effective date thereof unless it is revoked. This license is automatically transferred to any related applications(s) filed under 37 CFR 1.53(d). This license is not retroactive.

The grant of a license does not in any way lessen the responsibility of a licensee for the security of the subject matter as imposed by any Government contract or the provisions of existing laws relating to espionage and the national security or the export of technical data. Licensees should apprise themselves of current regulations especially with respect to certain countries, of other agencies, particularly the Office of Defense Trade Controls, Department of State (with respect to Arms, Munitions and Implements of War (22 CFR 121-128)); the Bureau of Industry and Security, Department of Commerce (15 CFR parts 730-774); the Office of Foreign Assets Control, Department of Treasury (31 CFR Parts 500+) and the Department of Energy.

NOT GRANTED

No license under 35 U.S.C. 184 has been granted at this time, if the phrase "IF REQUIRED, FOREIGN FILING LICENSE GRANTED" DOES NOT appear on this form. Applicant may still petition for a license under 37 CFR 5.12, if a license is desired before the expiration of 6 months from the filing date of the application. If 6 months has lapsed from the filing date of this application and the licensee has not received any indication of a secrecy order under 35 U.S.C. 181, the licensee may foreign file the application pursuant to 37 CFR 5.15(b).

UNITED STATES PATENT AND TRADEMARK OFFICE

Commissioner for Patents
United States Patent and Trademark Office
P.O. Box 1450
Alexandria, VA 22313-1450
www.uspto.gov

COPY MAILED

AUG 0 6 2007

OFFICE OF PETITIONS

FENWICK & WEST LLP
SILICON VALLEY CENTER
801 CALIFORNIA STREET
MOUNTAIN VIEW, CA 94041

In re Application of	:	
TRANDAL, et al.	:	
Application No. 10/795,025	:	DECISION ON PETITION
Filed: March 5, 2004	:	TO WITHDRAW
Attorney Docket No. **24072.08879**	:	FROM RECORD
	:	

This is a decision on the Request to Withdraw as attorney or agent of record under 37 C.F.R. § 1.36(b), filed April 2, 2007.

The request is **NOT APPROVED** as moot.

A review of the file record indicates that the power of attorney to **FENWICK & WEST LLP** has been revoked by the assignee of the patent application on June 28, 2007. Accordingly, the request to withdraw under 37 C.F.R. § 1.36(b) is moot.

All future communications from the Office will continue to be directed to the below-listed address until otherwise notified by applicant.

Telephone inquires concerning this decision should be directed to the undersigned at (571) 272-7253.

Monica A. Graves
Petitions Examiner
Office of Petitions

cc: **KNOBBE MARTENS OLSON & BEAR LLP**
2040 MAIN STREET, 14TH FLOOR
IRVINE, CA 92614

UNITED STATES PATENT AND TRADEMARK OFFICE

COMMISSIONER FOR PATENTS
UNITED STATES PATENT AND TRADEMARK OFFICE
P.O. BOX 1450
ALEXANDRIA, VA 22313-1450
www.uspto.gov

Chun-Pok Leung
TOWNSEND and TOWNSEND and CREW LLP
Two Embarcadero Center, 8th Floor
San Francisco, California 94111-3834

MAIL

SEP 2 8 2005

DIRECTOR OFFICE
TECHNOLOGY CENTER 2100

In re Application of:
Yuichi TAGUCHI et al
Application No. 10/795,028
Filed: March 11, 2004
For: METHOD AND APPARATUS FOR STORAGE NETWORK MANAGEMENT

DECISION ON PETITION TO MAKE SPECIAL

This is a decision on the petition, filed on August 1, 2005 under 37 C.F.R. §102(d) and M.P.E.P. § 708.02(VIII): Accelerated Examination, to make the above-identified application special.

The petition is **GRANTED**.

M.P.E.P. § 708.02, Section VIII which sets out the prerequisites for a grantable petition for Accelerated Examination under 37 C.F.R. § 102(d) states in relevant part:

> A new application (one which has not received any examination by the examiner) may be granted special status provided that applicant (and this term includes applicant's attorney or agent) complies with each of the following items:
>
> (A) Submits a petition to make special accompanied by the fee set forth in 37 CFR 1.17(h);
>
> (B) Presents all claims directed to a single invention, or if the Office determines that all the claims presented are not obviously directed to a single invention, will make an election without traverse as a prerequisite to the grant of special status;
>
> (C) Submits a statement(s) that a pre-examination search was made, listing the field of search by class and subclass, publication, Chemical Abstracts, foreign patents, etc. A search made by a foreign patent office satisfies this requirement;
>
> (D) Submits one copy each of the references deemed most closely related to the subject matter encompassed by the claims if said references are not already of record; and
>
> (E) Submits a detailed discussion of the references, which discussion points out, with the particularity required by 37 CFR 1.111 (b) and (c), how the claimed subject matter is patentable over the references.
>
> In those instances where the request for this special status does not meet all the prerequisites set forth above, applicant will be notified and the defects in the request will be stated. The application will remain in the status of a new application awaiting action in its regular turn. In

> those instances where a request is defective in one or more respects, applicant will be given one opportunity to perfect the request in a renewed petition to make special. If perfected, the request will then be granted. If not perfected in the first renewed petition, any additional renewed petitions to make special may or may not be considered at the discretion of the Group Special Program Examiner.

Applicant's submission of August 1, 2005 meets all the criteria set out above. Accordingly, the petition is **GRANTED**. The application file is being forwarded to the Examiner for accelerated examination in accordance with M.P.E.P. § 708.02. If the application is subsequently allowed, it will be given priority for printing. See M.P.E.P. § 1309.

Vincent N. Trans
Special Program Examiner
Technology Center 2100
Computer Architecture, Software, and
Information Security
571-272-3613

UNITED STATES PATENT AND TRADEMARK OFFICE

UNITED STATES DEPARTMENT OF COMMERCE
United States Patent and Trademark Office
Address: COMMISSIONER FOR PATENTS
P.O. Box 1450
Alexandria, Virginia 22313-1450
www.uspto.gov

QUARLES & BRADY LLP
411 E. WISCONSIN AVENUE
SUITE 2040
MILWAUKEE, WI 53202-4497

Mail Date: 04/20/2010

Applicant	: Stephen J. Riederer	: DECISION ON REQUEST FOR
Patent Number	: 7610076	: RECALCULATION of PATENT
Issue Date	: 10/27/2009	: TERM ADJUSTMENT IN VIEW
Appliction No	: 10/795,044	: OF WYETH AND NOTICE OF INTENT TO
Filed	: 03/05/2004	: ISSUE CERTIFICATE OF CORRECTION
		:

The Request for Recalculation is **GRANTED** to the extent indicated.

The patent term adjustment has been determined to be **1503** days. The USPTO will *sua sponte* issue a certificate of correction reflecting the amount of PTA days determined by the recalculation.

Prior to the issuance of the certificate of correction, the USPTO will afford patentee an opportunity to be heard and request reconsideration. Accordingly, patentee has **one month or thirty (30) days**, whichever is longer, to file a request for reconsideration of this patent term adjustment calculation. See 35 U.S.C. 154(b)(3)(B)(ii) and 37 CFR 1.322(a)(4). No extensions of time will be granted under 37 CFR 1.136.

Patentee should use document code PET.OP if electronically filing a request for reconsideration of this patent term adjustment calculation. The patentee must also include the information required by 37 CFR 1.705(b)(2) and the fee required by 37 CFR 1.18(e). If patentee does not file a timely request for reconsideration of this patent term adjustment calculation including the information required by 37 CFR 1.705(b)(2) and the fee required by 37 CFR 1.18(e), the USPTO will issue a certificate of correction reflecting the PTA determination noted above.

Patentee should be aware that in order to preserve the right to review in the United States District Court for the District of Columbia of the USPTO patent term adjustment determination, patentee must ensure that he or she also take the steps required under 35 U.S.C. 154(b)(4)(A) in a timely manner. Nothing in the request for recalculation should be construed as providing an alternative time frame for commencing a civil action under 35 U.S.C. 154(b)(4)(A).

Any questions concerning this decision should be directed to the Office of Patent Legal Administration at 571-272-7702.

UNITED STATES PATENT AND TRADEMARK OFFICE

UNITED STATES DEPARTMENT OF COMMERCE
United States Patent and Trademark Office
Address: COMMISSIONER FOR PATENTS
P.O. Box 1450
Alexandria, Virginia 22313-1450
www.uspto.gov

QUARLES & BRADY LLP
411 E. WISCONSIN AVENUE
SUITE 2040
MILWAUKEE, WI 53202-4497

Mail Date: 05/17/2010

Applicant : Stephen J. Riederer
Patent Number : 7610076
Issue Date : 10/27/2009
Application No : 10/795,044
Filed : 03/05/2004

: NOTICE CONCERNING IMPROPER
: CALCULATION OF PATENT TERM
: ADJUSTMENT BASED UPON USPTO
: IMPROPERLY MEASURING REDUCTION
: PERIOD UNDER 37 CFR 1.704(c)(10).

The United States Patent and Trademark Office (USPTO) discovered that in processing the recent recalculation decisions mailed in response to patentee's filed Request for Recalculation of Patent Term Adjustment in view of Wyeth, the USPTO improperly measured the reduction period for reductions under 37 CFR 1.704(c)(10). Pursuant to 37 CFR 1.704(c)(10), patentee's reduction begins on the date of filing the amendment under 37 CFR 1.312 ("1.312 amendment") or other related paper and ends on the date that the Office mails a response to the filing of the 1.312 amendment or other paper. It has been discovered that during the recalculation, the calculation failed to the limit the reduction to the mail date of the response to the 1.312 amendment or other paper. Accordingly, patentee's reductions were greater than warranted.

This notice **VACATES** the previous GRANTED request for recalculation and provides patentee with a revised GRANTED recalculation.

The patent term adjustment has been determined to be **1538** days. The USPTO will *sua sponte* issue a certificate of correction reflecting the amount of patent term adjustment (PTA) days determined by the recalculation.

Prior to the issuance of the certificate of correction, the USPTO will afford patentee an opportunity to be heard and request reconsideration. Accordingly, patentee has **one month or thirty (30) days** from the mail date of this notice, whichever is longer, to file a request for reconsideration of this PTA calculation. See 35 U.S.C. § 154(b)(3)(B)(ii) and 37 CFR 1.322(a)(4).

Patentee should use document code PET.OP if electronically filing a request for reconsideration of this PTA calculation. The patentee must also include the information required by 37 CFR 1.705(b)(2), and the fee required by 37 CFR 1.18(e). If patentee does not file a timely request for reconsideration of this PTA calculation, including the information required by 37 CFR 1.705(b)(2) and the fee required by 37 CFR 1.18(e), the USPTO will issue a certificate of correction reflecting the PTA determination noted above.

Patentee should be aware that in order to preserve the right of review of the USPTO's PTA determination in the United States District Court for the District of Columbia, patentee must ensure that the steps required under 35 U.S.C. § 154 (b)(4) are taken in a timely manner. Nothing in the request for recalculation should be construed as providing an alternative time frame for commencing a civil action under 35 U.S.C. § 154(b)(4).

UNITED STATES PATENT AND TRADEMARK OFFICE

Commissioner for Patents
United States Patent and Trademark Office
P.O. Box 1450
Alexandria, VA 22313-1450
www.uspto.gov

COPY MAILED
MAR 17 2008

PERKINS COIE LLP
P.O. BOX 2168
MENLO PARK CA 94026

In re Application of	:	
Wu, et al, t	:	
Application No. 10/795,048	:	DECISION
Filed: 4 March, 2004	:	
Attorney Docket No. 37469-8059.US01	:	

This is a decision on the renewed petition filed on 29 October, 2007, and considered as a request to withdraw the holding of abandonment under 37 C.F.R. §1.181.

> NOTE: The Revocation/Power of Attorney submitted on 5 February and again on 20 October, 2007, is not proper in that it does not appear that there has been a re-assignment of the interest, nor is the Revocation/Power of Attorney executed by an authorized officer of the assignee and there is no certificate under 37 C.F.R. §3.373(b).
>
> As a result, there is no indication that Petitioner herein was ever empowered to prosecute the instant application. If Petitioner desires to receive future correspondence regarding this application, the appropriate power of attorney documentation must be submitted. A courtesy copy of this decision will be mailed to Petitioner. However, all future correspondence will be directed to the address of record until such time as appropriate instructions are received to the contrary.

The petition as considered under 37 C.F.R. §1.181 is **GRANTED**.

BACKGROUND

The record reflects that:

- Petitioner failed to reply timely and properly to the Restriction Requirement mailed on 9 January, 2007, with reply due absent extension of time on or before 9 February, 2007;

- the application went abandoned after midnight 9 February, 2007;
- the Office mailed the Notice of Abandonment on 17 August, 2007;
- on 29 October, 2007, Petitioner filed the instant petition with, *inter alia*, a copy of the reply in the form of an Election averred to have been filed on 5 February, 2007, a copy of Petitioner's FAX machine record of transmission;
- the image file wrapper (IFW) now indicates timely filing of the Election reply by Petitioner on 5 February, 2007.

Petitioner is cautioned as follows:

- *as noted above, the Revocation/Power of Attorney previously submitted is insufficient;*
- *Petitioner failed (by 12 days) to file within two months of the act complained of (i.e., Notice of Abandonment);*
- *Petitioner failed to submit as evidence of timely filing of the reply to the earlier Office action the FAX receipt acknowledgement generated by the Office FAX system and sent to Petitioner upon any FAX filing at the proper FAX line (571-273-8300;*
- *Petitioner apparently was not attentive to the guidance set forth in the Commentary at MPEP §711.03 (c), as to the documents in support of/and the statements required for the showing herein.*

The statutes and rules of practice (e.g., 37 C.F.R. §1.4, §1.8 and §1.10) provide many benefits, avenues for action and methods of protection for applicants, patentees, assignees, practitioners and others to accomplish tasks before the Office.

However, persons who fail to utilize those statutes and rules fail to succeed in their tasks or obtain those benefits and protections.

The guidance in the Commentary MPEP §711.03 (c)(I)(C)(3) provides in pertinent part:

***

> In utility and plant applications filed on or after May 29, 2000, a terminal disclaimer should **not** be required as a condition of granting an untimely petition to withdraw the holding of abandonment. This is because <u>any patent term adjustment is automatically reduced under the provisions of 37 C.F.R. §704(c)(4) in applications subject to the patent term adjustment provisions of the American Inventors Protection Act of 1999 (AIPA) if a petition to withdraw a holding of abandonment is not filed within two months from the mailing date of the notice of abandonment</u>, and if applicant does not receive the

> notice of abandonment, any patent term adjustment is reduced under the provisions of 37 C.F.R. §704(a) by a period equal to the period of time during which the applicant "failed to engage in reasonable efforts to conclude prosecution" (processing or examination) of the application.
>
> ***

The availability of applications and application papers online to applicants/practitioners who diligently associate their Customer Number with the respective application(s) now provides an applicant/practitioner on-demand information as to events/transactions in an application. Thus, now if one wishes to know the progress in and/or status of an application or the accuracy of the data therein, one need only look at the file online.

Out of an abundance of caution, Petitioners always are reminded that the filing of a petition under 37 C.F.R. §1.181 does not toll any periods that may be running any action by the Office and a petition seeking relief under the regulation must be filed within two (2) months of the act complained of (see: 37 C.F.R. §1.181(f)), and that those registered to practice and all others who make representations before the Office are reminded to inquire into the underlying facts of representations made to the Office and support averments with the appropriate documentation– since all owe to the Office the continuing duty to disclose.[1]

STATUTES, REGULATIONS AND ANALYSIS

Congress has authorized the Commissioner to "revive an application if the delay is shown to the satisfaction of the Commissioner to have been "unavoidable." 35 U.S.C. §133 (1994).[2]

The regulations at 37 C.F.R. §1.137(a) and (b) set forth the requirements for a petitioner to revive a previously unavoidably or unintentionally, respectively, abandoned application under this congressional grant of authority.

The language of 35 U.S.C. §133 and 37 C.F.R. §1.137(a) is clear, unambiguous, and without qualification: the delay in tendering the reply to the outstanding Office action, as well as filing the first petition seeking revival, must have been unavoidable for the reply now to be accepted on petition.[3]

---

[1] See supplement of 17 June, 1999. The Patent and Trademark Office is relying on petitioner's duty of candor and good faith and accepting a statement made by Petitioner. See Changes to Patent Practice and Procedure, 62 Fed. Reg. at 53160 and 53178, 1203 Off. Gaz. Pat. Office at 88 and 103 (responses to comments 64 and 109)(applicant obligated under 37 C.F.R. §10.18 to inquire into the underlying facts and circumstances when providing statements to the Patent and Trademark Office).

[2] 35 U.S.C. §133 provides:

35 U.S.C. §133 Time for prosecuting application.

Upon failure of the applicant to prosecute the application within six months after any action therein, of which notice has been given or mailed to the applicant, or within such shorter time, not less than thirty days, as fixed by the Commissioner in such action, the application shall be regarded as abandoned by the parties thereto, unless it be shown to the satisfaction of the Commissioner that such delay was unavoidable.

[3] See: *Changes to Patent Practice and Procedure*; *Final Rule Notice*, 62 *Fed. Reg.* at 53158-59 (October 10, 1997), 1203 *Off. Gaz. Pat. Office* at 86-87 (October 21, 1997).

Delays in responding properly raise the question whether delays are unavoidable. Where there is a question whether the delay was unavoidable, Petitioners must meet the burden of establishing that the delay was unavoidable within the meaning of 35 U.S.C. §133 and 37 C.F.R. §1.137(a).[4]

And the Petitioner must be diligent in attending to the matter.[5] Failure to do so does not constitute the care required under Pratt, and so cannot satisfy the test for diligence and due care. (By contrast, unintentional delays are those that do not satisfy the very strict statutory and regulatory requirements of unavoidable delay, and also, by definition, are not intentional.[6]))

Allegations as to the Request to
Withdraw the Holding of Abandonment

The courts have determined the construct for properly supporting a petition seeking withdrawal of a holding of abandonment.[7] (See the commentary at MPEP §711.03(c)(A) and (B).

And the regulation requires that relief be sought within two (2) months of the act complained of.

Petitioner appears to have satisfied the burdens herein.

CONCLUSION

Petitioner appears to have satisfied the burdens herein, and the petition as considered under 37 C.F.R. §1.181 is **granted**; the 17 August, 2007, Notice of Abandonment is **vacated**.

The instant application is released to Technology Center/AU 3782 for further processing in due course.

Petitioner may find it beneficial to view Private PAIR within a fortnight of the instant decision to ensure that the revival has been acknowledged by the Technology Center/AU in response to this decision—and it is noted that all inquiries with regard to any failure of that change in status should be directed to the Technology Center where that change of status must be effected.

---

[4] See: In re Application of G, 11 USPQ2d 1378, 1380 (Comm'r Pats. 1989).

[5] See: Diligence in Filing Petitions to Revive and Petitions to Withdraw the Holding of Abandonment, 1124 Off. Gaz. Pat. Office 33 (March 19, 1991). It was and is Petitioner's burden to exercise diligence in seeking either to have the holding of abandonment withdrawn or the application revived. See 1124 Off. Gaz. Pat. Office supra.

[6] Therefore, by example, an unintentional delay in the reply might occur if the reply and transmittal form are to be prepared for shipment by the US Postal Service, but other pressing matters distract one's attention and the mail is not timely deposited for shipment.

[7] See: Delgar v. Schulyer, 172 USPQ 513 (D.D.C. 1971).

While telephone inquiries regarding this decision may be directed to the undersigned at (571) 272-3214, it is noted that all practice before the Office is in writing (see: 37 C.F.R. §1.2[8]) and the proper authority for action on any matter in this regard are the statutes (35 U.S.C.), regulations (37 C.F.R.) and the commentary on policy (MPEP). Therefore, no telephone discussion may be controlling or considered authority for Petitioner's action(s).

John J. Gillon, Jr.
Senior Attorney
Office of Petitions

cc:
CHARLES R. DUCKER, JR.
LEGAL DEPARTMENT
SUNBEAM PRODUCTS INC.
2381 EXECUTIVE CENTER DRIVE
BOCA RATON, FL 33431

---

[8] The regulations at 37 C.F.R. §1.2 provide:
§1.2 Business to be transacted in writing.
All business with the Patent and Trademark Office should be transacted in writing. The personal attendance of applicants or their attorneys or agents at the Patent and Trademark Office is unnecessary. The action of the Patent and Trademark Office will be based exclusively on the written record in the Office. No attention will be paid to any alleged oral promise, stipulation, or understanding in relation to which there is disagreement or doubt.

UNITED STATES PATENT AND TRADEMARK OFFICE

Commissioner for Patents
United States Patent and Trademark Office
P.O. Box 1450
Alexandria, VA 22313-1450
www.uspto.gov

WOOD HERRON & EVANS, LLP
2700 CAREW TOWER
441 VINE STREET
CINCINNATI, OH 45202

COPY MAILED

APR 25 2006

OFFICE OF PETITIONS

ON PETITION

In re Application of	:	
Edward Vincent Louis	:	
Application No. 10/795,055	:	
Filed: March 5, 2004	:	
Attorney Docket No. ANCO / 84US1	:	

This is a decision on the petition under 37 CFR 1.137(b), filed December 16, 2005 to revive the above-identified application.

The petition is **GRANTED.**

The above-identified application became abandoned for failure to submit the Issue fee in a timely manner in reply to the Notice of Allowance mailed September 13, 2005, which set a statutory period for reply of three (3) months. Accordingly, the above-identified application became abandoned on December 14, 2005.

The petition satisfies the conditions for revival pursuant to the provisions of 37 CFR 1.137(b) in that (1) the reply in the form of payment of the issue fee; (2) the petition fee; and (3) the required statement of unintentional delay have been received. Accordingly, the issue fee is accepted as having been unintentionally delayed.

Telephone inquiries concerning this decision should be directed to the undersigned at (571) 272-3210.

This matter is being referred to the Publishing Division for further processing.

Irvin Dingle
Petitions Examiner
Office of Petitions

UNITED STATES PATENT AND TRADEMARK OFFICE

Commissioner for Patents
United States Patent and Trademark Office
P.O. Box 1450
Alexandria, VA 22313-1450
www.uspto.gov

Paper No. 062105

RICHARD K THOMSON, ATTORNEY
7691 Fairlane Drive
Fairview, PA 16415

JUL 07 2005

In re Application of:	:	
Gorniak, Jerry T.	:	DECISION ON PETITION
Serial No.: 10/795,056	:	TO MAKE SPECIAL
Filed: March 05, 2004	:	
Attorney Docket No.: **AD#-158**	:	

This is a decision on the petition under 37 C.F.R. § 1.102(c), filed May 17, 2005, to make the above-identified application special.

Petitioner requests that the above-identified application be made special under the accelerated examination procedure set forth in the Manual of Patent Examining Procedure (M.P.E.P.) § 708.02, Section IV: Applicant's Age.

A grantable petition to make special under 37 C.F.R. § 1.102, and in accordance with M.P.E.P. § 708.02, Section IV, must include evidence showing that the applicant is sixty five (65) years of age or more. No fee is required for this petition.

The petition includes a declaration from Jerry T. Gorniak, stating that the he is sixty-five (65) years of age or more.

Accordingly, the petition is GRANTED.

After allowance, this application will be given priority for printing. See M.P.E.P. § 1309.

Inquiries regarding this decision should be directed to Clayton LaBalle at (571) 272-1594.

Clayton E. LaBalle, Special Programs Examiner
Technology Center 2800
Semiconductors, Electrical and Optical
Systems and Components

UNITED STATES PATENT AND TRADEMARK OFFICE

COMMISSIONER FOR PATENTS
UNITED STATES PATENT AND TRADEMARK OFFICE
P.O. BOX 1450
ALEXANDRIA, VA 22313-1450
www.uspto.gov

Lawrence Rosenthal
Stroock & Stroock & Lavan LLP
180 Maiden Lane
New York, NY 10038

COPY MAILED
MAY 17 2006
OFFICE OF PETITIONS

In re Application of	:	
Kurtz	:	DECISION ON PETITION
Application No. 10/795,069	:	
Filed: March 5, 2004	:	
Docket No.: 338435/0002	:	

This is a decision on the petition to withdraw the holding of abandonment under 37 CFR 1.181, and, alternatively, under 37 CFR 1.137(b), filed February 16, 2006.

This application was held abandoned December 28, 2005 for failure to timely submit a proper reply to the Notice of Allowance mailed May 20, 2005. Notice of Abandonment was mailed February 2, 2006.

Petitioner asserts that a response to the Notice of Allowance was timely submitted and received by the USPTO, albeit, at the incorrect facsimile number. Petitioner further argues that in accordance with MPEP 502.01, Office personnel that inadvertently receive official application related correspondence on a personal facsimile number must either route (do not forward) the correspondence to the official central facsimile number or they may, with applicant's (or applicant's representative) permission, make the facsimile amendment part of an examiner's amendment.

Petitioner's arguments have been carefully considered and found convincing.

The original response submitted December 22, 2005 has not been located. However, in view of the evidence presented, the petition under 37 CFR 1.181 to withdraw the holding of abandonment is hereby **GRANTED** and the alternative petition under 3 CFR 1.137 is hereby **DISMISSED AS MOOT**.

The Notice of Abandonment is hereby **VACATED** and the holding of abandonment is **WITHDRAWN**.

The application file is being forwarded to the Office of Patent Publication for further processing.

Telephone inquiries concerning this matter may be directed to the undersigned at (571) 272-3205.

Alesia M. Brown
Petitions Attorney
Office of Petitions

UNITED STATES PATENT AND TRADEMARK OFFICE

Commissioner for Patents
United States Patent and Trademark Office
P.O. Box 1450
Alexandria, VA 22313-1450
www.uspto.gov

SEP 20 2004

In re Application of	:
Costas Vogiatzis	:
Application No. 10/795,075	: DECISION ON PETITION
Filed: March 5, 2004	:
Attorney Docket No. H0004283 CIP	:

This is a decision on the petition to make special filed on March 5, 2004. The petition is based upon the practice described in MPEP § 708.02(V) "Environmental Quality" and MPEP § 708.02(VI) "Energy." Therefore, no petition fee is required.

The petition is granted.

The petition to make special based upon the practice in the above mentioned MPEP sections is deemed to satisfy all of the requirements thereof. Accordingly, the examiner will treat this application as special throughout its prosecution. Prior to the next action on the merits, the examiner will conduct a rigorous search for potentially interfering applications. The interference search will be brought up to date prior to each successive action.

The Supervisory Patent Examiner of Patent Examining Art Unit 3745 is being informed of this decision, and will advise the examiner to take future action consistent therewith. The granting of this petition is not to be taken as an endorsement of the invention that is disclosed and claimed.

PETITION GRANTED.

Stephen Marcus, Special Program Examiner
Technology Center 3700

EPHRAIM STARR, DIVISION GENERAL COUNSEL
HONEYWELL INTERNATIONAL INC.
23326 HAWTHORNE BOULEVARD
SUITE #200
TORRANCE, CA 90505

UNITED STATES PATENT AND TRADEMARK OFFICE

COMMISSIONER FOR PATENTS
UNITED STATES PATENT AND TRADEMARK OFFICE
P.O. BOX 1450
ALEXANDRIA, VA 22313-1450
www.uspto.gov

DORSEY & WHITNEY LLP
555 CALIFORNIA STREET, SUITE 1000
SUITE 1000
SAN FRANCISCO, CA 94104

COPY MAILED

MAY 2 6 2006

OFFICE OF PETITIONS

In re Application of	:	
Max W. Durney, et al.	:	
Application No. 10/795,077	:	ON PETITION
Filed: March 3, 2004	:	
Atty Docket No.: 34093/US A-69466-4/RBC 47	:	

This is a decision on the petition, filed May 19, 2006, under 37 CFR 1.313(c)(2) to withdraw the above-identified application from issue after payment of the issue fee.

The petition is **GRANTED**.

The above-identified application is withdrawn from issue for consideration of a submission under 37 CFR 1.114 (request for continued examination). See 37 CFR 1.313(c)(2).

Petitioner is advised that the issue fee paid on March 23, 2006, in the above-identified application cannot be refunded. If, however, the above-identified application is again allowed, petitioner may request that it be applied towards the issue fee required by the new Notice of Allowance. [1]

Telephone inquiries relating to this decision should be directed to the undersigned at (571) 272-3204.

The application is being referred to Technology Center AU 3725 for further processing of the request for continued examination under 37 CFR 1.114.

Sherry D. Brinkley
Petitions Examiner
Office of Petitions

[1]The request to apply the issue fee to the new Notice may be satisfied by completing and returning the new Issue Fee Transmittal Form PTOL-85(b), which includes the following language thereon: "Commissioner for Patents is requested to apply the Issue Fee and Publication Fee (if any) or re-apply any previously paid issue fee to the application identified above." Petitioner is advised that, whether a fee is indicated as being due or not, the Issue Fee Transmittal Form **must** be completed and timely submitted to avoid abandonment. Note the language in bold text on the first page of the Notice of Allowance and Fee(s) Due (PTOL-85).

UNITED STATES PATENT AND TRADEMARK OFFICE

UNITED STATES DEPARTMENT OF COMMERCE
United States Patent and Trademark Office
Address: COMMISSIONER FOR PATENTS
P.O. Box 1450
Alexandria, Virginia 22313-1450
www.uspto.gov

APPL NO.	FILING OR 371 (c) DATE	ART UNIT	FIL FEE REC'D	ATTY.DOCKET NO.	DRAWINGS	TOT CLMS	IND CLMS
10/795,079	03/03/2004	2155	0.00	32021-07761	4	63	9

CONFIRMATION NO. 6598

CORRECTED FILING RECEIPT

OC000000013263029

00758
FENWICK & WEST LLP
SILICON VALLEY CENTER
801 CALIFORNIA STREET
MOUNTAIN VIEW, CA 94041

Date Mailed: 07/16/2004

Receipt is acknowledged of this regular Patent Application. It will be considered in its order and you will be notified as to the results of the examination. Be sure to provide the U.S. APPLICATION NUMBER, FILING DATE, NAME OF APPLICANT, and TITLE OF INVENTION when inquiring about this application. Fees transmitted by check or draft are subject to collection. Please verify the accuracy of the data presented on this receipt. **If an error is noted on this Filing Receipt, please write to the Office of Initial Patent Examination's Filing Receipt Corrections, facsimile number 703-746-9195. Please provide a copy of this Filing Receipt with the changes noted thereon. If you received a "Notice to File Missing Parts" for this application, please submit any corrections to this Filing Receipt with your reply to the Notice. When the USPTO processes the reply to the Notice, the USPTO will generate another Filing Receipt incorporating the requested corrections (if appropriate).**

Applicant(s)

Brett M. Error, Orem, UT;
Christopher Reid Error, Orem, UT;
Christopher Luby, Lehi, UT;

Domestic Priority data as claimed by applicant

Foreign Applications

If Required, Foreign Filing License Granted: 05/25/2004

Projected Publication Date: To Be Determined - pending completion of Missing Parts

Non-Publication Request: No

Early Publication Request: No

**** SMALL ENTITY ****

Title

Delayed transmission of website usage data

Preliminary Class
709

LICENSE FOR FOREIGN FILING UNDER
Title 35, United States Code, Section 184
Title 37, Code of Federal Regulations, 5.11 & 5.15

GRANTED

The applicant has been granted a license under 35 U.S.C. 184, if the phrase "IF REQUIRED, FOREIGN FILING LICENSE GRANTED" followed by a date appears on this form. Such licenses are issued in all applications where the conditions for issuance of a license have been met, regardless of whether or not a license may be required as set forth in 37 CFR 5.15. The scope and limitations of this license are set forth in 37 CFR 5.15(a) unless an earlier license has been issued under 37 CFR 5.15(b). The license is subject to revocation upon written notification. The date indicated is the effective date of the license, unless an earlier license of similar scope has been granted under 37 CFR 5.13 or 5.14.

This license is to be retained by the licensee and may be used at any time on or after the effective date thereof unless it is revoked. This license is automatically transferred to any related applications(s) filed under 37 CFR 1.53(d). This license is not retroactive.

The grant of a license does not in any way lessen the responsibility of a licensee for the security of the subject matter as imposed by any Government contract or the provisions of existing laws relating to espionage and the national security or the export of technical data. Licensees should apprise themselves of current regulations especially with respect to certain countries, of other agencies, particularly the Office of Defense Trade Controls, Department of State (with respect to Arms, Munitions and Implements of War (22 CFR 121-128)); the Office of Export Administration, Department of Commerce (15 CFR 370.10 (j)); the Office of Foreign Assets Control, Department of Treasury (31 CFR Parts 500+) and the Department of Energy.

NOT GRANTED

No license under 35 U.S.C. 184 has been granted at this time, if the phrase "IF REQUIRED, FOREIGN FILING LICENSE GRANTED" DOES NOT appear on this form. Applicant may still petition for a license under 37 CFR 5.12, if a license is desired before the expiration of 6 months from the filing date of the application. If 6 months has lapsed from the filing date of this application and the licensee has not received any indication of a secrecy order under 35 U.S.C. 181, the licensee may foreign file the application pursuant to 37 CFR 5.15(b).

UNITED STATES PATENT AND TRADEMARK OFFICE

Commissioner for Patents
United States Patent and Trademark Office
P.O. Box 1450
Alexandria, VA 22313-1450
www.uspto.gov

RAUBVOGEL LAW OFFICE
820 LAKEVIEW WAY
REDWOOD CITY, CA 94062

MAILED

APR 09 2010

OFFICE OF PETITIONS

In re Application of	:	
Error et al.	:	DECISION ON PETITION
Application No. 10/795,079	:	TO WITHDRAW
Filed: March 3, 2004	:	FROM RECORD
Attorney Docket No. OMN7761	:	

This is a decision on the Request to Withdraw as attorney or agent of record under 37 C.F.R. § 1.36(b), filed February 4, 2010.

The request is **NOT APPROVED** because it is moot.

A review of the file record indicates that on February 22, 2010 the power of attorney to Raubvogel Law Office was revoked by the assignee of the patent application. Accordingly, the request to withdraw under 37 C.F.R. § 1.36(b) is moot.

All future communications from the Office will be directed to the below-listed address until otherwise notified by applicant.

Telephone inquires concerning this decision should be directed to the undersigned at 571-272- 7751. All other inquires concerning either the examination or status of the application should be directed to the Technology Center.

Joan Olszewski

Joan Olszewski
Petitions Examiner
Office of Petitions

cc: M.H.K.K.G., P.C. / ADOBE SYSTEMS INCORPORATED
P.O. BOX 398
AUSTIN TX 78767-0398

UNITED STATES PATENT AND TRADEMARK OFFICE

Commissioner for Patents
United States Patent and Trademark Office
P.O. Box 1450
Alexandria, VA 22313-1450
www.uspto.gov

WOOD, HERRON & EVANS, LLP (TOKYO ELECTRON)
2700 CAREW TOWER
441 VINE STREET
CINCINNATI, OH 45202

COPY MAILED
MAR 02 2010

In re Application of Robison et al. :
Application No. 10/795,093 : Decision on Petition
Filing Date: March 5, 2004 :
Attorney Docket No. TAZ-218CIP :

This is a decision on the petition under 37 C.F.R. § 1.182, filed May 4, 2009, which requests that the terminal disclaimer filed on June 15, 2007, be withdrawn. The petition also requests withdrawal of two priority claims.

The petition is **granted to the extent indicated herein.**

The terminal disclaimer filed on June 15, 2007, is withdrawn.

It should be noted that this decision is not a determination that the subject matter of the current claims is distinct from the claims in the patents and/or applications to which the terminal disclaimer applied.[1] The examiner is not precluded, upon review of the record, to institute a double patenting rejection regarding the claims should he feel that such action is proper and necessary.

The petition to withdraw the priority claims is not granted in so far as a petition is not the proper vehicle to delete the priority claims at issue. If petitioner wishes to delete the priority claims, petitioner should file a formal amendment deleting the priority claims.

Technology Center Art Unit 1795 will be informed of the instant decision and the application will be further examined in due course.

[1] It is the long-established policy of the Patent and Trademark Office to maintain the line of demarcation between petitionable and appealable subject matter. MPEP 1201. When the question of whether or not a given set of claims in one application or patent is distinct, or lies within the aegis of 35 USC 121, from another set of claims in another application or patent with respect to obviousness double patenting arises, that question relates to the merits of an invention, and the appropriate remedy for resolution of that issue ultimately lies by appeal as provided by statute. See e.g. In re Longi, 759 F.2d 887, 225 USPQ 645 (Fed. Cir. 1985). As noted by the court in In re Faust, 378 F.2d 966, 153 USPQ 813 (CCPA 1967) "the terminal disclaimer eliminates the necessity of considering what are most often exceedingly difficult questions. i.e., whether the subject matter of the appealed claims is obvious in view of the patent claims relied on as the basis for 'double patenting,' thus conserving judicial man hours both here and in the Patent Office." Further, it is well settled that the Commissioner will not, on petition, usurp the functions or impinge upon the jurisdiction of the Board. See In re Dickerson, 299 F.2d 954, 958, 133 USPQ 39, 43 (CCPA 1962); Bayley's Restaurant v. Bailey's of Boston, Inc., 170 USPQ 43, 44 (Comm'r Pat. 1971).

Telephone inquiries regarding this communication should be directed to Petitions Attorney Steven Brantley at (571) 272-3203.

Charles Steven Brantley
Senior Petitions Attorney
Office of Petitions

UNITED STATES PATENT AND TRADEMARK OFFICE

UNITED STATES DEPARTMENT OF COMMERCE
United States Patent and Trademark Office
Address: COMMISSIONER FOR PATENTS
P.O. Box 1450
Alexandria, Virginia 22313-1450
www.uspto.gov

APPLICATION NO.	FILING DATE	FIRST NAMED INVENTOR	ATTORNEY DOCKET NO.	CONFIRMATION NO.
10/795,095	03/05/2004	Louis H. Bookbinder	119374-00002 / 3051	7700

77202 7590 06/02/2009
K&L Gates LLP
3580 Carmel Mountain Road
Suite 200
San Diego, CA 92130

EXAMINER
KOSSON, ROSANNE

ART UNIT	PAPER NUMBER
1652	

MAIL DATE	DELIVERY MODE
06/02/2009	PAPER

Please find below and/or attached an Office communication concerning this application or proceeding.

The time period for reply, if any, is set in the attached communication.

UNITED STATES PATENT AND TRADEMARK OFFICE

Commissioner for Patents
United States Patent and Trademark Office
P.O. Box 1450
Alexandria, VA 22313-1450
www.uspto.gov

JUN 02 2009

Stephanie Seidman
K&L Gates, LLP
3580 Carmel Mountain Road
Suite 200
San Diego, CA 92130

In re Application of:	:
Bookbinder et al.	:
Serial No.: 10/795,095	: PETITION DECISION
Filed: March 05, 2004	:
Attorney Docket No.: **119374-00002 / 3051**	:

This is in response to the petition under 37 CFR § 1.181, filed May 11, 2009, requesting that the finality of the Office action of April 14, 2009 be withdrawn.

BACKGROUND

The prosecution history will be reviewed only as it pertains to the two rejections under 35 U.S.C. § 103(a) discussed in the petition.

On August 20, 2008, the examiner mailed to applicants a non-final Office action containing a rejection of claims 1, 3-12, 20, 23, 89-92, 95-102, 105-108, 110, 111, 123-126, 129-136, 138, 139, 147, 162-166, 168-172, 174-176, and 179-184 under 35 U.S.C. § 103(a) as being unpatentable over Lin et al., Primakoff et al., and Stern et al. in view of DeFrees et al., Zalipsky and Lee, Afify et al., Frudakis et al., and Cumer et al.

On February 20, 2009, applicants submitted an amendment in which claims 2, 4-10, 13-19, 21, 22, 24-88, 103, 104, 116-122, 128, 139-161, 165, 166, 169, 172, 173, 177, and 182-185 were canceled; claims 1, 3, 11, 12, 20, 23, 89-91, 93, 98-101, 106, 107, 136, 162-164, 167, 168, and 174-176 were amended; and claims 186-192 were added. The amendment also contained remarks traversing the rejection under 35 U.S.C. § 103(a).

On April 14, 2009, the examiner mailed to applicants a final Office action containing a rejection of claims 1, 3, 11, 12, 20, 23, 89-92, 95-102, 105-108, 110, 111, 123-126, 129-136, 138, 162-164, 168, 170, 171, 174-176, 179-181, 186, 187, 191, and 192 under 35 U.S.C. § 103(a) as being unpatentable over Lin et al., Primakoff et al., and Stern et al. in view of DeFrees et al., Zalipsky and Lee, Afify et al., Frudakis et al., Cumer et al., and Lathrop et al.

On May 11, 2009, applicants submitted the petition under consideration herein.

DISCUSSION

The petition and the file history have been carefully considered.

In the petition, applicants argue that the rejection under 35 U.S.C. § 103(a) made in the final Office action was a new grounds of rejection that was not necessitated by amendment. Specifically, applicants argue that some of the claims that were examined for the non-final Office action recited truncated fragments, pointing to claim 166 as an example. Applicants thus disagree with the examiner's allegation that the amendments to the claims reciting fragments necessitated the new grounds of rejection. Applicants argue that the limitations of previous claim 166 were incorporated into amended claim 1, such that any grounds of rejection made against amended claim 1 could have been made against previous claim 166. Applicants further point to previous claims 23, 162, 163, and 165 as reciting fragments.

Previous claims 23, 162, 163, 165, and 166 (submitted July 7, 2008) are reproduced here:

23. (Previously presented) The substantially purified glycoprotein of claim 1 that has the sequence of amino acids set forth in SEQ ID NO. 4.

162. (Previously presented) A substantially purified glycoprotein of claim 1, wherein the polypeptide is encoded by a nucleic acid molecule that encodes amino acids 36-482 of SEQ ID NO:1.

163. (Previously presented) A substantially purified glycoprotein of claim 1, wherein the polypeptide is encoded by a nucleic acid molecule that encodes amino acids 1-482 of SEQ ID NO:1.

165. (Previously presented) The substantially purified glycoprotein of claim 1, wherein the polypeptide includes a sequence of amino acids set forth in SEQ ID NO:1 that is truncated at an amino acid residue that is or is between amino acid residues 467 to 483.

166. (Previously presented) The substantially purified glycoprotein of claim 1, wherein the polypeptide includes a sequence of amino acids set forth in SEQ ID NO:1 that is truncated at an amino acid residue selected from among 467, 477, 478, 479, 480, 481, 482 and 483.

As the examiner mentioned in the non-final Office action mailed August 20, 2008, at p. 15, third paragraph, each of the above claims recites open claim language. Claim 23 recites "has" which is interpreted as "comprising." Claim 162 recites "encodes" which is also open. For example, a nucleic acid that "encodes" a peptide of 100 amino acids also encodes portions of that peptide. Claims 165 and 166 recite "includes" which is open. Even if the "included" portion is truncated, the claimed glycoprotein could also include the remaining amino acid residues. Current claim 1, as set forth below, on the other hand, is clearly closed and limited to truncated peptides since it recites "consists of":

1. (Currently amended) A substantially purified hyaluronidase glycoprotein, wherein the hyaluronidase glycoprotein:

is soluble;

~~comprising a~~ is neutral active;

~~soluble hyaluronidase polypeptide that~~ contains at least one ~~N-linked~~ sugar moiety~~,~~ ~~wherein:~~ that is ~~the N-linked sugar moiety is~~ covalently attached to an asparagine (N) residue of the polypeptide; and

~~the substantially purified glycoprotein comprises~~ consists of the ~~a~~ sequence of amino acids set forth as amino acids 1-477, 36-477, 1-478, 36-478, 1-479, 36-479, 1-480, 36-480, 1-481, 36-481, 1-482, 36-482, 1-483 or 36-483 ~~included in~~ set forth in SEQ ID NO:1 or consists of a sequence of amino acids that has at least ~~about 91%~~ 95% amino acid sequence identity with ~~a~~ the sequence of amino acids set forth as amino acids 1-477, 36-477, 1-478, 36-478, 1-479, 36-479, 1-480, 36-480, 1-481, 36-481, 1-482, 36-482, 1-483 or 36-483 ~~included in~~ of SEQ ID NO. 1~~; and~~

~~the substantially purified glycoprotein is soluble~~.

Therefore, the previous claims were not limited to fragments, and applicants' argument is not convincing.

Applicants further argue that previous claim 1 did not read on a full-length polypeptide since it recited a soluble polypeptide. Applicants urge that the references relied upon in the rejection under 35 U.S.C. § 103(a) in the non-final Office action mailed August 20, 2008 were limited to a full-length polypeptide which is a GPI anchored protein and, as such, is not soluble. However, DeFrees et al. were relied upon in the rejection as suggesting maintaining/restoring glycosylation to improve solubility. Furthermore, Primakoff et al. teach isolating the protein from the membranes to make a vaccine. See col. 4, lines 20-44. Similarly, Stern et al. suggest using liposomes to improve solubility. See col. 27, lines 7-24. Therefore, contrary to applicants' arguments, the previous claims read on full-length polypeptides since solubility-enhancement procedures were suggested by the combined teachings of the references. Thus, this argument is not persuasive.

DECISION

The petition is subsequently **DENIED**.

The shortened statutory time period for response to the final Office action continues to run three months from the mailing date thereof (April 14, 2009). Extensions of time may be available under the provisions of 37 C.F.R. § 1.136(a).

Any new or renewed petition must be filed within TWO MONTHS of the mail date of this decision.

Should there be any questions about this decision please contact Quality Assurance Specialist Marianne C. Seidel, by letter addressed to Director, TC 1600, at the address listed above, or by telephone at 571-272-0584 or by facsimile sent to the general Office facsimile number, 703-872-9306.

Remy Yucel
Director, Technology Center 1600

UNITED STATES PATENT AND TRADEMARK OFFICE

UNITED STATES DEPARTMENT OF COMMERCE
United States Patent and Trademark Office
Address: COMMISSIONER FOR PATENTS
P.O. Box 1450
Alexandria, Virginia 22313-1450
www.uspto.gov

APPLICATION NO.	FILING DATE	FIRST NAMED INVENTOR	ATTORNEY DOCKET NO.	CONFIRMATION NO.
10/795,095	03/05/2004	Louis H. Bookbinder	119374-00002 / 3051	7700

77202 7590 07/17/2009
K&L Gates LLP
3580 Carmel Mountain Road
Suite 200
San Diego, CA 92130

EXAMINER
KOSSON, ROSANNE

ART UNIT	PAPER NUMBER
1652	

MAIL DATE	DELIVERY MODE
07/17/2009	PAPER

Please find below and/or attached an Office communication concerning this application or proceeding.

The time period for reply, if any, is set in the attached communication.

UNITED STATES PATENT AND TRADEMARK OFFICE

Commissioner for Patents
United States Patent and Trademark Office
P.O. Box 1450
Alexandria, VA 22313-1450
www.uspto.gov

JUL 1 7 2009

Stephanie Seidman
K&L Gates, LLP
3580 Carmel Mountain Road
Suite 200
San Diego, CA 92130

In re Application of:	:
Bookbinder et al.	:
Serial No.: 10/795,095	: PETITION DECISION
Filed: March 05, 2004	:
Attorney Docket No.: 0119374-00002/3051	:

This is in response to the request for reconsideration of petition under 37 CFR § 1.181, filed June 29, 2009, requesting that the finality of the Office action of April 14, 2009 be withdrawn.

BACKGROUND

The prosecution history was reviewed in the decision on petition mailed June 2, 2009.

DISCUSSION

The petition and the file history have been carefully considered.

In the renewed petition, applicants argue that claim 166 as previously pending clearly did not read on the full-length SEQ ID NO: 1 because it is truncated. This has been fully considered but is not found to be persuasive since claim 166 as previously pending recites a polypeptide including a truncated sequence. Due to the open claim language, the claimed glycoprotein reads on a polypeptide comprising the truncated sequence as well as any other sequence, which includes a sequence identical to the truncated portion.

Applicants argue that the previously pending claims were required to be soluble, and thus do not read on full-length SEQ ID NO: 1 because full-length SEQ ID NO: 1 is a GPI anchored protein which is not soluble. This is also not persuasive since the examiner specifically addressed the limitation regarding solubility in the non-final Office action mailed August 20, 2008 at p. 12, lines 20-23; and p. 13, lines 6-10 with reference to DeFrees et al. Furthermore, the protein taught by Primakoff et al. is identical to that of full-length SEQ ID NO: 1, and Primakoff et al. indicate that soluble formulations were made by isolating the protein from membranes to make a

vaccine. Stern et al. disclose a protein that differs from full length SEQ ID NO: 1 by one amino acid which is solubilized by the use of liposomes.

Applicants argue that the examiner did not rely on DeFrees et al., Primakoff et al., and Stern et al. to address the solubility limitation in the way the Director relied upon the references in the decision on petition. Furthermore, applicants argue that DeFrees et al. fail to disclose GPI anchored proteins. This has been fully considered but is not found to be persuasive. The examiner discussed that Primakoff et al. disclosed a protein identical to full-length SEQ ID NO: 1 and further disclosed vaccine formulations at col. 3, lines 30-35 (see non-final Office action mailed August 20, 2008 at p. 12, lines 10-11). Col. 3, lines 30-35 of Primakoff et al. refer to contraceptive vaccines containing the recombinantly produced protein. Col. 4, lines 20-44 expand on the vaccine formulations by explaining how to recombinantly produce the protein and purify it for use in the vaccine. Similarly, in the non-final Office action mailed August 20, 2008, the examiner discussed that Stern et al. disclosed therapeutic agents comprising their protein, which differs from full-length SEQ ID NO: 1 by a single amino acid. The examiner referred to col. 2, lines 12-46 of Stern et al., which refers to injectable formulations of the protein. Col. 27, lines 7-24 expand upon injectable formulations made with liposomes to enhance solubility. Finally, the examiner discussed DeFrees et al. as teaching how to enhance solubility of glycoproteins in general by maintaining naturally occurring glycosylation patterns. The examiner thus applied a combination of references in the non-final Office action mailed August 20, 2008, that clearly addressed the limitation in the claims requiring the protein to be soluble.

Applicants argue that col. 4, lines 20-44 refer to a solubilized cell extract and not a solubilized protein. Applicants urge that there is no teaching or suggestion in Primakoff et al. that the resulting purified polypeptide once extracted from the membrane is soluble. Similarly, applicants argue that Stern et al. require a liposome for solubility. Applicants argue that the claims require a substantially purified polypeptide which does not read on a polypeptide in a liposome. Applicants urge that "soluble" should be read in light of the specification, referring specifically to [0065] which indicates proteins partitioning into an aqueous phase are exemplary of soluble proteins. This has been fully considered but is not found to be persuasive. "Substantially purified" is a relative term. In the absence of a limiting definition in the specification, it reads on a protein in a liposome or a membrane extract, since the protein is still substantially purified from other cellular components with which it is normally associated in a whole cell. The discussion of soluble protein at [0063] is exemplary and not limiting. Therefore, the previous claims read on full-length polypeptides since solubility-enhancement procedures were suggested by the combined teachings of the prior art references applied against the claims in the non-final Office action mailed August 20, 2008.

DECISION

The petition is subsequently **DENIED**.

The shortened statutory time period for response to the final Office action continues to run three months from the mailing date thereof (April 14, 2009). Extensions of time may be available under the provisions of 37 C.F.R. § 1.136(a).

Any new or renewed petition must be fled within TWO MONTHS of the mail date of this decision.

Should there be any questions about this decision please contact Quality Assurance Specialist Marianne C. Seidel, by letter addressed to Director, TC 1600, at the address listed above, or by telephone at 571-272-0584 or by facsimile sent to the general Office facsimile number, 703-872-9306.

Remy Yucel
Director, Technology Center 1600

UNITED STATES PATENT AND TRADEMARK OFFICE

Commissioner for Patents
United States Patent and Trademark Office
P.O. Box 1450
Alexandria, VA 22313-1450
www.uspto.gov

K&L Gates LLP
3580 Carmel Mountain Road
Suite 200
San Diego CA 92130

MAILED

JUN 01 2010

OFFICE OF PETITIONS

In re Application of :
Bookbinder et al. :
Application No. 10/795,095 :
Filed: March 5, 2004 :
Attorney Docket No. :
3800020.00002/3051 :
For: SOLUBLE HYALURONIDASE :
GLYCOPROTEIN (SHASEGP), PROCESS :
FOR PREPARING THE SAME, USES :
AND PHARMACEUTICAL COMPOSITIONS :
COMPRISING THEREOF :

ON APPLICATION FOR
PATENT TERM ADJUSTMENT

This is in response to the petition filed January 25, 2010, which is being treated under 37 CFR 1.705(b).

The request for review of the patent term adjustment is **GRANTED**.

The Office has updated the PAIR screen to reflect that the correct Patent Term Adjustment (PTA) determination at the time of the mailing of the Notice of Allowance is four hundred forty-three **(443)** days. A copy of the updated PAIR screen, showing the correct determination, is enclosed.

On January 5, 2010, the Office mailed the Determination of Patent Term Adjustment under 35 U.S.C. 154(b) in the above-identified application. The Notice stated that the patent term adjustment to date is five hundred thirty-five (535) days.

A review of the application history reveals that applicants should have been assessed a delay of ninety-two (92) days.

37 CFR §1.704(b) provides:

> an applicant shall be deemed to have failed to engage in reasonable efforts to conclude processing or examination of an application for the cumulative total of any periods of

> time in excess of three months that are taken to reply to any notice or action by the Office making any rejection, objection, argument, or other request, measuring such three-month period from the date the notice or action was mailed or given to the applicant, in which case the period of adjustment set forth in §1.703 shall be reduced by the number of days, if any, beginning on the day after the date that is three months after the date of mailing or transmission of the Office communication notifying the applicant of the rejection, objection, argument, or other request and ending on the date the reply was filed.

In this instance, a reduction of 92 days for the submission of reply on October 14, 2009 is warranted. The proper reply, a requested for continued examination (RCE) and submission pursuant to 37 CFR 1.114 was not received in the Office until October 14, 2009. The reduction is based upon, the number of days in excess of three months that was taken to reply to the April 14, 2009 Office action.

Further review of the record confirms that the supplemental replies submitted on November 10, 2009 and November 12, 2009 were requested by the examiner, thus a reduction is not required.

Applicants delay totals 349 (34 + 91 + 40 + 92 + 92) days. Office delay totals 792 days.

In view thereof, the correct determination of PTA at the time of the mailing of the notice of allowance is four hundred forty-three **(443)** days.

The $200.00 petition fee set forth in 37 CFR 1.18(e) has been assessed from deposit account no. 02-1818. No additional fees are required.

The application is being forwarded to the Office of Data Management for issuance of a patent. The patent term adjustment indicated on the patent (as shown on the Issue Notification mailed about three weeks prior to patent issuance) will include any additional adjustment accrued both for Office delay in issuing the patent more than four months after payment of the issue fee and satisfaction of all outstanding requirements, and for the Office taking in excess of three years to issue the

patent (to the extent that the three-year period does not overlap with periods already accorded).

Any request for reconsideration of the patent term adjustment indicated on the patent must be timely filed within 2 months after issuance pursuant to 37 CFR 1.705(d) and must include payment of the required fee under 37 CFR 1.18(e).

Telephone inquiries specific to this matter should be directed to the Petitions Attorney Charlema Grant at (571) 272-3215.

Anthony Knight
Director
Office of Petitions

Enclosure: Copy of REVISED PALM Screen

Day : Monday
Date: 5/31/2010

PALM INTRANET

Time: 09:09:26

PTA Calculations for Application: 10/795095			
Application Filing Date:	03/05/2004	PTO Delay (PTO):	792
Issue Date of Patent:		Three Years:	0
Pre-Issue Petitions:	0	Applicant Delay (APPL):	257
Post-Issue Petitions:	0	Total PTA (days):	443
PTO Delay Adjustment:	-92		

File Contents History

Number	Date	Contents Description	PTO	APPL	START
140	05/31/2010	ADJUSTMENT OF PTA CALCULATION BY PTO		92	
112	01/05/2010	MAIL NOTICE OF ALLOWANCE			
111	12/15/2009	ISSUE REVISION COMPLETED			
110	12/15/2009	DOCUMENT VERIFICATION			
109	12/15/2009	NOTICE OF ALLOWANCE DATA VERIFICATION COMPLETED			
108	12/15/2009	CASE DOCKETED TO EXAMINER IN GAU			
107	12/14/2009	NOTICE OF ALLOWABILITY			
101	11/17/2009	DATE FORWARDED TO EXAMINER			
100	11/12/2009	SUPPLEMENTAL RESPONSE			
99	11/17/2009	DATE FORWARDED TO EXAMINER			
98	11/10/2009	SUPPLEMENTAL RESPONSE			
97	11/03/2009	MAIL EXAMINER INTERVIEW SUMMARY (PTOL - 413)			
96	10/29/2009	EXAMINER INTERVIEW SUMMARY RECORD (PTOL - 413)			
95	10/14/2009	INFORMATION DISCLOSURE STATEMENT CONSIDERED			
94	10/14/2009	REFERENCE CAPTURE ON IDS			
93	10/14/2009	INFORMATION DISCLOSURE STATEMENT (IDS) FILED			
92	10/23/2009	DATE FORWARDED TO EXAMINER			
91	10/14/2009	AMENDMENT SUBMITTED/ENTERED WITH FILING OF CPA/RCE			
90	10/23/2009	DATE FORWARDED TO EXAMINER			
89	10/14/2009	REQUEST FOR CONTINUED EXAMINATION (RCE)			
88	10/23/2009	DISPOSAL FOR A RCE / CPA / R129			

87	10/14/2009	REQUEST FOR EXTENSION OF TIME - GRANTED			
86	10/14/2009	INFORMATION DISCLOSURE STATEMENT (IDS) FILED			
85	10/14/2009	WORKFLOW - REQUEST FOR RCE - BEGIN			
84	02/20/2009	REFERENCE CAPTURE ON IDS			
83	02/20/2009	INFORMATION DISCLOSURE STATEMENT (IDS) FILED		0	73
82	07/17/2009	MAIL-PETITION DECISION - DENIED			
81	07/17/2009	PETITION DECISION - DENIED			
80	06/29/2009	PETITION ENTERED			
79	06/02/2009	MAIL-PETITION DECISION - DENIED			
78	06/02/2009	PETITION DECISION - DENIED			
77	05/11/2009	PETITION ENTERED			
76	04/14/2009	MAIL FINAL REJECTION (PTOL - 326)			
75	04/13/2009	FINAL REJECTION			
74	03/25/2009	DATE FORWARDED TO EXAMINER			
73	02/20/2009	RESPONSE AFTER NON-FINAL ACTION		92	67
72	02/20/2009	REQUEST FOR EXTENSION OF TIME - GRANTED			
71	02/20/2009	INFORMATION DISCLOSURE STATEMENT CONSIDERED			
70	02/20/2009	INFORMATION DISCLOSURE STATEMENT (IDS) FILED			
69	11/26/2008	MAIL MISCELLANEOUS COMMUNICATION TO APPLICANT			
68	11/25/2008	MISCELLANEOUS COMMUNICATION TO APPLICANT - NO ACTION COUNT			
67	08/20/2008	MAIL NON-FINAL REJECTION			
66	08/18/2008	NON-FINAL REJECTION			
65	04/02/2008	INFORMATION DISCLOSURE STATEMENT CONSIDERED			
64	05/12/2008	INFORMATION DISCLOSURE STATEMENT CONSIDERED			
63	07/30/2008	DATE FORWARDED TO EXAMINER			
62	07/07/2008	RESPONSE TO ELECTION / RESTRICTION FILED			
61	06/06/2008	MAIL RESTRICTION REQUIREMENT			
60	06/05/2008	REQUIREMENT FOR RESTRICTION / ELECTION			
59	05/12/2008	INFORMATION DISCLOSURE STATEMENT (IDS) FILED		40	57

58	06/01/2008	DATE FORWARDED TO EXAMINER			
57	04/02/2008	RESPONSE TO ELECTION / RESTRICTION FILED		91	48
56	04/02/2008	REQUEST FOR EXTENSION OF TIME - GRANTED			
55	05/12/2008	INFORMATION DISCLOSURE STATEMENT (IDS) FILED			
54	05/08/2008	CHANGE IN POWER OF ATTORNEY (MAY INCLUDE ASSOCIATE POA)			
53	05/08/2008	CORRESPONDENCE ADDRESS CHANGE			
52	04/02/2008	REFERENCE CAPTURE ON IDS			
51	04/02/2008	INFORMATION DISCLOSURE STATEMENT (IDS) FILED			
50	04/02/2008	MISCELLANEOUS INCOMING LETTER			
49	04/02/2008	INFORMATION DISCLOSURE STATEMENT (IDS) FILED			
48	10/02/2007	MAIL RESTRICTION REQUIREMENT			
47	10/01/2007	REQUIREMENT FOR RESTRICTION / ELECTION			
46	09/20/2007	CASE DOCKETED TO EXAMINER IN GAU			
45	08/16/2007	DATE FORWARDED TO EXAMINER			
44	08/08/2007	RESPONSE TO ELECTION / RESTRICTION FILED			
43	07/06/2007	MAIL RESTRICTION REQUIREMENT	792		-1
42	06/25/2007	REQUIREMENT FOR RESTRICTION / ELECTION			
41	03/14/2007	INFORMATION DISCLOSURE STATEMENT CONSIDERED			
40.7	03/14/2007	INFORMATION DISCLOSURE STATEMENT (IDS) FILED			
40	03/14/2007	INFORMATION DISCLOSURE STATEMENT (IDS) FILED			
39	11/20/2006	INFORMATION DISCLOSURE STATEMENT CONSIDERED			
38	12/08/2006	INFORMATION DISCLOSURE STATEMENT CONSIDERED			
37	12/08/2006	REFERENCE CAPTURE ON IDS			
36.7	12/08/2006	INFORMATION DISCLOSURE STATEMENT (IDS) FILED			
36	12/08/2006	INFORMATION DISCLOSURE STATEMENT (IDS) FILED			
35.7	11/20/2006	INFORMATION DISCLOSURE STATEMENT (IDS) FILED			
35	11/20/2006	INFORMATION DISCLOSURE STATEMENT (IDS) FILED			

34	11/09/2005	INFORMATION DISCLOSURE STATEMENT CONSIDERED			
33	11/09/2005	REFERENCE CAPTURE ON IDS			
32.7	11/09/2005	INFORMATION DISCLOSURE STATEMENT (IDS) FILED			
32	11/09/2005	INFORMATION DISCLOSURE STATEMENT (IDS) FILED			
31	01/03/2005	IFW TSS PROCESSING BY TECH CENTER COMPLETE			
30	01/03/2005	CHANGE IN POWER OF ATTORNEY (MAY INCLUDE ASSOCIATE POA)			
29	01/03/2005	CORRESPONDENCE ADDRESS CHANGE			
28	01/03/2005	CASE DOCKETED TO EXAMINER IN GAU			
27	09/17/2004	APPLICATION RETURN FROM OIPE			
26	09/17/2004	APPLICATION RETURN TO OIPE			
25	09/17/2004	APPLICATION RETURN FROM OIPE			
24	09/20/2004	APPLICATION IS NOW COMPLETE			
23	08/27/2004	PAYMENT OF ADDITIONAL FILING FEE/PREEXAM			
22	08/30/2004	A STATEMENT BY ONE OR MORE INVENTORS SATISFYING THE REQUIREMENT UNDER 35 USC 115, OATH OF THE APPLIC		34	10
21	03/05/2004	A STATEMENT BY ONE OR MORE INVENTORS SATISFYING THE REQUIREMENT UNDER 35 USC 115, OATH OF THE APPLIC			
20	09/17/2004	PRE-EXAM OFFICE ACTION WITHDRAWN			
19	09/17/2004	APPLICATION RETURN TO OIPE			
18	09/17/2004	APPLICATION DISPATCHED FROM OIPE			
17	09/17/2004	APPLICATION IS NOW COMPLETE			
10	04/27/2004	NOTICE MAILED--APPLICATION INCOMPLETE--FILING DATE ASSIGNED			
7	04/21/2004	CLEARED BY L&R (LARS)			
6	04/05/2004	REFERRED TO LEVEL 2 (LARS) BY OIPE CSR			
5	04/05/2004	CASE CLASSIFIED BY OIPE			
4	03/26/2004	IFW SCAN & PACR AUTO SECURITY REVIEW			
3	03/19/2004	CRF IS GOOD TECHNICALLY / ENTERED INTO DATABASE			
2	03/05/2004	CRF DISK HAS BEEN RECEIVED BY PREEXAM / GROUP / PCT			
1	03/05/2004	INITIAL EXAM TEAM NN			

Search Another: Application# [ ] Search

EXPLANATION OF PTA CALCULATION

EXPLANATION OF PTE CALCULATION

To go back, right click here and select Back. To go forward, right click here and select Forward. To refresh, right click here and select Refresh.

Back to OASIS | Home page

UNITED STATES PATENT AND TRADEMARK OFFICE

Commissioner for Patents
United States Patent and Trademark Office
P.O. Box 1450
Alexandria, VA 22313-1450
www.uspto.gov
DIW Apr-07

NATIONAL AERONAUTICS AND SPACE ADMINISTRATION
LANGLEY RESEARCH CENTER
MAIL STOP 141
HAMPTON VA 23681-2199

COPY MAILED

APR 23 2007

OFFICE OF PETITIONS

In re Application of	:	
Jordan et al.	:	DECISION ON PETITION TO
Application No. 10/795,097	:	WITHDRAW HOLDING OF
Filed: 03/04/2004	:	ABANDONMENT
Attorney Docket No. LAR 16606-1	:	

This is a decision on the petition filed on 5 January, 2007,[1] which is treated as a petition to withdraw the holding of abandonment in the above-identified application.

The petition is **GRANTED**.

A review of the record reveals that a Notice to File Missing Parts was mailed on 25 May, 2004, requiring an executed oath or declaration and a surcharge for its late filing, and setting two (2) month shortened period for reply. No response have been received, the application was held abandoned, and a Notice of Abandonment was mailed on 15 February, 2005.

Petitioners assert that a timely response to the Notice was filed by Express Mail. In support, petitioner has provided a copy of the reply, including a transmittal letter itemizing the filing of the response to the Notice mailed on 25 May, 2004, and containing Express Mail label No. ED021884134US. A copy of Express Mail Label No. ED012884134US has also been provided.

37 CFR 1.10(e) provides:

[1] Although the petition does not contain a certificate of mailing or transmission, or a copy of the sending unit's transmission report, the facsimile cover sheet indicates that the petition was originally sent by facsimile on 23 February, 2005, but was sent to "703-308-7751". As such, it appears that petitioners intended to timely file the petition, but did not send it to the current Office facsimile number.

Any person mailing correspondence properly addressed to the Office with sufficient postage utilizing "Express Mail Post Office to Addressee" service of the USPS but not received by the Office, may petition the Commissioner to consider such correspondence filed in the Office on the USPS deposit date, provided that:

(1) The petition is filed promptly after the person becomes aware that the Office has no evidence of receipt of the correspondence;

(2) The number of the "Express Mail" mailing label was placed on the paper(s) or fee(s) that constitute the correspondence prior to the original mailing by "Express Mail";

(3) The petition includes a copy of the originally deposited paper(s) or fee(s) that constitute the correspondence showing the number of the "Express Mail" mailing label thereon, a copy of any returned postcard receipt, a copy of the "Express Mail" mailing label showing the "date-in," a copy of any other official notation by the USPS relied upon to show the date of deposit, and, if the requested filing date is a date other than the "date-in" on the "Express Mail" mailing label or other official notation entered by the USPS, a showing pursuant to paragraph (d)(3) of this section that the requested filing date was the date the correspondence was deposited in the "Express Mail Post Office to Addressee" service prior to the last scheduled pickup for that day; and

(4) The petition includes a statement which establishes, to the satisfaction of the Commissioner, the original deposit of the correspondence and that the copies of the correspondence, the copy of the "Express Mail" mailing label, the copy of any returned postcard receipt, and any official notation entered by the USPS are true copies of the originally mailed correspondence, original "Express Mail" mailing label, returned postcard receipt, and official notation entered by the USPS.

Petitioner alleges that the reply to the Notice mailed on 25 May, 2004, was deposited in "Express Mail" service with the U.S. Postal Service on 28 June, 2004. In support, petitioner provided a copy of the Express Mail label, receipt No. ED021884134US. Although the "date-in" is not legible on the Express Mail label, the Express Mail label also contains an Official USPS postmark dated 28 June, 2004. The same Express Mail receipt number was referred to on the itemized transmittal sheet filed with the response to the Notice mailed on 25 May, 2004.

The Office considers the date the paper or fee is shown to have been deposited as "Express Mail" to be the "Date In", or other

evidence from the USPS on the Express Mail label.[2] That is the date that verifies that the package was actually mailed. In view of the above, the evidence is convincing that the application was deposited as "Express Mail" with the USPS on 28 June, 2004.

As the petition is signed by registered patent attorney Helen M. Galus, the same individual who signed the response filed by Express Mail, the petition will be construed as containing the statement required by 37 CFR 1.10(e)(4). Petitioners **must** inform the Office if this is an incorrect interpretation.

As petitioners have provided convincing evidence that a response to the Notice mailed on 25 May, 2004, was filed on 28 June, 2004, the showing of record is that a response was timely filed, and there is no abandonment in fact. Any inconvenience caused to applicant is regretted.

The application is being referred to the Office of Initial Patent Examination for further processing.

Telephone inquiries concerning this matter may be directed to the undersigned at (571)272-3231.

D Wood

Douglas I. Wood
Senior Petitions Attorney
Office of Petitions

[2] MPEP 513.

UNITED STATES PATENT AND TRADEMARK OFFICE

Commissioner for Patents
United States Patent and Trademark Office
P.O. Box 1450
Alexandria, VA 22313-1450
www.uspto.gov

HOWARD J. GREENWALD P.C.
349 W. COMMERCIAL STREET SUITE 2490
EAST ROCHESTER NY 14445-2408

COPY MAILED

SEP 2 0 2005

OFFICE OF PETITIONS

In re Application of	:	
Anstadt, et al.	:	DECISION
Application No. 10/795,098	:	ON PETITION
Filed: March 5, 2004	:	
Attorney Docket No. MPA-643	:	

This is a decision on the petition under 37 CFR 1.137(f), filed May 16, 2005, to revive the above-identified application.

The petition is **DISMISSED**.

Any request for reconsideration of this decision must be submitted within TWO (2) MONTHS from the mail date of this decision. Extensions of time under 37 CFR 1.136(a) are permitted. Petitioners are advised that this is not a final agency decision.

Petitioner states that the instant nonprovisional application is the subject of a PCT application filed on February 22, 2005. However, the U.S. Patent and Trademark Office was unintentionally not notified of this filing within 45 days subsequent to the filing of the PCT application.

In view of the above, this petitioner states that this application was abandoned pursuant to 35 U.S.C. § 122(b)(2)(B)(iii) and 37 CFR 1.213(c) for failure to timely notify the Office of the filing of an application under a multilateral international agreement that requires publication of applications 18 months after filing.

However, the petition under 37 CFR 1.137(f) cannot be granted at this time because the application became abandoned for failure to timely reply to the September 23, 2004 Notice to File Missing Parts of Nonprovisional Application, which required applicants to submit an executed oath/declaration and surcharge for its late filing within an extendable two month period from the September 23, 2004 mail date of the Notice.

Applicants did not purchase an extension of time or respond timely. Thus, this application became abandoned on November 24, 2004. It would be inappropriate to grant a petition under 37 CFR 1.137(f) when the application would remain abandoned.

Petitioners must file (1) a petition to revive under 37 CFR 1.137(a) or (b) with a reply to the

September 23, 2004 Notice **OR** file a petition to withdraw the holding of abandonment under 37 CFR 1.181 if petitioners allege they did not receive the September 23, 2004 Notice **AND** (2) a reconsideration petition under 37 CFR 1.137(f).

Further correspondence with respect to this matter should be addressed as follows:

By mail: Mail Stop PETITION
Commissioner for Patents
Post Office Box 1450
Alexandria, VA 22313-1450

By hand: U.S. Patent and Trademark Office
Customer Service Window, Mail Stop Petition
Randolph Building
401 Dulany Street
Alexandria, VA 22314

By FAX: (571) 273-8300 - ATTN: Office of Petitions

Any inquiries concerning this decision may be directed to the undersigned at (571) 272-3230.

E. Shirene Willis

E. Shirene Willis
Senior Petitions Attorney
Office of Petitions
Office of the Deputy Commissioner
for Patent Examination Policy

UNITED STATES PATENT AND TRADEMARK OFFICE

Commissioner for Patents
United States Patent and Trademark Office
P.O. Box 1450
Alexandria, VA 22313-1450
www.uspto.gov

HOWARD J. GREENWALD P.C.
349 W. COMMERCIAL STREET SUITE 2490
EAST ROCHESTER NY 14445-2408

COPY MAILED
APR 0 3 2006
OFFICE OF PETITIONS

In re Application of	:	
Anstadt, et al.	:	DECISION
Application No. 10/795,098	:	ON PETITION
Filed: March 5, 2004	:	
Attorney Docket No. MPA-643	:	

This is a decision on the petition under 37 CFR 1.181 to withdraw the holding of abandonment of the above-identified application and the reconsideration petition under 37 CFR 1.137(f). Both petitions were filed on September 23, 2005.

The petition under 37 CFR 1.181 is **GRANTED**.

The petition under 37 CFR 1.137(f) is **GRANTED**.

The Office contended that the application became abandoned on November 24, 2004 for failure to timely reply to the September 23, 2004 Notice to File Missing Parts of Nonprovisional Application, which required applicants to submit an executed oath/declaration and surcharge for its late filing within an extendable two month period from mail date of the Notice. A Notice of Abandonment has not been mailed in this case.

Petitioners assert that a timely response was filed in the Office on November 22, 2004 by facsimile transmission. A review of the copy of the reply reveals that applicants listed an incorrect application number in the headers. Applicant typed: "Application Number: 10/795,078." (Emphasis added).

Even though petitioners cited the wrong application number, under MPEP 502, " A minor error in the identification of the application can be corrected by the group, provided the correct identification can be quickly discovered. Examples of minor errors are transposed numbers, typographical errors, and listing the parent application number." The undersigned believes that a relatively simple review of Office records would have yielded the correct application number to enable the Office to match the November 22, 2004 correspondence with this application file. A cross-referencing of any of the accurate identifiers found on the reply with Office database records would have revealed the typographical error.

Therefore, the response to the September 23, 2004 Notice was timely filed. Accordingly, the petition is **GRANTED**, the Notice of Abandonment is hereby vacated, and the holding of abandonment withdrawn.

No petition fee has been or will be charged in connection with this matter.

Petitioners state that the instant nonprovisional application is the subject of a PCT application filed on February 22, 2005. However, the U.S. Patent and Trademark Office was unintentionally not notified of this filing within 45 days subsequent to the filing of the PCT application.

In view of the above, this application became abandoned pursuant to 35 U.S.C. § 122(b)(2)(B)(iii) and 37 CFR 1.213(c) for failure to timely notify the Office of the filing of an application under a multilateral international agreement that requires publication of applications 18 months after filing.

A petition under 37 CFR 1.137(f) must be accompanied by:

> (1) the reply which is met by the notification of such filing in a foreign country or under a multinational treaty;
>
> (2) the petition fee as set forth in 37 CFR 1.17(m); and
>
> (3) a statement that the entire delay in filing the required reply from the due date of the reply until the filing of a grantable petition was unintentional.

The instant petition has been found to be in compliance with 37 CFR 1.137(f). Accordingly, the failure to timely notify the Office of the filing of the PCT application within 45 days after the date of filing of such international application as provided by 35 U.S.C. § 122(b)(2)(B)(iii) and 37 CFR 1.213(c) is accepted as having been unintentionally delayed. The petition under 37 CFR 1.137(f) is **GRANTED**.

The previous Request and Certification under 35 U.S.C. § 122(b)(2)(B)(I) has been rescinded. A Notice Regarding Rescission of Nonpublication Request which sets forth the projected publication date will be mailed by the Office of Initial Patent Examination in due course.

The revocation and power of attorney correspondence filed on December 5, 2005 is not acceptable because Jeffrey L. Helfer's title is not listed on the document. Mr. Helfer should execute a new revocation and power of attorney that lists his title. A courtesy copy of this decision will be mailed the customer number 21839.

Regarding fees, petitioners were charged two petition fees. One $750.00 petition fee will be credited to deposit account no. 50-2753.

Any inquiries concerning this decision may be directed to the undersigned at (571) 272-3230.

This application is being forwarded to the Office of Initial Patent Examination for examination in due course.

E. Shirene Willis

E. Shirene Willis
Senior Petitions Attorney
Office of Petitions
Office of the Deputy Commissioner
for Patent Examination Policy

cc: BUCHANAN INGERSOLL PC
(INCLUDING BURNS, DOANE, SWECKER & MATHIS)
POST OFFICE BOX 1404
ALEXANDRIA, VA 22313-1404

UNITED STATES PATENT AND TRADEMARK OFFICE

Commissioner for Patents
United States Patent and Trademark Office
P.O. Box 1450
Alexandria, VA 22313-1450
www.uspto.gov

HOWARD J. GREENWALD
HOWARD J. GREENWALD P.C.
70 LINDEN OAKS, THIRD FLOOR
ROCHESTER, NY 14625

MAILED

MAY 29 2009

OFFICE OF PETITIONS

In re Application of	:	
Anstadt et al.	:	DECISION ON PETITION
Application No. 10/795,098	:	TO WITHDRAW
Filed: March 5, 2004	:	FROM RECORD
Attorney Docket No. 1034448-000009	:	

This is a decision on the Request to Withdraw as attorney or agent of record under 37 C.F.R. § 1.36(b), filed October 6, 2005.

The request is **NOT APPROVED** because it is moot.

A review of the file record indicates that on May 5, 2006 the power of attorney was revoked by the assignee of the patent application. Accordingly, the request to withdraw under 37 C.F.R. § 1.36(b) is moot.

All future communications from the Office will be directed to the below-listed address until otherwise notified by applicant.

Telephone inquires concerning this decision should be directed to the undersigned at 571-272-7751. All other inquires concerning either the examination or status of the application should be directed to the Technology Center.

Joan Olszewski

Joan Olszewski
Petitions Examiner
Office of Petitions

cc: Buchanan, Ingersoll & Rooney PC
Post Office Box 1404
Alexandria VA 22313-1404

UNITED STATES PATENT AND TRADEMARK OFFICE

Commissioner for Patents
United States Patent and Trademark Office
P.O. Box 1450
Alexandria, VA 22313-1450
www.uspto.gov

ALSTON & BIRD LLP
BANK OF AMERICA PLAZA
101 SOUTH TRYON STREET, SUITE 4000
CHARLOTTE, NC 28280-4000

MAILED

FEB 25 2009

OFFICE OF PETITIONS

In re Application of Burdette et al.	:	
Application No. 10/795,102	:	Decision on Petition
Filing Date: March 5, 2004	:	
Attorney Docket No. 045600/275113	:	

This is a decision on the petition under 37 CFR 1.182, filed August 29, 2008, to change the name of an inventor.

The petition is **granted**.

The Office has changed Jill Burdette's name to Jill Hinson.

Technology Center Art Unit 1623 will address the request under 37 CFR 1.48 also filed on August 29, 2008.

Telephone inquiries regarding this communication should be directed to Petitions Attorney Steven Brantley at (571) 272-3203.

Charles Steven Brantley
Senior Petitions Attorney
Office of Petitions

Attached: Corrected Filing Receipt

UNITED STATES PATENT AND TRADEMARK OFFICE

UNITED STATES DEPARTMENT OF COMMERCE
United States Patent and Trademark Office
Address: COMMISSIONER FOR PATENTS
P.O. Box 1450
Alexandria, Virginia 22313-1450
www.uspto.gov

APPLICATION NUMBER	FILING or 371(c) DATE	GRP ART UNIT	FIL FEE REC'D	ATTY.DOCKET.NO	TOT CLAIMS	IND CLAIMS
10/795,102	03/05/2004	1623	1185	045600/275113	31	5

CONFIRMATION NO. 9306

CORRECTED FILING RECEIPT

826
ALSTON & BIRD LLP
BANK OF AMERICA PLAZA
101 SOUTH TRYON STREET, SUITE 4000
CHARLOTTE, NC 28280-4000

OC000000034708764

Date Mailed: 02/24/2009

Receipt is acknowledged of this non-provisional patent application. The application will be taken up for examination in due course. Applicant will be notified as to the results of the examination. Any correspondence concerning the application must include the following identification information: the U.S. APPLICATION NUMBER, FILING DATE, NAME OF APPLICANT, and TITLE OF INVENTION. Fees transmitted by check or draft are subject to collection. Please verify the accuracy of the data presented on this receipt. **If an error is noted on this Filing Receipt, please submit a written request for a Filing Receipt Correction. Please provide a copy of this Filing Receipt with the changes noted thereon. If you received a "Notice to File Missing Parts" for this application, please submit any corrections to this Filing Receipt with your reply to the Notice. When the USPTO processes the reply to the Notice, the USPTO will generate another Filing Receipt incorporating the requested corrections**

Applicant(s)

Jill Hinson, Morrisville, NC;
Brian Vande Berg, Durham, NC;
Brian Carr, Raleigh, NC;
Nicholas B. Duck, Apex, NC;
Michael G. Koziel, Raleigh, NC;
Nadine Carozzi, Raleigh, NC;
Paresma R. Patel, Durham, NC;

Assignment For Published Patent Application

Athenix Corporation, Durham, NC

Power of Attorney: The patent practitioners associated with Customer Number 00826

Domestic Priority data as claimed by applicant

This appln claims benefit of 60/452,631 03/07/2003
and claims benefit of 60/498,098 08/27/2003
and claims benefit of 60/502,727 09/12/2003
and claims benefit of 60/538,334 01/22/2004

Foreign Applications

If Required, Foreign Filing License Granted: 05/24/2004

The country code and number of your priority application, to be used for filing abroad under the Paris Convention, is **US 10/795,102**

Projected Publication Date: Not Applicable

Non-Publication Request: No

Early Publication Request: No
**** SMALL ENTITY ****
Title

Methods to enhance the activity of lignocellulose-degrading enzymes

Preliminary Class

536

PROTECTING YOUR INVENTION OUTSIDE THE UNITED STATES

Since the rights granted by a U.S. patent extend only throughout the territory of the United States and have no effect in a foreign country, an inventor who wishes patent protection in another country must apply for a patent in a specific country or in regional patent offices. Applicants may wish to consider the filing of an international application under the Patent Cooperation Treaty (PCT). An international (PCT) application generally has the same effect as a regular national patent application in each PCT-member country. The PCT process **simplifies** the filing of patent applications on the same invention in member countries, but **does not result** in a grant of "an international patent" and does not eliminate the need of applicants to file additional documents and fees in countries where patent protection is desired.

Almost every country has its own patent law, and a person desiring a patent in a particular country must make an application for patent in that country in accordance with its particular laws. Since the laws of many countries differ in various respects from the patent law of the United States, applicants are advised to seek guidance from specific foreign countries to ensure that patent rights are not lost prematurely.

Applicants also are advised that in the case of inventions made in the United States, the Director of the USPTO must issue a license before applicants can apply for a patent in a foreign country. The filing of a U.S. patent application serves as a request for a foreign filing license. The application's filing receipt contains further information and guidance as to the status of applicant's license for foreign filing.

Applicants may wish to consult the USPTO booklet, "General Information Concerning Patents" (specifically, the section entitled "Treaties and Foreign Patents") for more information on timeframes and deadlines for filing foreign patent applications. The guide is available either by contacting the USPTO Contact Center at 800-786-9199, or it can be viewed on the USPTO website at http://www.uspto.gov/web/offices/pac/doc/general/index.html.

For information on preventing theft of your intellectual property (patents, trademarks and copyrights), you may wish to consult the U.S. Government website, http://www.stopfakes.gov. Part of a Department of Commerce initiative, this website includes self-help "toolkits" giving innovators guidance on how to protect intellectual property in specific countries such as China, Korea and Mexico. For questions regarding patent enforcement issues, applicants may call the U.S. Government hotline at 1-866-999-HALT (1-866-999-4158).

LICENSE FOR FOREIGN FILING UNDER

Title 35, United States Code, Section 184

Title 37, Code of Federal Regulations, 5.11 & 5.15

GRANTED

The applicant has been granted a license under 35 U.S.C. 184, if the phrase "IF REQUIRED, FOREIGN FILING LICENSE GRANTED" followed by a date appears on this form. Such licenses are issued in all applications where the conditions for issuance of a license have been met, regardless of whether or not a license may be required as set forth in 37 CFR 5.15. The scope and limitations of this license are set forth in 37 CFR 5.15(a) unless an earlier license has been issued under 37 CFR 5.15(b). The license is subject to revocation upon written notification. The date indicated is the effective date of the license, unless an earlier license of similar scope has been granted under 37 CFR 5.13 or 5.14.

This license is to be retained by the licensee and may be used at any time on or after the effective date thereof unless it is revoked. This license is automatically transferred to any related applications(s) filed under 37 CFR 1.53(d). This license is not retroactive.

The grant of a license does not in any way lessen the responsibility of a licensee for the security of the subject matter as imposed by any Government contract or the provisions of existing laws relating to espionage and the national security or the export of technical data. Licensees should apprise themselves of current regulations especially with respect to certain countries, of other agencies, particularly the Office of Defense Trade Controls, Department of State (with respect to Arms, Munitions and Implements of War (22 CFR 121-128)); the Bureau of Industry and Security, Department of Commerce (15 CFR parts 730-774); the Office of Foreign AssetsControl, Department of Treasury (31 CFR Parts 500+) and the Department of Energy.

NOT GRANTED

No license under 35 U.S.C. 184 has been granted at this time, if the phrase "IF REQUIRED, FOREIGN FILING LICENSE GRANTED" DOES NOT appear on this form. Applicant may still petition for a license under 37 CFR 5.12, if a license is desired before the expiration of 6 months from the filing date of the application. If 6 months has lapsed from the filing date of this application and the licensee has not received any indication of a secrecy order under 35 U.S.C. 181, the licensee may foreign file the application pursuant to 37 CFR 5.15(b).

UNITED STATES PATENT AND TRADEMARK OFFICE

Commissioner for Patents
United States Patent and Trademark Office
P.O. Box 1450
Alexandria, VA 22313-1450
www.uspto.gov

RUDEN, MCCLOSKY, SMITH, SCHUSTER & RUSSELL, P.A.
222 LAKEVIEW AVE
SUITE 800
WEST PALM BEACH FL 33401-6112

COPY MAILED

MAR 17 2009

OFFICE OF PETITIONS

In re Application of Mathur et al. Application No. 10/795125 Filing Date: 03/05/2004 Attorney Docket Number: 10940-1	: : : : : :	ON PETITION

This is a decision on the petition under the unintentional provisions of 37 CFR 1.137(b), filed February 10, 2009, to revive the above-identified application.

The petition is **GRANTED**.

The application became abandoned for failure to timely file a reply within the meaning of 37 CFR 1.113 to the final Office action of June 14, 2007. The proposed reply required for consideration of a petition to revive must be a Notice of Appeal (and appeal fee required by 37 CFR 41.20(b)(2), an amendment that *prima facie* places the application in condition for allowance, a Request for Continued Examination and submission (37 CFR 1.114), or the filing of a continuing application under 37 CFR 1.53(b). See MPEP 711.03(c)(III)(A)(2). Accordingly, the date of abandonment of this application is September 20, 2007.

The petition satisfies the requirements of 37 CFR 1.137(b) in that petitioner has supplied (1) the reply in the form of a Request for Continued Examination (RCE) and fee (and the submission required by 37 CFR 1.114); (2) the petition fee; and (3) a proper statement of unintentional delay.

The Power of Attorney/Change of Correspondence Address has been entered and made of record.

Telephone inquiries concerning this decision should be directed to the undersigned at (571) 272-3232.

The application is being referred to Technology Center AU 2165 for processing of the RCE, and for appropriate action on the Amendment by the Examiner in the normal course of business.

/Derek L. Woods/
Derek L. Woods
Attorney
Office of Petitions

UNITED STATES PATENT AND TRADEMARK OFFICE

COMMISSIONER FOR PATENTS
UNITED STATES PATENT AND TRADEMARK OFFICE
P.O. BOX 1450
ALEXANDRIA, VA 22313-1450
www.uspto.gov

PERKINS COIE LLP/MSFT
P. O. BOX 1247
SEATTLE WA 98111-1247

MAILED

MAY 15 2009

OFFICE OF PETITIONS

In re Application	:	
Weissman, et al.	:	
Application No. 10/795,185	:	PATENT TERM ADJUSTMENT
Filed: March 4, 2004	:	
Dkt. No.: 418268606US1	:	

This decision is in response to the "APPLICATION FOR PATENT TERM ADJUSTMENT RECONSIDERATION UNDER 37 C.F.R. § 1.705(B)," filed February 11, 2009.

The Determination of Patent Term Adjustment under 35 USC 154(b) was mailed January 12, 2009 and indicated a patent term adjustment to date of 966 days. The instant application was timely filed February 11, 2009 along with issue fee payment. Applicants contest the adjustment insofar as it relates to the Office's failure to issue the patent within three years of the filing date of the application pursuant to 37 CFR 1.703(b) in view of Wyeth v. Dudas, No. 07-1492 (D.D.C. September 30, 2008).

To the extent that this application for patent term adjustment requests reconsideration of the patent term adjustment as it relates to the Office's failure to issue the patent within 3 years of the filing date, a decision is being **held in abeyance** until after the actual patent date. Knowledge of the actual date the patent issues is ordinarily required to calculate the amount, if any, of additional patent term patentee is entitled to for Office failure to issue the patent within 3 years. See, 37 CFR 1.703(b). It is noted that at the time of this decision, the patent has not issued.

Applicants are given **TWO (2) MONTHS** from the issue date of the patent to file a written request for reconsideration of the patent term adjustment for Office failure to issue the patent within 3 years. A copy of this decision should accompany the request. Applicants may seek such consideration without payment of an additional fee. However, as to all other bases for seeking reconsideration of the patent term adjustment indicated in the

patent, all requirements of § 1.705(d) must be met. Requests for reconsideration on other bases must be timely filed and must include payment of the required fee.

With respect to the over 3 year calculation, rather than file the request for reconsideration of Patent Term Adjustment at the time of the mailing of the notice of allowance, applicants are advised that they may wait until the time of the issuance of the patent and file a request for reconsideration of the patent term pursuant to 37 CFR 1.705(d). The USPTO notes that it does not calculate the amount of time earned pursuant to 37 CFR 1.702(b) until the time of the issuance of the patent and accordingly, the Office will consider any request for reconsideration of the patent term adjustment due to an error in the calculation of 37 CFR 1.702(b) to be timely if the request for reconsideration is filed within two months of the issuance of the patent.

The Office acknowledges the receipt of the required $200.00 application fee set forth in 37 CFR 1.18(e).

The application file is being forwarded to the Office of Patent Publication for issuance of the patent. The patent term adjustment indicated on the patent (as shown on the Issue Notification mailed about three weeks prior to patent issuance) will include any additional adjustment accrued both for Office delay in issuing the patent more than four months after payment of the issue fee and satisfaction of all outstanding requirements, and for the Office taking in excess of three years to issue the patent (to the extent that the three-year period does not overlap with periods already accorded).

Telephone inquiries specific to this matter should be directed to the undersigned at (571) 272-3205.

/ALESIA M. BROWN/

Alesia M. Brown
Petitions Attorney
Office of Petitions

UNITED STATES PATENT AND TRADEMARK OFFICE

COMMISSIONER FOR PATENTS
UNITED STATES PATENT AND TRADEMARK OFFICE
P.O. BOX 1450
ALEXANDRIA, VA 22313-1450
www.uspto.gov

PFIZER INC.
PATENT DEPARTMENT, MS8260-1611
EASTERN POINT ROAD
GROTON, CT 06340

COPY MAILED

MAR 2 4 2005

OFFICE OF PETITIONS

In re Application of:	:	
Greengrass et al.	:	
Application No. 10/795,187	:	DECISION DISMISSING
Filed: March 4, 2004	:	PETITION UNDER
Title of Invention: ASSAY	:	37 CFR 1.47(a)

This decision is in response to the Petition for Filing by Other Than all the Inventors, filed January 25, 2005, to allow the other inventor(s) to proceed with the application on behalf of himself or herself and the nonsigning inventor(s). The petition is properly treated under 37 CFR 1.47(a),

The petition is **dismissed**.

Rule 47 applicant is given TWO (2) MONTHS from the mailing date of this decision to reply, correcting the below-noted deficiencies. Any reply should be entitled "Request for Reconsideration of Petition Under 37 CFR 1.47(a)", and should only address the deficiencies noted below, except that the reply may include an oath or declaration executed by the non-signing inventor. Failure to respond will result in abandonment of the application. Any extensions of time will be governed by 37 CFR 1.136(a).

The above-identified application was filed on March 4, 2004, without an oath or declaration. In response, this Office mailed a Notice to File Missing Parts of Nonprovisional Application (hereinafter "Notice") on July 19, 2004, requiring, *inter alia*, a fully executed signed oath or declaration and a late filing fee, oath or declaration and surcharge.

In response to the Notice, Applicant files the instant petition and declaration of inventors and lists inventors Greengrass, Stewart and Wood. The Declaration also includes the citizenship of the three inventors, but does not include the residence or

mailing addresses of the inventors. A review of the Application Data Sheet ("ADS") filed with the application on March 4, 2004 reveals that listed thereon are two inventors: Greengrass and Stewart.

As such, the residence and/or mailing address of inventor Wood has not been provided.

A grantable petition under 37 CFR 1.47(a) requires: (1) proof that the non-signing inventor cannot be reached or refuses to sign the oath or declaration after having been presented with the application papers (specification, claims and drawings); (2) an acceptable oath or declaration in compliance with 35 U.S.C. §§ 115 and 116; (3) the petition fee; (4) a statement of the last known address of the non-signing inventor(s). Applicant lacks item (2) as set forth above.

As to item (2), Applicant must provide the mailing address and/or residence of inventor Wood in accordance with 37 CFR 1.63.

It is also noted that the residences of inventors Greengrass and Stewart that appear on the ADS are the same, indicating that they may reside together. Further to this, the street numbers on Ramsgate Road, where both inventors apparently reside, have not been provided. If it is customary that street numbers do not comprise part of the mailing address of citizens in the United Kingdom, Applicant should state this in any Request for Reconsideration of Petition. Otherwise, please provide the street numbers of the inventors addresses.

Applicant is advised that the "mailing address" is the address where applicant customarily receives mail. *See* MPEP 601.05.

Further correspondence with respect to this matter should be addressed as follows:

By mail: Commissioner for Patents
PO Box 1450
Alexandria, VA 22313-1450

By facsimile: (703) 308-6916
Attn: Office of Petitions

By hand: Customer Service Window
Randolph Building
401 Dulany Street
Alexandria, VA 22314

Telephone inquiries concerning this matter should be directed to the undersigned at (571) 272-3232.

Derek L. Woods
Attorney/Advisor
Office of Petitions

UNITED STATES PATENT AND TRADEMARK OFFICE

COMMISSIONER FOR PATENTS
UNITED STATES PATENT AND TRADEMARK OFFICE
P.O. BOX 1450
ALEXANDRIA, VA 22313-1450
www.uspto.gov

PFIZER INC.
EASTERN POINT ROAD
MS 8260-1611
GROTON, CT 06340

COPY MAILED

JUN 1 0 2005

OFFICE OF PETITIONS

In re Application of:
Greengrass et al.
Application No. 10/795,187
Filed: March 4, 2004
Title of Invention: ASSAY

DECISION NOTING
JOINDER OF INVENTOR

This is in response to the Request for Reconsideration Petition, under 37 CFR 1.47(a), filed May 13, 2005, noting the joinder of the inventor.

In view of the joinder of the inventor, further consideration under 37 CFR 1.47(a) is not necessary and the Reconsideration of Petition is considered to be moot. This application does not have any Rule 1.47(a) status and no such status should appear on the file wrapper. This application need not be returned to this Office for further consideration under 37 CFR 1.47(a).

The application file is being referred to the Office of Initial Patent Examination for continued processing.

Telephone inquiries related to this decision may be directed to the undersigned at (571) 272-3232.

Derek L. Woods
Petitions Attorney
Office of Petitions

UNITED STATES PATENT AND TRADEMARK OFFICE

Commissioner for Patents
United States Patent and Trademark Office
P.O. Box 1450
Alexandria, VA 22313-1450
www.uspto.gov

GRAYBEAL JACKSON HALEY LLP
155-108TH AVE NE
SUITE 350
BELLEVUE WA 98004-5973

COPY MAILED

SEP 28 2007

OFFICE OF PETITIONS

ON PETITION

In re Application of :
Wiklof, et al. :
Application No. 10/795,199 :
Filed: March 5, 2004 :
Attorney Docket No. 1788-069-06 :

This is a decision on the petition filed on August 17, 2007, pursuant to 37 CFR 1.137(b), to revive the above-identified application.

The petition is **GRANTED**.

The above-identified application became abandoned for failure to timely file a reply to the Office action mailed on August 16, 2006, which set a shortened period for reply of one (1) month. No extensions of time under 37 CFR 1.136(a) were obtained. Accordingly, no reply having been received, the application became abandoned on September 17, 2006. The mailing of this decision precedes the mailing of a Notice of Abandonment.

With the instant petition, applicant paid the petition fee, submitted the required reply in the form of an Election, and made the proper statement of unintentional delay.

The matter is being forwarded to Group Art Unit 2618 for consideration of the Election, filed August 17, 2007.

Telephone inquiries concerning this decision should be directed to the undersigned at (571)272-3207.

Cliff Congo
Petitions Attorney
Office of Petitions

UNITED STATES PATENT AND TRADEMARK OFFICE

Commissioner for Patents
United States Patent and Trademark Office
P.O. Box 1450
Alexandria, VA 22313-1450
www.uspto.gov

COPY MAILED

FEB 14 2005

OFFICE OF PETITIONS

NIXON & VANDERHYE, PC
1100 N GLEBE ROAD
8TH FLOOR
ARLINGTON, VA 22201-4714

In re Application of
Hoffman et al.
Application No. 10/795,207
Filed: March 5, 2004
Attorney Docket No. 4574-2
For: LOW PROFILE D.C. BRUSHLESS MOTOR FOR AN IMPELLER MECHANISM OR THE LIKE

DECISION ACCORDING STATUS UNDER 37 CFR 1.47(a)

This is a decision on the petition under 37 CFR 1.47(a), filed September 27, 2004.

The petition is **granted**.

The above-identified application and papers have been reviewed and found in compliance with 37 CFR 1.47(a). This application is hereby accorded Rule 1.47(a) status.

As provided in Rule 1.47(c), this Office will forward notice of this application's filing to the non-signing inventor at the address given in the petition. Notice of the filing of this application will also be published in the Official Gazette.

A review of the declaration, as scanned into the computer system, reveals possible legibility concerns. Although the Office of Petition is not requiring a new declaration as a condition to grant the instant petition, petitioner may wish to take steps to ensure the Office has legible data. Petitioner may wish to file a supplemental Application Data Sheet which lists the three inventors with their information, such as addresses, clearly and legibly typed.

The assignee, ResMed, Ltd., New South Wales, Australia has been entered into the computer system so that the assignee's name will appear on any patent which issues from the application. However, the Office of Petitions was unable to verify the recordation of the assignment using the Office's internal PALM computer system. Petitioner may wish to contact Assignment Branch pto ensure both the assignments have been recorded. Assignment Branch can be reached at 703-308-9723.

After this decision is mailed, the Office of Initial Patent Examination will be informed of the instant decision and will continue to process the application.

Telephone inquiries should be directed to Petitions Attorney Steven Brantley at (571) 272-3203.

Charles Steven Brantley
Petitions Attorney
Office of Petitions

Attached: Corrected Filing Receipt

UNITED STATES PATENT AND TRADEMARK OFFICE

Commissioner for Patents
United States Patent and Trademark Office
P.O. Box 1450
Alexandria, VA 22313-1450
www.uspto.gov

Leslie C. Hoffman
10445 Wilshire Blvd
Penthouse
Westwood, CA 90024

COPY MAILED

FEB 14 2005

OFFICE OF PETITIONS

In re Application of
Hoffman et al.
Application No. 10/795,207
Filed: March 5, 2004
Attorney Docket No. 4574-2
For: LOW PROFILE D.C. BRUSHLESS MOTOR FOR AN IMPELLER MECHANISM OR THE LIKE

Letter

Dear Mr. Hoffman:

You are named as a joint inventor in the above identified United States patent application, filed under the provisions of 35 U.S.C. 116 (United States Code), and 37 CFR 1.47(a), Rules of Practice in Patent Cases. Should a patent be granted on the application you will be designated therein as a joint inventor.

As a named inventor you are entitled to inspect any paper in the file wrapper of the application, order copies of all or any part thereof (at a prepaid cost per 37 CFR 1.19) or make your position of record in the application. Alternatively, you may arrange to do any of the preceding through a registered patent attorney or agent presenting written authorization from you. If you care to join the application, counsel of record (see below) would presumably assist you. Joining in the application would entail the filing of an appropriate oath or declaration by you pursuant to 37 CFR 1.63.

Requests for information regarding your application should be directed to the File Information Unit at (703)308-2733. Information regarding how to pay for and order a copy of the application, or a specific paper in the application, should be directed to Certification Division at (703)308-9726 or 1(800)972-6382 (outside the Washington D.C. area).

Telephone inquiries regarding this communication should be directed to Petitions Attorney Steven Brantley at (571) 272-3203.

Charles Steven Brantley
Petitions Attorney
Office of Petitions

cc: NIXON & VANDERHYE, PC
1100 N GLEBE ROAD
8TH FLOOR
ARLINGTON, VA 22201-4714

UNITED STATES PATENT AND TRADEMARK OFFICE

Commissioner for Patents
United States Patent and Trademark Office
P.O. Box 1450
Alexandria, VA 22313-1450
www.uspto.gov

Liniak, Berenato & White
6550 Rock Spring Drive
Suite 240
Bethesda, MD 20817

COPY MAILED
MAY 15 2006
OFFICE OF PETITIONS

In re Application of	:	
Saied Hussaini, et al.	:	
Application No. 10/795,217	:	DECISION ON PETITION
Filed: March 9, 2004	:	TO WITHDRAW
Attorney Docket No. 8312.204	:	FROM RECORD
	:	

This is a decision on the Request to Withdraw as attorney or agent of record under 37 C.F.R. § 1.36(b), filed January 5, 2006.

The request is **APPROVED**.

A grantable request to withdraw as attorney/agent of record must be signed by every attorney/agent seeking to withdraw or contain a clear indication that one attorney is signing on behalf of another/others. A request to withdraw will not be approved unless at least 30 (thirty) days would remain between the date of approval and the later of the expiration date of a time to file a response or the expiration date of the maximum time period which can be extended under 37 C.F.R. § 1.136(a).

Thomas P. Liniak has been withdrawn as attorney or agent; all other attorney remain of record.

Telephone inquiries concerning this decision should be directed to Cheryl Gibson-Baylor at (571)272-3213.

Cheryl Gibson-Baylor

Cheryl Gibson-Baylor
Petitions Examiner
Office of Petitions

Conferee: Denise Pothier

UNITED STATES PATENT AND TRADEMARK OFFICE

Commissioner for Patents
United States Patent and Trademark Office
P.O. Box 1450
Alexandria, VA 22313-1450
www.uspto.gov

Liniak, Berenato & White
6550 Rock Spring Drive, Suite. 240
Bethesda MD 20817

COPY MAILED
AUG 2 2 2006
OFFICE OF PETITIONS

In re Application of	:	
Saied **HUSSAINI**, et al.	:	
Application No. 10/795,218	:	DECISION ON PETITION
Filed: March 9, 2004	:	TO WITHDRAW
Attorney Docket No. 8312.206	:	FROM RECORD
	:	

This is a decision on the Request to Withdraw as attorney or agent of record under 37 C.F.R. § 1.36(b), filed January 5, 2006.

The request is **APPROVED**.

A grantable request to withdraw as attorney/agent of record must be signed by every attorney/agent seeking to withdraw or contain a clear indication that one attorney is signing on behalf of another/others. A request to withdraw will not be approved unless at least 30 (thirty) days would remain between the date of approval and the later of the expiration date of a time to file a response or the expiration date of the maximum time period which can be extended under 37 C.F.R. § 1.136(a).

The request was signed by Thomas P. Liniak. Thomas P. has been withdrawn as attorney or agent of record; all other attorneys remain of record. The correspondence address of record remains unchanged.

Telephone inquiries concerning this decision should be directed to Monica A. Graves at 571-272-7253.

David Bucci
Petitions Examiner
Office of Petitions

UNITED STATES PATENT AND TRADEMARK OFFICE

UNITED STATES DEPARTMENT OF COMMERCE
United States Patent and Trademark Office
Address: COMMISSIONER FOR PATENTS
P.O. Box 1450
Alexandria, Virginia 22313-1450
www.uspto.gov

STANZIONE & KIM, LLP
919 18TH STREET, N.W.
SUITE 440
WASHINGTON, DC 20006

Mail Date: 04/21/2010

Applicant	: Jin-hyung Kim	: DECISION ON REQUEST FOR
Patent Number	: 7634273	: RECALCULATION of PATENT
Issue Date	: 12/15/2009	: TERM ADJUSTMENT IN VIEW
Appliction No	: 10/795,236	: OF WYETH AND NOTICE OF INTENT TO
Filed	: 03/09/2004	: ISSUE CERTIFICATE OF CORRECTION
		:

The Request for Recalculation is **GRANTED** to the extent indicated.

The patent term adjustment has been determined to be **50** days. The USPTO will *sua sponte* issue a certificate of correction reflecting the amount of PTA days determined by the recalculation.

Prior to the issuance of the certificate of correction, the USPTO will afford patentee an opportunity to be heard and request reconsideration. Accordingly, patentee has **one month or thirty (30) days**, whichever is longer, to file a request for reconsideration of this patent term adjustment calculation. See 35 U.S.C. 154(b)(3)(B)(ii) and 37 CFR 1.322(a)(4). No extensions of time will be granted under 37 CFR 1.136.

Patentee should use document code PET.OP if electronically filing a request for reconsideration of this patent term adjustment calculation. The patentee must also include the information required by 37 CFR 1.705(b)(2) and the fee required by 37 CFR 1.18(e). If patentee does not file a timely request for reconsideration of this patent term adjustment calculation including the information required by 37 CFR 1.705(b)(2) and the fee required by 37 CFR 1.18(e), the USPTO will issue a certificate of correction reflecting the PTA determination noted above.

Patentee should be aware that in order to preserve the right to review in the United States District Court for the District of Columbia of the USPTO patent term adjustment determination, patentee must ensure that he or she also take the steps required under 35 U.S.C. 154(b)(4)(A) in a timely manner. Nothing in the request for recalculation should be construed as providing an alternative time frame for commencing a civil action under 35 U.S.C. 154(b)(4)(A).

Any questions concerning this decision should be directed to the Office of Patent Legal Administration at 571-272-7702.

SPE RESPONSE FOR CERTIFICATE OF CORRECTION

Paper No.: _____

DATE : 01/05/07

TO SPE OF : ART UNIT 2852

SUBJECT : Request for Certificate of Correction for Appl. No.: **10/795258** Patent No.: **7039344**

Please respond to this request for a certificate of correction within 7 days.

Please review the requested changes/corrections as shown in the **COCIN** document(s) in the IFW application image. No new matter should be introduced, nor should the scope or meaning of the claims be changed.

Please complete the response (see below) and forward the completed response to scanning using document code **COCX**.

Angela Green
Certificates of Correction Branch
703.308.9380 ext. 123

Thank You For Your Assistance

The request for issuing the above-identified correction(s) is hereby:
Note your decision on the appropriate box.

- ☐ **Approved** — **All** changes apply.
- ☑ **Approved in Part** — Specify below which changes **do not** apply.
- ☐ **Denied** — State the reasons for denial below.

Comments: The following changes do not apply:
① Column 6, Line 42, "8 bits" should read --8 bits-- is unclear.
② Column 13, Line 13, "tin-free" is not disclosed in the patent.
③ Column 14, Line 58, "provided at each" should ??? is unclear.

DAVID M. GRAY
SUPERVISORY PATENT EXAMINER
SPE

2852
Art Unit

UNITED STATES PATENT AND TRADEMARK OFFICE

UNITED STATES DEPARTMENT OF COMMERCE
United States Patent and Trademark Office
Address: COMMISSIONER FOR PATENTS
P.O. Box 1450
Alexandria, Virginia 22313-1450
www.uspto.gov

APPLICATION NO.	FILING DATE	FIRST NAMED INVENTOR	ATTORNEY DOCKET NO.	CONFIRMATION NO.
10/795,261	03/09/2004	Shinya Masunaga	250082US6	2045

7590 02/13/2008
OBLON, SPIVAK, MCCLELLAND MAIER & NEUSTADT, P.C.
1940 DUKE STREET
ALEXANDRIA, VA 22314

EXAMINER
GUPTA, MUKTESH G

ART UNIT	PAPER NUMBER
4121	

NOTIFICATION DATE	DELIVERY MODE
02/13/2008	ELECTRONIC

DECISION GRANTING PETITION UNDER 37 CFR 1.138(d)

The declaration of express abandonment is recognized

This is in response to the petition under 37 CFR 1.138(d), requesting for a refund of any previously paid search fee and excess claims fee in the above-identified application.

The petition is granted.

The express abandonment is recognized. Any previously paid search fee and excess claims fee are hereby refunded.

Telephone inquiries should be directed to the Office of Data Management at (571) 272-4200.

Patent Publication Branch
Office of Data Management

```
Adjustment date: 02/12/2008  KKING1
03/11/2004 FFANAEIA 00000055 10795261
02 FC:1201                    -430.00 OP
03 FC:1202                    -198.00 OP


Refund Ref:
02/12/2008          0030050463
----------------------------------------

Credit Card Refund Total:      $628.00

Am Exp..: XXXXXXXXXXX1001
```


FORM PET651G (Rev. 08/07)

UNITED STATES PATENT AND TRADEMARK OFFICE

UNITED STATES DEPARTMENT OF COMMERCE
United States Patent and Trademark Office
Address: COMMISSIONER FOR PATENTS
P.O. Box 1450
Alexandria, Virginia 22313-1450
www.uspto.gov

STITES & HARBISON PLLC
1199 NORTH FAIRFAX STREET
SUITE 900
ALEXANDRIA, VA 22314

Mail Date: 04/21/2010

Applicant	: Joseph M. Patti	: DECISION ON REQUEST FOR
Patent Number	: 7666438	: RECALCULATION of PATENT
Issue Date	: 02/23/2010	: TERM ADJUSTMENT IN VIEW
Appliction No	: 10/795,267	: OF WYETH AND NOTICE OF INTENT TO
Filed	: 03/09/2004	: ISSUE CERTIFICATE OF CORRECTION
		:

The Request for Recalculation is **GRANTED** to the extent indicated.

The patent term adjustment has been determined to be **743** days. The USPTO will *sua sponte* issue a certificate of correction reflecting the amount of PTA days determined by the recalculation.

Prior to the issuance of the certificate of correction, the USPTO will afford patentee an opportunity to be heard and request reconsideration. Accordingly, patentee has **one month or thirty (30) days**, whichever is longer, to file a request for reconsideration of this patent term adjustment calculation. See 35 U.S.C. 154(b)(3)(B)(ii) and 37 CFR 1.322(a)(4). No extensions of time will be granted under 37 CFR 1.136.

Patentee should use document code PET.OP if electronically filing a request for reconsideration of this patent term adjustment calculation. The patentee must also include the information required by 37 CFR 1.705(b)(2) and the fee required by 37 CFR 1.18(e). If patentee does not file a timely request for reconsideration of this patent term adjustment calculation including the information required by 37 CFR 1.705(b)(2) and the fee required by 37 CFR 1.18(e), the USPTO will issue a certificate of correction reflecting the PTA determination noted above.

Patentee should be aware that in order to preserve the right to review in the United States District Court for the District of Columbia of the USPTO patent term adjustment determination, patentee must ensure that he or she also take the steps required under 35 U.S.C. 154(b)(4)(A) in a timely manner. Nothing in the request for recalculation should be construed as providing an alternative time frame for commencing a civil action under 35 U.S.C. 154(b)(4)(A).

Any questions concerning this decision should be directed to the Office of Patent Legal Administration at 571-272-7702.

UNITED STATES PATENT AND TRADEMARK OFFICE

Commissioner for Patents
United States Patent and Trademark Office
P.O. Box 1450
Alexandria, VA 22313-1450
www.uspto.gov

MAILED
FROM DIRECTORS OFFICE

MAR 04 2005

TECHNOLOGY CENTER 3600

Richard C. Litman
LITMAN LAW OFFICES, LTD.
P.O. Box 15035
Arlington, VA 22215

In re application of Douglas R. French Application No. 10/795,289 Filed: March 09, 2004 For: REVERSE BARB SYSTEM FOR SCREWS AND NAILS	: : : :	**DECISION ON PETITION TO MAKE SPECIAL (APPLICANT'S AGE)**

This is a decision on the petition submitted on March 09, 2004, under 37 CFR 1.102 (c) to make the above-identified application special under the accelerated examination procedure set forth in MPEP 708.02, Section IV: Applicant's Age.

The petition is **GRANTED**.

An application may be accorded special status upon the filing of a petition providing evidence showing that the applicant is at least 65 years old. Such a showing may be provided by evidence such as a birth certificate or a statement from the applicant.

The evidence submitted with the petition is a declaration signed by Mr. French indicating that he is at least 65 years of age.

The examiner is directed (1) to make an interference search for possible interfering applications, (2) to promptly examine this application out of turn, and (3) if any interfering application is discovered, to examine such application simultaneously and state in the first official letter of such application that it is being taken out of turn because of a possible interference.

Petitioner is advised that this application will continue to be special, throughout its entire prosecution and pendency, including interference or appeal, if any, only if petitioner makes a prompt ***bona fide*** effort, in response to each Office action, to place the application in condition for allowance, even if it is necessary to conduct an interview with the examiner to accomplish this purpose.

SUMMARY: Petition to Make Special **GRANTED**.

Steven N. Meyers
Special Programs Examiner
Patent Technology Center 3600
(703) 308-3868

SNM/pav: 02/14/05

UNITED STATES PATENT AND TRADEMARK OFFICE

Commissioner for Patents
United States Patent and Trademark Office
P.O. Box 1450
Alexandria, VA 22313-1450
www.uspto.gov

HANSEN HUANG TECHNOLOGY LAW GROUP, LLP
1725 EYE STREET, NW
SUITE 300
WASHINGTON, DC 20006

COPY MAILED

MAR 17 2008

In re Application of	:	
David D. Goodman	:	
Application No. 10/795,291	:	DECISION ON PETITION
Filed: March 9, 2004	:	TO WITHDRAW
Attorney Docket No. 1001-011	:	FROM RECORD
	:	

This is a decision on the Request to Withdraw as attorney or agent of record under 37 C.F.R. § 1.36(b) filed September 19, 2007.

The request is **DISMISSED** as moot.

A review of the file record indicates that the power of attorney to Hansen Huang Technology Law Group, LLP has been revoked by the applicant of the patent application on July 9, 2007. Accordingly, the request to withdraw under 37 C.F.R. § 1.36(b) is moot.

All future communications from the Office will continue to be directed to the below-listed address until otherwise notified by applicant.

Telephone inquires concerning this decision should be directed to undersigned at 571-272- 1642.

April M. Wise
Petitions Examiner
Office of Petitions

cc: DAVID D. GOODMAN
5326 BALTIMORE AVENUE
CHEVY CHASE, MD 20815

UNITED STATES PATENT AND TRADEMARK OFFICE

Commissioner for Patents
United States Patent and Trademark Office
P.O. Box 1450
Alexandria, VA 22313-1450
www.uspto.gov

DAVID D. GOODMAN
5326 BALTIMORE AVE
CHEVY CHASE MD 20815

COPY MAILED

SEP 14 2009

OFFICE OF PETITIONS

In re Application of	:	
Goodman	:	
Application No. 10/795,291	:	DECISION
Filed: 9 March, 2004	:	
Attorney Docket No. 1001-011	:	

This is a decision on the petition filed on 1 June, 2009, for revival of an application abandoned due to unintentional delay under 37 C.F.R. §1.137(b).

> **NOTE:** On 19 June, 2009, Petitioner *pro se* filed a paper which purported to be a Revocation/Power of Attorney, however, in light of the data inserted into the form, it appears that Petitioner may have intended instead only to file a Notice of Change of Address (form enclosed).
>
> *Petitioner is placed on Notice that because Petitioner's intentions are unclear, no change of address has been entered as of this writing.* The Office will not attempt to interpret Petitioner's intention(s).
>
> *If it is Petitioner's intention only to change the correspondence address, the completed form (PTO/SB/122) must be submitted immediately.*
>
> If, however, it is Petitioner's intent to have entered a new Revocation/Power of Attorney, Petitioner must so Notice the Office—and should do so without delay.
>
> As a courtesy, a copy of this decision will sent to Petitioner, however, *no change as to correspondence address will be made until the proper papers are submitted.*

The petition under 37 C.F.R. §1.137(b) is **GRANTED**.

As to the Allegations
of Unintentional Delay

The requirements of a grantable petition pursuant to 37 C.F.R. §1.137(b) are the petition and fee therefor, a reply, a proper statement of unintentional delay under the regulation, and, where applicable, a terminal disclaimer and fee. (It does not appear that a terminal disclaimer and fee are due here.)

Petitioners attentions always are directed to the guidance in the Commentary at MPEP §711.03(c)(II).

BACKGROUND

The record reflects as follows:

Petitioner failed to reply timely and properly to the non-final Office action mailed on 20 May, 2008, with reply due absent extension of time on or before 20 August, 2008.

The application went abandoned by operation of law after midnight 20 August, 2008.

The Office mailed the Notice of Abandonment on 23 December, 2009.

On 1 June, 2009, Petitioner *pro se* David Goodman filed, *inter alia*, a petition (with fee—it appears that a previous fee deficiency was resolved on or about 19 June, 2009) pursuant to 37 C.F.R. §1.137(b), with a reply in the form of an amendment and a statement of unintentional delay. The extended period of delay is noted.

The record (including the petition filed on 1 June, 2009) does not necessitate a finding that the delay between midnight 20 August, 2008 (date of abandonment), and 1 June, 2009 (date of filing of grantable petition), was not unintentional.

Rather, the Patent and Trademark Office is relying in this matter on the duty of candor and good faith of Applicant/Petitioner David Goodman when accepting Petitioner's representation that the delay in filing the response was unintentional.[1]

Petitioners attentions always are directed to the guidance in the Commentary at MPEP §711.03(c)(II).

---

[1] See Changes to Patent Practice and Procedure, 62 Fed. Reg. at 53160 and 53178, 1203 Off. Gaz. Pat. Office at 88 and 103 (responses to comments 64 and 109)(applicant obligated under 37 C.F.R. §10.18 to inquire into the underlying facts and circumstances when providing the statement required by 37 C.F.R. §1.137(b) to the Patent and Trademark Office).

The availability of applications and application papers online to applicants/practitioners who diligently associate their Customer Number with the respective application(s) now provides an applicant/practitioner on-demand information as to events/transactions in an application.

Out of an abundance of caution, Petitioners always are reminded that those registered to practice and all others who make representations before the Office **must** inquire into the underlying facts of representations made to the Office and support averments with the appropriate documentation–since all owe to the Office the continuing duty to disclose.[2]

STATUTES, REGULATIONS AND ANALYSIS

Congress has authorized the Commissioner to "revive an application if the delay is shown to the satisfaction of the Commissioner to have been "unavoidable." 35 U.S.C. §133 (1994).[3]
The regulations at 37 C.F.R. §1.137(a) and (b) set forth the requirements for a Petitioner to revive a previously unavoidably or unintentionally, respectively, abandoned application under this congressional grant of authority.

Unintentional delays are those that do not satisfy the very strict statutory and regulatory requirements of unavoidable delay, and also, by definition, are not intentional.[4]))

As to Allegations of Unintentional Delay

The requirements of a grantable petition pursuant to 37 C.F.R. §1.137(b) are the petition and fee therefor, a reply, a proper statement of unintentional delay under the regulation, and, where applicable, a terminal disclaimer and fee.

It appears that the requirements under 37 C.F.R. §1.137(b) have been satisfied.

---

[2] See supplement of 17 June, 1999. The Patent and Trademark Office is relying on petitioner's duty of candor and good faith and accepting a statement made by Petitioner. See Changes to Patent Practice and Procedure, 62 Fed. Reg. at 53160 and 53178, 1203 Off. Gaz. Pat. Office at 88 and 103 (responses to comments 64 and 109)(applicant obligated under 37 C.F.R. §10.18 to inquire into the underlying facts and circumstances when providing statements to the Patent and Trademark Office).

[3] 35 U.S.C. §133 provides:

35 U.S.C. §133 Time for prosecuting application.

Upon failure of the applicant to prosecute the application within six months after any action therein, of which notice has been given or mailed to the applicant, or within such shorter time, not less than thirty days, as fixed by the Commissioner in such action, the application shall be regarded as abandoned by the parties thereto, unless it be shown to the satisfaction of the Commissioner that such delay was unavoidable.

[4] Therefore, by example, an unintentional delay in the reply might occur if the reply and transmittal form are to be prepared for shipment by the US Postal Service, but other pressing matters distract one's attention and the mail is not timely deposited for shipment.

CONCLUSION

Accordingly, the petition under 37 C.F.R. §1.137(b) is **granted**.

The instant application is released to the Technology Center/AU 2111 for further processing in due course.

Petitioner may find it beneficial to view Private PAIR within a fortnight of the instant decision to ensure that the revival has been acknowledged by the TC/AU in response to this decision. It is noted that all inquiries with regard to that change in status need be directed to the TC/AU where that change of status must be effected—that does not occur in the Office of Petitions.

Telephone inquiries regarding this decision may be directed to the undersigned at (571) 272-3214—it is noted, however, that all practice before the Office is in writing (see: 37 C.F.R. §1.2[5]) and the proper authority for action on any matter in this regard are the statutes (35 U.S.C.), regulations (37 C.F.R.) and the commentary on policy (MPEP). Therefore, no telephone discussion may be controlling or considered authority for Petitioner's action(s).

/John J. Gillon, Jr./
John J. Gillon, Jr.
Senior Attorney
Office of Petitions

cc
DAVID D. GOODMAN
5306 WESTPORT
CHEVY CHASE MD 20815

[5] The regulations at 37 C.F.R. §1.2 provide:
§1.2 Business to be transacted in writing.
All business with the Patent and Trademark Office should be transacted in writing. The personal attendance of applicants or their attorneys or agents at the Patent and Trademark Office is unnecessary. The action of the Patent and Trademark Office will be based exclusively on the written record in the Office. No attention will be paid to any alleged oral promise, stipulation, or understanding in relation to which there is disagreement or doubt.

UNITED STATES PATENT AND TRADEMARK OFFICE

Commissioner for Patents
United States Patent and Trademark Office
P.O. Box 1450
Alexandria, VA 22313-1450
www.uspto.gov

HARRITY SNYDER, LLP
11350 RANDOM HILLS ROAD
SUITE 600
FAIRFAX, VA 22030

COPY MAILED

JAN 0 2 2008

OFFICE OF PETITIONS

In re Application of :
Ryota Motobayashi :
Application No. 10/795,299 : ON PETITION
Filed: March 9, 2004 :
Attorney Docket No. 0050-012DIV1 :

This is a decision on the petition under the unintentional provisions of 37 CFR 1.137(b), filed August 27, 2007, to revive the above-identified application.

The petition is **GRANTED**.

The application became abandoned for failure to timely file a reply within the meaning of 37 CFR 1.113 to the final Office action of December 20, 2006. The proposed reply required for consideration of a petition to revive must be a Notice of Appeal (and appeal fee required by 37 CFR 41.20(b)(2), an amendment that *prima facie* places the application in condition for allowance, a Request for Continued Examination and submission (37 CFR 1.114), or the filing of a continuing application under 37 CFR 1.53(b). See MPEP 711.03(c)(II)(A)(2). No extensions of time pursuant to the provisions of 37 CFR 1.136(a) were obtained. Accordingly, the date of abandonment of this application is March 21, 2007.

The petition satisfies the requirements of 37 CFR 1.137(b) in that petitioner has supplied (1) the reply in the form of a Request for Continued Examination (RCE) and fee of $790, and the submission required by 37 CFR 1.114; (2) the petition fee of $1500; (3) a proper statement of unintentional delay and (4) a terminal disclaimer and fee.

Telephone inquiries concerning this decision should be directed to the undersigned at (571) 272-1642.

This application is being referred to Technology Center AU 2616 for processing of the RCE and for appropriate action by the Examiner in the normal course of business on the amendment submitted in accordance with 37 CFR 1.114.

April M. Wise
Petitions Examiner
Office of Petitions

UNITED STATES PATENT AND TRADEMARK OFFICE

UNITED STATES DEPARTMENT OF COMMERCE
United States Patent and Trademark Office
Address: COMMISSIONER FOR PATENTS
P.O. Box 1450
Alexandria, Virginia 22313-1450
www.uspto.gov

APPLICATION NO.	FILING DATE	FIRST NAMED INVENTOR	ATTORNEY DOCKET NO.	CONFIRMATION NO.
10/795,299	03/09/2004	Ryota Motobayashi	0050-0126DIV1	2850

44987 7590 11/20/2009
HARRITY & HARRITY, LLP
11350 Random Hills Road
SUITE 600
FAIRFAX, VA 22030

EXAMINER
DUONG, FRANK

ART UNIT	PAPER NUMBER
2616	

MAIL DATE	DELIVERY MODE
11/20/2009	PAPER

Please find below and/or attached an Office communication concerning this application or proceeding.

The time period for reply, if any, is set in the attached communication.

SPE RESPONSE FOR CERTIFICATE OF CORRECTION

Paper No.:20091112

DATE : July 15, 2008

TO SPE OF : ART UNIT 2474

SUBJECT : Request for Certificate of Correction on Patent No.: 7,391,726

A response is requested with respect to the accompanying request for a certificate of correction.

Please complete this form and return with file, within **7** days to:
Certificates of Correction Branch - ST (South Tower) 9A22
Palm location **7590** - Tel. No. (703) 305-8309

With respect to the change(s) requested, correcting Office and/or Applicant's errors, should the patent read as shown in the certificate of correction? No new matter should be introduced, nor should the scope or meaning of the claims be changed.

Thank You For Your Assistance **Certificates of Correction Branch**

The request for issuing the above-identified correction(s) is hereby:

Note your decision on the appropriated box.

☒ **Approved** All changes apply.

☐ **Approved in Part** Specify below which changes **do not** apply.

☐ **Denied** State the reasons for denial below.

Comments:

/Aung S. Moe/
Supervisory Patent Examiner, Art Unit 2474

UNITED STATES PATENT AND TRADEMARK OFFICE

Commissioner for Patents
United States Patent and Trademark Office
P.O. Box 1450
Alexandria, VA 22313-1450
www.uspto.gov

November 29, 2006

Patent No. : 7,021,066 B2
Ser. No. : 10/795319
Inventor(s) : Chung
Issued : April 4, 2006
Title : **CONTROL METHOD FOR REFRIGERATOR**
Docket No. :

Re: Request for Certificate of Correction

Consideration has been given your request for the issuance of a certificate of correction for the above-identified patent.

Comparison of the patent on Title Page, item 56, with the corresponding location in the application file reveals that there is no discrepancy.

In view of the foregoing, your request is hereby denial.

Elisha Evans
For Cecelia Newman, Supervisor
Decisions & Certificates
of Correction Branch
(703) 308-9390 ext. 110

GREENBLUM & BERNSTEIN, P.L.C.
1950 ROLAND CLARKE PLACE
RESTON VA 20191

CBN/eme

UNITED STATES PATENT AND TRADEMARK OFFICE

COMMISSIONER FOR PATENTS
UNITED STATES PATENT AND TRADEMARK OFFICE
P.O. BOX 1450
ALEXANDRIA, VA 22313-1450
www.uspto.gov

COPY MAILED
JUL 28 2006
OFFICE OF PETITIONS

FITZPATRICK CELLA HARPER & SCINTO
30 ROCKEFELLER PLAZA
NEW YORK NY 10112

In re Application of	:
Takahashi	: DECISION ON PETITION
Application No. 10/795,321	:
Filed: March 9, 2004	:
Docket No.: 03500.013903.1	:

This is a decision on the petition to revive under 37 CFR 1.181, filed June 30, 2006.

This application was held abandoned December 22, 2005 for failure to timely submit a proper reply to the non-final Office action mailed September 21, 2005. Notice of Abandonment was mailed June 5, 2006.

Petitioner asserts non-receipt of the non-final Office action mailed September 21, 2005.

In the absence of any irregularity in the mailing of the non-final Office action, there is a strong presumption that the Office communication was properly mailed to practitioner at the address of record. This presumption may be overcome by a showing that the Notice was not in fact received. The showing required to establish non-receipt of an Office communication must include a statement from the practitioner stating that the Office communication was not received by the practitioner and attesting to the fact that a search of the file jacket and docket records indicates that the Office communication was not received. A copy of the docket record where the non-received Office communication would have been entered had it been received and docketed must be attached to and referenced in practitioner's statement. *See*, MPEP 711.03(c). The showing outlined above may not be sufficient if there are circumstances that point to a conclusion that the Office communication may have been lost after receipt rather than a conclusion that the Office communication was lost in the mail.

In support of the petition, petitioner has provided a copy of the docket record where the non-final Office action would have been entered had it been received along with a statement from petitioner that a search of the docket record and file jacket indicated that the non-final Office action was not received.

In view of the evidence presented, the Notice of Abandonment is hereby **VACATED**, the Notice of Abandonment is **WITHDRAWN**, and the petition is **GRANTED**.

The application file is being forwarded to the technical support staff of Technology Center 2600 for mailing of a new Office action. The time period for response will be set to run from the date the new Notice is mailed.

Telephone inquiries concerning this matter may be directed to the undersigned at (571) 272-3205.

Alesia M. Brown
Petitions Attorney
Office of Petitions

This Page Is Inserted by IFW Operations
and is not a part of the Official Record

BEST AVAILABLE IMAGES

Defective images within this document are accurate representations of the original documents submitted by the applicant.

Defects in the images may include (but are not limited to):

- BLACK BORDERS
- TEXT CUT OFF AT TOP, BOTTOM OR SIDES
- FADED TEXT
- ILLEGIBLE TEXT
- SKEWED/SLANTED IMAGES
- COLORED PHOTOS
- BLACK OR VERY BLACK AND WHITE DARK PHOTOS
- GRAY SCALE DOCUMENTS

IMAGES ARE BEST AVAILABLE COPY.

As rescanning documents *will not* correct images, please do not report the images to the Image Problem Mailbox.

UNITED STATES PATENT AND TRADEMARK OFFICE

COMMISSIONER FOR PATENTS
UNITED STATES PATENT AND TRADEMARK OFFICE
P.O. BOX 1450
ALEXANDRIA, VA 22313-1450
www.uspto.gov

JJGJR: 07-04

Paper No: __

OLIFF & BERRIDGE, PLC
P.O. BOX 19928
ALEXANDRIA VA 22320

COPY MAILED
JUL 14 2004
OFFICE OF PETITIONS

In re Application of
Wilton, et al. :
Application No. 10/795,339 : ON PETITION
Filed: 9 March, 2004 :
Attorney Docket No. 115249 :

This is a decision on the petition under ¶(a) of 37 C.F.R. §1.47, filed on 21 June, 2004

The petition is **DISMISSED**.

NOTES:

(1) Any reply must include a renewed petition (and fee) must include a petition under 37 C.F.R. §1.47 and must be submitted within two (2) months from the mail date of this decision. Extensions of time under 37 C.F.R. §1.136(a) are permitted. The reconsideration request should include a cover letter entitled "Petition under 37 C.F.R. §1.47";

(2) Thereafter, there will be no further reconsideration of this matter.

BACKGROUND

The record indicates:

- the application was filed on 9 March, 2004, without, *inter alia*, a fully executed oath or

declaration; and

- on 24 May, 2004, the Office mailed a Notice to File Missing Parts with a reply due absent extension of time on or before 24 July, 2004;

- on 21 June, 2004, Petitioner filed, *inter alia*, an oath/declaration signed by named inventors Wilton and Anderson, but without the signature of Robert W. Schmitz (Mr. Schmitz), a petition under 37 C.F.R. §1.47, and narrative by Petitioner Darle M. Short (Reg. No. 29,213), however, there was no document evidencing transmittal of the entire application to Mr. Schmitz, and a telephone inquiry to the Petitioner on 13 July, 2004, did not resolve the matter.

ANALYSIS

The regulations at 37 C.F.R. §1.47 provide in pertinent part:

> **§ 1.47 Filing when an inventor refuses to sign or cannot be reached.**
> (a) If a joint inventor refuses to join in an application for patent or cannot be found or reached after diligent effort, the application may be made by the other inventor on behalf of himself or herself and the nonsigning inventor. The oath or declaration in such an application must be accompanied by a petition including proof of the pertinent facts, the fee set forth in § 1.17(h), and the last known address of the nonsigning inventor. The nonsigning inventor may subsequently join in the application by filing an oath or declaration complying with §1.63.
>
> * * *

The regulations at 37 C.F.R. §1.63 provide in pertinent part:

> **§1.63 Oath or declaration.**
>
> (b) In addition to meeting the requirements of paragraph (a)of this section, the oath or declaration must also:
>
> (1)Identify the application to which it is directed;
>
> (2) State that the person making the oath or declaration has reviewed and understands the contents of the application, Including the claims, as amended by any amendment specifically referred to in the oath or declaration; and
>
> (3) State that the person making the oath or declaration acknowledges the duty to disclose to the Office all information known to the person to be material to

patentability as defined in § 1.56.

Thus, a copy of the entire application must be sent to the last known address of the non-signing inventor (or the estate representative) with a request that he/she sign the declaration for the patent application--and evidence of that transmittal submitted.

And a reasonable effort must be made to ascertain a current or last known address.

Alternatively, an oath or declaration for the patent application in compliance with 37 C.F.R. §§1.63 and 1.64 must be presented.

The declaration must set forth the inventor's residence, citizenship and post office address. An oath or declaration in compliance with 37 C.F.R. §§1.63 and 1.64 signed by the Rule 1.47 applicant is required.[1]

CONCLUSION

The materials submitted thus far do not clearly evidence that the entire application was sent to the alleged non-signing inventor. Petitioner should submit a copy of the transmittal letter.

Therefore, the instant petition hereby is **dismissed**.

Further correspondence with respect to this matter should be addressed as follows:

By mail: (Effective 1 May, 2003)[2]
Commissioner for Patents
P.O. Box 1450
Alexandria, VA 22313-1450

By FAX: (703) 872-9306 (IFW Formal Filings)
ATTN.: Office of Petitions

---

[1] See: MPEP 409.03(b).

[2] To determine the appropriate addresses for other subject-specific correspondence, refer to the USPTO Web site at www.uspto.gov.

By hand: Mail Stop: Petition
Customer Service Window
Lobby/Room 1B03
Crystal Plaza Two
220 20th Street S.
Arlington, VA 22202

Telephone inquiries regarding this decision should be directed to the undersigned at 703-305-9199.

John J. Gillon, Jr.
Senior Attorney
Office of Petitions

UNITED STATES PATENT AND TRADEMARK OFFICE

COMMISSIONER FOR PATENTS
UNITED STATES PATENT AND TRADEMARK OFFICE
P.O. BOX 1450
ALEXANDRIA, VA 22313-1450
www.uspto.gov

JJGJR.: 11-04

Paper No: __

ROBERT W. SCHMITZ
5748 WEST KEN CARYL PLACE
LITTLETON, CO 80128

COPY MAILED

NOV 08 2004

OFFICE OF PETITIONS

In re Application of
Wilton, et al. :
Application No. 10/795,339 : COMMUNICATION
Filed: 9 March, 2004 :
Attorney Docket No. 115249 :

Dear Robert W. Schmitz:

You are named as inventor in the above-identified United States patent application, filed under the provisions of 35 U.S.C. §116 (United States Code), and 37 C.F.R. §1.47, ¶a, Rules of Practice in Patent Cases.

Should a patent be granted on the application you will be designated therein as inventor.

As a named inventor you are entitled to inspect any paper in the file wrapper of the application, order copies of all or any part thereof (at a prepaid cost per 37 C.F.R. §1.19) or make your position of record in the application.

Alternatively, you may arrange to do any of the preceding through a registered patent attorney or agent presenting written authorization from you. If you care to join the application, counsel of record (see below) would presumably assist you. Joining in the application would entail the filing of an appropriate oath or declaration by you pursuant to 37 C.F.R. §1.63.

Requests for information regarding your application should be directed to the File Information Unit at (703) 308-2733.

Information regarding how to pay for and order a copy of the application, or a specific paper in

the application, should be directed to Certification Division at (703) 308-9726 or toll-free: (800) 972-6382 (outside the Washington D.C. area).

Telephone inquiries concerning this correspondence may be directed to the undersigned at (571) 272-3214.

John J. Gillon, Jr.
Senior Attorney
Office of Petitions

Counsel of Record:
OLIFF & BERRIDGE, PLC
P.O. BOX 19928
ALEXANDRIA VA 22320

UNITED STATES PATENT AND TRADEMARK OFFICE

COMMISSIONER FOR PATENTS
UNITED STATES PATENT AND TRADEMARK OFFICE
P.O. BOX 1450
ALEXANDRIA, VA 22313-1450
www.uspto.gov

JJGJR.: 11-04

Paper No: __

OLIFF & BERRIDGE, PLC
P.O. BOX 19928
ALEXANDRIA VA 22320

COPY MAILED

NOV 0 8 2004

OFFICE OF PETITIONS

In re Application of
Wilton, et al. :
Application No. 10/795,339 : ON PETITION
Filed: 9 March, 2004 :
Attorney Docket No. 115249 :

This is a decision on the petition under ¶(a) of 37 C.F.R. §1.47, filed on 19 August, 2004

The petition is **GRANTED**.

BACKGROUND

The record indicates:

- the application was filed on 9 March, 2004, without, *inter alia*, a fully executed oath or declaration; and

- on 24 May, 2004, the Office mailed a Notice to File Missing Parts with a reply due absent extension of time on or before 24 July, 2004;

- the 21 June, 2004, petition (filed with, *inter alia*, an oath/declaration signed by named inventors Wilton and Anderson, but without the signature of Robert W. Schmitz (Mr. Schmitz), a petition under 37 C.F.R. §1.47, and narrative by Petitioner Darle M. Short (Reg. No. 29,213), but absent documentation evidencing transmittal of the entire application to Mr. Schmitz) was dismissed on 14 July, 2004, for failing to satisfy the showing requirement under the regulation;

- the instant petition is accompanied by documentation evidencing that the entire application was transmitted to the non-signing inventor at his last known address.

Specifically, the declaration/statement/submission of facts of/by Petitioner Darle M. Short (Reg. No. 29,213) established that the non-signing inventor was mailed the application papers, including the specification, claims and drawings, but failed to respond positively to the request that they sign the declaration or in fact sign said declaration.

Lastly, Petitioner has submitted a declaration in compliance with 37 C.F.R. §1.63 and §1.64 and Petitioner has shown that such action is necessary to prevent irreparable damage.

This application and papers have been reviewed and found in compliance with 37 C.F.R. §1.47(a).

This application hereby is **ACCORDED status under 37 C.F.R. §1.47(a)**.

As provided under 37 C.F.R. §1.47(a), the Office will forward notice of this application's filing to the non-signing inventor at the address given in the petition.

Notice of the filing of this application also will be published in the Official Gazette.

This file is being forwarded to OIPE for processing as necessary to reflect the instant decision before being released for examination in due course.

Telephone inquiries concerning this decision may be directed to the undersigned at (571) 272-3214.

John J. Gillon, Jr.
Senior Attorney
Office of Petitions

UNITED STATES PATENT AND TRADEMARK OFFICE

Commissioner for Patents
United States Patent and Trademark Office
P.O. Box 1450
Alexandria, VA 22313-1450
www.uspto.gov

Paper No.

OLIFF & BERRIDGE, PLC
P.O. BOX 19928
ALEXANDRIA, VA 22320

COPY MAILED

JUL 21 2004

OFFICE OF PETITIONS

In re Application of Thomas Wilton, Joshua Anderson and Robert Schmitz Application No. 10/795,348 Filed: March 9, 2004 Attorney Docket No. 107168.03 Title: Method and apparatus for selective operation of a hybrid electric vehicle in various driving modes	DECISION ACCORDING STATUS UNDER 37 CFR 1.47(a)

This is a decision on the "PETITION UNDER 37 C.F.R. § 1.47(a)," filed June 21, 2004.

The petition is **GRANTED**.

The above-identified application was filed on March 9, 2004, without an executed declaration. Accordingly, on May 24, 2004, a "Notice to File Missing Parts of Nonprovisional Application" was mailed, requiring an executed oath or declaration and a surcharge for its late filing.

In response, rule 47 applicants timely filed the instant petition (and fee); the late surcharge; and a declaration executed by joint inventors Wilton and Anderson on behalf of themselves and on behalf of non-signing joint inventor Schmitz. Rule 47 applicants maintain that status under 37 CFR 1.47 is proper because joint inventor Schmitz refuses to join in the application for patent.

By declaration of patent attorney Darle Short, applicants have shown that the application papers were presented to the non-signing inventor, but he refused to join in the application. Inventor Schmitz by his conduct in not returning a signed declaration has shown refusal. In addition, the petition includes a letter written by inventor Schmitz to the assignee refusing any further relationship. The petition includes a statement of the last known address of the non-signing inventor.

The declaration filed June 21, 2004, and the petition have been reviewed and found in compliance with 37 CFR 1.47(a).

This application is hereby accorded Rule 1.47(a) status.

As provided in new Rule 1.47(c), this Office will forward notice of this application's filing to the non-signing inventor at the

address given in the petition. Notice of the filing of this application will also be published in the Official Gazette.

The application will be examined in Technology Center 3661 in due course.

Telephone inquiries regarding this decision should be directed to the undersigned at (703) 305-0309.

Nancy Johnson
Senior Petitions Attorney
Office of Petitions

UNITED STATES PATENT AND TRADEMARK OFFICE

Commissioner for Patents
United States Patent and Trademark Office
P.O. Box 1450
Alexandria, VA 22313-1450
www.uspto.gov

ROBERT SCHMITZ
5748 West Ken Caryl Place
Littleton, CO 80128

In re Application of
Thomas Wilton, Joshua Anderson and
Robert Schmitz
Application No. 10/795,348
Filed: March 9, 2004
Attorney Docket No. 107168.03
Title: Method and apparatus for
selective operation of a hybrid
electric vehicle in various driving
modes

LETTER

COPY MAILED
JUL 21 2004
OFFICE OF PETITIONS

Dear Mr. Schmitz:

You are named as a joint inventor in the above-identified United States patent application filed under the provisions of 35 U.S.C. 116 (United States Code) and 37 CFR 1.47(a), Rules of Practice in Patent Cases. Should a patent be granted on the application you will be designated therein as a joint inventor.

As a named inventor you are entitled to inspect any paper in the file wrapper of the application, order copies of all or any part thereof (at a prepaid cost per 37 CFR 1.19) or make your position of record in the application. Alternatively, you may arrange to do any of the preceding through a registered patent attorney or agent presenting written authorization from you. If you care to join the application, counsel of record (see below) would presumably assist you. Joining in the application would entail the filing of an appropriate oath or declaration by you pursuant to 37 CFR 1.63. However, no action on your part is required for this patent to issue with you as a named inventor.

Telephone inquiries regarding this communication should be directed to Petitions Attorney Nancy Johnson at (703) 305-0309. Requests for information regarding your application should be directed to the File Information Unit at (703) 308-2733. Information regarding how to pay for and order a copy of the application, or a specific paper in the application, should be directed to the Certification Division at (703) 308-9726 or 1-800-972-6382 (outside the Washington D.C. area).

Nancy Johnson

Nancy Johnson
Senior Petitions Attorney
Office of Petitions

OLIFF & BERRIDGE, PLC
P.O. BOX 19928
ALEXANDRIA, VA 22320

UNITED STATES PATENT AND TRADEMARK OFFICE

Commissioner for Patents
United States Patent and Trademark Office
P.O. Box 1450
Alexandria, VA 22313-1450
www.uspto.gov

US Army Corps of Engineers
Humphreys Engineer Center, CEHEC-OC
Kingman Building
7701 Telegraph Road
Alexandria VA 22315-3860

COPY MAILED

JAN 0 3 2007

OFFICE OF PETITIONS

In re Application of	:	
Castellane et al.	:	
Application No. 10/795,363	:	DECISION ON PETITION
Filed: March 9, 2004	:	TO MAKE SPECIAL UNDER
Attorney Docket No. COE-552	:	37 CFR 1.102(c)(2)
	:	

This is a decision on the petition under 37 CFR 1.102(c)(2)(iii), filed March 9, 2004, to make the above-identified application special based on the invention materially contributing to countering terrorism as set forth in M.P.E.P. § 708.02, Section XI.

The petition is **DISMISSED**.

A grantable petition to make an application special under 37 CFR 1.102(c)(2)(iii) and MPEP § 708.02, Section XI: Inventions for Countering Terrorism, should state that special status is sought because the invention materially contributes to countering terrorism. International terrorism as defined in 18 U.S.C. 2331 includes:

> activities that - (A) involve violent acts or acts dangerous to human life that are a violation of the criminal laws of the United States or of any State, or that would be a criminal violation if committed within the jurisdiction of the United States or of any State; [and] (B) appear to be intended - (i) to intimidate or coerce a civilian population; (ii) to influence the policy of a government by intimidation or coercion; or (iii) to affect the conduct of a government by assassination or kidnapping...

If the disclosure it not clear on its face that the claimed invention is materially directed to countering terrorism, the petition must be accompanied by a statement by the applicant, assignee or a registered attorney/agent explaining how the materiality standard is met. The types of technology for countering terrorism could include, but are not limited to, systems for detecting/identifying explosives, aircraft sensors/security systems, and vehicular barricades/disabling systems. No fee is required.

The USPTO's final rule amending 37 CFR 1.102(c)(2) states:

> The materially standard does not permit an applicant to speculate as to how a hypothetical end-user might specially apply the invention in a manner that could counter terrorism. Nor does such standard permit an applicant to enjoy the benefit of advance examination merely because some minor aspect of the claimed invention may be directed to countering terrorism...[Response to Comment 65] applicants should not expect to have their petitions granted without a clear demonstration that the claimed invention is materially related to countering terrorism. 69 Fed. Reg. 56511 (Sept. 21, 2004)

The instant invention is directed to a portable nuclear materials detector. That the instant invention could potentially provide enhanced detection capability, as alleged in the instant petition, does not in itself meet the materiality standard since the materially standard does not permit an applicant to speculate as to how a hypothetical end-user might specially apply the invention in a manner that could counter terrorism. Additionally, further steps would be required to actually offset or nullify terrorism. As a result, no advancement in the technology of countering terrorism has been persuasively shown.

Further correspondence with respect to this matter should be addressed as follows:

By Mail: Mail Stop PETITION
Commissioner for Patents
P. O. Box 1450
Alexandria, VA 22313-1450

By hand: U. S. Patent and Trademark Office
Customer Service Window, Mail Stop Petitions
Randolph Building
401 Dulany Street
Alexandria, VA 22314

By FAX: (571) 273-8300

Telephone inquiries concerning this decision should be directed to Jefferey Harold at 571-272-7519, or to the undersigned at 571-272-7099.

All other inquiries concerning either the examination or status of the application should be directed to the Technology Center.

The application is being forwarded to the Technology Center Art Unit 2884 for action in its regular turn.

David Bucci
Petitions Examiner
Office of Petitions

UNITED STATES PATENT AND TRADEMARK OFFICE

Commissioner for Patents
United States Patent and Trademark Office
P.O. Box 1450
Alexandria, VA 22313-1450
www.uspto.gov

OLIFF & BERRIDGE, PLC
P.O. BOX 19928
ALEXANDRIA VA 22320

COPY MAILED

AUG 30 2006

OFFICE OF PETITIONS

ON PETITION

In re Application of :
Mitsuru Sato et al :
Application No. 10/795,366 :
Filed: March 9, 2004 :
Attorney Docket No. 119046 :

This is a decision on the petition, filed August 28, 2006, under 37 CFR 1.313(c)(2) to withdraw the above-identified application from issue after payment of the issue fee.

The petition is **GRANTED**.

The above-identified application is withdrawn from issue for consideration of a submission under 37 CFR 1.114 (request for continued examination). See 37 CFR 1.313(c)(2).

Petitioner is advised that the issue fee paid on August 17, 2006, in the above-identified application cannot be refunded. If, however, the above-identified application is again allowed, petitioner may request that it be applied towards the issue fee required by the new Notice of Allowance.[1]

Telephone inquiries should be directed to the undersigned at (571) 272-3208.

The examiner of Technology Center AU 2813 will consider the request for continued examination under 37 CFR 1.114.

Karen Creasy
Petitions Examiner
Office of Petitions

---

[1] The request to apply the issue fee to the new Notice may be satisfied by completing and returning the new Issue Fee Transmittal Form PTOL-85(b), which includes the following language thereon: "Commissioner for Patents is requested to apply the Issue Fee and Publication Fee (if any) or re-apply any previously paid issue fee to the application identified above." Petitioner is advised that, whether a fee is indicated as being due or not, the Issue Fee Transmittal Form **must** be completed and timely submitted to avoid abandonment. Note the language in bold text on the first page of the Notice of Allowance and Fee(s) Due (PTOL-85).

DATE 8·28·07

APPLICATION NUMBER 10/795,371

DOC CODE Pet.Dec.TC

DOC DATE

DELIVER THE ATTACHED FIFLE/DOCUMENT TO THE TC SCANNING CENTER

CONTRACTOR: THE ATTACHED FILE/DOCUMENT MUST BE INDEXED AND SCANNED INTO IFW WITHIN **8** WORK HOURS; UPLOADING OF THE SCANNED IMAGES SHOULD OCCUR NO LATER THAN **16** WORK HOURS FOLLOWING RECEIPT OF THIS REQUEST

AFTER SCANNING, ORIGINAL DOCUMENTS SHOULD BE BOXED IN ACCORDANCE WITH INSTRUCTIONS

UNITED STATES PATENT AND TRADEMARK OFFICE

Commissioner for Patents
United States Patent and Trademark Office
P.O. Box 1450
Alexandria, VA 22313-1450
www.uspto.gov

THE PROCTER & GAMBLE COMPANY
INTELLECTUAL PROPERTY DIVISION
- WEST BLDG.
WINTON HILL BUSINESS CENTER -
BOX 412, 6250 CENTER HILL AVENUE
CINCINNATI OH 45224

COPY MAILED

SEP 0 4 2007

OFFICE OF PETITIONS

In re Application of	:	
Digiacomantonio et al.	:	
Application No. 10/795371	:	
Filing or 371(c) Date: 03/08/2004	:	ON PETITION
Attorney Docket Number:	:	
CM2602C	:	

This is a decision on the petition under 37 CFR 1.137(b), filed May 21, 2007, to revive the above-identified application. The delay in treating this petition is regretted.

This Petition is hereby **granted**.

The above-identified application became abandoned for failure to timely and properly reply to the non-final Office action, mailed November 1, 2005. The Office action set a three (3) month period for reply from the mail date of the Office action. Extensions of time were available under 37 CFR 1.136(a). No reply having been received, the application became abandoned on February 2, 2006. A Notice of Abandonment was mailed June 9, 2006.

Applicant files the present petition and includes an Amendment in response to the Office action. The petition satisfies the conditions for revival pursuant to the provisions of 37 CFR 1.137(b) in that (1) the reply in the form of an Amendment is filed with the present petition; (2) the petition fee; and (3) the required statement of unintentional delay. Accordingly, the reply is accepted as having been unintentionally delayed.

The application is being referred to Technology Center Art Unit 3671 for processing of the Amendment filed with the petition in due course.

Telephone inquiries concerning this decision should be directed to the undersigned at (571) 272-3232.

Derek L. Woods
Attorney
Office of Petitions

UNITED STATES PATENT AND TRADEMARK OFFICE

Commissioner for Patents
United States Patent and Trademark Office
P.O. Box 1450
Alexandria, VA 22313-1450
www.uspto.gov

The Procter & Gamble Company
Global Legal Department - IP
Sycamore Building - 4th Floor
299 East Sixth Street
Cincinnati, OH 45202

COPY MAILED

JUL 29 2009

OFFICE OF PETITIONS

In re Application of	:	
Marco Digiacomantonio, et. al.	:	
Application No. 10/795,371	:	ON PETITION
Filed: March 8, 2004	:	
Attorney Docket No. CM2602C	:	

This is a decision on the petition under 37 CFR 1.137(b), filed March 31, 2009, to revive the above-identified application.

The application became abandoned for failure to file a reply to the non-final Office action mailed on September 29, 2008.

The petition satisfies the requirements of 37 CFR 1.137(b) in that petitioner has supplied (1) the reply in the form of an amendment; (2) the petition fee of $1,620; and (3) a proper statement of unintentional delay. Therefore, the petition is **GRANTED**.

This application file is being referred to Technology Center Art Unit 3761 for review of the amendment filed with the present petition.

Telephone inquiries concerning this decision should be directed to the undersigned at (571) 272-3226.

Andrea Smith
Petitions Examiner
Office of Petitions

UNITED STATES PATENT AND TRADEMARK OFFICE

COMMISSIONER FOR PATENTS
UNITED STATES PATENT AND TRADEMARK OFFICE
P.O. BOX 1450
ALEXANDRIA, VA 22313-1450
www.uspto.gov

Paper No.

FISH & RICHARDSON PC
P.O. BOX 1022
MINNEAPOLIS MN 55440-1022

MAILED

JUN 14 2010

OFFICE OF PETITIONS

In re Patent No. 7,594,227	: DECISION ON REQUEST
Inchingolo et al.	: FOR
Issue Date: September 22, 2009	: RECONSIDERATION OF
Application No. 10/795,374	: PATENT TERM ADJUSTMENT
Filed: March 8, 2004	: and
Atty Docket No. 07470-071001	: NOTICE OF INTENT TO ISSUE
	: CERTIFICATE OF CORRECTION

This is a decision on the petition filed on November 18, 2009, which is being treated as a petition under 37 CFR 1.705(d) requesting that the patent term adjustment indicated on the above-identified patent be corrected to indicate that the term of the above-identified patent is extended or adjusted by one thousand, five hundred and forty-four (1544) days.

The petition to correct the patent term adjustment indicated on the above-identified patent to indicate that the term of the above-identified patent is extended or adjusted by one thousand, five hundred and forty-four (1544) days is **GRANTED**.

The Office acknowledges submission of the $200.00 fee set forth in 37 CFR 1.18(e). No additional fees are required.

The application is being forwarded to the Certificates of Branch for issuance of a certificate of correction. The Office will issue a certificate of correction indicating that the term of the above-identified patent is extended or adjusted by **one thousand, five hundred and forty-four (1544) days.**

Telephone inquiries specific to this matter should be directed to Senior Attorney Paul Shanoski at (571) 272-3225.

Nancy Johnson
Senior Petitions Attorney
Office of Petitions

Enclosure: Copy of DRAFT Certificate of Correction

UNITED STATES PATENT AND TRADEMARK OFFICE

CERTIFICATE OF CORRECTION

PATENT : 7,594,227 B2

DATED : **September 22, 2009** **DRAFT**

INVENTOR(S) : **Inchingolo et al.**

It is certified that error appears in the above-identified patent and that said Letters Patent is hereby corrected as shown below:

On the cover page,

[*] Notice: Subject to any disclaimer, the term of this patent is extended or adjusted under 35 USC 154(b) by 990 days

Delete the phrase "by 990 days" and insert – by 1544 days --

UNITED STATES PATENT AND TRADEMARK OFFICE

COMMISSIONER FOR PATENTS
UNITED STATES PATENT AND TRADEMARK OFFICE
P.O. BOX 1450
ALEXANDRIA, VA 22313-1450
www.uspto.gov

ARMSTRONG, KRATZ, QUINTOS, HANSON & BROOKS, LLP
1725 K STREET, NW
SUITE 1000
WASHINGTON DC 20006

COPY MAILED

APR 26 2007

OFFICE OF PETITIONS

In re Application of	:	
Hiramatsu, et al.	:	
Application No. 10/795,419	:	ON PETITION
Filed: March 9, 2004	:	
Attorney Docket No. 040018	:	

This is a decision on the petition under 37 CFR 1.137(a), filed March 28, 2007, to revive the above-identified application. The petition will be treated as a feeless petition under 37 CFR 1.181 to withdraw of the holding of abandonment in the above-identified application.

The petition under 37 CFR 1.181 to withdraw the holding of abandonment is **GRANTED**.

The petition under 37 CFR 1.137(a) is **DISMISSED AS MOOT**.

The above-identified application was held abandoned for failure to timely reply to the non-final Office action, mailed May 10, 2006, which set a three month extendable period for reply. Having received no extensions of time under 37 CFR 1.136(a) and having received no reply, the Office considered the application abandoned on August 11, 2006. The filing of the present petition precedes the mailing of A Notice of Abandonment.

Petitioners allege that the May 10, 2006 non-final Office action was not received at the proper correspondence address of record and therefore, the application is not really abandoned. The undersigned finds this assertion completely convincing because the May 10, 2006 non-final Office was mailed to an incorrect address.

A Correction of Inventor's Address was filed on October 6, 2004. Unfortunately, this correspondence was entered into Office databases as a change in correspondence address for the

application. This Office error resulted in the May 10, 2006 non-final Office action being mailed to an incorrect address.

The petition under 37 CFR 1.181 is **GRANTED** and the holding of abandonment is withdrawn. The $500.00 petition fee filed with the petition under 37 CFR 1.137(a) on March 28, 2007 will be credited to deposit account no. 01-2340.

It is unnecessary to re-mail the May 10, 2006 non-final Office action because petitioners have filed a response with the present petition.

After the mailing of this decision, the application file will be forwarded to Technology Center A.U. 1712 for consideration of the amendment filed on March 28, 2007.

Telephone inquiries concerning this matter may be directed to the undersigned at (571) 272-3230.

Shirene Willis Brantley

Shirene Willis Brantley
Senior Petitions Attorney
Office of Petitions

PTO/SB/66 (03-09)
Approved for use through 03/31/2012. OMB 0651-0016
U.S. Patent and Trademark Office: U.S. DEPARTMENT OF COMMERCE
Under the Paperwork Reduction Act of 1995, no persons are required to respond to a collection of information unless it displays valid OMB control number.

PETITION TO ACCEPT UNINTENTIONALLY DELAYED PAYMENT OF MAINTENANCE FEE IN AN EXPIRED PATENT (37 CFR 1.378(c))

Patent Number	Issue Date (YYYY-MM-DD)	Application Number	Filing Date (YYYY-MM-DD)	Docket Number (if applicable)
6955215	2005-10-18	10795420	2004-03-09	3055D-0014

CAUTION: Maintenance fee (and surcharge, if any) payment must correctly identify: (1) the patent number and (2) the application number of the actual U.S. application leading to issuance of that patent to ensure the fee(s) is/are associated with the correct patent. 37 CFR 1.366(c) and (d).

SMALL ENTITY
☒ Patentee claims, or has previously claimed, small entity status. See 37 CFR 1.27.

LOSS OF ENTITLEMENT TO SMALL ENTITY STATUS
☐ Patentee is no longer entitled to small entity status. See 37 CFR 1.27(g)

NOT Small Entity		Small Entity	
Fee	Code	Fee	Code
○ 3 ½ year	(1551)	◉ 3 ½ year	(2551)
○ 7 ½ year	(1552)	○ 7 ½ year	(2552)
○ 11 ½ year	(1553)	○ 11 ½ year	(2553)

SURCHARGE
The surcharge required by 37 CFR 1.20(i)(2) (Fee Code 1558) must be paid as a condition of accepting unintentionally delayed payment of the maintenance fee.

MAINTENANCE FEE (37 CFR 1.20(e)-(g))
The appropriate maintenance fee must be submitted with this petition.

STATEMENT
THE UNDERSIGNED CERTIFIES THAT THE DELAY IN PAYMENT OF THE MAINTENANCE FEE TO THIS PATENT WAS UNINTENTIONAL

PETITIONER(S) REQUEST THAT THE DELAYED PAYMENT OF THE MAINTENANCE FEE BE ACCEPTED AND THE PATENT REINSTATED

THIS PORTION MUST BE COMPLETED BY THE SIGNATORY OR SIGNATORIES

37 CFR 1.378(d) states: "Any petition under this section must be signed by an attorney or agent registered to practice before the Patent and Trademark Office, or by the patentee, the assignee, or other party in interest."

I certify, in accordance with 37 CFR 1.4(d)(4) that I am

◉ An attorney or agent registered to practice before the Patent and Trademark Office

○ A sole patentee

○ A joint patentee; I certify that I am authorized to sign this submission on behalf of all the other patentees.

○ A joint patentee; all of whom are signing this e-petition

○ The assignee of record of the entire interest

Patent Practitioner			
A signature of the applicant or representative is required in accordance with 37 CFR 1.33 and 10.18. Please see 37 CFR 1.4(d) for the form of the signature			
Signature	/David E. Dougherty/	Date (YYYY-MM-DD)	2010-02-23
Name	David E. Dougherty	Registration Number	19576

This collection of information is required by 37 CFR 1.378(c). The information is required to obtain or retain a benefit by the public which is to file (and by the USPTO to process) an application. Confidentiality is governed by 35 U.S.C. 122 and 37 CFR 1.11 and 1.14. This collection is estimated to take 1 hour to complete, including gathering, preparing, and submitting the completed application form to the USPTO. Time will vary depending upon the individual case. Any comments on the amount of time you require to complete this form and/ or suggestions for reducing this burden, should be sent to the Chief Information Officer, U.S. Patent and Trademark Office, U.S. Department of Commerce, P.O. Box 1450, Alexandria, VA 22313-1450. DO NOT SEND FEES OR COMPLETED FORMS TO THIS ADDRESS. **This form can only be used when in conjunction with EFS-Web. If this form is mailed to the USPTO, it may cause delays in reinstating the patent.**

Privacy Act Statement

The Privacy Act of 1974 (P.L. 93-579) requires that you be given certain information in connection with your submission of the attached form related to a patent application or patent. Accordingly, pursuant to the requirements of the Act, please be advised that: (1) the general authority for the collection of this information is 35 U.S.C. 2(b)(2); (2) furnishing of the information solicited is voluntary; and (3) the principal purpose for which the information is used by the U.S. Patent and Trademark Office is to process and/or examine your submission related to a patent application or patent. If you do not furnish the requested information, the U.S. Patent and Trademark Office may not be able to process and/or examine your submission, which may result in termination of proceedings or abandonment of the application or expiration of the patent.

The information provided by you in this form will be subject to the following routine uses:

1. The information on this form will be treated confidentially to the extent allowed under the Freedom of Information Act (5 U.S.C. 552) and the Privacy Act (5 U.S.C. 552a). Records from this system of records may be disclosed to the Department of Justice to determine whether the Freedom of Information Act requires disclosure of these records.

2. A record from this system of records may be disclosed, as a routine use, in the course of presenting evidence to a court, magistrate, or administrative tribunal, including disclosures to opposing counsel in the course of settlement negotiations.

3. A record in this system of records may be disclosed, as a routine use, to a Member of Congress submitting a request involving an individual, to whom the record pertains, when the individual has requested assistance from the Member with respect to the subject matter of the record.

4. A record in this system of records may be disclosed, as a routine use, to a contractor of the Agency having need for the information in order to perform a contract. Recipients of information shall be required to comply with the requirements of the Privacy Act of 1974, as amended, pursuant to 5 U.S.C. 552a(m).

5. A record related to an International Application filed under the Patent Cooperation Treaty in this system of records may be disclosed, as a routine use, to the International Bureau of the World Intellectual Property Organization, pursuant to the Patent Cooperation Treaty.

6. A record in this system of records may be disclosed, as a routine use, to another federal agency for purposes of National Security review (35 U.S.C. 181) and for review pursuant to the Atomic Energy Act (42 U.S.C. 218(c)).

7. A record from this system of records may be disclosed, as a routine use, to the Administrator, General Services, or his/her designee, during an inspection of records conducted by GSA as part of that agency's responsibility to recommend improvements in records management practices and programs, under authority of 44 U.S.C. 2904 and 2906. Such disclosure shall be made in accordance with the GSA regulations governing inspection of records for this purpose, and any other relevant (i.e., GSA or Commerce) directive. Such disclosure shall not be used to make determinations about individuals.

8. A record from this system of records may be disclosed, as a routine use, to the public after either publication of the application pursuant to 35 U.S.C. 122(b) or issuance of a patent pursuant to 35 U.S.C. 151. Further, a record may be disclosed, subject to the limitations of 37 CFR 1.14, as a routine use, to the public if the record was filed in an application which became abandoned or in which the proceedings were terminated and which application is referenced by either a published application, an application open to public inspections or an issued patent.

9. A record from this system of records may be disclosed, as a routine use, to a Federal, State, or local law enforcement agency, if the USPTO becomes aware of a violation or potential violation of law or regulation.

UNITED STATES PATENT AND TRADEMARK OFFICE

Commissioner for Patents
United States Patent and Trademark Office
P.O. Box 1450
Alexandria, VA 22313-1450
www.uspto.gov

In re Patent No. 6955215
Issue Date: October 18,2005
Application No. 10795420
Filed: March 9,2004
Attorney Docket No. 3055/14

:
:DECISION GRANTING PETITION
:UNDER 37 CFR 1.378(c)
:

This is a decision on the electronic petition, filed February 23,2010 ,under 37 CFR 1.378(c) to accept the unintentionally delayed payment of the 3.5 year maintenance fee for the above-identified patent.

The petition is **GRANTED**.

The maintenance fee is accepted, and the above-identified patent reinstated as of February 23,2010 . This decision also constitutes notice that the fee has been accepted. An electronic copy of the petition and this decision has been created as an entry in the Image File Wrapper. Nevertheless, petitioner should print and retain an independent copy.

Telephone inquiries related to this electronic decision should be directed to the Electronic Business Center at 1-866-217-9197.

UNITED STATES PATENT AND TRADEMARK OFFICE

Commissioner for Patents
United States Patent and Trademark Office
P.O. Box 1450
Alexandria, VA 22313-1450
www.uspto.gov

Jagitiani + Guttag
10363 – A Democracy Lane
Fairfax, VA 22030

COPY MAILED

MAR 1 0 2009

OFFICE OF PETITIONS

In re Application of	:	
Bryan Yunker et al.	:	
Application No. 10/795,423	:	DECISION ON PETITION
Filed: March 9, 2004	:	TO WITHDRAW
Attorney Docket No. PICO-0032-DV1	:	FROM RECORD
	:	

This is a decision on the Request to Withdraw as attorney or agent of record under 37 C.F.R. § 1.36(b), filed November 17, 2008.

The request is **APPROVED**.

A grantable request to withdraw as attorney/agent of record must be signed by every attorney/agent seeking to withdraw or contain a clear indication that one attorney is signing on behalf of another/others. A request to withdraw will not be approved unless at least 30 (thirty) days would remain between the date of approval and the later of the expiration date of a time to file a response or the expiration date of the maximum time period which can be extended under 37 C.F.R. § 1.136(a).

The request was signed by Steven B. Kebler. Steven B. Kelber has been withdrawn. All other attorneys/agents will remain of record. The correspondence address will not be changed until further notified by the applicant.

Telephone inquiries concerning this decision should be directed to Kimberly Inabinet at 571-272-4618.

Kimberly Inabinet
Petitions Examiner
Office of Petitions

UNITED STATES PATENT AND TRADEMARK OFFICE

Commissioner for Patents
United States Patent and Trademark Office
P.O. Box 1450
Alexandria, VA 22313-1450
www.uspto.gov

MAIL

AUG 1 2 2005

DIRECTOR OFFICE
TECHNOLOGY CENTER 2100

REED SMITH LLP
3110 Fairview Park Drive
Suite 1400
Falls Church, Virginia 22042

In re Application of: KUWABARA et al.
Application No. 10/795,435
Filed: March 9, 2004
For: STORAGE CONTROL APPARATUS, STORAGE SYSTEM, AND CONTROL METHOD FOR STORAGE SYSTEM

DECISION ON PETITION FOR ACCELERATED EXAMINATION UNDER M.P.E.P.§708.02(VIII)

This is a response to the petition filed July 01, 2005 under 37 C.F.R. 102(d) and M.P.E.P. § 708.02(VIII): Accelerated Examination, to make the above-identified application special.

The Petition is **GRANTED**.

M.P.E.P. § 708.02, Section VIII which sets out the prerequisites for a grantable petition for Accelerated Examination under 37 C.F.R. § 102(d) states in relevant part:

A new application (one which has not received any examination by the examiner) may be granted special status provided that applicant (and this term includes applicant's attorney or agent) complies with each of the following items:

(a) Submits a petition to make special accompanied by the fee set forth in 37 CFR 1.17(h);

(b) Presents all claims directed to a single invention, or if the Office determines that all the claims presented are not obviously directed to a single invention, will make an election without traverse as a prerequisite to the grant of special status;

(c) Submits a statement(s) that a pre-examination search was made, listing the field of search by class and subclass, publication, Chemical Abstracts, foreign patents, etc. The pre-examination search must be directed to the invention as claimed in the application for which special status is requested. A search made by a foreign patent office satisfies this requirement;

(d) Submits one copy each of the references deemed most closely related to the subject matter encompassed by the claims if said references are not already of record; and

(e) Submits a detailed discussion of the references, which discussion points out, with the particularity required by 37 CFR 1.111 (b) and (c), how the claimed subject matter is patentable over the references.

Petition to Make Special **GRANTED** since all of the requirements for special status under MPEP § 708.02(VIII) have been met.

The application file is being forwarded to the Examiner for accelerated examination in accordance with the procedures set forth in M.P.E.P. §708.02, Section VIII. If the application is subsequently allowed, it will be given priority for printing. See M.P.E.P. §1309.

Brian L. Johnson
Special Program Examiner
Technology Center 2100
Computer Architecture, Software and Information Security
571-272-3595

AWK

UNITED STATES PATENT AND TRADEMARK OFFICE

Commissioner for Patents
United States Patent and Trademark Office
P.O. Box 1450
Alexandria, VA 22313-1450
www.uspto.gov

Melanie McCollum
Oliff & Berridge
P.O. Box 19928
Alexandria, VA 22320

COPY MAILED
OCT 1 0 2006
OFFICE OF PETITIONS

In re Application of	:	
Isao Saito et al.	:	
Application No. 10/795,436	:	DECISION ON PETITION
Filed: March 9, 2003	:	TO WITHDRAW
Attorney Docket No. 114588.01	:	FROM RECORD
	:	

This is a decision on the Request to Withdraw as attorney or agent under 37 C.F.R. § 1.36(b) or 37 C.F.R. § 10.40 filed July 11, 2006.

The request is **APPROVED**.

A review of the file record indicates that Melanie McCollum: (1) does not have power of attorney in this patent application; and (2) has been employed or otherwise engaged in the proceedings in this patent application. In view of the present decision, Melanie McCollum has/have been withdrawn from the present application and may not prepare or submit papers under 37 C.F.R. § 1.34, or correspond in any manner in this application unless appointed in an acceptable power of attorney under 37 C.F.R. § 1.32(b).

The address of record remains unchanged.

The attorneys and/or agents associated with the firm Oliff & Berridge remain the practitioners of record.

There is an outstanding Office action mailed September 7, 2006 that requires a reply from the attorneys and/or agents of record.

Telephone inquires concerning this decision should be directed to Terri Williams at 571-272-2991.

David Bucci
Petitions Examiner
Office of Petitions

UNITED STATES PATENT AND TRADEMARK OFFICE

Commissioner for Patents
United States Patent and Trademark Office
P.O. Box 1450
Alexandria, VA 22313-1450
www.uspto.gov

PATRICK DOODY
HUNTON AND WILLIAMS
1751 PINNALLE DR STE 1700
MCLEAN, VA 22102

COPY MAILED

JUN 16 2006

OFFICE OF PETITIONS

In re Application of	:	
Marcelo S. Copat et al	:	
Application No. 10/795,440	:	DECISION ON PETITION
Filed: March 9, 2004	:	TO WITHDRAW
Attorney Docket No. 44904.000548	:	FROM RECORD
	:	

This is a decision on the Request to Withdraw as attorney or agent of record under 37 C.F.R. § 1.36(b), filed November 14, 2005.

The request is **NOT APPROVED** as moot.

A review of the file record indicates that the power of attorney to Patrick Doody has been revoked by the assignee of the patent application. Accordingly, the request to withdraw under 37 C.F.R. § 1.36(b) is moot.

All future communications from the Office will continue to be directed to the below-listed address until otherwise notified by applicant.

Telephone inquires concerning this decision should be directed to Irvin Dingle at 571-272- 3210.

David Bucci
Petitions Examiner
Office of Petitions

cc: Joseph A. Tessari
Tredegar Film Products
1100 Boulders Parkway
Richmond, VA 23225

UNITED STATES PATENT AND TRADEMARK OFFICE

Commissioner for Patents
United States Patent and Trademark Office
P.O. Box 1450
Alexandria, VA 22313-1450
www.uspto.gov

ARENT FOX PLLC
1050 CONNECTICUT AVENUE, N.W.
SUITE 400
WASHINGTON DC 20036

COPY MAILED

JUN 19 2007

OFFICE OF PETITIONS

ON PETITION

In re Application of :
Shingo Masuko et al :
Application No. 10/795,444 :
Filed: March 9, 2004 :
Attorney Docket No. 025720-00024 :

This is a decision on the petition, filed June 15, 2007, under 37 CFR 1.313(c)(2) to withdraw the above-identified application from issue after payment of the issue fee.

The petition is **GRANTED.**

The above-identified application is withdrawn from issue for consideration of a submission under 37 CFR 1.114 (request for continued examination). See 37 CFR 1.313(c)(2).

Petitioner is advised that the issue fee paid on May 14, 2007 in the above-identified application cannot be refunded. If, however, the above-identified application is again allowed, petitioner may request that it be applied towards the issue fee required by the new Notice of Allowance.[1]

Telephone inquiries should be directed to the undersigned at (571) 272-3208.

The examiner of Technology Center AU 2834 will consider the request for continued examination under 37 CFR 1.114.

Karen Creasy

Karen Creasy
Petitions Examiner
Office of Petitions

---

[1] The request to apply the issue fee to the new Notice may be satisfied by completing and returning the new Issue Fee Transmittal Form PTOL-85(b), which includes the following language thereon: "Commissioner for Patents is requested to apply the Issue Fee and Publication Fee (if any) or re-apply any previously paid issue fee to the application identified above." Petitioner is advised that, whether a fee is indicated as being due or not, the Issue Fee Transmittal Form **must** be completed and timely submitted to avoid abandonment. Note the language in bold text on the first page of the Notice of Allowance and Fee(s) Due (PTOL-85).

UNITED STATES PATENT AND TRADEMARK OFFICE

Commissioner for Patents
United States Patent and Trademark Office
P.O. Box 1450
Alexandria, VA 22313-1450
www.uspto.gov

FISH & RICHARDSON PC
P.O. BOX 1022
MINNEAPOLIS, MN 55440-1022

COPY MAILED
JAN 21 2009

In re Application of Toru Takayama, et al. Application No. 10/795,445 Filed: March 9, 2004 Attorney Docket No. 12732-216001 / US7026	DECISION GRANTING PETITION UNDER 37 CFR 1.313(c)(2)

This is a decision on the petition under 37 CFR 1.313(c)(2), filed January 15, 2009, to withdraw the above-identified application from issue after payment of the issue fee.

The petition is **GRANTED**.

The above-identified application is withdrawn from issue for consideration of a submission under 37 CFR 1.114 (request for continued examination). *See* 37 CFR 1.313(c)(2).

Petitioner is advised that the issue fee paid on January 2, 2009 cannot be refunded. If, however, this application is again allowed, petitioner may request that it be applied towards the issue fee required by the new Notice of Allowance.[1]

Telephone inquiries regarding this decision should be directed to undersigned at (571) 272-1642.

This application is being referred to Technology Center AU 2894 for processing of the request for continued examination under 37 CFR 1.114 and for consideration of the concurrently filed information disclosure statement.

/AMW/
April M. Wise
Petitions Examiner
Office of Petitions

---

[1] *The request to apply the issue fee to the new Notice may be satisfied by completing and returning the new Part B – Fee(s) Transmittal Form (along with any balance due at the time of submission). Petitioner is advised that the Issue Fee Transmittal Form must be completed and timely submitted to avoid abandonment of the application.*

UNITED STATES PATENT AND TRADEMARK OFFICE

COMMISSIONER FOR PATENTS
UNITED STATES PATENT AND TRADEMARK OFFICE
P.O. BOX 1450
ALEXANDRIA, VA 22313-1450
www.uspto.gov

SIDLEY AUSTIN LLP
ATTN: DC PATENT DOCKETING
1501 K STREET, N.W.
WASHINGTON DC 20005

COPY MAILED

MAY 0 2 2007

OFFICE OF PETITIONS

Applicant: Eaton et al.
Appl. No.: 10/795,482
Filing Date: March 9, 2004
Title: INTERLEUKIN-8 HOMOLOGOUS POLYPEPTIDES AND THERAPEUTIC USES THEREOF
Attorney Docket No.: 22338-503
Pub. No.: US 2006/0019307 A1
Pub. Date: January 26, 2006

This is a decision on the request for a corrected patent application publication under 37 CFR 1.221(b), received on March 14, 2006, for the above-identified application

The request is DISMISSED.

Applicant requests that the application be republished because the patent application publication contains a material error in the specification as Table 1 contained on pages 29-45 of the specification is omitted on the publication.

37 CFR 1.221 (b) is applicable "only when the Office makes a material mistake which is apparent from Office records.... Any request for a corrected publication or revised patent application publication other than provided as provided in paragraph (a) of this section must be filed within two months from the date of the patent application publication. This period is not extendable." A material mistake must affect the public's ability to appreciate the technical disclosure of the patent application publication, to determine the scope of the patent application publication, or to determine the scope of the provisional rights that an applicant may seek to enforce upon issuance of a patent. [1]

The error noted by requestor wherein the phrase Table 1 is omitted from the publication may be an Office error, but it is not a material Office error under 37 CFR 1.221. The error noted by requestor with respect to the omission in this published application is due to the quality of the text in the application. The quality of the text is poor, as it is very small, blurry and not clearly legible, which makes it difficult to electronically reproduce by digital imaging and optical character recognition. See 37 CFR 1.52.

---

[1] Changes to Implement Eighteen-Month Publication of Patent Applications, 65 FR 57023, 57038 (Sept. 20, 2000), 1239, Off. Gaz. Pat. Office Notices 63, 75 (Oct. 10, 2000) (final rule).

Applicant is advised that he may want to file application papers that are clearer, as the error is due to the quality of the text. The text in the application is small and not clear, which makes it difficult to read and to electronically reproduce by digital imaging and optical character recognition. Applicants have been advised to file applications having cleaner and larger text with sufficient clarity and contrast to permit reproduction, such as electronic reproduction by digital imaging and optical character recognition, which will avoid errors in the patent application publication process. See 37 CFR 1.52.

The applicant is advised that a "request for republication of an application previously published" may be filed under 37 CFR 1.221 (a). Such a request for republication "must include a copy of the application compliance with the Office's electronic filing system requirements and be accompanied by the publication fee set forth in § 1.18 (d) and the processing fee set forth in § 1.17 (i)." If the request for republication does not comply with the electronic filing system requirements, the republication will not take place and the publication fee set forth in § 1.18 (d) will be refunded. The processing fee will be retained.

Any request for republication under 37 CFR 1.221(a), must be submitted via the EFS system and questions or request for reconsideration of the decision, should be addressed as follows:

By mail to: Mail Stop PGPUB
Commissioner for Patents
P.O. Box 1450
Alexandria, Va. 22313-1450

By facsimile: 571-273-8300

Inquiries relating to this matter may be directed to Mark Polutta at (571) 272-7709 (voice).

Mark Polutta
Senior Legal Advisor
Office of Patent Legal Administration
Office of the Deputy Commissioner
for Patent Examination Policy

UNITED STATES PATENT AND TRADEMARK OFFICE

Commissioner for Patents
United States Patent and Trademark Office
P.O. Box 1450
Alexandria, VA 22313-1450
www.uspto.gov

COPY MAILED

SEP 01 2006

OFFICE OF PETITIONS

SEAN R MACDONALD
1616 DICKINSON STREET
INVERNESS FL 34450

In re Application of	:	
Sean R. Macdonald	:	
Application No. 10/795,490	:	ON PETITION
Filed: March 8, 2004	:	
Attorney Docket No. MD128/01	:	

This is a decision on the petition to revive an abandoned application under 37 CFR 1.137(b), filed February 21, 2006.

The petition under 37 CFR 1.137(b) is **GRANTED**.

The above-identified application became abandoned for failure to timely file a response to the non-final Office action mailed February 25, 2005, which set a shortened statutory period for reply of three (3) months. No extensions of time under 37 CFR 1.136(a) were purchased. Accordingly, no reply having received, the application became abandoned on May 26, 2005. A Notice of Abandonment was mailed on October 3, 2005.

With the instant petition, petitioner paid the petition fee, submitted the required reply in the form of an Amendment, and made the proper statement of unintentional delay.

The matter is being forwarded to Group Art Unit 3611 for consideration of the Amendment filed February 21, 2006.

Telephone inquiries related to this decision should be directed to the undersigned at (571)272-3207.

Cliff Congo
Petitions Attorney
Office of Petitions

UNITED STATES PATENT AND TRADEMARK OFFICE

COMMISSIONER FOR PATENTS
UNITED STATES PATENT AND TRADEMARK OFFICE
P.O. BOX 1450
ALEXANDRIA, VA 22313-1450
www.uspto.gov

SIDLEY AUSTIN LLP
ATTN: DC PATENT DOCKETING
1501 K STREET, NW
WASHINGTON DC 20005

COPY MAILED

OCT 12 2007

OFFICE OF PETITIONS

Applicant: Eaton et al.
Appl. No.: 10/795,503
Filing Date: March 9, 2004
Title: INTERLEUKIN-8 HOMOLOGOUS POLYPEPTIDES AND THERAPEUTIC USES THEREOF
Attorney Docket No.: 22338-502
Pub. No.: 2006/0210991 A1
Pub. Date: September 21, 2006

This is a decision on the request for corrected of patent application publication under 37 CFR 1.221(b), received on November 14, 2006, for the above-identified application.

The request is DISMISSED.

Applicant requests that the application be republished because the patent application publication contains a material error, as Table 1 found on pages 29-45 of the application as has been omitted from the publication.

37 CFR 1.221 (b) is applicable "only when the Office makes a material mistake which is apparent from Office records.... Any request for a corrected publication or revised patent application publication other than provided as provided in paragraph (a) of this section must be filed within **two months** from the date of the patent application publication. This period is not extendable." A material mistake must affect the public's ability to appreciate the technical disclosure of the patent application publication, to determine the scope of the patent application publication, or to determine the scope of the provisional rights that an applicant may seek to enforce upon issuance of a patent. [1]

The error in the publication with respect to the omitted table may be an Office mistake, but it is not a material mistake as required by 37 CFR 1.221(b). The error in the omitted table in the publication is not a material mistake because the application is a Division of U.S. Application 10/015,967 filed December 7, 2001, now U.S. Patent Application Publication 2003/0065154 A1. Furthermore, the error may due to the font size, as it is very small, which makes it difficult to electronically reproduce by digital imaging and optical character recognition. Additionally, the table appears to be a computer program listing and computer program listings are not required to

[1] Changes to Implement Eighteen-Month Publication of Patent Applications, 65 FR 57023, 57038 (Sept. 20, 2000), 1239, Off. Gaz. Pat. Office Notices 63, 75 (Oct. 10, 2000) (final rule).

be published in pre-grant publications. See MPEP 1121. Since, the parent application, which is also incorporated by reference is published and contains the information printed correctly, the error does not affect the public's ability to appreciate the technical disclosure of the patent application publication, to determine the scope of the patent application publication or to determine the scope of the provisional rights that an applicant may seek to enforce upon issuance of a patent. The error also does not affect the use of the patent application publication as a prior art reference, because the continuity data is correctly published and the earlier publication has the best date as a reference. Furthermore, this is not a material error since the Image File Wrapper (IFW) for this application is available to the public, as of its publication date.

Applicant is advised that he may want to file application papers that are clearer, as the error may be due to the quality of the text, as the text is very small. The text in the application is very small, which makes it difficult to read and to electronically reproduce by digital imaging and optical character recognition. Applicants have been advised to file applications having cleaner and larger text with sufficient clarity and contrast to permit reproduction, such as electronic reproduction by digital imaging and optical character recognition, which will avoid errors in the patent application publication process. See 37 CFR 1.52.

The applicant is advised that a "request for republication of an application previously published" may be filed under 37 CFR 1.221(a). Such a request for republication "must include a copy of the application compliance with the Office's electronic filing system requirements and be accompanied by the publication fee set forth in § 1.18(d) and the processing fee set forth in § 1.17(i)." If the request for republication does not comply with the electronic filing system requirements, the republication will not take place and the publication fee set forth in § 1.18(d) will be refunded. The processing fee will be retained.

Any request for republication under 37 CFR 1.221(a), must be submitted via the EFS system, as a "Pre-Grant Publication" and questions or request for reconsideration of the decision, should be addressed as follows:

By mail to: Mail Stop PGPUB
Commissioner for Patents
P.O. Box 1450
Alexandria, Va. 22313-1450

By facsimile: 571-273-8300

Inquiries relating to this matter may be directed to Mark Polutta at (571) 272-7709.

Mark O. Polutta
Senior Legal Advisor
Office of Patent Legal Administration
Office of the Deputy Commissioner
for Patent Examination Policy

UNITED STATES PATENT AND TRADEMARK OFFICE

Commissioner for Patents
United States Patent and Trademark Office
P.O. Box 1450
Alexandria, VA 22313-1450
www.uspto.gov

DEC 10 2007

OFFICE OF THE STAFF JUDGE ADVOCATE
U.S. ARMY MEDICAL RESEARCH AND MATERIEL COMMAND
ATTN: MCMR-JA (MS. ELIZABETH ARWINE)
504 SCOTT STREET
FORT DETRICK MD 21702-5012

In re Application of	:
Kai P. Leung al	:
Serial No.: 10/795.514	: PETITION DECISION
Filed: March 9, 2004	:
Attorney Docket No.: WRAIR 03-23 18	:

This is a decision on the PETITION FOR ACCEPTANCE OF COLOR DRAWINGS UNDER 37 CFR 1.84(a)(2). The petition was filed March 14, 2007. Entry of color drawings requires: 1) three sets of the color drawings, 2) a proper amendment to the specification indicating color photographs or drawings are present in the file, and 3) the required fee under 37 CFR 1.17(h).

A review of the application record indicates that the petition meets all of the requirements for acceptance of color drawings. This is not to be construed that all of the drawings are accepted, only that the color drawings are acceptable.

The petition is **GRANTED**.

Should there be any questions with respect to this decision, please contact William R. Dixon, Jr., by mail addressed to: Director, Technology Center 1600, at the address listed above, or by telephone at 571-272-0519 or by facsimile transmission at 571-273-8300.

William R. Dixon, Jr.
Special Program Examiner
Technology Center 1600

UNITED STATES PATENT AND TRADEMARK OFFICE

Commissioner for Patents
United States Patent and Trademark Office
P.O. Box 1450
Alexandria, VA 22313-1450
www.uspto.gov

INTELLECTUAL PROPERTY / TECHNOLOGY LAW
PO BOX 14329
RESEARCH TRIANGLE PARK, NC 27709

COPY MAILED

JUN 2 2 2005

OFFICE OF PETITIONS

In re Application of :
Ing-Shin Chen, et al. :
Application No. 10/795,529 : ON PETITION
Filed: March 8, 2004 :
Attorney Docket No. ATMI-707 :

This is a decision on the petition under 37 CFR 1.137(b), filed March 7, 2005, to revive the above-identified application.

The petition is **GRANTED**.

The application became abandoned for failure to timely respond to a Notice to File Corrected Application Papers mailed May 24, 2004, requiring replacement drawings in compliance with 37 CFR 1.84 and 37 CFR 1.121. A Notice of Abandonment was mailed February 14, 2005. In response, on March 7, 2005, the present petition was filed, along with replacement drawings.

The petition is found to comply with the requirements of 37 CFR 1.137(b). Since this application was filed after June 8, 1995, no terminal disclaimer, or fee therefor, is required. Accordingly, the $130 submitted with the present petition is refunded.

The application is being referred to the Office of Initial Patent Examination (OIPE) for review of the drawings provided March 7, 2005.

Telephone inquires related to this decision should be directed to the undersigned at (571) 272-3204. Telephone inquiries related to OIPE processing should be directed to their hotline at (703) 308-1202.

Sherry D. Brinkley
Petitions Examiner
Office of Petitions
Office of the Deputy Commissioner
for Patent Examination Policy

UNITED STATES PATENT AND TRADEMARK OFFICE

Commissioner for Patents
United States Patent and Trademark Office
P.O. Box 1450
Alexandria, VA 22313-1450
www.uspto.gov

MORGAN, LEWIS & BOCKIUS LLP (SF)
2 PALO ALTO SQUARE
3000 El Camino Real, Suite 700
PALO ALTO CA 94306

COPY MAILED

MAY 03 2007

OFFICE OF PETITIONS

In re Application of	:	
SHI, Wenyuan et al.	:	
Application No. 10/795,554	:	DECISION ON PETITION
Filed: March 04, 2004	:	TO WITHDRAW
Attorney Docket No. **061818-5515 US**	:	FROM RECORD
	:	

This is a decision on the Request to Withdraw as attorney or agent of record under 37 C.F.R. § 1.36(b), filed February 02, 2007.

The request is **NOT APPROVED** as moot.

A review of the file record indicates that the power of attorney to MORGAN, LEWIS & BOCKIUS LLP (SF) has been revoked by the assignee of the patent application on February 28, 2007. Accordingly, the request to withdraw under 37 C.F.R. § 1.36(b) is moot.

All future communications from the Office will continue to be directed to the below-listed address until otherwise notified by applicant.

Telephone inquires concerning this decision should be directed to Tredelle Jackson at 571-272-2783.

Monica A. Graves
Petitions Examiner
Office of Petitions

cc: **PERKINS COIE LLP**
POST OFFICE BOX 1208
SEATTLE, WA 98111-1208

UNITED STATES PATENT AND TRADEMARK OFFICE

Commissioner for Patents
United States Patent and Trademark Office
P.O. Box 1450
Alexandria, VA 22313-1450
www.uspto.gov

JUL 17 2006

LATHROP & GAGE LC
2345 GRAND AVENUE
SUITE 2800
KANSAS CITY MO 64108

In re Application of: JERRY HULSE Serial No.: 10/795,564 Filed: March 8, 2004 Docket: 413960 Title: OBSTETRICAL VACUUM EXTRACTOR CUP WITH SOFT MOLDED LIP	DECISION ON PETITION TO WITHDRAW FINALITY AS PREMATURE

This is a decision on the petition filed on October 31, 2005 to withdraw the finality of the Office Action of August 29, 2005.

The petition is **DISMISSED as moot**.

In his October 31, 2005 petition, the applicant requested a withdrawal of the finality of the Office action on August 29, 2005. In support of his petition, the applicant argues that his June 22, 2005 amendment did not necessitate a final rejection.

The record shows that:

1) On March 8, 2004, the applicant filed the original claims.
2) On March 22, 2005, the examiner made a first rejection against claims 1-8, 14, 16 and 21-23 citing both 35 U.S.C. § 102 and § 103.
3) On June 22, 2005, the applicant filed amended claims.
4) On August 29, 2005, the examiner made a final rejection to claims 1-8, 14, 16 and 21-23 citing 35 U.S.C. § 103 and Double Patenting.
5) The applicant filed the current petition on October 31, 2005, alleging that the examiner erred in making the August 29, 2005 Office Action final in view of the newly cited art, new rejections, and improper double patenting rejections.
6) On December 29, 2005, the examiner issued a new final rejection which withdrew the finality of the August 29, 2005 since the double patenting rejection was not necessitated by the previous amendment.

In view of the history, the relief the applicant requested, namely the withdrawal of the finality of the August 29, 2005 Office Action, has already occurred. Moreover, it should be noted that the applicant acknowledged the withdrawal of finality in the applicant's March 23, 2006 response to

the examiner's December 29, 2005 Office Action by stating "Applicants note with appreciation the furtherance of prosecution in the instant office action, in view of the premature final rejection made previously in the office action. . ." Accordingly, the petition is dismissed as moot.

Any inquiry regarding this decision should be directed to Henry Yuen, Special Program Examiner, at (571) 272-4856.

Frederick R. Schmidt, Director
Technology Center 3700

UNITED STATES PATENT AND TRADEMARK OFFICE

Commissioner for Patents
United States Patent and Trademark Office
P.O. Box 1450
Alexandria, VA 22313-1450
www.uspto.gov

FISH & RICHARDSON PC
P O BOX 1022
MINNEAPOLIS, MN 55440-1022

COPY MAILED

DEC 15 2006

OFFICE OF PETITIONS

In re Application of	:
Peter J. De Groot et al	:
Application No. 10/795,579	: DECISION GRANTING PETITION
Filed: March 8, 2004	: UNDER 37 CFR 1.313(c)(2)
Attorney Docket No. 09712-340001	:

This is a decision on the petition, filed December 11, 2006, under 37 CFR 1.313(c)(2) to withdraw the above-identified application from issue after payment of the issue fee.

The petition is **GRANTED**.

The above-identified application is withdrawn from issue for consideration of a submission under 37 CFR 1.114 (request for continued examination). See 37 CFR 1.313(c)(2).

Petitioner is advised that the issue fee paid on October 4, 2006 in the above-identified application cannot be refunded. If, however, the above-identified application is again allowed, petitioner may request that it be applied towards the issue fee required by the new Notice of Allowance.[1]

Telephone inquiries should be directed to the undersigned at (571) 272-3218.

This matter is being referred to Technology Center AU 2877 for processing of the request for continued examination under 37 CFR 1.114 and for consideration of the Information Disclosure Statement.

Frances Hicks
Petitions Examiner
Office of Petitions

C:\Documents and Settings\FHicks\My Documents\470\Dec10\795579.wpd

---

[1] *The request to apply the issue fee to the new Notice may be satisfied by completing and returning the new Part B – Fee(s) Transmittal Form (along with any balance due at the time of submission). Petitioner is advised that the Issue Fee Transmittal Form must be completed and timely submitted to avoid abandonment.*

UNITED STATES PATENT AND TRADEMARK OFFICE

COMMISSIONER FOR PATENTS
UNITED STATES PATENT AND TRADEMARK OFFICE
P.O. BOX 1450
ALEXANDRIA, VA 22313-1450
www.uspto.gov

FISH & RICHARDSON PC
P.O. BOX 1022
MINNEAPOLIS MN 55440-1022

COPY MAILED

OCT 01 2009

OFFICE OF PETITIONS

In re Application of	:	
Mario Stevenson	:	
Patent Number: 7,507,527	:	
Issue Date: 03/24/2009	:	
Application No. 10/795580	:	
Filing or 371(c) Date: 03/08/2004	:	ON APPLICATION FOR
Attorney Docket Number:	:	PATENT TERM ADJUSTMENT
07917-089003 / UMMC 99-25	:	

This is in response to the ON APPLICATION FOR PATENT TERM ADJUSTMENT UNDER 37 C.F.R. § 1.705(d), filed May 15, 2009. Patentees request reconsideration of the final patent term adjustment to increase the total patent term adjustment to 592 days, not 313 days as indicated on the patent. Patentees request this correction solely on the basis that the Office took in excess of three years to issue this patent. Patentees also submit, in good faith and candor, that Applicant delay should be 265 days rather than 263 days.

The request for reconsideration patent term adjustment is **GRANTED to the extent indicated herein**.

On March 24, 2009, the above-identified application matured into U.S. Patent No. 7,507,527, with a patent term adjustment of 313 days. This application for patent term adjustment was timely filed within two months of the issue date of the patent. See 37 CFR 1.705(d).

Patentees request recalculation of the patent term adjustment as interpreted by the ruling in Wyeth v. Dudas, 580 F. Supp. 2d 138, 88 U.S.P.Q. 2d 1538 (D.D.C. 2008). Patentees assert that pursuant to Wyeth, Patentees are entitled to the sum of the delays under 35 USC 154(b)(1)(a) and 35 USC (b)(1)(B), to the extent that they do not overlap by occurring on the same day. Accordingly, Patentees assert that the correct patent term adjustment for this patent is 592 days based on 576 days of adjustment pursuant to 37 CFR 1.702(a) *plus* 281 days pursuant to 37 CFR 1.702(b) *less* zero overlapping days *less* 265 days pursuant to 37 CFR 1.704.

The 281-day period is calculated based on the application having been filed under 35 U.S.C. 111(a) on March 8, 2004, and a request for continued examination having been filed on December 14, 2007, three (3) years and 281 days later. Patentees assert that in addition to this 281-day period, they are entitled to a period of adjustment due to examination delay pursuant to

37 CFR 1.702(a) totalling 576 days. This 576-day period is the result of a period of delay of 576 days for the failure by the Office to mail at least one of a notification under 35 U.S.C. 132 not later than fourteen months after the date on which application was filed under 35 U.S.C. 111(a), pursuant to 37 CFR 1.702(a)(1).

Patentees acknowledge the reductions of 92 days, 22 days, and 61 days.

As to the reduction of 88 days, Patentees correctly assert that the period of reduction in this regard is actually 90 days. In accordance with 37 CFR 1.704(b), the reduction commenced August 29, 2004, the day after the date that is three months after the date that the Notice of Incomplete was mailed, and ended November 26, 2004, the date that a response thereto was filed. Office records have been corrected accordingly to reflect an overall applicant delay of 265 days. The Office thanks Patentees for their good faith and candor in bringing this to our attention.

Regarding Patentees request for recalculation of the patent term adjustment in view of Wyeth, under 37 CFR 1.703(f), patentees are entitled to a period of patent term adjustment equal to the period of delays based on the grounds set forth in 37 CFR 1.702 reduced by the period of time equal to the period of time during which patentees failed to engage in reasonable efforts to conclude prosecution pursuant to 37 CFR 1.704. In other words, patentees are entitled to the period of Office delay reduced by the period of applicant delay.

The Office agrees that as of the filing of the RCE on December 14, 2007, the application was pending three years and 281 days after its filing date. The Office agrees that certain action was not taken within the specified time frame, and thus, the entry of a period of adjustment of 576 days is correct. At issue is whether patentees should accrue 281 days of patent term adjustment for the Office taking in excess of three years to issue the patent, as well as 576 days for Office failure to take a certain action within a specified time frame (or examination delay).

The Office contends that the period of 281 days of delay in issuing the patent overlap with the 576 days of examination delay under 37 CFR 1.702(a). Patentees' calculation of the period of overlap is inconsistent with the Office's interpretation of this provision. 35 U.S.C. 154(b)(2)(A) limits the adjustment of patent term, as follows:

> To the extent that the periods of delay attributable to grounds specified in paragraph (1) overlap, the period of any adjustment granted under this subsection shall not exceed the actual number of days the issuance of the patent was delayed.

Likewise, 35 CFR 1.703(f) provides that:

> To the extent that periods of delay attributable to the grounds specified in § 1.702 overlap, the period of adjustment granted under this section shall not exceed the actual number of days the issuance of the patent was delayed.

As explained in *Explanation of 37 CFR 1.703(f) and of the United States Patent and Trademark Office Interpretation of 35 U.S.C. 154(b)(2)(A)*, 69 Fed. Reg. 34283 (June 21, 2004), the Office interprets 35 U.S.C. 154(b)(2)(A) as permitting either patent term adjustment under 35 U.S.C. 154(b)(1)(A)(i)-(iv), or patent term adjustment under 35 U.S.C. 154(b)(1)(B), but not as permitting patent term adjustment under both 35 U.S.C. 154(b)(1)(A)(i)-(iv) and 154(b)(1)(B). Accordingly, the Office implements the overlap provision as follows:

> If an application is entitled to an adjustment under 35 U.S.C. 154(b)(1)(B), the entire period during which the application was pending (except for periods excluded under 35 U.S.C. 154(b)(1)(B)(i)-(iii)), and not just the period beginning three years after the actual filing date of the application, is the period of delay under 35 U.S.C. 154(b)(1)(B) in determining whether periods of delay overlap under 35 U.S.C. 154(b)(2)(A). Thus, any days of delay for Office issuance of the patent more than 3 years after the filing date of the application, which overlap with the days of patent term adjustment accorded prior to the issuance of the patent will not result in any additional patent term adjustment. See 35 U.S.C. 154(b)(1)(B), 35 U.S.C. 154(b)(2)(A), and 37 CFR § 1.703(f). See *Changes to Implement Patent Term Adjustment Under Twenty Year Term; Final Rule*, 65 Fed. Reg. 56366 (Sept. 18, 2000). See also *Revision of Patent Term Extension and Patent Term Adjustment Provisions; Final Rule*, 69 Fed. Reg. 21704 (April 22, 2004), 1282 Off. Gaz. Pat. Office 100 (May 18, 2004). See also *Explanation of 37 CFR 1.703(f) and of the United States Patent and Trademark Office Interpretation of 35 U.S.C. 154(b)(2)(A),* 69 Fed. Reg. 34283 (June 21, 2004).

The current wording of § 1.703(f) was revised in response to the misinterpretation of this provision by a number of Patentees. The rule was slightly revised to more closely track the corresponding language of 35 U.S.C. 154(b)(2)(A). The relevant portion differs only to the extent that the statute refers back to provisions of the statute whereas the rule refers back to sections of the rule. This was not a substantive change to the rule nor did it reflect a change of the Office's interpretation of 35 U.S.C. 154(b)(2)(A). As stated in the *Explanation of 37 CFR 1.703(f) and of the United States Patent and Trademark Office Interpretation of 35 U.S.C. 154(b)(2)(A)*, the Office has consistently taken the position that if an application is entitled to an adjustment under the three-year pendency provision of 35 U.S.C. 154(b)(1)(B), the entire period during which the application was pending before the Office (except for periods excluded under 35 U.S.C. 154(b)(1)(B)(i)-(iii)), and not just the period beginning three years after the actual filing date of the application, is the relevant period under 35 U.S.C. 154(b)(1)(B) in determining whether periods of delay "overlap" under 35 U.S.C. 154(b)(2)(A).

This interpretation is consistent with the statute. Taken together the statute and rule provide that to the extent that periods of delay attributable to grounds specified in 35 U.S.C. 154(b)(1) and in corresponding § 1.702 overlap, the period of adjustment granted shall not exceed the actual number of days the issuance of the patent was delayed. The grounds specified in these sections cover the A) guarantee of prompt Patent and Trademark Office responses, B) guarantee of no more than 3-year application pendency, and C) guarantee or adjustments for delays due to

interference, secrecy orders and appeals. A section by section analysis of 35 U.S.C. 154(b)(2)(A) specifically provides that:

> Section 4402 imposes limitations on restoration of term. In general, pursuant to [35 U.S.C.] 154(b)(2)(A)-(C), total adjustments granted for restorations under [35 U.S.C. 154](b)(1) are reduced as follows: (1) To the extent that there are multiple grounds for extending the term of a patent that may exist simultaneously (e.g., delay due to a secrecy order under [35 U.S.C.] 181 and administrative delay under [35 U.S.C.] 154(b)(1)(A)), the term should not be extended for each ground of delay but only for the actual number of days that the issuance of a patent was delayed; See 145 Cong. Rec. S14,718[1]

As such, the period for over three-year pendency does not overlap only to the extent that the actual dates in the period beginning three years after the date on which the application was filed overlap with the actual dates in the periods for failure of the Office to take action within specified time frames. In other words, consideration of the overlap does not begin three years after the filing date of the application.

In this instance, the relevant period under 35 U.S.C. 154(b)(1)(B) in determining whether periods of delay "overlap" under 35 U.S.C. 154(b)(2)(A) is the entire period during which the application was pending before the Office, March 8, 2004, to the date that the RCE was filed, December 14, 2007. Prior to the issuance of the patent, 576 days of patent term adjustment were accorded for the Office failing to respond within a specified time frame during the pendency of the application. All of the 281 days for Office delay in issuing the patent overlap with the 576 days of Office examination delay. During that time, the issuance of the patent was delayed by 576 days, not 281 days + 576 days. The Office took 14 months and 576 days to issue a first Office action. Otherwise, the Office took all actions set forth in 37 CFR 1.702(a) within the prescribed timeframes. Nonetheless, given the initial 576 days of Office delay and the time allowed within the time frames for processing and examination, the application issued three years and 281 days after its filing date. The Office did not delay 281 days and then an additional 576 days. Accordingly, 576 days of patent term adjustment due to examination delay was entered because the period of delay of 576 days attributable to grounds specified in § 1.702(a) overlaps with the adjustment of 281 days attributable to the delay in the issuance of the patent. Entry of both periods is not warranted.

In view thereof, this application file is being directed to the Certificates of Correction Branch for issuance of a certificate of correction to reflect that the term of the above-identified patent is extended or adjusted by **THREE HUNDRED ELEVEN (311) DAYS (576 days of Office delay *less* 265 days of applicant delay)**.

---

[1] The AIPA is title IV of the Intellectual Property and Communications Omnibus Reform Act of 1999 (S. 1948), which was incorporated and enacted as law as part of Pub. L. 106-113. The Conference Report for H.R. 3194, 106th Cong. 1st Sess. (1999), which resulted in Pub. L. 106-113, does not contain any discussion (other than the incorporated language) of S. 1948. A section-by-section analysis of S. 1948, however, was printed in the Congressional Record at the request of Senator Lott, See 145 Cong. Rec. S14,708-26 (1999)(daily ed. Nov. 17, 1999).

Any request for reconsideration of this decision must be submitted within ONE MONTH of the mail date indicated herein. The time period for seeking reconsideration is not subject to extension under 37 CFR 1.136.

The Office acknowledges submission of the $200.00 fee set forth in 37 CFR 1.18(e). No additional fees are required.

Telephone inquiries specific to this matter should be directed to Attorney Derek Woods, at (571) 272-3232.

Alesia Brown
Senior Petitions Attorney
Office of Petitions
Office of the Deputy Commissioner
for Patent Examination Policy

Enclosure: Copy of DRAFT Certificate of Correction

UNITED STATES PATENT AND TRADEMARK OFFICE

CERTIFICATE OF CORRECTION

PATENT : 7,507,527 B2

DATED : March 24, 2009

INVENTOR(S) : Stevenson

It is certified that error appears in the above-identified patent and that said Letters Patent is hereby corrected as shown below:

On the cover page,

[*] Notice: Subject to any disclaimer, the term of this patent is extended or adjusted under 35 USC 154(b) by 313 days.

Delete the phrase "by 313 days" and insert – by 311 days--

UNITED STATES PATENT AND TRADEMARK OFFICE

Commissioner for Patents
United States Patent and Trademark Office
P.O. Box 1450
Alexandria, VA 22313-1450
www.uspto.gov

Paper No.

RALPH E. JOCKE
231 SOUTH BROADWAY
MEDINA, OH 44256

COPY MAILED

JUL 21 2004

OFFICE OF PETITIONS

In re Application of :
Natarajan Ramachandran :
Application No. 10/795,587 :
Filed: March 8, 2004 : ON PETITION
Attorney Docket Number: :
D-1107 R2 CIP2 :

This is a decision on the Petition to Establish Prior Receipt in the U.S. Patent and Trademark Office of Items Considered as Omitted by the U.S. Patent and Trademark Office, filed June 21, 2004, requesting the application be accorded a filing date of March 8, 2004, including drawing Figures 21 - 24 described in the specification.

The petition is **granted**.

The application was filed on March 8, 2004. However, on May 25, 2004, the Office of Initial Patent Examination mailed a Notice of Omitted Items in a Nonprovisional Application (hereinafter "Notice"), noting that a filing date had been accorded the application; however, drawing figures 21 - 24 described in the specification appeared to have been omitted from the application.

In response, Applicant files the instant petition wherein Applicant avers that drawing figures 21 - 24 described in the specification were originally filed with the application on March 8, 2004, and were received by this Office as evidenced by the return-receipt postcard. In support, Petitioner provides a copy of a return receipt postcard acknowledging receipt of, *inter alia*, 24 sheets of drawings on March 8, 2004.

A review of the return receipt postcard reveals that Petitioner is correct. The postcard acknowledges receipt of twenty-four (24) sheets of drawings on March 8, 2004. Petitioner has also re-submitted drawing figures 21 - 24 with the instant petition.

Evidence of receipt of any correspondence filed in the Patent and Trademark Office can be obtained by submitting a self-addressed postcard properly itemizing and identifying the paper or papers being filed. Upon receipt of the correspondence, the Patent and Trademark Office will check the listing on the post card against the papers submitted, making sure that all items listed are present and will then stamp the postcard with an Official date stamp and place the postcard in the outgoing mail. "A postcard receipt which itemizes and properly identifies the papers which are being filed serves as *prima facie* evidence of receipt in the PTO of all items listed thereon by the PTO." MPEP § 503.

The copy of drawing figures 21 - 24 supplied on June 21, 2004, will be used for examination purposes.

A refund of the petition fee has been credited to deposit account 09-0428 as authorized in the instant petition.

The application will be returned to the Office of Initial Patent Examination for further processing as a nonprovisional application with a filing date of March 8, 2004, and an indication that drawing figures 21 - 24 were among 24 sheets of drawings present on filing, using drawing figures 21 - 24 filed on June 21, 2004.

Telephone inquiries concerning this matter should be directed to the undersigned at (703) 305-0014.

Derek L. Woods
Petitions Attorney
Office of Petitions

UNITED STATES PATENT AND TRADEMARK OFFICE

UNITED STATES DEPARTMENT OF COMMERCE
United States Patent and Trademark Office
Address: COMMISSIONER FOR PATENTS
P.O. Box 1450
Alexandria, Virginia 22313-1450
www.uspto.gov

RALPH E. JOCKE
Walker & Jocke
231 SOUTH BROADWAY
MEDINA, OH 44256

Mail Date: 04/21/2010

Applicant	: Natarajan Ramachandran	: DECISION ON REQUEST FOR
Patent Number	: 7634448	: RECALCULATION of PATENT
Issue Date	: 12/15/2009	: TERM ADJUSTMENT IN VIEW
Appliction No	: 10/795,587	: OF WYETH AND NOTICE OF INTENT TO
Filed	: 03/08/2004	: ISSUE CERTIFICATE OF CORRECTION
		:

The Request for Recalculation is **GRANTED** to the extent indicated.

The patent term adjustment has been determined to be **1682** days. The USPTO will *sua sponte* issue a certificate of correction reflecting the amount of PTA days determined by the recalculation.

Prior to the issuance of the certificate of correction, the USPTO will afford patentee an opportunity to be heard and request reconsideration. Accordingly, patentee has **one month or thirty (30) days**, whichever is longer, to file a request for reconsideration of this patent term adjustment calculation. See 35 U.S.C. 154(b)(3)(B)(ii) and 37 CFR 1.322(a)(4). No extensions of time will be granted under 37 CFR 1.136.

Patentee should use document code PET.OP if electronically filing a request for reconsideration of this patent term adjustment calculation. The patentee must also include the information required by 37 CFR 1.705(b)(2) and the fee required by 37 CFR 1.18(e). If patentee does not file a timely request for reconsideration of this patent term adjustment calculation including the information required by 37 CFR 1.705(b)(2) and the fee required by 37 CFR 1.18(e), the USPTO will issue a certificate of correction reflecting the PTA determination noted above.

Patentee should be aware that in order to preserve the right to review in the United States District Court for the District of Columbia of the USPTO patent term adjustment determination, patentee must ensure that he or she also take the steps required under 35 U.S.C. 154(b)(4)(A) in a timely manner. Nothing in the request for recalculation should be construed as providing an alternative time frame for commencing a civil action under 35 U.S.C. 154(b)(4)(A).

Any questions concerning this decision should be directed to the Office of Patent Legal Administration at 571-272-7702.

OIPE JUN 25 2004 PATENT & TRADEMARK OFFICE

RECEIVED
FEB 03 2003
SEED INTELLECTUAL PROPERTY
LAW GROUP PLLC

Rx1

COPY

UNITED STATES PATENT AND TRADEMARK OFFICE

COMMISSIONER FOR PATENTS
UNITED STATES PATENT AND TRADEMARK OFFICE
WASHINGTON, D.C. 20231
www.uspto.gov

Paper No. 6

SEED INTELLECTUAL PROPERTY LAW GROUP PLLC
701 FIFTH AVE.
SUITE 6300
SEATTLE, WA 98104-7092

COPY MAILED

JAN 30 2003

OFFICE OF PETITIONS

In re Application of	:	
Villa, et al.	:	
Application No. 10/128,989	:	DECISION GRANTING STATUS
Filed: April 22, 2002	:	UNDER 37 CFR 1.47(a)
Attorney Docket No.: 854063.633C1	:	
For: INTEGRATED DEVICE BASED UPON SEMICONDUCTOR TECHNOLOGY, IN PARTICULAR CHEMICAL MICROREACTOR	:	

This is in response to the petition under 37 CFR 1.47(a), filed November 21, 2002.

The petition is **GRANTED**.

Petitioner has shown that inventor Manlio Torchia has refused to join in the filing of the above-identified application after having been presented with the application papers.

The above-identified application and papers have been reviewed and found in compliance with 37 CFR 1.47(a). This application is hereby accorded Rule 1.47(a) status.

As provided in Rule 1.47(c), this Office will forward notice of this application's filing to the non-signing inventor at the address given in the petition. Notice of the filing of this application will also be published in the Official Gazette.

After this decision is mailed, the above-identified application will be returned to the Office of Initial Patent Examination for further processing.

Telephone inquiries regarding this decision should be directed to the undersigned at (703) 305-0310.

Alesia M. Brown
Petitions Attorney
Office of Petitions
Office of the Deputy Commissioner
for Patent Examination Policy

UNITED STATES PATENT AND TRADEMARK OFFICE

Commissioner for Patents
United States Patent and Trademark Office
P.O. Box 1450
Alexandria, VA 22313-1450
www.uspto.gov

AMIN, TUROCY & CALVIN, LLP
127 Public Square
57th Floor, Key Tower
CLEVELAND, OH 44114

COPY MAILED

NOV 13 2008

OFFICE OF PETITIONS

In re Application of
Kavira Singh, et. al.
Application No. 10/795,591
Filed: March 8, 2004
Attorney Docket No. MS126578.2/MSFTP238 USA

ON PETITION

This is a decision on the petition under 37 CFR 1.137(b), filed October 22, 2007, to revive the above-identified application.

The application became abandoned for failure to respond to the Notice of Non-Compliant Amendment (37 CFR 1.121) mailed June 13, 2007. A Notice of Abandonment was mailed on October 15, 2007.

37 CFR 1.137(b)(3) requires a statement that the entire delay in filing the required reply from the due date for the reply until the filing of a grantable petition pursuant to 37 CFR 1.137(b) was unintentional. Since the statement contained in the instant petition varies from the language required by 37 CFR 1.137(b)(3), the statement is being construed as the statement required by 37 CFR 1.137(b)(3) and petitioner must notify the Office if this is **not** a correct interpretation of the statement.

As authorized, the petition fee of $1,540 has been charged to petitioner's deposit account.

The petition satisfies the requirements of 37 CFR 1.137(b) in that petitioner has supplied (1) the reply in the form of an amendment; (2) the petition fee of $1,540; and (3) an adequate statement of unintentional delay. Therefore, the petition is **GRANTED**.

The file does not indicate a change of address has been submitted, although the address given on the petition differs from the address of record. If appropriate, a change of address should be filed in accordance with MPEP 601.03. A courtesy copy of this decision is being mailed to the address given on the petition; however, the Office will mail all future correspondence solely to the address of record.

This application file is being referred to Technology Center Art Unit 2195 for review of the amendment filed with the instant petition.

Telephone inquiries concerning this decision should be directed to the undersigned at (571) 272-3226.

Andrea Smith
Petitions Examiner
Office of Petitions

cc: Amin, Turocy & Calvin, LLP
24th Floor, National City Center
1900 E. 9th Street
Cleveland, OH 44114

UNITED STATES PATENT AND TRADEMARK OFFICE

Commissioner for Patents
United States Patent and Trademark Office
P.O. Box 1450
Alexandria, VA 22313-1450
www.uspto.gov

Paper No.

MAILED

SEP 14 2009

OFFICE OF PETITIONS

WORKMAN NYDEGGER/MICROSOFT
1000 EAGLE GATE TOWER
60 EAST SOUTH TEMPLE
SALT LAKE CITY UT 84111

In re Application of	:	
Singh et al.	:	
Application No. 10/795,591	:	DECISION ON PETITION
Filed: March 8, 2004	:	PURSUANT TO
Attorney Docket No.:	:	37 C.F.R. § 1.137(B)
13768.1244	:	
Title: WORKFLOW AS DATA-	:	
TRANSITION DRIVEN,	:	
SCRIPTABLE STATE MACHINES	:	

This is a decision on the petition pursuant to 37 C.F.R. § 1.137(b), filed July 27, 2009, to revive the above-identified application.

This petition pursuant to 37 C.F.R. § 1.137(b) is **GRANTED**.

The above-identified application became abandoned for failure to submit the issue and publication fees in a timely manner in reply to the Notice of Allowance and Issue Fee Due, mailed February 26, 2009, which set a shortened statutory period for reply of three months. No extensions of time are permitted for transmitting issue[1] or publication fees.[2] Accordingly, the above-identified application became abandoned on May 27, 2009. A Notice of Abandonment was mailed on June 24, 2009.

A grantable petition pursuant to 37 C.F.R. § 1.137(b) must be accompanied by:

(1) The reply required to the outstanding Office action or notice, unless previously filed;

1 See MPEP § 710.02(e)(III).
2 See 37 C.F.R. § 1.211(e).

(2) The petition fee as set forth in 37 C.F.R. § 1.17(m);
(3) A statement that the entire delay in filing the required reply from the due date for the reply until the filing of a grantable petition pursuant to this paragraph was unintentional. The Commissioner may require additional information where there is a question whether the delay was unintentional, and;
(4) Any terminal disclaimer (and fee as set forth in 37 C.F.R. § 1.20(d)) required pursuant to paragraph (d) of this section.

37 C.F.R. § 1.137(b)(3) requires a statement that the entire delay in filing the required reply from the due date for the reply until the filing of a grantable petition pursuant to 37 C.F.R. § 1.137(b) was unintentional. Since the statement contained in this petition varies from the language required by 37 C.F.R. § 1.137(b)(3), the statement contained in this petition is being construed as the statement required by 37 C.F.R. § 1.137(b)(3) and Petitioner must notify the Office if this is not a correct interpretation of the statement contained in this petition.

With this petition, Petitioner has submitted the petition, publication, and issue fees, along with a statement that is being construed as the proper statement of unintentional delay. As such, the first three requirements of Rule 1.137(b) have been met. The fourth requirement of Rule 1.137(b) is not applicable, as a terminal disclaimer is not required.[3]

It is not apparent whether the person signing the statement of unintentional delay was in a position to have firsthand or direct knowledge of the facts and circumstances of the delay at issue. Nevertheless, such statement is being treated as having been made as the result of a reasonable inquiry into the facts and circumstances of such delay.[4] In the event that such an inquiry has not been made, Petitioner must make such an inquiry. If such inquiry results in the discovery that the delay was intentional, Petitioner must notify the Office.

---

3 See Rule 1.137(d).
4 See 37 C.F.R. § 10.18(b); cf. Changes to Patent Practice and Procedure; Final Rule Notice, 62 Fed. Reg. 53131, 53178 (October 10, 1997), 1203 Off. Gaz. Pat. Office 63, 103 (October 21, 1997).

Pursuant to this decision, the Office of Patent Publication will be notified of this decision so that the present application can be processed into a patent.

Petitioner may find it beneficial to view Private PAIR within a fortnight of the present decision to ensure that the revival has been acknowledged by the Office of Patent Publication in response to this decision. It is noted that all inquiries with regard to any failure of that change in status should be directed to the Office of Patent Publication where that change of status must be effected - **the Office of Petitions cannot effectuate a change of status.**

Telephone inquiries regarding *this decision* should be directed to the undersigned at (571) 272-3225.[5] All other inquiries concerning the status of the application should be directed to the Office of Patent Publication at 571-272-4200.

Paul Shanoski
Senior Attorney
Office of Petitions

5 Petitioner will note that all practice before the Office should be in writing, and the action of the Office will be based exclusively on the written record in the Office. See 37 C.F.R. § 1.2. As such, Petitioner is reminded that no telephone discussion may be controlling or considered authority for any further action(s) of Petitioner.

UNITED STATES PATENT AND TRADEMARK OFFICE

Commissioner for Patents
United States Patent and Trademark Office
P.O. Box 1450
Alexandria, VA 22313-1450
www.uspto.gov

HUSCH BLACKWELL SANDERS LLP
WELSH & KATZ
FLOOR 22
120 SOUTH RIVERSIDE PLAZA
CHICAGO, IL 60606-3912

MAILED

MAY 10 2010

OFFICE OF PETITIONS

In re Patent No. 7,335,002
Issue Date: February 26, 2008
Application No. 10/795,610
Filed: March 8, 2004
Attorney Docket No. 4446-103039-CON

: DECISION GRANTING PETITION
: UNDER 37 CFR 1.78(a)(3) AND
: REQUEST FOR CERTIFICATE OF
: CORRECTION
:

This is a decision on the petition, filed August 12, 2009, which is being treated as a petition under 37 CFR 1.78(a)(3), seeking to add a claim for priority under 35 U.S.C. § 120 to nonprovisional Application No. 10/173,837, filed June 19, 2002, by way of a certificate of correction.

The petition is **GRANTED**.

A review of the file record fails to disclose that a claim for the benefit of priority to the above-noted, prior-filed nonprovisional application was made within the time period set forth in 37 CFR 1.78(a)(2)(ii) and further failed to include a proper reference to the prior-filed application as required by 37 CFR 1.78(a)(2)(i) and 1.78(a)(2)(iii).

The instant application was filed March 8, 2004. Therefore, since this application was filed after November 29, 2000, a petition under 37 CFR 1.78(a)(3), along with submission of a Certificate of Correction, is the appropriate avenue of relief to accept a late claim for the benefit of priority to a prior-filed nonprovisional application after issuance of the application into a patent. *See* MPEP 1481.

A petition for acceptance of a claim for late priority under 37 CFR 1.78(a)(3) must be accompanied by:

(1) the reference required by 35 U.S.C. § 120 and 37 CFR 1.78(a)(2)(i) of the prior-filed application, unless previously submitted;
(2) the surcharge set forth in § 1.17(t); and
(3) a statement that the entire delay between the date the claim was due under 37 CFR 1.78(a)(2)(ii) and the date the claim was filed was unintentional. The Director may require additional information where there is a question whether the delay was unintentional.

As the petition for acceptance of an unintentionally delayed claim for the benefit of priority under 35 U.S.C. § 120 to the above-noted, prior-filed nonprovisional application satisfies the conditions of 37 CFR 1.78(a)(3), the petition is granted.

A corrected Filing Receipt, which includes the priority claim to the above-noted, prior-filed nonprovisional application, accompanies this decision on petition.

Petitioner is advised that the granting of this petition and the mailing of a corrected Filing Receipt should not be viewed as an indication that a determination has been made that this application is entitled to claim benefit of the prior-filed application. A determination that applicant is entitled to claim benefit of the prior-filed application will be made by the Examiner prior to the mailing of a certificate of correction.

The $100 Certificate of Correction fee will be charged to petitioner's deposit account as authorized.

Any inquiries concerning this decision may be directed to Alicia Kelley at (571) 272-6059.

This application is being referred to the Certificates of Correction Branch for processing the request for a certificate of correction in accordance with this decision on the petition under 37 CFR 1.78(a)(3).

/Liana Walsh/
Liana Walsh
Petition Examiner
Office of Petitions

ATTACHMENT: Corrected Filing Receipt

UNITED STATES PATENT AND TRADEMARK OFFICE

UNITED STATES DEPARTMENT OF COMMERCE
United States Patent and Trademark Office
Address: COMMISSIONER FOR PATENTS
P.O. Box 1450
Alexandria, Virginia 22313-1450
www.uspto.gov

APPLICATION NUMBER	FILING or 371(c) DATE	GRP ART UNIT	FIL FEE REC'D	ATTY.DOCKET.NO	TOT CLAIMS	IND CLAIMS
10/795,610	03/08/2004	3746	1070	4446-103039-CON	2	2

CONFIRMATION NO. 1328

CORRECTED FILING RECEIPT

Husch Blackwell Sanders LLP
Welsh & Katz
Floor 22
120 South Riverside Plaza
Chicago, IL 60606-3912

OC000000041545373

Date Mailed: 05/12/2010

Receipt is acknowledged of this non-provisional patent application. The application will be taken up for examination in due course. Applicant will be notified as to the results of the examination. Any correspondence concerning the application must include the following identification information: the U.S. APPLICATION NUMBER, FILING DATE, NAME OF APPLICANT, and TITLE OF INVENTION. Fees transmitted by check or draft are subject to collection. Please verify the accuracy of the data presented on this receipt. **If an error is noted on this Filing Receipt, please submit a written request for a Filing Receipt Correction. Please provide a copy of this Filing Receipt with the changes noted thereon. If you received a "Notice to File Missing Parts" for this application, please submit any corrections to this Filing Receipt with your reply to the Notice. When the USPTO processes the reply to the Notice, the USPTO will generate another Filing Receipt incorporating the requested corrections**

Applicant(s)

Berton L. Vicars, Odessa, TX;

Power of Attorney:
James Conte--54661

Domestic Priority data as claimed by applicant

This application is a CON of 10/173,837 06/19/2002 PAT 7,341,435

Foreign Applications

If Required, Foreign Filing License Granted: 05/24/2004

The country code and number of your priority application, to be used for filing abroad under the Paris Convention, is **US 10/795,610**

Projected Publication Date: Not Applicable

Non-Publication Request: No

Early Publication Request: No

Title

FLUID END

Preliminary Class

417

PROTECTING YOUR INVENTION OUTSIDE THE UNITED STATES

Since the rights granted by a U.S. patent extend only throughout the territory of the United States and have no effect in a foreign country, an inventor who wishes patent protection in another country must apply for a patent in a specific country or in regional patent offices. Applicants may wish to consider the filing of an international application under the Patent Cooperation Treaty (PCT). An international (PCT) application generally has the same effect as a regular national patent application in each PCT-member country. The PCT process **simplifies** the filing of patent applications on the same invention in member countries, but **does not result** in a grant of "an international patent" and does not eliminate the need of applicants to file additional documents and fees in countries where patent protection is desired.

Almost every country has its own patent law, and a person desiring a patent in a particular country must make an application for patent in that country in accordance with its particular laws. Since the laws of many countries differ in various respects from the patent law of the United States, applicants are advised to seek guidance from specific foreign countries to ensure that patent rights are not lost prematurely.

Applicants also are advised that in the case of inventions made in the United States, the Director of the USPTO must issue a license before applicants can apply for a patent in a foreign country. The filing of a U.S. patent application serves as a request for a foreign filing license. The application's filing receipt contains further information and guidance as to the status of applicant's license for foreign filing.

Applicants may wish to consult the USPTO booklet, "General Information Concerning Patents" (specifically, the section entitled "Treaties and Foreign Patents") for more information on timeframes and deadlines for filing foreign patent applications. The guide is available either by contacting the USPTO Contact Center at 800-786-9199, or it can be viewed on the USPTO website at http://www.uspto.gov/web/offices/pac/doc/general/index.html.

For information on preventing theft of your intellectual property (patents, trademarks and copyrights), you may wish to consult the U.S. Government website, http://www.stopfakes.gov. Part of a Department of Commerce initiative, this website includes self-help "toolkits" giving innovators guidance on how to protect intellectual property in specific countries such as China, Korea and Mexico. For questions regarding patent enforcement issues, applicants may call the U.S. Government hotline at 1-866-999-HALT (1-866-999-4158).

LICENSE FOR FOREIGN FILING UNDER

Title 35, United States Code, Section 184

Title 37, Code of Federal Regulations, 5.11 & 5.15

GRANTED

The applicant has been granted a license under 35 U.S.C. 184, if the phrase "IF REQUIRED, FOREIGN FILING LICENSE GRANTED" followed by a date appears on this form. Such licenses are issued in all applications where the conditions for issuance of a license have been met, regardless of whether or not a license may be required as

set forth in 37 CFR 5.15. The scope and limitations of this license are set forth in 37 CFR 5.15(a) unless an earlier license has been issued under 37 CFR 5.15(b). The license is subject to revocation upon written notification. The date indicated is the effective date of the license, unless an earlier license of similar scope has been granted under 37 CFR 5.13 or 5.14.

This license is to be retained by the licensee and may be used at any time on or after the effective date thereof unless it is revoked. This license is automatically transferred to any related applications(s) filed under 37 CFR 1.53(d). This license is not retroactive.

The grant of a license does not in any way lessen the responsibility of a licensee for the security of the subject matter as imposed by any Government contract or the provisions of existing laws relating to espionage and the national security or the export of technical data. Licensees should apprise themselves of current regulations especially with respect to certain countries, of other agencies, particularly the Office of Defense Trade Controls, Department of State (with respect to Arms, Munitions and Implements of War (22 CFR 121-128)); the Bureau of Industry and Security, Department of Commerce (15 CFR parts 730-774); the Office of Foreign AssetsControl, Department of Treasury (31 CFR Parts 500+) and the Department of Energy.

NOT GRANTED

No license under 35 U.S.C. 184 has been granted at this time, if the phrase "IF REQUIRED, FOREIGN FILING LICENSE GRANTED" DOES NOT appear on this form. Applicant may still petition for a license under 37 CFR 5.12, if a license is desired before the expiration of 6 months from the filing date of the application. If 6 months has lapsed from the filing date of this application and the licensee has not received any indication of a secrecy order under 35 U.S.C. 181, the licensee may foreign file the application pursuant to 37 CFR 5.15(b).

UNITED STATES PATENT AND TRADEMARK OFFICE

Commissioner for Patents
United States Patent and Trademark Office
P.O. Box 1450
Alexandria, VA 22313-1450
www.uspto.gov

NAVTEQ NORTH AMERICA, LLC
222 MERCHANDISE MART
SUITE 900, PATENT DEPT.
CHICAGO IL 60654

COPY MAILED
SEP 25 2006
OFFICE OF PETITIONS

In re Application of	:	
Dorum et al.	:	
Application No. 10/795,635	:	ON PETITION
Filed: March 8, 2004	:	
Attorney Docket No. N0191US	:	

This is a decision on the petition under 37 CFR 1.181, filed October 14, 2005, requesting the withdrawal of the holding of abandonment in the above-identified application and has been so treated.

The petition to withdraw the holding of abandonment is **GRANTED.**

The above-identified application was held abandoned for failure to timely reply to the non-final Office action mailed August 27, 2004, which set a shortened statutory period for reply of three (3) months. A reply was due on or before November 27, 2004. A Notice of Abandonment was mailed on September 30, 2005.

Petitioner states that the reply was in fact timely filed. To support this assertion, petitioner has submitted a copy of the Certificate of Transmission under 37 CFR 1.8, which identifies submission on January 24, 2005 of 1. Response; 2. Declaration under 37 CFR 1.132; and 3. Petition for Extension of Time. Additionally, petitioner has supplied a copy of the previously mailed correspondence, which bears a certificate of mailing date of January 24, 2005.

In view of the above, the holding of abandonment is hereby withdrawn and the application restored to pending status.

A petition to withdraw the holding of abandonment under the provisions of 37 CFR 1.181 does not require a fee. The $1500.00 petition fee submitted with the instant petition will be credited to petitioner's deposit account, with a reduction of $450.00 for 2-month extension of time fee.

This matter is being referred to Technology Center AU 2162 for further examination on the merits.

Telephone inquiries concerning this decision should be directed to the undersigned at (571) 272-3206.

Liana Chase
Petitions Examiner
Office of Petitions

UNITED STATES PATENT AND TRADEMARK OFFICE

Commissioner for Patents
United States Patent and Trademark Office
P.O. Box 1450
Alexandria, VA 22313-1450
www.uspto.gov

NIKOLAI & MERSEREAU, P.A.
900 SECOND AVENUE SOUTH
SUITE 820
MINNEAPOLIS, MN 55402

COPY MAILED

JAN 2 1 2005

OFFICE OF PETITIONS

In re Application of :
Legatt, et al. :
Application No.10/795,657 :
Filed: March 8, 2004 :
Attorney Docket No. 1436/140 :

DECISION GRANTING PETITION

This is a decision on petition filed September 7, 2004, requesting that the above-identified application retain the presently accorded a filing date of March 8, 2004, with Figures 2-5 as described in the specification as part of the original disclosure.

On March 8, 2004, the above-identified application was filed. On August 13, 2004, the Office of Initial Patent Examination mailed a "Notice of Omitted Items in a Nonprovisional Application" (the "Notice"), stating that the application had been accorded a filing date of March 8, 2004, however, Figures 2-5 as described in the specification appeared to have been omitted. The Notice allowed a non-extendable two-month period for reply beginning from the mailing date of the Notice.

In response, on September 7, 2004, applicants filed the instant petition along with a copy of the Office date-stamped postcard acknowledging receipt of 2 sheets of drawings on March 8, 2004, and a copy of page 2 of the drawings that included Figures 2-5.

Upon review of the record, Figures 2-5 as described in the specification have not been located among the application papers. However, the evidence is convincing that the application papers deposited March 8, 2004, included Figures 2-5 which were subsequently misplaced by the Office. Therefore, the application, including Figures 2-5 as described in the specification, was complete on filing and entitled to the presently accorded filing date of March 8, 2004.

Accordingly, the petition is granted; the language in the Notice relative to the omitted figure is vacated, accordingly.

The application file is being returned to the Office of Initial Patent Examination for further processing with the presently accorded filing date of March 8, 2004, using the 2 sheets of drawings filed on that date.

Any inquiries related to this decision should be directed to the undersigned at (571) 272-3222.

Kenya A. McLaughlin

Kenya A. McLaughlin
Petitions Attorney
Office of Petitions

UNITED STATES PATENT AND TRADEMARK OFFICE

UNITED STATES DEPARTMENT OF COMMERCE
United States Patent and Trademark Office
Address: COMMISSIONER FOR PATENTS
P.O. Box 1450
Alexandria, Virginia 22313-1450
www.uspto.gov

APPL NO.	FILING OR 371 (c) DATE	ART UNIT	FIL FEE REC'D	ATTY.DOCKET NO	DRAWINGS	TOT CLMS	IND CLMS
10/795,657	03/08/2004	1744	770	14361/140	2	20	1

CONFIRMATION NO. 9840

CORRECTED FILING RECEIPT

OC000000016656349

23595
NIKOLAI & MERSEREAU, P.A.
900 SECOND AVENUE SOUTH
SUITE 820
MINNEAPOLIS, MN 55402

Date Mailed: 07/29/2005

Receipt is acknowledged of this regular Patent Application. It will be considered in its order and you will be notified as to the results of the examination. Be sure to provide the U.S. APPLICATION NUMBER, FILING DATE, NAME OF APPLICANT, and TITLE OF INVENTION when inquiring about this application. Fees transmitted by check or draft are subject to collection. Please verify the accuracy of the data presented on this receipt. **If an error is noted on this Filing Receipt, please mail to the Commissioner for Patents P.O. Box 1450 Alexandria Va 22313-1450. Please provide a copy of this Filing Receipt with the changes noted thereon. If you received a "Notice to File Missing Parts" for this application, please submit any corrections to this Filing Receipt with your reply to the Notice. When the USPTO processes the reply to the Notice, the USPTO will generate another Filing Receipt incorporating the requested corrections (if appropriate).**

Applicant(s)

Donald Joseph Legatt, St. Michael, MN;
Nick Graupe, White Bear Lake, MN;
Charles A. Cazett, Hopkins, MN;

Power of Attorney: The patent practitioners associated with Customer Number **23595**.

Domestic Priority data as claimed by applicant

This appln claims benefit of 60/453,007 03/07/2003

Foreign Applications

If Required, Foreign Filing License Granted: 08/12/2004

The country code and number of your priority application, to be used for filing abroad under the Paris Convention, is US10/795,657

Projected Publication Date: Not Applicable

Non-Publication Request: No

Early Publication Request: No

BEST AVAILABLE COPY

Title

Squeegee assembly

Preliminary Class

015

PROTECTING YOUR INVENTION OUTSIDE THE UNITED STATES

Since the rights granted by a U.S. patent extend only throughout the territory of the United States and have no effect in a foreign country, an inventor who wishes patent protection in another country must apply for a patent in a specific country or in regional patent offices. Applicants may wish to consider the filing of an international application under the Patent Cooperation Treaty (PCT). An international (PCT) application generally has the same effect as a regular national patent application in each PCT-member country. The PCT process **simplifies** the filing of patent applications on the same invention in member countries, but **does not result** in a grant of "an international patent" and does not eliminate the need of applicants to file additional documents and fees in countries where patent protection is desired.

Almost every country has its own patent law, and a person desiring a patent in a particular country must make an application for patent in that country in accordance with its particular laws. Since the laws of many countries differ in various respects from the patent law of the United States, applicants are advised to seek guidance from specific foreign countries to ensure that patent rights are not lost prematurely.

Applicants also are advised that in the case of inventions made in the United States, the Director of the USPTO must issue a license before applicants can apply for a patent in a foreign country. The filing of a U.S. patent application serves as a request for a foreign filing license. The application's filing receipt contains further information and guidance as to the status of applicant's license for foreign filing.

Applicants may wish to consult the USPTO booklet, "General Information Concerning Patents" (specifically, the section entitled "Treaties and Foreign Patents") for more information on timeframes and deadlines for filing foreign patent applications. The guide is available either by contacting the USPTO Contact Center at 800-786-9199, or it can be viewed on the USPTO website at http://www.uspto.gov/web/offices/pac/doc/general/index.html.

LICENSE FOR FOREIGN FILING UNDER
Title 35, United States Code, Section 184
Title 37, Code of Federal Regulations, 5.11 & 5.15

GRANTED

The applicant has been granted a license under 35 U.S.C. 184, if the phrase "IF REQUIRED, FOREIGN FILING LICENSE GRANTED" followed by a date appears on this form. Such licenses are issued in all applications where the conditions for issuance of a license have been met, regardless of whether or not a license may be required as set forth in 37 CFR 5.15. The scope and limitations of this license are set forth in 37 CFR 5.15(a) unless an earlier license has been issued under 37 CFR 5.15(b). The license is subject to revocation upon written notification. The date indicated is the effective date of the license, unless an earlier license of similar scope has been granted under 37 CFR 5.13 or 5.14.

This license is to be retained by the licensee and may be used at any time on or after the effective date thereof unless it is revoked. This license is automatically transferred to any related applications(s) filed under 37 CFR 1.53(d). This license is not retroactive.

The grant of a license does not in any way lessen the responsibility of a licensee for the security of the subject matter as imposed by any Government contract or the provisions of existing laws relating to espionage and the

BEST AVAILABLE COPY

national security or the export of technical data. Licensees should apprise themselves of current regulations especially with respect to certain countries, of other agencies, particularly the Office of Defense Trade Controls, Department of State (with respect to Arms, Munitions and Implements of War (22 CFR 121-128)); the Office of Export Administration, Department of Commerce (15 CFR 370.10 (j)); the Office of Foreign Assets Control, Department of Treasury (31 CFR Parts 500+) and the Department of Energy.

NOT GRANTED

No license under 35 U.S.C. 184 has been granted at this time, if the phrase "IF REQUIRED, FOREIGN FILING LICENSE GRANTED" DOES NOT appear on this form. Applicant may still petition for a license under 37 CFR 5.12, if a license is desired before the expiration of 6 months from the filing date of the application. If 6 months has lapsed from the filing date of this application and the licensee has not received any indication of a secrecy order under 35 U.S.C. 181, the licensee may foreign file the application pursuant to 37 CFR 5.15(b).

BEST AVAILABLE COPY

UNITED STATES PATENT AND TRADEMARK OFFICE

COMMISSIONER FOR PATENTS
UNITED STATES PATENT AND TRADEMARK OFFICE
P.O. BOX 1450
ALEXANDRIA, VA 22313-1450
www.uspto.gov

NIKOLAI & MERSEREAU, P.A.
900 SECOND AVENUE SOUTH
SUITE 820
MINNEAPOLIS MN 55402

COPY MAILED
MAR 24 2006
OFFICE OF PETITIONS

Applicant: Legatt et al.
Appl. No.: 10/795,657
Filing Date: March 8, 2004
Title: SQUEEGEE ASSEMBLY
Attorney Docket No.: 14361-140
Pub. No.: US 2005/0115015 A1
Pub. Date: June 2, 2005

This is a decision on the request for a corrected patent application publication under 37 CFR 1.221(b), filed on July 29, 2005, for the above-identified application.

Applicant requests that the application be republished because the patent application publication contains material error, as the second sheet of drawings was omitted in the publication.

The request is granted.

The corrected patent application publication will be published in due course, unless the patent issues before the application is republished.

Inquiries relating to this matter may be directed to Mark O. Polutta at (571) 272-7709 (voice).

Mark O. Polutta
Office of Patent Legal Administration
Office of the Deputy Commissioner
for Patent Examination Policy

UNITED STATES PATENT AND TRADEMARK OFFICE

COMMISSIONER FOR PATENTS
UNITED STATES PATENT AND TRADEMARK OFFICE
P.O. BOX 1450
ALEXANDRIA, VA 22313-1450
www.uspto.gov

DAVIDSON, DAVIDSON & KAPPEL, LLC
485 SEVENTH AVENUE, 14TH FLOOR
NEW YORK NY 10018

COPY MAILED

NOV 23 2005

OFFICE OF PETITIONS

Applicant: Belanger et al.
Appl. No.: 10/795,683
Filing Date: March 8, 2004
Title: PRINTING BLANKET WITH CONVEX OUTER PRINT SURFACE
Attorney Docket No.: 6001.1305
Pub. No.: US 2005/0193908 A1
Pub. Date: September 8, 2005

This is a decision on the request for a corrected patent application publication under 37 CFR 1.221(b), received on November 3, 2005, for the above-identified application.

The request is granted.

The corrected patent application publication will be published in due course, unless the patent issues before the application is republished.

It would greatly benefit the Office if applicant did not provide a copy of the application as filed and a copy of the reference submitted in the Information Disclosure Statement (IDS) previously filed in the Office with the request for a corrected publication, as the Office already has a copy in the application file and it unnecessarily increases the cost to the Office. See 37 CFR 1.4(b). A request for corrected publication need only point out what was printed incorrectly in the application, where the error occurs in the publication and where the correct text is found in the application papers. Marked up relevant copies of the applications papers and the pre-grant publication may facilitate processing of the request. If it is not clear why the error is a material error, further explanation may be warranted.

Inquiries relating to this matter may be directed to Mark Polutta at (571) 272-7709 (voice).

Mark O. Polutta
Office of Patent Legal Administration
Office of the Deputy Commissioner
for Patent Examination Policy

UNITED STATES PATENT AND TRADEMARK OFFICE

COMMISSIONER FOR PATENTS
UNITED STATES PATENT AND TRADEMARK OFFICE
P.O. BOX 1450
ALEXANDRIA, VA 22313-1450
www.uspto.gov

DAVIDSON, DAVIDSON & KAPPEL, LLC
485 SEVENTH AVENUE, 14TH FLOOR
NEW YORK, NY 10018

COPY MAILED

JAN 0 9 2006

OFFICE OF PETITIONS

In re Application of	:	
Weiler et al.	:	
Application No. 10/795,683	:	
Filed: March 8, 2004	:	ON PETITION
Attorney Docket Number:	:	
600.1305	:	

This is a decision in response to the Petition to Change Order of Inventors Under 37 CFR 1.182, filed on August 5, 2005.

Applicant files the instant petition to change the order of the names of the inventors as follows:

1. Richard Karl Weiler
2. James Brian Vrotacoe
3. James Richard Belanger

The petition is **granted**.

This application is being forwarded to Technology Center 2854 via Application Branch Data Input to change the order of inventorship.

Telephone inquiries concerning this matter should be directed to the undersigned at (571) 272-3232.

Derek L. Woods
Attorney
Office of Petitions

UNITED STATES PATENT AND TRADEMARK OFFICE

Commissioner for Patents
United States Patent and Trademark Office
P.O. Box 1450
Alexandria, VA 22313-1450
www.uspto.gov

LAW OFFICE OF PHILIP A STEINER
1212 MARSH STREET
SUITE 3
SAN LUIS OBISPO, CA 93401

COPY MAILED

FEB 11 2008

OFFICE OF PETITIONS

In re Application of	:	
Arthur Howard Goldiner	:	
Application No. 10/795,691	:	DECISION ON PETITION
Filed: March 6, 2004	:	TO WITHDRAW
Attorney Docket No. UT03012004	:	FROM RECORD
	:	

This is a decision on the Request to Withdraw as attorney or agent of record under 37 C.F.R. § 1.36(b) filed August 6, 2007, September 10, 2007 and October 5, 2007.

The request is **DISMISSED** as moot.

A review of the file record indicates that the power of attorney to Law Office of Philip A. Steiner has been revoked by the applicant of the patent application on October 11, 2007. Accordingly, the request to withdraw under 37 C.F.R. § 1.36(b) is moot.

All future communications from the Office will continue to be directed to the below-listed address until otherwise notified by applicant.

Telephone inquires concerning this decision should be directed to undersigned at 571-272- 1642.

April M. Wise
Petitions Examiner
Office of Petitions

cc: MR. ARTHUR GOLDINER
431 LEONI DRIVE
GROVER BEACH, CA 93433-3041

UNITED STATES PATENT AND TRADEMARK OFFICE

UNITED STATES DEPARTMENT OF COMMERCE
United States Patent and Trademark Office
Address: COMMISSIONER FOR PATENTS
P.O. Box 1450
Alexandria, Virginia 22313-1450
www.uspto.gov

APPLICATION NUMBER	FILING OR 371(C) DATE	FIRST NAMED APPLICANT	ATTY. DOCKET NO./TITLE
10/795,691	03/06/2004	Arthur Howard Goldiner	UT03012004

CONFIRMATION NO. 1446

POWER OF ATTORNEY NOTICE

31105
LAW OFFICE OF PHILIP A STEINER
1212 MARSH STREET
SUITE 3
SAN LUIS OBISPO, CA 93401

OC000000028230819

Date Mailed: 02/11/2008

NOTICE REGARDING CHANGE OF POWER OF ATTORNEY

This is in response to the Power of Attorney filed 10/11/2007.

- The Power of Attorney to you in this application has been revoked by the applicant. Future correspondence will be mailed to the new address of record(37 CFR 1.33).

/amwise/

Office of Initial Patent Examination (571) 272-4000 or 1-800-PTO-9199

UNITED STATES PATENT AND TRADEMARK OFFICE

Commissioner for Patents
United States Patent and Trademark Office
P.O. Box 1450
Alexandria, VA 22313-1450
www.uspto.gov

MAILED
FROM DIRECTORS OFFICE

JAN 12 2006

TECHNOLOGY CENTER 3600

BOSE MCKINNERY & EVANS LLP
135 N PENNSYLVANIA ST
SUITE 2700
INDIANAPOLIS, IN 46204

In re Application of
Barry D. Hand et al.
Application No. 10/795,756
Filed: March 8, 2004
For: PRONING BED

DECISION ON PETITION TO WITHDRAW THE HOLDING OF ABANDONMENT

This is a decision on the Petition to Withdraw the Holding of Abandonment filed in the United States Patent and Trademark Office on August 24, 2005.

The petition is **GRANTED** in view of the following evidence of timely filing:

☐ Postcard receipt being dated_____.

☒ USPTO return facsimile receipt dated April 11, 2005.

☐ Certificate of Mailing/Transmission signed on _____, and supported by a statement under 37 C.F.R. 1.8(b)(3).

☐ Hand Delivery Receipt of the specific documents submitted, dated _____.

☐ Certificate of Transmission of CPA under 37 C.F.R. 1.6 filed on _____.

☐ Express Mail Receipt under 37 C.F.R. 1.10 dated _____.

☐ Originally sent response, filed _____.

This application is being forwarded to the Supervisory Legal Instruments Examiner for withdrawal of the abandonment and then to the examiner for prompt action.

RAR/bkg: October 18, 2005

KENNETH J. DORNER
SPECIAL PROGRAMS EXAMINER
TECHNOLOGY CENTER 3600

UNITED STATES PATENT AND TRADEMARK OFFICE

Commissioner for Patents
United States Patent and Trademark Office
P.O. Box 1450
Alexandria, VA 22313-1450
www.uspto.gov

PHILIP S. JOHNSON
JOHNSON & JOHNSON
ONE JOHNSON & JOHNSON PLAZA
NEW BRUNSWICK NJ 08933-7003

COPY MAILED

OCT 14 2005

OFFICE OF PETITIONS

In re Application of	:	
Danilo L. Lambino	:	
Application No. 10/795,764	:	ON PETITION
Filed: March 8, 2004	:	
Attorney Docket No. J&J-5111	:	

This is a decision on the petition, filed October 11, 2005, under 37 CFR 1.313(c)(2) to withdraw the above-identified application from issue after payment of the issue fee.

The petition is **GRANTED**.

The above-identified application is withdrawn from issue for consideration of a submission under 37 CFR 1.114 (request for continued examination). See 37 CFR 1.313(c)(2).

Petitioner is advised that the issue fee paid on September 9, 2005 in the above-identified application cannot be refunded. If, however, the above-identified application is again allowed, petitioner may request that it be applied towards the issue fee required by the new Notice of Allowance.[1]

Telephone inquiries should be directed to the undersigned at (571) 272-3208.

The examiner of Technology Center AU 1751 will consider the request for continued examination under 37 CFR 1.114.

Karen Creasy

Karen Creasy
Petitions Examiner
Office of Petitions
Office of the Deputy Commissioner
for Patent Examination Policy

---

[1] The request to apply the issue fee to the new Notice may be satisfied by completing and returning the new Issue Fee Transmittal Form PTOL-85(b), which includes the following language thereon: "Commissioner for Patents is requested to apply the Issue Fee and Publication Fee (if any) or re-apply any previously paid issue fee to the application identified above." Petitioner is advised that, whether a fee is indicated as being due or not, the Issue Fee Transmittal Form **must** be completed and timely submitted to avoid abandonment. Note the language in bold text on the first page of the Notice of Allowance and Fee(s) Due (PTOL-85).

UNITED STATES PATENT AND TRADEMARK OFFICE

COMMISSIONER FOR PATENTS
UNITED STATES PATENT AND TRADEMARK OFFICE
P.O. BOX 1450
ALEXANDRIA, VA 22313-1450
www.uspto.gov

Paper No. _____

Date : October 14, 2005

TO : Director, Office of Patent Publication

FROM : Office of the Deputy Commissioner
for Patent Examination Policy

SUBJECT : Withdrawal from Issue of

Applicant(s) :Danilo L. Lambino
Application No. :10/795,764
Filed :March 8, 2004

The above-identified application has been assigned Patent No. 6,960,557 and an issue date of November 1, 2005.

It is hereby directed that this application be withdrawn from issue at the request of the applicant.

Do not refund the issue fee.

The following erratum should be published in the Official Gazette if the above-identified application is published in the OG of November 1, 2005:

"All reference to Patent No. 6,960,557 to Danilo L. Lambino of Australia for REHYDRATABLE PERSONAL CARE COMPOSITIONS appearing in the Official Gazette of November 1, 2005 should be deleted since no patent was granted."

Karen Creasy

Karen Creasy
Petitions Examiner
Office of Petitions
Office of the Deputy Commissioner
for Patent Examination Policy

cc: Paul Harrison, MDW-4B03,(FAX-273-5468)
Deneise Boyd, MDE-3D39 (FAX-273-5124)
Mary Louise McAskill, ST-8C15 (FAX 305-4372)
Niomi Farmer, ST-8C14 (FAX-305-4372)
Mary E. Johnson (Cookie), MDE-7C71 (FAX 273-0038
Duane Davis P/OPC MDE-7D89
Tamara Greene, ST-8C13

UNITED STATES PATENT AND TRADEMARK OFFICE

Commissioner for Patents
United States Patent and Trademark Office
P.O. Box 1450
Alexandria, VA 22313-1450
www.uspto.gov

KNOBBE MARTENS OLSON & BEAR LLP
2040 MAIN STREET
FOURTEENTH FLOOR
IRVINE, CA 92614

COPY MAILED

JUN 1 9 2008

OFFICE OF PETITIONS

In re Application of :
Katsumi OCHIAI :
Application No. 10/795,765 : DECISION ON PETITION
Filed: March 08, 2004 :
Attorney Docket No. **FS.20131US0A** :

This is a decision on the petition filed June 10, 2008 under 37 CFR 1.182, requesting expedited consideration of the petition under 37 CFR 1.181(a) filed March 13, 2008, which is being treated as a petition under 37 CFR 1.137(b) to accept unintentionally abandoned application.

The petition under 37 CFR 1.182 for expedited consideration is **GRANTED**.

The petition under 37 CFR 1.137(b) is **GRANTED**.

The application became abandoned for failure to timely reply within the meaning of 37 CFR 1.113 to the final Office action, mailed August 22, 2007, which set a shortened statutory period for reply of three (3) months. A three (3) month extension of time under the provisions of 37 CFR 1.136(a) was obtained. Accordingly, the application became abandoned on February 23, 2008.

The petition satisfies the requirements of 37 CFR 1.137(b) in that petitioner has supplied (1) the reply in the form of a Request for Continued Examination (RCE) and fee of $810.00, and the submission required by 37 CFR 1.114; (2) the petition fee of $1540.00; and (3) a proper statement of unintentional delay. Accordingly, the reply to the final Office action of August 22, 2007, is accepted as having been unintentionally delayed.

Telephone inquiries related to this decision should be addressed to the Michelle R. Eason at (571) –272-4231.

This application is being referred to Technology Center AU 3617 for processing of the RCE and for appropriate action by the Examiner in the normal course of business on the amendment submitted in accordance with 37 CFR 1.114.

Thurman Page
Petitions Examiner
Office of Petitions

may be required, for example, to prevent abandonment. Otherwise, the Applicant's statement would have no meaning. In the present situation, an RCE is clearly required.

Applicant acknowledges that Applicant's "Conditional" RCE could have been more clear, but also note that the MPEP rule regarding the Conditional RCE could also be more clear.

Thus, Applicant submits that the above-noted language from Applicant's February 22, 2008 response is sufficient to be treated as a "Conditional" RCE.

Applicant thus respectfully requests that any abandonment of the present Application be withdrawn.

IN THE ALTERNATIVE, APPLICANT HEREBY PETITIONS FOR REVIVAL OF THIS APPLICATION UNDER 37 CFR 1.137(b)

1. For the Petition fee
   (X) Other than small entity - $1,540, please charge to Deposit Account No. 11-1410.

2. Reply

   a. This is a request for a Request for Continued Examination (RCE) under 37 CFR 1.114. For the Request for Continued Examination fee of $810 under 37CFR 1.17(e),
      (X) please charge Deposit Account No. 11-1410.

   b. The proposed response and extension fees to the above-noted Office Action in the form of an Amendment:
      (X) has been filed previously on February 22, 2008.

3. The entire delay in filing the required reply from the due date for the required reply until the filing of a grantable petition under 37 C.F.R. § 1.137(b) was unintentional.

(X) Please charge any additional fees or credit overpayment to Deposit Account No. 11-1410.

06/18/2008 CKHLOK 00000012 111410 10795765
01 FC:1558 1640.00 DA
02 FC:1801 810.00 DA

Respectfully submitted,

KNOBBE, MARTENS, OLSON & BEAR, LLP

Dated: March 13, 2008

By: /Michael Guiliana/
Michael A. Guiliana
Registration No. 42,611
Attorney of Record
Customer No. 20,995
(949) 760-0404

5009749
031308

MPEP § 706.07(a), ¶ III (C) (page 700-98, 8th ed., rev. 5) indicates that the Patent Office will treat a "conditional" RCE as if an RCE had been filed. In particular, the MPEP states:

> If a submission is accompanied by a "conditional" RCE and payment of the RCE fee under 37 CFR 1.17(e) **(i.e., an authorization to charge the 37 CFR 1.17(e) fee to a deposit account in the event that the submission would not otherwise be entered)**, the Office will treat the "conditional" RCE and payment as if an RCE and payment of the fee set forth in 37 CFR 1.17(e) had been filed.

MPEP § 706.07(a), ¶ III (C) (emphasis added).

Applicant notes that this appears to be the only mention of a "Conditional RCE" in the entire MPEP. There is no definition of what constitutes a "Conditional" RCE. However, this section appears to give an explanation of an acceptable "Conditional" RCE, as follows:

> (i.e., an authorization to charge the 37 CFR 1.17(e) fee to a deposit account in the event that the submission would not otherwise be entered)

Applicant submits that this parenthetical, "i.e." statement does not include ***any express relation to an RCE***. It is, however, ***conditional***. On the other hand, there are no indications in the MPEP that show the absolute minimum requirements for a "Conditional" RCE. Finally, Applicant notes that the present requirements for filing RCEs are entirely formalistic. Thus, Applicant submits that the MPEP, by way of this example, allows flexibility in the wording of a conditional RCE and allows for authorizations to deduct fees from deposit accounts to be a "Conditional" RCE.

Applicant's February 22, 2008 Amendment included an express authorization for the Office to deduct ANY fees, from Deposit Account No. 11-1410. Thus, Applicant's statement satisfies the requirement of authorization to use a deposit account.

Applicant's February 22, 2008 Amendment also included the statement that the Office can charge ANY FEES, including any fees for "additional extension of time" from the deposit account. By Applicant's language, the Office was given broad authorization to deduct fees from the deposit account for ANY purpose, beyond those related to extensions of time.

Applicant's language is also conditional. As is plain to anyone who reads such responses, Applicant's statement giving authorization to deduct fees is conditional as to any further fee that

UNITED STATES PATENT AND TRADEMARK OFFICE

COMMISSIONER FOR PATENTS
UNITED STATES PATENT AND TRADEMARK OFFICE
P.O. BOX 1450
ALEXANDRIA, VA 22313-1450
www.uspto.gov

E I DU PONT DE NEMOURS AND COMPANY
LEGAL PATENT RECORDS CENTER
BARLEY MILL PLAZA 25/1128
4417 LANCASTER PIKE
WILMINGTON, DE 19805

COPY MAILED

MAR 09 2007

OFFICE OF PETITIONS

In re Application of	:	
RUDOLPH et al	:	
Application No.: 10/795,769	:	DECISION ON PETITION
Filing Date: March 8, 2004	:	UNDER 37 CFR 1.78(a)(3)
Attorney Docket No.: IM1319USNA	:	

This is a decision on the petition under 37 CFR 1.78(a)(3), filed December 4, 2006, to accept an unintentionally delayed claim under 35 U.S.C. 120 for the benefit of priority to the prior-filed nonprovisional application set forth in the amendment filed concurrently with the instant petition.

The petition is **DISMISSED**.

A petition for acceptance of a late claim for priority under 37 CFR 1.78(a)(3) is only applicable to those applications filed on or after November 29, 2000. Further, the petition is appropriate only after the expiration of the period specified in 37 CFR 1.78(a)(2)(ii). In addition, the petition under 37 CFR 1.78(a)(3) must be accompanied by:

(1) the reference required by 35 U.S.C. 120 and 37 CFR 1.78(a)(2)(i) of the prior-filed application, unless previously submitted;
(2) the surcharge set forth in 37 CFR 1.17(t); and
(3) a statement that the entire delay between the date the claim was due under 37 CFR 1.78(a)(2)(ii) and the date the claim was filed was unintentional. The Director may require additional information where there is a question whether the delay was unintentional.

The petition does not satisfy item (1) above.

37 CFR 1.78(a)(2)(i) requires that any nonprovisional application claiming the benefit of one or more prior-filed copending nonprovisional applications must contain or be amended to contain a reference to each such prior-filed application, identifying it by application number (consisting of the series code and serial number) and indicating the relationship of the applications. The

relationship between the applications is whether the subject application is a continuation, divisional, or continuation-in-part of a prior-filed nonprovisional application. An example of a proper benefit claim is: "This application is a continuation of Application No. 10/---, filed---." A benefit claim that merely states that the application "claims priority benefit from US application number 10/---, filed---," does not comply with 37 CFR 1.72(a)(2)(i) since the proper relationship, which includes the type of continuing application, is not stated. See MPEP Section 201.11, Rev. 5, August 2006, Reference to Prior Application. The Application Data Sheet (ADS) filed December 4, 2006 fails to state the relationship of Application No. 10/507,950, filed February 15, 2005, to the instant application.

Before the petition under 37 CFR 1.78(a)(3) can be granted, a renewed petition and either an Application Data Sheet (37 CFR 1.76(a)(5)) or a proper amendment (complying with the provisions of 37 CFR 1.121) to correct the above matters are required.

Further correspondence with respect to this matter should be addressed as follows:

By mail: Mail Stop PETITIONS
Commissioner for Patents
Post Office Box 1450
Alexandria, VA 22313-1450

By hand: Customer Service Window
Mail Stop Petitions
Randolph Building
401 Dulany Street
Alexandria, VA 22314

By fax: (571) 273-8300
ATTN: Office of Petitions

Any questions concerning this matter may be directed to Bryan Lin at (571) 272-3303.

Bryan Lin

Bryan Lin
Legal Examiner
Office of PCT Legal Administration

Boris Milef
Legal Examiner
Office of Petitions

UNITED STATES PATENT AND TRADEMARK OFFICE

UNITED STATES DEPARTMENT OF COMMERCE
United States Patent and Trademark Office
Address: COMMISSIONER FOR PATENTS
P.O. Box 1450
Alexandria, Virginia 22313-1450
www.uspto.gov

IBM CORPORATION
3039 CORNWALLIS RD.
DEPT. T81 / B503, PO BOX 12195
RESEARCH TRIANGLE PARK, NC 27709

Mail Date: 04/20/2010

Applicant	: David P. Johnson	: DECISION ON REQUEST FOR
Patent Number	: 7603714	: RECALCULATION of PATENT
Issue Date	: 10/13/2009	: TERM ADJUSTMENT IN VIEW
Appliction No	: 10/795,776	: OF WYETH AND NOTICE OF INTENT TO
Filed	: 03/08/2004	: ISSUE CERTIFICATE OF CORRECTION
		:

The Request for Recalculation is **GRANTED** to the extent indicated.

The patent term adjustment has been determined to be **1050** days. The USPTO will *sua sponte* issue a certificate of correction reflecting the amount of PTA days determined by the recalculation.

Prior to the issuance of the certificate of correction, the USPTO will afford patentee an opportunity to be heard and request reconsideration. Accordingly, patentee has **one month or thirty (30) days**, whichever is longer, to file a request for reconsideration of this patent term adjustment calculation. See 35 U.S.C. 154(b)(3)(B)(ii) and 37 CFR 1.322(a)(4). No extensions of time will be granted under 37 CFR 1.136.

Patentee should use document code PET.OP if electronically filing a request for reconsideration of this patent term adjustment calculation. The patentee must also include the information required by 37 CFR 1.705(b)(2) and the fee required by 37 CFR 1.18(e). If patentee does not file a timely request for reconsideration of this patent term adjustment calculation including the information required by 37 CFR 1.705(b)(2) and the fee required by 37 CFR 1.18(e), the USPTO will issue a certificate of correction reflecting the PTA determination noted above.

Patentee should be aware that in order to preserve the right to review in the United States District Court for the District of Columbia of the USPTO patent term adjustment determination, patentee must ensure that he or she also take the steps required under 35 U.S.C. 154(b)(4)(A) in a timely manner. Nothing in the request for recalculation should be construed as providing an alternative time frame for commencing a civil action under 35 U.S.C. 154(b)(4)(A).

Any questions concerning this decision should be directed to the Office of Patent Legal Administration at 571-272-7702.

UNITED STATES PATENT AND TRADEMARK OFFICE

Commissioner for Patents
United States Patent and Trademark Office
P.O. Box 1450
Alexandria, VA 22313-1450
www.uspto.gov

MOORE, HANSEN & SUMNER, PLLP
225 SOUTH SIXTH ST
MINNEAPOLIS MN 55402

COPY MAILED
OCT 0 2 2006
OFFICE OF PETITIONS

In re Application of :
Boyd Perttu :
Application No. 10/795,782 :
Filed: March 8, 2004 :
Attorney Docket No. P18-005-01-US :

ON PETITION

This is a decision on the petition filed July 17, 2006, to revive the above identified application under 37 CFR 1.137(a)[1] or in the alternative under 37 CFR 1.137 (b)[2].

The petition under 37 CFR 1.137(a) is **DISMISSED**.
The petition under 37 CFR 1.137(b) is **GRANTED**.

A Final Office Action was mailed June 14, 2005 and set a three (3) month shortened statutory period for reply. On November 18, 2005 applicant replied with an amendment and a three month extension of time request. On December 19, 2005, an Advisory Action was mailed advising that the amendment did not place the application in condition for allowance. Since the maximum period of time obtainable for an extension of time had elapsed and since no proper reply had been received, the application had become abandoned as of September 15, 2005. Accordingly, a Notice of Abandonment was mailed on February 24, 2006.

---

[1]A grantable petition under 37 CFR 1.137(a) must be accompanied by:

(1) the required reply, unless previously filed; In a nonprovisional application abandoned for failure to prosecute, the required reply may be met by the filing of a continuing application. In a nonprovisional utility or plant application filed on or after June 8, 1995, and abandoned for failure to prosecute, the required reply may also be met by the filing of a request for continued examination in compliance with § 1.114. In an application or patent, abandoned or lapsed for failure to pay the issue fee or any portion thereof, the required reply must be the payment of the issue fee or any outstanding balance thereof.
(2) the petition fee as set forth in 37 CFR 1.17(l);
(3) a showing to the satisfaction of the Commissioner that the entire delay in filing the required reply from the due date for the reply until the filing of a grantable petition pursuant to 37 CFR 1.137(a) was unavoidable; and
(4) any terminal disclaimer (and fee as set forth in 37 CFR 1.20(d)) required pursuant to 37 CFR 1.137(c)).

[2]Effective December 1, 1997, the provisions of 37 CFR 1.137(b) now provide that where the delay in reply was unintentional, a petition may be filed to revive an abandoned application or a lapsed patent pursuant to 37 CFR 1.137(b). A grantable petition filed under the provisions of 37 CFR 1.137(b) must be accompanied by:

(1) the required reply, unless previously filed. In a nonprovisional application abandoned for failure to prosecute, the required reply may be met by the filing of a continuing application. In a nonprovisional utility or plant application filed on or after June 8, 1995, and abandoned for failure to prosecute, the required reply may also be met by the filing of a request for continued examination in compliance with § 1.114. In an application or patent, abandoned or lapsed for failure to pay the issue fee or any portion thereof, the required reply must be the payment of the issue fee or any outstanding balance thereof.
(2) the petition fee as set forth in 37 CFR 1.17(m);
(3) a statement that the entire delay in filing the required reply from the due date for the reply until the filing of a grantable petition pursuant to 37 CFR 1.137(b) was unintentional. The Commissioner may required additional information where there is a question whether the delay was unintentional; and
(4) any terminal disclaimer (and fee as set forth in 37 CFR 1.20(d)) required pursuant to 37 CFR 1.137(c)).

PETITION UNDER 37 CFR 1.137(a)

The Commissioner may revive an abandoned application if the delay in responding to the relevant outstanding Office requirement is shown to the satisfaction of the Commissioner to be "unavoidable".[3] Decisions on reviving abandoned applications on the basis of "unavoidable" delay have adopted the reasonably prudent person standard in determining if the delay was unavoidable:

> The word 'unavoidable' . . . is applicable to ordinary human affairs, and requires no more or greater care or diligence than is generally used and observed by prudent and careful men in relation to their most important business. It permits them in the exercise of this care to rely upon the ordinary and trustworthy agencies of mail and telegraph, worthy and reliable employees, and such other means and instrumentalities as are usually employed in such important business. If unexpectedly, or through the unforeseen fault or imperfection of these agencies and instrumentalities, there occurs a failure, it may properly be said to be unavoidable, all other conditions of promptness in its rectification being present.[4]

The showing of record is inadequate to establish unavoidable delay within the meaning of 35 U.S.C. § 133 and 37 CFR 1.137(a).[5] Specifically, an application is "unavoidably" abandoned only where petitioner, or counsel for petitioner, takes all action necessary for a proper response to the outstanding Office action, but through the intervention of unforeseen circumstances, such as failure of mail, telegraph, facsimile, or the negligence of otherwise reliable employees, the response is not timely received in the Office.[6]

Petitioner asserts that the delay in filing a proper response to the Office Action was due to the Advisory Action not being mailed until after the expiration of the period for reply.

---

[3] 35 U.S.C. § 133.

[4] In re Mattullath, 38 App. D.C. 497, 514-15 (1912)(quoting Ex parte Pratt, 1887 Dec. Comm'r Pat. 31, 32-33 (1887)); see also Winkler v. Ladd, 221 F. Supp. 550, 552, 138 USPQ 666, 167-68 (D.D.C. 1963), aff'd, 143 USPQ 172 (D.C. Cir. 1963); Ex parte Henrich, 1913 Dec. Comm'r Pat. 139, 141 (1913). In addition, decisions on revival are made on a "case-by-case basis, taking all the facts and circumstances into account." Smith v. Mossinghoff, 671 F.2d 533, 538, 213 USPQ 977, 982 (D.C. Cir. 1982). Finally, a petition cannot be granted where a petitioner has failed to meet his or her burden of establishing that the delay was "unavoidable." Haines v. Quigg, 673 F. Supp. 314, 316-17, 5 USPQ2d 1130, 1131-32 (N.D. Ind. 1987).

[5] See MPEP 711(c)(III)(C)(2) for a discussion of the requirements for a showing of unavoidable delay.

[6] Ex parte Pratt, 1887 Dec. Comm'r Pat. 31 (Comm'r Pat. 1887).

Pursuant to both 37 CFR 1.116 and 37 CFR 1.135(b): (A) the admission of, or refusal to admit, any amendment after final rejection, or any related proceedings, will not operate to save the application from abandonment; and (B) the admission of, or refusal to admit, any amendment not responsive to the last action, or any related proceedings, will not operate to save the application from abandonment. Accordingly, the filing of an amendment that does not place an application in condition for allowance will not extend the statutory period for reply, regardless of when the amendment is considered by the examiner, and will not prevent abandonment of the application. It is the applicant's responsibility to take the necessary action in an application under a final Office action to provide a complete and proper reply. The fact that the examiner may not have an opportunity to review any amendment prior to the end of the period for reply does not relieve applicant of the responsibility to submit a complete and proper reply prior to the end of the statutory period for reply in order to avoid abandonment. In fact, the possibility of abandonment for failure to do so is precisely the possibility that applicants are cautioned of in §§ 1.116 and 1.135(b). Petitioner was not entitled to an advisory action prior to the end of the statutory period, nor should petitioner have relied on receiving one before taking action to save the application from abandonment.

Petitioner's contention that the failure to receive the Advisory Action prior to the expiration of the period for reply caused or contributed to unavoidable delay is not well taken. The showing presented is insufficient to establish unavoidable delay within the meaning of 35 U.S.C. § 133 and 37 CFR 1.137(a). As petitioner has not provided a showing of evidence to satisfy the requirements of a grantable petition under 37 CFR 1.137(a), the petition will be dismissed.

PETITION UNDER 37 CFR 1.137(b)

This petition, as filed in the alternative under 37 CFR 1.137(b), is granted.

As the present petition was filed and decided under both 37 CFR 1.137(a) and (b), counsel's deposit account, No. 13-4300, has been charged in the amount of $250 for the unavoidable petition and $750 for the unintentional petition.

This matter is being referred to Technology Center 3643 for processing of the RCE filed July 17, 2006 with an amendment as the submission under 37 CFR 1.114.

Telephone inquiries concerning this matter may be directed to the undersigned Petitions Attorney at (571) 272-3212.

Patricia Faison-Ball

Patricia Faison-Ball
Senior Petitions Attorney
Office of Petitions

UNITED STATES PATENT AND TRADEMARK OFFICE

Commissioner for Patents
United States Patent and Trademark Office
P.O. Box 1450
Alexandria, VA 22313-1450
www.uspto.gov

MOORE & HANSEN, PLLP
225 SOUTH SIXTH ST
MINNEAPOLIS, MN 55402

COPY MAILED

SEP 25 2007

OFFICE OF PETITIONS

In re Application of

Boyd Perttu

Application No. 10/795,782

Filed: March 8, 2004

Attorney Docket No. P18-005-01-US

DECISION ON PETITION

This is a decision on the petition under 37 CFR §1.137(b), September 5, 2007to revive the above-identified application.

The petition is **granted**.

This application became abandoned for failure to timely remit the issue fee of $700.00 and publication fee of $300.00 as required by the Notice of Allowance and Issue Fee Due (the "Notice") mailed May 2, 2007. The Notice set forth a three (3) month statutory period for reply. No response was received within the allowable period. Accordingly, this application became abandoned on August 3, 2007. A Notice of Abandonment was mailed on August 28, 2007.

The issue fee and publication fee were received on September 5, 2007.

Form PTOL-85B was also received on September 5, 2007.

The application is being forwarded to the Office of Patent Publications for further processing.

Telephone inquiries concerning this matter may be directed to the undersigned at (571) 272-3222.

Kenya A. McLaughlin
Petitions Attorney
Office of Petitions

UNITED STATES PATENT AND TRADEMARK OFFICE

UNITED STATES DEPARTMENT OF COMMERCE
United States Patent and Trademark Office
Address: COMMISSIONER FOR PATENTS
P.O. Box 1450
Alexandria, Virginia 22313-1450
www.uspto.gov

KNOBBE MARTENS OLSON & BEAR LLP
2040 MAIN STREET
FOURTEENTH FLOOR
IRVINE, CA 92614

Mail Date: 07/06/2010

Applicant	: Thomas J. Lochtefeld	: DECISION ON REQUEST FOR
Patent Number	: 7666104	: RECALCULATION of PATENT
Issue Date	: 02/23/2010	: TERM ADJUSTMENT IN VIEW
Application No	: 10/795,799	: OF WYETH AND NOTICE OF INTENT TO
Filed	: 03/08/2004	: ISSUE CERTIFICATE OF CORRECTION
		:

The Request for Recalculation is **GRANTED** to the extent indicated.

The patent term adjustment has been determined to be **1503** days. The USPTO will *sua sponte* issue a certificate of correction reflecting the amount of PTA days determined by the recalculation.

Prior to the issuance of the certificate of correction, the USPTO will afford patentee an opportunity to be heard and request reconsideration. Accordingly, patentee has **one month or thirty (30) days**, whichever is longer, to file a request for reconsideration of this patent term adjustment calculation. See 35 U.S.C. 154(b)(3)(B)(ii) and 37 CFR 1.322(a)(4). No extensions of time will be granted under 37 CFR 1.136.

Patentee should use document code PET.OP if electronically filing a request for reconsideration of this patent term adjustment calculation. The patentee must also include the information required by 37 CFR 1.705(b)(2) and the fee required by 37 CFR 1.18(e). If patentee does not file a timely request for reconsideration of this patent term adjustment calculation including the information required by 37 CFR 1.705(b)(2) and the fee required by 37 CFR 1.18(e), the USPTO will issue a certificate of correction reflecting the PTA determination noted above.

Patentee should be aware that in order to preserve the right to review in the United States District Court for the District of Columbia of the USPTO patent term adjustment determination, patentee must ensure that he or she also take the steps required under 35 U.S.C. 154(b)(4)(A) in a timely manner. Nothing in the request for recalculation should be construed as providing an alternative time frame for commencing a civil action under 35 U.S.C. 154(b)(4)(A).

Any questions concerning this decision should be directed to the Office of Patent Legal Administration at 571-272-7702.

UNITED STATES PATENT AND TRADEMARK OFFICE

COMMISSIONER FOR PATENTS
UNITED STATES PATENT AND TRADEMARK OFFICE
WASHINGTON, D.C. 20231
www.uspto.gov

APPLICATION NUMBER	FILING/RECEIPT DATE	FIRST NAMED APPLICANT	ATTORNEY DOCKET NUMBER
10/795,806	03/08/2004	Richard Frederick Moore	None

CONFIRMATION NO.
7710

FAEGRE & BENSON LLP
PATENT DOCKETING
2200 WELLS FARGO CENTER
MINNEAPOLIS MN 55402

Date Mailed: August 18, 2005

Decision Dismissing Petition under 37 CFR 1.138(c)

The declaration of express abandonment will not be recognized

This is in response to the petition under 37 CFR 1.138(c), for express abandonment to avoid publication of the above-identified application.

The petition is dismissed.

The express abandonment will **not** be recognized for the reason(s) indicated below:

1. ☑ The petition under 37 CFR 1.138(c) was not filed in sufficient time to permit the appropriate officials to recognize the abandonment and remove the application from the publication process.

2. ☐ The petition was not signed by a party authorized by 37 CFR 1.33(b)(1), (3) or (4).

3. ☐ The Application was published in compliance with 35 U.S.C. 122(b), and it is available on the USPTO web site at http://www.uspto.gov/patft/index.html.

The application **has/will be published** as scheduled.

Telephone inquiries should be directed Office of Patent Publication, Pre-Grant Publication Division, 703-605-4283.

Barbara J. Debnam
Office of Patent Publication
Pre-Grant Publication Division

Rev. 10/01

UNITED STATES PATENT AND TRADEMARK OFFICE

MAR 2 5 2005

UNDER SECRETARY OF COMMERCE FOR INTELLECTUAL PROPERTY AND
DIRECTOR OF THE UNITED STATES PATENT AND TRADEMARK OFFICE
WASHINGTON, DC 20231
www.uspto.gov

MAILED

MAR 2 5 2005

OFFICE OF THE DIRECTOR
TC 3600

BANNER & WITCOFF, LTD
Ten South Wacker Drive
Suite 3000
Chicago, IL 60606

In re application of
Wayne Breda et al.
Application No. 10/795,812
Filed: March 08, 2004
For: INTRAVENOUS EQUIPMENT HANGERS

: DECISION ON REQUEST
: FOR WITHDRAWAL OF
: ATTORNEY

This is a decision on the request filed on February 09, 2005, under 37 CFR 1.36 and MPEP 402.06, requesting permission to withdraw as the attorney of record in the above-identified application.

The request is **NOT APPROVED as MOOT**.

Under 37 CFR 1.36 an attorney may withdraw only upon application to and approval by the Commissioner. It should be noted that a withdrawal is effective when approved, not when filed. Besides giving due notice to his or her client and delivering to the client all papers and property to which the client is entitled as specified under 37 CFR 10.40, approval of such a request requires that the following conditions be met:

A) Each attorney of record must sign the notice of withdrawal, or the notice must contain a clear indication of one attorney signing on behalf of another, because the Office does not recognize law firms;

B) A proper reason for the withdrawal as enumerated in 37 CFR 10.40(b) or subsection (1)-(6) of 37 CFR 10.40(c) must be provided; and

C) If withdrawal is requested in accordance with 37 CFR 10.40(c) above, there must be at least 30 days between approval of the withdrawal and the later of the expiration date of a time period for reply or the expiration date of the period which can be obtained by a petition and fee for extension of time under 37 CFR 1.136(a).

The request to withdraw as attorney in the above-identified application is not approved as moot because the attorney making the request; Charles Shifley, does not now have, and apparently never has had, power of attorney in this application.

Kenneth J. Dorner
Special Programs Examiner
Technology Center 3600
(703)308-0866

KJD/slb 03/21/05

UNITED STATES PATENT AND TRADEMARK OFFICE

COMMISSIONER FOR PATENTS
UNITED STATES PATENT AND TRADEMARK OFFICE
P.O. BOX 1450
ALEXANDRIA, VA 22313-1450
www.uspto.gov

COPY MAILED

AUG 28 2007

OFFICE OF PETITIONS

JOHN F. HOFFMAN, ESQ.
BAKER & DANIELS LLP
111 EAST WAYNE STREET, SUITE 800
FORT WAYNE, IN 46802

In re Application of	:	
James E. Grimm, et al	:	
Application No. 10/795,830	:	DECISION ON PETITION
Filed: March 8, 2004	:	UNDER 37 CFR 1.78(a)(3)
Attorney Docket No. ZIM0417	:	

This is a decision in response to the petition under 37 CFR 1.78(a)(3), filed April 2, 2007, to accept an unintentionally delayed claim under 35 U.S.C. §120 for the benefit of priority to the prior-filed nonprovisional application set forth in the amendment filed with the petition.

The petition is **GRANTED**.

A petition for acceptance of a claim for late priority under 37 CFR 1.78(a)(3) is only applicable to those applications filed on or after November 29, 2000. Further, the petition is appropriate only after the expiration of the period specified in 37 CFR 1.78(a)(2)(ii). In addition, the petition under 37 CFR 1.78(a)(3) must be accompanied by:

> **(1)** the reference required by 35 U.S.C. § 120 and 37 CFR 1.78(a)(2)(i) and (iii) of the prior-filed application(s), unless previously submitted;[1]
> **(2)** the surcharge set forth in § 1.17(t); and
> **(3)** a statement that the entire delay between the date the claim was due under 37 CFR 1.78(a)(2)(ii) and the date the claim was filed was unintentional. The Director may require additional information where there is a question whether the delay was unintentional.

All of the above requirements having been satisfied, the late claim for priority under 35 U.S.C. § 120 is accepted as being unintentionally delayed.

[1] Any nonprovisional application or international application designating the United States of America claiming the benefit of one or more prior-filed copending applications or international applications designating the United States of America must contain or be amended to contain a reference (amendment to the first line of the specification following the title or in an application data sheet (ADS) to each such prior-filed application, identifying it by application number (consisting of the series code and serial number) or international application number and international filing date filing date and indicating the relationship of the applications. Cross references to other related applications may be made when appropriate (*see* § 1.14).

The granting of the petition to accept the delayed benefit claim to the prior-filed application(s) under 37 CFR 1.78(a)(3) should not be construed as meaning that this application is entitled to the benefit of the prior-filed application(s). In order for this application to be entitled to the benefit of the prior-filed application(s), all other requirements under 35 U.S.C. § 120 and 37 CFR 1.78(a)(1) and (a)(2) must be met. Similarly, the fact that the corrected Filing Receipt accompanying this decision on petition includes the prior-filed application(s) should not be construed as meaning that applicant is entitled to the claim for benefit of priority to the prior-filed application(s) noted thereon. Accordingly, the examiner will, in due course, consider this benefit claim and determine whether the application is entitled to the benefit of the earlier filing date.

A corrected Filing Receipt, which includes the priority claim to the prior-filed nonprovisional application, accompanies this decision on petition.

Any inquiries concerning this decision may be directed to the undersigned at (571) 272-3204. All other inquiries concerning either the examination procedures or status of the application should be directed to the Technology Center.

This application is being forwarded to Technology Center Art Unit 3733 for consideration by the examiner of applicant's entitlement to claim benefit of priority under 35 U.S.C. § 120 to the prior-filed application.

Sherry D. Brinkley
Petitions Examiner
Office of Petitions

Attachment: Corrected Filing Receipt

UNITED STATES PATENT AND TRADEMARK OFFICE

UNITED STATES DEPARTMENT OF COMMERCE
United States Patent and Trademark Office
Address: COMMISSIONER FOR PATENTS
P.O. Box 1450
Alexandria, Virginia 22313-1450
www.uspto.gov

APPL NO.	FILING OR 371(c) DATE	ART UNIT	FIL FEE REC'D	ATTY.DOCKET NO	TOT CLMS	IND CLMS
10/795,830	03/08/2004	3733	1234	ZIM0417	41	4

CONFIRMATION NO. 2799

CORRECTED FILING RECEIPT

OC000000025576668

John F. Hoffman, Esq.
BAKER & DANIELS LLP
111 East Wayne Street, Suite 800
Fort Wayne, IN 46802

Date Mailed: 08/28/2007

Receipt is acknowledged of this nonprovisional patent application. The application will be taken up for examination in due course. Applicant will be notified as to the results of the examination. Any correspondence concerning the application must include the following identification information: the U.S. APPLICATION NUMBER, FILING DATE, NAME OF APPLICANT, and TITLE OF INVENTION. Fees transmitted by check or draft are subject to collection. Please verify the accuracy of the data presented on this receipt. **If an error is noted on this Filing Receipt, please write to the Office of Initial Patent Examination's Filing Receipt Corrections. Please provide a copy of this Filing Receipt with the changes noted thereon. If you received a "Notice to File Missing Parts" for this application, please submit any corrections to this Filing Receipt with your reply to the Notice. When the USPTO processes the reply to the Notice, the USPTO will generate another Filing Receipt incorporating the requested corrections (if appropriate).**

Applicant(s)

James E. Grimm, Winona Lake, IN;
Shawn E. McGinley, Fort Wayne, IN;

Power of Attorney: The patent practitioners associated with Customer Number **43963**.

Domestic Priority data as claimed by applicant

This application is a CIP of 10/325,088 12/20/2002

Foreign Applications

If Required, Foreign Filing License Granted: 05/24/2004

The country code and number of your priority application, to be used for filing abroad under the Paris Convention, is US10/795,830

Projected Publication Date: Not Applicable

Non-Publication Request: No

Early Publication Request: No

Title

Navigated orthopaedic guide and method

Preliminary Class

606

PROTECTING YOUR INVENTION OUTSIDE THE UNITED STATES

Since the rights granted by a U.S. patent extend only throughout the territory of the United States and have no effect in a foreign country, an inventor who wishes patent protection in another country must apply for a patent in a specific country or in regional patent offices. Applicants may wish to consider the filing of an international application under the Patent Cooperation Treaty (PCT). An international (PCT) application generally has the same effect as a regular national patent application in each PCT-member country. The PCT process **simplifies** the filing of patent applications on the same invention in member countries, but **does not result** in a grant of "an international patent" and does not eliminate the need of applicants to file additional documents and fees in countries where patent protection is desired.

Almost every country has its own patent law, and a person desiring a patent in a particular country must make an application for patent in that country in accordance with its particular laws. Since the laws of many countries differ in various respects from the patent law of the United States, applicants are advised to seek guidance from specific foreign countries to ensure that patent rights are not lost prematurely.

Applicants also are advised that in the case of inventions made in the United States, the Director of the USPTO must issue a license before applicants can apply for a patent in a foreign country. The filing of a U.S. patent application serves as a request for a foreign filing license. The application's filing receipt contains further information and guidance as to the status of applicant's license for foreign filing.

Applicants may wish to consult the USPTO booklet, "General Information Concerning Patents" (specifically, the section entitled "Treaties and Foreign Patents") for more information on timeframes and deadlines for filing foreign patent applications. The guide is available either by contacting the USPTO Contact Center at 800-786-9199, or it can be viewed on the USPTO website at http://www.uspto.gov/web/offices/pac/doc/general/index.html.

For information on preventing theft of your intellectual property (patents, trademarks and copyrights), you may wish to consult the U.S. Government website, http://www.stopfakes.gov. Part of a Department of Commerce initiative, this website includes self-help "toolkits" giving innovators guidance on how to protect intellectual property in specific countries such as China, Korea and Mexico. For questions regarding patent enforcement issues, applicants may call the U.S. Government hotline at 1-866-999-HALT (1-866-999-4158).

LICENSE FOR FOREIGN FILING UNDER
Title 35, United States Code, Section 184
Title 37, Code of Federal Regulations, 5.11 & 5.15

GRANTED

The applicant has been granted a license under 35 U.S.C. 184, if the phrase "IF REQUIRED, FOREIGN FILING LICENSE GRANTED" followed by a date appears on this form. Such licenses are issued in all applications where the conditions for issuance of a license have been met, regardless of whether or not a license may be required as set forth in 37 CFR 5.15. The scope and limitations of this license are set forth in 37 CFR 5.15(a) unless an earlier license has been issued under 37 CFR 5.15(b). The license is subject to revocation upon written notification. The date indicated is the effective date of the license, unless an earlier license of similar scope has been granted under 37 CFR 5.13 or 5.14.

This license is to be retained by the licensee and may be used at any time on or after the effective date thereof

unless it is revoked. This license is automatically transferred to any related applications(s) filed under 37 CFR 1.53(d). This license is not retroactive.

The grant of a license does not in any way lessen the responsibility of a licensee for the security of the subject matter as imposed by any Government contract or the provisions of existing laws relating to espionage and the national security or the export of technical data. Licensees should apprise themselves of current regulations especially with respect to certain countries, of other agencies, particularly the Office of Defense Trade Controls, Department of State (with respect to Arms, Munitions and Implements of War (22 CFR 121-128)); the Bureau of Industry and Security, Department of Commerce (15 CFR parts 730-774); the Office of Foreign Assets Control, Department of Treasury (31 CFR Parts 500+) and the Department of Energy.

NOT GRANTED

No license under 35 U.S.C. 184 has been granted at this time, if the phrase "IF REQUIRED, FOREIGN FILING LICENSE GRANTED" DOES NOT appear on this form. Applicant may still petition for a license under 37 CFR 5.12, if a license is desired before the expiration of 6 months from the filing date of the application. If 6 months has lapsed from the filing date of this application and the licensee has not received any indication of a secrecy order under 35 U.S.C. 181, the licensee may foreign file the application pursuant to 37 CFR 5.15(b).

UNITED STATES PATENT AND TRADEMARK OFFICE

Commissioner for Patents
United States Patent and Trademark Office
P.O. Box 1450
Alexandria, VA 22313-1450
www.uspto.gov

EDWARDS & ANGELL
P.O. BOX 55874
BOSTON MA 02205

COPY MAILED

MAR 22 2007

OFFICE OF PETITIONS

In re Application of	:	
Charles R. Szmanda et al	:	
Application No. 10/795,848	:	DECISION GRANTING PETITION
Filed: March 8, 2004	:	UNDER 37 CFR 1.137(b)
Attorney Docket No. 52022	:	

This is a decision on the petition under 37 CFR 1.137(b), filed November 15, 2006, to revive the above-identified application.

The petition is **GRANTED**.

The petition satisfies the conditions for revival pursuant to the provisions of 37 CFR 1.137(b) in that (1) the reply in the form of an (2) the petition fee; and (3) the required statement of unintentional delay have been received. Accordingly, the reply to the Restriction Requirement of February 17, 2006, is accepted as having been unintentionally delayed.

Telephone inquiries concerning this decision should be directed to the undersigned at (571) 272-3208.

This matter is being referred to Technology Center AU 1713.

Karen Creasy

Karen Creasy
Petitions Examiner
Office of Petitions

UNITED STATES PATENT AND TRADEMARK OFFICE

Commissioner for Patents
United States Patent and Trademark Office
P.O. Box 1450
Alexandria, VA 22313-1450
www.uspto.gov

ROHM AND HAAS ELECTRONIC MATERIALS LLC
455 FOREST STREET
MARLBOROUGH, MA 01752

COPY MAILED
AUG 29 2008

In re Application of	:	
Charles R. Szmanda et al.	:	
Application No. 10/795,848	:	DECISION ON PETITION
Filed: March 8, 2004	:	
Attorney Docket No. 52022	:	

This is a decision on the petition under the unintentional provisions of 37 CFR 1.137(b), filed February 1, 2008, to revive the above-identified application.

The petition is **GRANTED**.

This application became abandoned for failure to timely pay the issue and publication fees on or before December 13, 2007, as required by the Notice of Allowance and Fee(s) Due, mailed September 13, 2007. Accordingly, the date of abandonment of this application is December 14, 2007.

The petition satisfies the requirements of 37 CFR 1.137(b) in that petitioner has supplied (1) the reply in the form of payment of the issue fee of $1440.00 and the publication fee of $300.00, (2) the petition fee of $1540.00; and (3) a proper statement of unintentional delay.

Telephone inquiries concerning this decision should be directed to JoAnne Burke at (571) 272-4584.

This application is being referred to Office of Data Management for processing into a patent.

Irvin Dingle
Petitions Examiner
Office of Petitions

UNITED STATES PATENT AND TRADEMARK OFFICE

Commissioner for Patents
United States Patent and Trademark Office
P.O. Box 1450
Alexandria, VA 22313-1450
www.uspto.gov

Anthony P. Cho
400 W. Maple Rd., Ste. 350
Birmingham, MI 48009

MAILED

JUN 18 2004

Director's Office
Group 3700

In re application of Paul Schooler	: : :	**DECISION ON PETITION** **TO MAKE SPECIAL** **UNDER 37 CFR. 1.102(c)**
Serial Number: 10/795852 Filed: March 8, 2004	: :	

For: **RECIPROCATING CYLINDER**

This is a decision on the petition filed on March 8, 2004, under 37 CFR. 1.102(c) to make special the above identified application because of the age/health of the applicant. Since the requirements of the M.P.E.P Section 708.02 IV have been met, the petition will be GRANTED.

The examiner is directed (1) to make an interference search for possible interfering applications, (2) to promptly examine this application out of turn, and (3) if any interfering application is discovered, to examine such application simultaneously and state in the first official letter of such application that it is being taken out of turn because of a possible interference.

Petitioner is advised that this application will continue to be special, throughout its entire prosecution and pendency, including interference or appeal, if any, only is Petitioner makes a prompt bona-fide effort, in response to each Office action, to place the application in condition for allowance, even if it is necessary to conduct an interview with the Examiner to accomplish this purpose.

Summary: Decision on Petition **GRANTED**.

Richard A. Bertsch
Director
Technology Center 3700
(703) 308-0975

rt: 6/17/04

UNITED STATES PATENT AND TRADEMARK OFFICE

COMMISSIONER FOR PATENTS
UNITED STATES PATENT AND TRADEMARK OFFICE
P.O. BOX 1450
ALEXANDRIA, VA 22313-1450
www.uspto.gov

DEC -7 2004

In re Application of	:	
John Tedrick	:	
Serial No. 10/795,855	:	DECISION ON PETITION
Filed: March 9, 2004	:	TO MAKE SPECIAL
For: WRENCH, ADJUSTABLE WITH	:	
LOCKING PIN	:	

Applicant's petition, filed March 9, 2004, requests that this application be rendered special for examination in that applicant is over sixty-five (65) years of age.

The petition has been reviewed and is found to be in compliance with the requirements for special status as set forth in Section 708.02(IV) of the Manual of Patent Examining Procedure (MPEP).

PETITION GRANTED.

E. Rollins-Cross, Director
Technology Center 3700

Mr. John Tedrick
4937 S. 86th Avenue
Tulsa, OK 74145

UNITED STATES PATENT AND TRADEMARK OFFICE

COMMISSIONER FOR PATENTS
UNITED STATES PATENT AND TRADEMARK OFFICE
P.O. BOX 1450
ALEXANDRIA, VA 22313-1450
WWW.USPTO.GOV

Paper No. None

MAYER, BROWN, ROWE & MAW LLP
190 SOUTH LASALLE ST
CHICAGO IL 60603-3441

COPY MAILED

AUG 3 1 2004

OFFICE OF PETITIONS

In re Application of	:	
Jeffery Owen Phillips	:	
Application No. 10/795,860	:	
Filed: July 12, 2004	:	DECISION VACATING PREVIOUS
Attorney Docket No. 04242373	:	DECISION ON PETITION
Title: NOVEL SUBSTITUTED	:	
BENZIMIDAZOLE DOSAGE FORMS AND	:	
METHOD OF USING SAME	:	

On July 12, 2004, Petitioner submitted a petition which was granted via the mailing of a decision on August 23, 2004.

The decision set forth that Figures 1-5 would be entered, the application would receive a filing date of July 12, 2004, and the petition fee was charged to Petitioner's Deposit Account, as authorized in the petition.

It has since been determined that the Petitioner is not an authorized user of the Deposit Account.

As such, the petition fee was not submitted with the petition, and the previous decision which granted the petition is hereby **VACATED.**

The petition is **DISMISSED** for failure to submit the required petition fee.

Any reply must be submitted within **TWO (2) MONTHS** from the mail date of this decision. Extensions of time under 37 C.F.R. §1.136(a) are permitted. The reply should include a cover letter entitled "Renewed Petition." This is not a final agency action within the meaning of 5 U.S.C 704.

The renewed petition should display "Please deliver to Paul Shanoski, c/o Office of Petitions" in a prominent manner.

To help assure prompt and proper attention to your response, please see Request for Alert Concerning Submitted Petitions, 1282 Official Gazette (May 18, 2004) for further information on how to assist the Office in delivering your submission to the correct location. The Petitioner may wish to consider telephoning the undersigned one month after the submission is made to confirm that the documents were properly delivered.

Any renewed petition may be submitted by mail[1], hand-delivery[2], or facsimile[3].

The application file will be retained in the Office of Petitions for two (2) months.

Telephone inquiries regarding *this decision* should be directed to the undersigned at (703) 305-0011. Please note that on approximately September 28, 2004, the Office of Petitions will relocate to the new PTO location in Alexandria. Although the mailing address will remain the same, the general phone number for the Office of Petitions which should be used for status requests will change to 571-272-3282, and the telephone number for the undersigned will change to 571-272-3225.

Paul Shanoski
Senior Attorney
Office of Petitions
United States Patent and Trademark Office

1 Mail Stop Petition, Commissioner for Patents, United States Patent and Trademark Office, P.O. Box 1450, Alexandria, VA, 22313-1450.

2 Customer Window, Mail Stop Petition, Crystal Plaza Two, Lobby, Room 1B03, Arlington, Virginia 22202.

3 (703) 872-9306 - please note this is a central facsimile number, and as such, there will be a delay in the delivery of the facsimile to the undersigned, which could be as much as one month.

UNITED STATES PATENT AND TRADEMARK OFFICE

COMMISSIONER FOR PATENTS
UNITED STATES PATENT AND TRADEMARK OFFICE
P.O. BOX 1450
ALEXANDRIA, VA 22313-1450
WWW.USPTO.GOV

Paper No. None

MAYER, BROWN, ROWE & MAW LLP
190 SOUTH LASALLE ST
CHICAGO IL 60603-3441

COPY MAILED

AUG 2 3 2004

OFFICE OF PETITIONS

In re Application of :
Jeffery Owen Phillips :
Application No. 10/795,860 :
Filed: July 12, 2004 :
Attorney Docket No. 04242373 :
Title: NOVEL SUBSTITUTED :
BENZIMIDAZOLE DOSAGE FORMS AND :
METHOD OF USING SAME :

DECISION ON PETITION

This is a decision on the petition filed July 12, 2004.

On March 8, 2004, the above-identified application was deposited. On May 26, 2004, the Office of Initial Patent Examination (OIPE) mailed a "Notice of Incomplete Nonprovisional Application - Filing Date Not Granted (notice)", advising applicant that the application appeared to have been deposited without drawings, and that a filing date would be accorded upon the submission of the same.

On July 12, 2004, Petitioner submitted a "Response to Notice to File Missing Parts," along with Figures 1-5 and payment of the petition fee, which has been charged to Petitioner's Deposit Account as authorized in the petition. No arguments were made, no evidence was presented, and no mention was made of the desired filing date. As such, Petitioner has not explicitly stated what resolution he seeks.

It is noted that Petitioner has not alleged that the missing drawings were included on filing. In the absence of any discussion of an entitlement to the according of March 8, 2004 as the filing date, the Office must presume that the Petitioner accepts the date of deposit of the drawings as the filing date.

The petition is **GRANTED**.

The application file is being returned to OIPE for further processing with a filing date of July 12, 2004, the date of receipt of the formerly omitted items, Figures 1-5, using the original application papers filed March 8, 2004, as well as the five figures submitted with the instant petition on July 12, 2004. OIPE will then mail a corrected filing receipt.

Telephone inquiries regarding this decision should be directed to the undersigned at (703) 305-0011. Please note that on approximately September 28, 2004, the Office of Petitions will relocate to the new PTO location in Alexandria. Although the mailing address will remain the same, the general phone number for the Office of Petitions which should be used for status requests will change to 571-272-3282, and the telephone number for the undersigned will change to 571-272-3225.

Paul Shanoski
Senior Attorney
Office of Petitions
United States Patent and Trademark Office

UNITED STATES PATENT AND TRADEMARK OFFICE

COMMISSIONER FOR PATENTS
UNITED STATES PATENT AND TRADEMARK OFFICE
P.O. BOX 1450
ALEXANDRIA, VA 22313-1450
WWW.USPTO.GOV

Paper No. None

MAYER, BROWN, ROWE & MAW LLP
190 SOUTH LASALLE ST
CHICAGO IL 60603-3441

COPY MAILED

NOV 05 2004

OFFICE OF PETITIONS

In re Application of :
Jeffery Owen Phillips :
Application No. 10/795,860 :
Filed: July 12, 2004 :
Attorney Docket No. 04242373 : DECISION ON PETITION
Title: NOVEL SUBSTITUTED :
BENZIMIDAZOLE DOSAGE FORMS AND :
METHOD OF USING SAME :

This is a decision on the petition submitted on July 12, 2004.

On March 8, 2004, the above-identified application was deposited. On May 26, 2004, the Office of Initial Patent Examination (OIPE) mailed a "Notice of Incomplete Nonprovisional Application - Filing Date Not Granted (notice)", advising applicant that the application was deposited without drawings, and that a filing date would be accorded upon the submission of the drawings.

On July 12, 2004, Petitioner submitted a "Response to Notice to File Missing Parts," along with Figures 1-5 and payment of the petition fee. On August 23, 2004, a decision was mailed which granted this petition, and on August 31, 2004 a decision was mailed which vacated this petition and erroneously stated that the petition fee had not been received.

The Office regrets this error. The decision mailed on August 31, 2004 is hereby VACATED. The decision mailed August 23, 2004 is REINSTATED.

As such, the application file is being returned to OIPE for further processing with a filing date of July 12, 2004, the date

of receipt of the formerly omitted items, Figures 1-5, using the original application papers filed March 8, 2004, and the figures submitted with the original petition on July 12, 2004. OIPE will then mail a corrected filing receipt.

The general phone number for the Office of Petitions which should be used for status requests is (571) 272-3282. Telephone inquiries regarding *this decision* should be directed to the undersigned at (571) 272-3225.

Paul Shanoski
Senior Attorney
Office of Petitions
United States Patent and Trademark Office

UNITED STATES PATENT AND TRADEMARK OFFICE

UNITED STATES DEPARTMENT OF COMMERCE
United States Patent and Trademark Office
Address: COMMISSIONER FOR PATENTS
P.O. Box 1450
Alexandria, Virginia 22313-1450
www.uspto.gov

THOMAS, KAYDEN, HORSTEMEYER & RISLEY, LLP
600 GALLERIA PARKWAY, S.E.
STE 1500
ATLANTA, GA 30339-5994

Mail Date: 04/21/2010

Applicant	: Chi-Ming Huang	: DECISION ON REQUEST FOR
Patent Number	: 7600859	: RECALCULATION of PATENT
Issue Date	: 10/13/2009	: TERM ADJUSTMENT IN VIEW
Appliction No	: 10/795,878	: OF WYETH AND NOTICE OF INTENT TO
Filed	: 03/08/2004	: ISSUE CERTIFICATE OF CORRECTION
		:

The Request for Recalculation is **GRANTED** to the extent indicated.

The patent term adjustment has been determined to be **268** days. The USPTO will *sua sponte* issue a certificate of correction reflecting the amount of PTA days determined by the recalculation.

Prior to the issuance of the certificate of correction, the USPTO will afford patentee an opportunity to be heard and request reconsideration. Accordingly, patentee has **one month or thirty (30) days**, whichever is longer, to file a request for reconsideration of this patent term adjustment calculation. See 35 U.S.C. 154(b)(3)(B)(ii) and 37 CFR 1.322(a)(4). No extensions of time will be granted under 37 CFR 1.136.

Patentee should use document code PET.OP if electronically filing a request for reconsideration of this patent term adjustment calculation. The patentee must also include the information required by 37 CFR 1.705(b)(2) and the fee required by 37 CFR 1.18(e). If patentee does not file a timely request for reconsideration of this patent term adjustment calculation including the information required by 37 CFR 1.705(b)(2) and the fee required by 37 CFR 1.18(e), the USPTO will issue a certificate of correction reflecting the PTA determination noted above.

Patentee should be aware that in order to preserve the right to review in the United States District Court for the District of Columbia of the USPTO patent term adjustment determination, patentee must ensure that he or she also take the steps required under 35 U.S.C. 154(b)(4)(A) in a timely manner. Nothing in the request for recalculation should be construed as providing an alternative time frame for commencing a civil action under 35 U.S.C. 154(b)(4)(A).

Any questions concerning this decision should be directed to the Office of Patent Legal Administration at 571-272-7702.

UNITED STATES PATENT AND TRADEMARK OFFICE

Commissioner for Patents
United States Patent and Trademark Office
P.O. Box 1450
Alexandria, VA 22313-1450
www.uspto.gov

PFIZER INC
Mary J Hosley
150 EAST 42ND STREET
MS: 150/02/E112
NEW YORK NY 10017-5612

COPY MAILED

DEC 0 8 2009

OFFICE OF PETITIONS

In re Application of	:	
Cade et al.	:	
Application No. 10/795898	:	ON PETITION FOR
Filing or 371(c) Date: 03/08/2004	:	RECONSIDERATION OF
Title of Invention: METHOD OF	:	PATENT TERM ADJUSTMENT
SEALING A HARD SHELL CAPSULE	:	

This is in response to the PETITION FOR RECONSIDERATION OF PTA, 37 CFR 1.705(b), filed September 21, 2009. Applicant submits that the correct patent term adjustment to be indicated on the patent is 829 days, not 472 days as calculated by the Office as of the mailing of the initial determination of patent term adjustment. Applicant requests this correction solely on the basis that the Office will take in excess of three years to issue this patent.

As the instant application for patent term adjustment requests reconsideration of the patent term adjustment as it relates to the Office's failure to issue the patent within 3 years of the filing date, the application for patent term adjustment under 37 CFR 1.705(b) is **DISMISSED as PREMATURE**.

Knowledge of the actual date the patent issues is required to calculate the amount, if any, of additional patent term patentee is entitled to for Office failure to issue the patent within 3 years. See § 1.702(b). (This is true even where a request for continued examination (RCE) was filed). The computer will not undertake the § 1.702(b) calculation until the actual date of issuance of the patent has been determined. Likewise, the computer will not calculate any further Office delay under § 1.702(a)(4) or applicant delay under § 1.704(c)(10) until the actual date of issuance of the patent has been determined. As such, the Office can not make a determination on the correctness of the patent term adjustment until the patent has issued.

Requesting reconsideration of the patent term adjustment to be indicated on the patent under 37 CFR 1.705(b) based on the initial determination of patent term adjustment and a projected issuance date of the patent (or even the filing date of the request for continued examination) is premature. Accordingly, it is appropriate to dismiss as premature such a request.

Rather than file a request for reconsideration of patent term adjustment under 37 CFR 1.705(b) contesting the 37 CFR 1.702(b) calculation at the time of the mailing of the notice of allowance, applicant is advised that they may wait until the time of the issuance of the patent and file a request for reconsideration of the patent term adjustment pursuant to 37 CFR 1.705(d). As the USPTO does not calculate the amount of time earned pursuant to 37 CFR 1.702(b) until the time of the issuance of the patent, the Office will consider any request for reconsideration of the patent term adjustment due to an error in the calculation of 37 CFR 1.702(b) to be timely if the request for reconsideration is filed within two months of the issuance of the patent. However, as to all other bases for contesting the initial determination of patent term adjustment received with the notice of allowance, applicant must timely file an application for patent term adjustment prior to the payment of the issue fee[1].

The Office acknowledges submission of the $200.00 fee set forth in 37 CFR 1.18(e) for consideration of the application for patent term adjustment under 37 CFR 1.705(b).

Any request for reconsideration of the patent term adjustment indicated on the patent must be timely filed within 2 months after issuance pursuant to 37 CFR 1.705(d) and must include payment of the required fee under 37 CFR 1.18(e).

The Office of Data Management has been advised of this decision. This application is being referred to the Office of Data Management for issuance of the patent.

Telephone inquiries specific to this decision should be directed to Attorney Derek Woods at (571) 272-3232.

/ALESIA M. BROWN//

Alesia M. Brown
Senior Petitions Attorney
Office of Petitions
Office of the Deputy Commissioner
for Patent Examination Policy

---

[1] For example, if applicant disputes both the calculation of patent term adjustment under 37 CFR 1.702(a)(1) for Office failure to mail a first Office action or notice of allowance not later than fourteen months after the date on which the application was filed and under 37 CFR 1.702(b) for Office failure to issue a patent within three years of the actual filing date of the application, then applicant must still timely file an application for patent term adjustment prior to the payment of the issue fee to contest the calculation of Office delay in issuing a first Office action or notice of allowance. See 37 CFR 1.705(b) and 35 U.S.C. 154(b)(3)(B). A dispute as to the calculation of the §1.702(a)(1) period raised on request for reconsideration of patent term adjustment under 37 CFR 1.705(d) will be dismissed as untimely filed.

UNITED STATES PATENT AND TRADEMARK OFFICE

UNITED STATES DEPARTMENT OF COMMERCE
United States Patent and Trademark Office
Address: COMMISSIONER FOR PATENTS
P.O. Box 1450
Alexandria, Virginia 22313-1450
www.uspto.gov

PFIZER INC
Mary J Hosley
150 EAST 42ND STREET
MS: 150/02/E112
NEW YORK, NY 10017-5612

Mail Date: 04/20/2010

Applicant	: Dominique Nicolas Cade	: DECISION ON REQUEST FOR
Patent Number	: 7645407	: RECALCULATION of PATENT
Issue Date	: 01/12/2010	: TERM ADJUSTMENT IN VIEW
Appliction No	: 10/795,898	: OF WYETH AND NOTICE OF INTENT TO
Filed	: 03/08/2004	: ISSUE CERTIFICATE OF CORRECTION
		:

The Request for Recalculation is **GRANTED** to the extent indicated.

The patent term adjustment has been determined to be **827** days. The USPTO will *sua sponte* issue a certificate of correction reflecting the amount of PTA days determined by the recalculation.

Prior to the issuance of the certificate of correction, the USPTO will afford patentee an opportunity to be heard and request reconsideration. Accordingly, patentee has **one month or thirty (30) days**, whichever is longer, to file a request for reconsideration of this patent term adjustment calculation. See 35 U.S.C. 154(b)(3)(B)(ii) and 37 CFR 1.322(a)(4). No extensions of time will be granted under 37 CFR 1.136.

Patentee should use document code PET.OP if electronically filing a request for reconsideration of this patent term adjustment calculation. The patentee must also include the information required by 37 CFR 1.705(b)(2) and the fee required by 37 CFR 1.18(e). If patentee does not file a timely request for reconsideration of this patent term adjustment calculation including the information required by 37 CFR 1.705(b)(2) and the fee required by 37 CFR 1.18(e), the USPTO will issue a certificate of correction reflecting the PTA determination noted above.

Patentee should be aware that in order to preserve the right to review in the United States District Court for the District of Columbia of the USPTO patent term adjustment determination, patentee must ensure that he or she also take the steps required under 35 U.S.C. 154(b)(4)(A) in a timely manner. Nothing in the request for recalculation should be construed as providing an alternative time frame for commencing a civil action under 35 U.S.C. 154(b)(4)(A).

Any questions concerning this decision should be directed to the Office of Patent Legal Administration at 571-272-7702.

UNITED STATES PATENT AND TRADEMARK OFFICE

Commissioner for Patents
United States Patent and Trademark Office
P.O. Box 1450
Alexandria, VA 22313-1450
www.uspto.gov

DELPHI TECHNOLOGIES, INC.
M/C 480-410-202
P.O. BOX 5052
TROY, MI 48007

COPY MAILED

JUN 13 2005

OFFICE OF PETITIONS

In re Application of :
Eric D. Pattok et al :
Application No. 10/795,908 :
Filed: March 8, 2004 :
Attorney Docket No. DP-310326

ON PETITION

This is a decision on the petition, filed June 10, 2005 under 37 CFR 1.313(c)(2), to withdraw the above-identified application from issue after payment of the issue fee.

The petition is **GRANTED**.

The above-identified application is withdrawn from issue for consideration of a submission under 37 CFR 1.114 (request for continued examination). See 37 CFR 1.313(c)(2).

Petitioner is advised that the issue fee paid on June 1, 2005 in the above-identified application cannot be refunded. If, however, the above-identified application is again allowed, petitioner may request that it be applied towards the issue fee required by the new Notice of Allowance.[1]

Telephone inquiries should be directed to Irvin Dingle at (571) 272-3210.

This matter is being referred to Technology Center AU 2855 for processing of the request for continued examination under 37 CFR 1.114 and for consideration of the concurrently filed Information Disclosure Statement.

Irvin Dingle
Petitions Examiner
Office of Petitions
Office of the Deputy Commissioner
for Patent Examination Policy

---

[1] The request to apply the issue fee to the new Notice may be satisfied by completing and returning the new Issue Fee Transmittal Form PTOL-85(b), which includes the following language thereon: Commissioner for Patents is requested to apply the Issue Fee and Publication Fee (if any) or re-apply any previously paid issue fee to the application identified above. Petitioner is advised that, whether a fee is indicated as being due or not, the Issue Fee Transmittal Form **must** be completed and timely submitted to avoid abandonment. Note the language in bold text on the first page of the Notice of Allowance and Fee(s) Due (PTOL-85).

UNITED STATES PATENT AND TRADEMARK OFFICE

Commissioner for Patents
United States Patent and Trademark Office
P.O. Box 1450
Alexandria, VA 22313-1450
www.uspto.gov

STALLMAN & POLLOCK LLP
353 SACRAMENTO STREET, SUITE 2200
SAN FRANCISCO, CA 94111

COPY MAILED

AUG 01 2008

In re Patent No. 7,233,390	:	
Issue Date: June 19, 2007	:	
Application No. 10/795,915	:	NOTICE UNDER 37 CFR. 1.28(C)
Filed: March 8, 2004	:	
Attorney Docket No. **TWI-23710**	:	

This is a notice regarding your request for acceptance of a fee deficiency submission under 37 CFR 1.28. On September 1, 1998, the Court of Appeals for the Federal Circuit held that 37 CFR 1.28(c) is the sole provision governing the time for correction of the erroneous payment of the issue fee as a small entity. **See DH Technology v. Synergystex International, Inc. 154 F.3d 1333, 47 USPQ2d 1865 (Fed. Cir. Sept. 1, 1998).**

The Office no longer investigates or rejects original or reissue applications under 37 CFR 1.56. **1098 Off. Gaz. Pat. Office 502 (January 3, 1989).** Therefore, nothing in this Notice is intended to imply that an investigation was done.

Your fee deficiency submission under 37 CFR 1.28 is hereby **ACCEPTED.**

This application is no longer entitled to small entity status. Accordingly, all future fees paid in this application must be paid at the large entity rate.

Inquiries related to this communication should be directed to Monica A. Graves at (571) 272-7253.

Brian W. Brown
Petitions Examiner
Office of Petitions

UNITED STATES PATENT AND TRADEMARK OFFICE

Commissioner for Patents
United States Patent and Trademark Office
P.O. Box 1450
Alexandria, VA 22313-1450
www.uspto.gov

RALPH E JOCKE
231 SOUTH BROADWAY
MEDINA OH 44256

COPY MAILED
JUL 22 2004
OFFICE OF PETITIONS

In re Application of	:	
Natarajan Ramachandran	:	
Application No. 10/795,926	:	DECISION ON PETITION
Filed: March 8, 2004	:	
Attorney Docket No. D-1107 R2 CIP3	:	

This is a decision on the "PETITION TO ESTABLISH PRIOR RECEIPT IN THE U.S. PATENT AND TRADEMARK OFFICE OF ITEM(S) CONSIDERED AS OMITTED BY THE U.S. PATENT AND TRADEMARK OFFICE," filed June 21, 2004, which is being treated as a petition under 37 CFR 1.53 to accord the above-identified application a filing date of March 8, 2004, with Figures 21 - 24 of the drawings as part of the original disclosure.

The petition is **GRANTED**.

The application was filed on March 8, 2004. However, on May 28, 2004, the Initial Patent Examination Division mailed a "Notice to File Missing Parts of Nonprovisional Application". The Notice informed applicant that the application had been accorded a filing date. However, Figures 21 - 24 of the drawings appeared to have been omitted.

Applicant filed the instant petition on June 21, 2004. Applicant maintains that the application as originally filed included Figures 21 - 24 of the drawings, as evidenced by the postcard receipt identifying this application, itemizing "24 pg Dwg. Sheets" as enclosed, bearing a United States Patent and Trademark Office date-stamp of March 8, 2004, and lacking any notation of non receipt of any item listed.

A postcard receipt which itemizes and properly identifies the items which are being filed serves as *prima facie* evidence of receipt in the Office of all items listed thereon on the date stamped thereon by the Office. See MPEP 503.

Given the basis for granting this petition, no fee was required, and none has been charged.

The application is being forwarded to the Office of Initial Patent Examination (OIPE) for further processing with a filing date of March 8, 2004, using the application papers received in the Office on that date and Figures 21 - 24 of the drawings as resupplied on petition filed June 21, 2004.

Telephone inquiries related to this decision should be directed to Petitions Attorney Cliff Congo at 703-305-0272.

Patricia Faison-Ball for

Charles Pearson
Director
Office of Petitions

UNITED STATES PATENT AND TRADEMARK OFFICE

UNITED STATES DEPARTMENT OF COMMERCE
United States Patent and Trademark Office
Address: COMMISSIONER FOR PATENTS
P.O. Box 1450
Alexandria, Virginia 22313-1450
www.uspto.gov

MILLER PATENT SERVICES
2500 DOCKERY LANE
RALEIGH, NC 27606

Mail Date: 04/21/2010

Applicant	: Leo M. Pedlow JR.	: DECISION ON REQUEST FOR
Patent Number	: 7623662	: RECALCULATION of PATENT
Issue Date	: 11/24/2009	: TERM ADJUSTMENT IN VIEW
Appliction No	: 10/795,929	: OF WYETH AND NOTICE OF INTENT TO
Filed	: 03/08/2004	: ISSUE CERTIFICATE OF CORRECTION
		:

The Request for Recalculation is **GRANTED** to the extent indicated.

The patent term adjustment has been determined to be **1206** days. The USPTO will *sua sponte* issue a certificate of correction reflecting the amount of PTA days determined by the recalculation.

Prior to the issuance of the certificate of correction, the USPTO will afford patentee an opportunity to be heard and request reconsideration. Accordingly, patentee has **one month or thirty (30) days**, whichever is longer, to file a request for reconsideration of this patent term adjustment calculation. See 35 U.S.C. 154(b)(3)(B)(ii) and 37 CFR 1.322(a)(4). No extensions of time will be granted under 37 CFR 1.136.

Patentee should use document code PET.OP if electronically filing a request for reconsideration of this patent term adjustment calculation. The patentee must also include the information required by 37 CFR 1.705(b)(2) and the fee required by 37 CFR 1.18(e). If patentee does not file a timely request for reconsideration of this patent term adjustment calculation including the information required by 37 CFR 1.705(b)(2) and the fee required by 37 CFR 1.18(e), the USPTO will issue a certificate of correction reflecting the PTA determination noted above.

Patentee should be aware that in order to preserve the right to review in the United States District Court for the District of Columbia of the USPTO patent term adjustment determination, patentee must ensure that he or she also take the steps required under 35 U.S.C. 154(b)(4)(A) in a timely manner. Nothing in the request for recalculation should be construed as providing an alternative time frame for commencing a civil action under 35 U.S.C. 154(b)(4)(A).

Any questions concerning this decision should be directed to the Office of Patent Legal Administration at 571-272-7702.

United States
Patent And
Trademark Office

P.O. Box 1450, Alexandria, Virginia 22313-1450 – www.uspto.gov

PETITION DECISION

04/23/04

Leona L. Lauder
177 Post Street
Suite 800
San Francisco, CA 94108

Dear Applicant:

The Box PG Pub replacement drawings for application number 10/795933 received on 04/06/04 by the U. S. Patent and Trademark Office will be included for patent publication.

Telephone inquiries should be directed to Kaletus King, Office of Pre-Grant Publication 703 605-4283.

Kaletus King

Signature of Reviewer, Office of Pre-Grant Publication

UNITED STATES PATENT AND TRADEMARK OFFICE

Commissioner for Patents
United States Patent and Trademark Office
P.O. Box 1450
Alexandria, VA 22313-1450
www.uspto.gov

ROSSI, KIMMS & McDOWELL, LLP
P. O. Box 826
Ashburn, VA 20146-0826

MAILED

DEC 0 7 2006

DIRECTOR'S OFFICE
TECHNOLOGY CENTER 2600

In re Application of	:	
Atsushi Matsumoto	:	DECISION ON REQUEST TO
Application No. 10/795943	:	PARTICIPATE IN PATENT
Filed: March 8, 2004	:	PROSECUTION HIGHWAY
Attorney Docket No. CANO: 127	:	PILOT PROGRAM AND PETITION
	:	TO MAKE SPECIAL UNDER
	:	37 CFR 1.102(d)

This is a decision on the request to participate in the Patent Prosecution Highway (PPH) pilot program and the petition under 37 CFR 1.102(d), filed November 27, 2006, to make the above-identified application special.

The request and petition are **GRANTED**.

A grantable request to participate in the PPH pilot program and petition to make special require:

(1) The U.S. application must validly claim priority under 35 U.S.C. 119(a) to one or more applications filed in the JPO;
(2) Applicant must submit a copy of the allowable/patentable claim(s) from the JPO application(s) along with an English translation thereof and a statement that the English translation is accurate;
(3) All the claims in the U.S. application must sufficiently correspond or be amended to sufficiently correspond to the allowable/patentable claim(s) in the JPO application(s);
(4) Examination of the U.S. application has not begun;
(5) Applicant must submit a copy of all the office actions from each of the JPO application(s) containing the allowable/patentable claim(s) along with an English translation thereof and a statement that the English translation is accurate;
(6) Applicant must submit an IDS listing the documents cited by the JPO examiner in the JPO office action along with copies of documents except U.S. patents or U.S. patent application publications; and
(7) The required petition fee under 37 CFR 1.17(h).

The request to participate in the PPH pilot program and petition comply with the above requirements. Accordingly, the above-identified application has been accorded "special" status.

Telephone inquiries concerning this decision should be directed to John Peng at 571-272-7272.

All other inquiries concerning the examination or status of the application should be directed to Patent Application Information Retrieval (PAIR) system.

The application is being forwarded to the examiner for action on the merits commensurate with this decision.

John Peng
TC 2600
Quality Assurance Specialist

UNITED STATES PATENT AND TRADEMARK OFFICE

Commissioner for Patents
United States Patent and Trademark Office
P.O. Box 1450
Alexandria, VA 22313-1450
www.uspto.gov

DATE: January 16, 2008
TO: Certificates of Correction Branch
FROM: Duane S. Smith
SPE, Art Unit 1797
SUBJECT: REQUEST FOR CERTIFICATE OF CORRECTION

Please issue a Certificate of Correction in U. S. Letters Patent No. 7,001,520 as specified on the attached Certificate.

DUANE SMITH
SUPERVISORY PATENT EXAMINER
1-16-08
Duane S. Smith, SPE
Art Unit 1797

UNITED STATES PATENT AND TRADEMARK OFFICE

CERTIFICATE

Patent No. 7,001,520
Patented: February 21, 2007

On petition requesting issuance of a certificate for correction of inventorship pursuant to 35 U.S.C. 256, it has been found that the above identified patent, through error and without deceptive intent, improperly sets forth the inventorship. Accordingly, it is hereby certified that the correct inventorship of this patent is:

Jeffrey Held, Satya P. Chauhan, and Anthony J. Tomasello.

DUANE SMITH
SUPERVISORY PATENT EXAMINER

1-16-08

Duane S. Smith
Supervisory Patent Examiner
Art Unit 1797

UNITED STATES PATENT AND TRADEMARK OFFICE

Commissioner for Patents
United States Patent and Trademark Office
P.O. Box 1450
Alexandria, VA 22313-1450
www.uspto.gov

LERNER, DAVID, LITTENBERG,
KRUMHOLZ & MENTLIK
600 SOUTH AVENUE WEST
WESTFIELD NJ 07090

COPY MAILED

JAN 26 2005

OFFICE OF PETITIONS

In re Application of
Robert Foster and Douglas Costall
Application No. 10/795,945
Filed: March 8, 2004
Attorney Docket Number: MOFFAT 3.0-033
Title of Invention: Hybrid Coiled Tubing/ Fluid Pumping Unit

DECISION GRANTING STATUS UNDER 37 CFR 1.47(a)

This is in response to the petition under 37 CFR 1.47(a), filed December 28, 2004.

The petition is GRANTED.

Petitioner has shown that the non-signing inventor has refused to join in the filing of the above-identified application after having been presented with the application papers. The affidavit of Jim Ashbaugh attest a copy of the application was sent to non-signing inventor's last known address. The non-signing inventor orally refused to execute the application papers.

The above-identified application and papers have been reviewed and found in compliance with 37 CFR 1.47(a). This application is hereby accorded Rule 1.47(a) status.

As provided in Rule 1.47(c), this Office will forward notice of this application's filing to the non-signing inventor at the address given in the petition. Notice of the filing of this application will also be published in the Official Gazette.

This application is being forwarded to the Office of Initial Patent Examination for further processing.

Telephone inquiries related to this decision may be directed to the undersigned at (571) 272-3215.

Charlema R. Grant

Charlema R. Grant
Petitions Attorney
Office of Petitions

UNITED STATES PATENT AND TRADEMARK OFFICE

Commissioner for Patents
United States Patent and Trademark Office
P.O. Box 1450
Alexandria, VA 22313-1450
www.uspto.gov

Robert Joseph Foster
Box 85, Site 6, RRS
Calgary, Alberta
Canada T2P 2G6

COPY MAILED

JAN 26 2005

OFFICE OF PETITIONS

In re Application of
Robert Foster and Douglas Costall
Application No. 10/795,945
Filed: March 8, 2004
Attorney Docket Number: MOFFAT 3.0-033
Title of Invention: Hybrid Coiled Tubing/ Fluid Pumping Unit

LETTER

Dear Mr. Foster:

You are named as a joint inventor in the above-identified United States patent application filed under the provisions of 35 U.S.C. 116 (United States Code) and 37 C.F.R. § 1.47(a), Rules of Practice in Patent Cases. Should a patent be granted on the application you will be designated therein as a joint inventor.

As a named inventor you are entitled to inspect any paper in the file wrapper of the application, order copies of all or any part thereof (at a prepaid cost as per 37 C.F.R. § 1.19) or make your position of record in the application. Alternatively, you may arrange to do any of the preceding through a registered patent attorney or agent presenting written authorization from you. If you care to join the application, applicant (see below) would presumably assist you. Joining in the application would entail the filing of an appropriate oath or declaration by you pursuant to 37 C.F.R. § 1.63.

Telephone inquiries regarding this communication should be directed to Petitions Attorney Charlema R. Grant at (571) 272-3215. Requests for information regarding your application should be directed to the File Information Unit at (703) 308-2733. Information regarding how to pay for and order a copy of the application, or a specific paper in the application, should be directed to Certification Division at (703) 308-9726 or 1-800-972-6382 (outside the Washington D.C. area).

Charlema R. Grant

Charlema R. Grant
Petitions Attorney
Office of Petitions

Robert B. Cohen
Lerner, David, Littenberg
Krumholz & Mentlik, LLP
600 South Avenue West
Westfield, NJ 07090

UNITED STATES PATENT AND TRADEMARK OFFICE

Commissioner for Patents
United States Patent and Trademark Office
P.O. Box 1450
Alexandria, VA 22313-1450
www.uspto.gov

THADDIUS J. CARVIS
102 NORTH KING STREET
LEESBURG, VA 20176

COPY MAILED
APR 25 2005
OFFICE OF PETITIONS

In re Application of :
James A. Bolton :
Application No. 10/795,947 : DECISION GRANTING PETITION
Filed: March 8, 2004 : UNDER 37 CFR 1.137(b)
Attorney Docket No. Grafted 1.3 :

This is a decision on the petition under 37 CFR 1.137(b), filed December 23, 2004, to revive the above-identified application.

The petition is **GRANTED**.

The above-identified application became abandoned for failure to reply in a timely manner to the Notice To File Missing Parts Of Nonprovisional Application mailed May 27, 2004, which set a shortened statutory period for reply of two (2) months. No extensions of time under the provisions of 37 CFR 1.136(a) were obtained. Accordingly, the above-identified application became abandoned on July 28, 2004.

Telephone inquiries concerning this decision should be directed to the undersigned at (571) 272-3208.

This matter is being referred to the Office of Initial Patent Examination.

Karen Creasy

Karen Creasy
Petitions Examiner
Office of Petitions
Office of the Deputy Commissioner
for Patent Examination Policy

SPE RESPONSE FOR CERTIFICATE OF CORRECTION

Paper No.: _____

DATE : 03/02/10

TO SPE OF : ART UNIT 2626

SUBJECT : Request for Certificate of Correction for Appl. No.: 10795962 Patent No.: 7634400

Please respond to this request for a certificate of correction within 7 days.

FOR IFW FILES:

Please review the requested changes/corrections as shown in the **COCIN** document(s) in the IFW application image. No new matter should be introduced, nor should the scope or meaning of the claims be changed.

Please complete the response (see below) and forward the completed response to scanning using document code **COCX**.

FOR PAPER FILES:

Please review the requested changes/corrections as shown in the attached certificate of correction. Please complete this form (see below) and forward it with the file to:

Certificates of Correction Branch (C of C)
Randolph Square 9D40-D
Palm Location 7580

You can fax the Directors/SPE response to 571-270-9990

Lamonte Newsome

Certificates of Correction Branch

703-756-1574

Thank You For Your Assistance

The request for issuing the above-identified correction(s) is hereby:

Note your decision on the appropriate box.

- ☒ **Approved** — **All** changes apply.
- ☐ **Approved in Part** — Specify below which changes **do not** apply.
- ☐ **Denied** — State the reasons for denial below.

Comments: _____

/David R. Hudspeth/ — **SPE**

2626 — **Art Unit**

UNITED STATES PATENT AND TRADEMARK OFFICE

UNITED STATES DEPARTMENT OF COMMERCE
United States Patent and Trademark Office
Address: COMMISSIONER FOR PATENTS
P.O. Box 1450
Alexandria, Virginia 22313-1450
www.uspto.gov

STMICROELECTRONICS, INC.
MAIL STATION 2346
1310 ELECTRONICS DRIVE
CARROLLTON, TX 75006

Mail Date: 04/20/2010

Applicant	: Charles Averty	: DECISION ON REQUEST FOR
Patent Number	: 7634400	: RECALCULATION of PATENT
Issue Date	: 12/15/2009	: TERM ADJUSTMENT IN VIEW
Appliction No	: 10/795,962	: OF WYETH AND NOTICE OF INTENT TO
Filed	: 03/08/2004	: ISSUE CERTIFICATE OF CORRECTION
		:

The Request for Recalculation is **GRANTED** to the extent indicated.

The patent term adjustment has been determined to be **1472** days. The USPTO will *sua sponte* issue a certificate of correction reflecting the amount of PTA days determined by the recalculation.

Prior to the issuance of the certificate of correction, the USPTO will afford patentee an opportunity to be heard and request reconsideration. Accordingly, patentee has **one month or thirty (30) days**, whichever is longer, to file a request for reconsideration of this patent term adjustment calculation. See 35 U.S.C. 154(b)(3)(B)(ii) and 37 CFR 1.322(a)(4). No extensions of time will be granted under 37 CFR 1.136.

Patentee should use document code PET.OP if electronically filing a request for reconsideration of this patent term adjustment calculation. The patentee must also include the information required by 37 CFR 1.705(b)(2) and the fee required by 37 CFR 1.18(e). If patentee does not file a timely request for reconsideration of this patent term adjustment calculation including the information required by 37 CFR 1.705(b)(2) and the fee required by 37 CFR 1.18(e), the USPTO will issue a certificate of correction reflecting the PTA determination noted above.

Patentee should be aware that in order to preserve the right to review in the United States District Court for the District of Columbia of the USPTO patent term adjustment determination, patentee must ensure that he or she also take the steps required under 35 U.S.C. 154(b)(4)(A) in a timely manner. Nothing in the request for recalculation should be construed as providing an alternative time frame for commencing a civil action under 35 U.S.C. 154(b)(4)(A).

Any questions concerning this decision should be directed to the Office of Patent Legal Administration at 571-272-7702.

UNITED STATES PATENT AND TRADEMARK OFFICE

Commissioner for Patents
United States Patent and Trademark Office
P.O. Box 1450
Alexandria, VA 22313-1450
www.uspto.gov

MARK D. BARRISH
TOWNSEND AND TOWNSEND AND CREW, LLP
TWO EMBARCADERO CENTER
EIGHTH FLOOR
SAN FRANCISCO, CA 94111-3834

MAILED

MAY 28 2009

OFFICE OF PETITIONS

In re Application of	:	
Gere et al.	:	DECISION ON PETITION
Application No. 10/795,963	:	TO WITHDRAW
Filed: March 7, 2004	:	FROM RECORD
Attorney Docket No. 017516-001520US	:	

This is a decision on the Request to Withdraw as attorney or agent of record under 37 C.F.R. § 1.36(b), filed March 31, 2005 and April 4, 2005.

The request is **NOT APPROVED** because it is moot.

A review of the file record indicates that on March 29, 2005 the power of attorney to Townsend and Townsend and Crew, LLP was revoked by the assignee of the patent application. Accordingly, the request to withdraw under 37 C.F.R. § 1.36(b) is moot.

All future communications from the Office will be directed to the below-listed address until otherwise notified by applicant.

Telephone inquires concerning this decision should be directed to the undersigned at 571-272-7751. All other inquires concerning either the examination or status of the application should be directed to the Technology Center.

Joan Olszewski

Joan Olszewski
Petitions Examiner
Office of Petitions

cc: Patent Dept
Intuitive Surgical, Inc
1266 Kifer Rd
Building 101
Sunnyvale CA 94086

UNITED STATES PATENT AND TRADEMARK OFFICE

COMMISSIONER FOR PATENTS
UNITED STATES PATENT AND TRADEMARK OFFICE
P.O. BOX 1450
ALEXANDRIA, VA 22313-1450
www.uspto.gov

MAIL

MAY 0 4 2005

DIRECTOR OFFICE
TECHNOLOGY CENTER 2100

MATTINGLY, STANGER, MALUR & BRUNDIDGE, P.C.
1800 DIAGONAL ROAD
SUITE 370
ALEXANDRIA VA 22314

In re Application of: Yagi
Application No. 10/795,996
Filed: March 10, 2004
For: CONTROL METHOD FOR DATA TRANSFER DEVICE, DATA TRANSFER CIRCUIT, AND DISK ARRAY DEVICE

DECISION ON PETITION
TO MAKE SPECIAL
(ACCELERATED EXAMINATION)
UNDER M.P.E.P. §708.02 (VIII)

This is a response to the petition filed 08 March 2005, under 37 C.F.R. §1.102(d) and M.P.E.P. §708.02 (VIII): Accelerated Examination, to make the above-identified application special.

The Petition is **GRANTED**.

M.P.E.P. §708.02, Section VIII which sets out the prerequisites for a grantable petition for Accelerated Examination under 37 C.F.R. §1.102(d) states in relevant part:

A new application (one which has not received any examination by the examiner) may be granted special status provided that applicant (and this term includes applicant's attorney or agent) complies with each of the following items:

(a) Submits a petition to make special accompanied by the fee set forth in **37 CFR 1.17(h)**;

(b) Presents all claims directed to a single invention, or if the Office determines that all the claims presented are not obviously directed to a single invention, will make an election without traverse as a prerequisite to the grant of special status;

(c) Submits a statement(s) that a pre-examination search was made, listing the field of search by class and subclass, publication, Chemical Abstracts, foreign patents, etc. The pre-examination search must be directed to the invention as claimed in the application for which special status is requested. A search made by a foreign patent office satisfies this requirement;

(d) Submits one copy each of the references deemed most closely related to the subject matter encompassed by the claims if said references are not already of record; and

(e) Submits a detailed discussion of the references, which discussion points out, with the particularity required by 37 CFR 1.111 (b) and (c), how the claimed subject matter is patentable over the references.

In those instances where the request for this special status does not meet all the prerequisites set forth above, **applicant will be notified and the defects in the request will be stated**. The application will remain in the status of a new application awaiting action in its regular turn. In those instances where a request is defective in one or more respects, applicant will be given one opportunity to perfect the request in a renewed petition to make special. If perfected, the request will then be granted. If not perfected in the first renewed petition, any additional renewed petitions to make special may or may not be considered at the discretion of the Technology Center (TC) Special Program Examiner.

Applicants' submission meets all the criteria set out above. Accordingly, the petition is **GRANTED**.

The application file is being forwarded to the Examiner of Record for accelerated examination according to the procedures set forth in MPEP § 708.02, Section VIII.

Pinchus M. Laufer

Pinchus M. Laufer
Special Program Examiner
Technology Center 2100
Computer Architecture, Software and Information Security
571-272-3599

ds

UNITED STATES PATENT AND TRADEMARK OFFICE

COMMISSIONER FOR PATENTS
UNITED STATES PATENT AND TRADEMARK OFFICE
P.O. BOX 1450
ALEXANDRIA, VA 22313-1450
www.uspto.gov

MATTINGLY, STANGER, MALUR & BRUNDIDGE, P.C.
1800 DIAGONAL ROAD
SUITE 370
ALEXANDRIA, VA 22314

MAILED
JUL 0 5 2005
Technology Center 2100

In re Application of Kunihiko Nashimoto et al.	:	
Application No.: 10/795,997	:	DECISION ON PETITION
Filing Date: March 10, 2004	:	FOR ACCELERATED
For: STORAGE CONTROL SUBSYSTEM	:	EXAMINATION UNDER
FOR MANAGING LOGICAL VOLUMES	:	M.P.E.P. §708.02(VIII)
	:	

This is a decision on the petition filed June 6, 2005 and the supplemental petition filed June 13, 2005 under 37 CFR §1.102(d) and M.P.E.P. §708.02(VIII): Accelerated Examination, to make the above-identified application special.

The petition is **GRANTED**.

M.P.E.P. §708.02, Section VIII, which sets out the prerequisites for a grantable petition for Accelerated Examination under 37 CFR §1.102(d), states in relevant part:

> A new application (one which has not received any examination by the examiner) may be granted special status provided that applicant (and this term includes applicant's attorney or agent) complies with each of the following items:
>
> (A) Submits a petition to make special accompanied by the fee set forth in 37 CFR 1.17(h);
>
> (B) Presents all claims directed to a single invention, or if the Office determines that all the claims presented are not obviously directed to a single invention, will make an election without traverse as a prerequisite to the grant of special status. The election may be made by applicant at the time of filing the petition for special status. Should applicant fail to include an election with the original papers or petition and the Office determines that a requirement should be made, the established telephone restriction practice will be followed. If otherwise proper, examination on the merits will proceed on claims drawn to the elected invention. If applicant refuses to make an election without traverse, the application will not be further examined at that time. The petition will be denied on the ground that the claims are not directed to a single invention, and the application will await action in its regular turn. Divisional applications directed to the nonelected inventions will not automatically be given special status based on papers filed with the petition in the parent application. Each such application must meet on its own all requirements for the new special status;
>
> (C) Submits a statement(s) that a pre-examination search was made, listing the field of search by class and subclass, publication, Chemical Abstracts, foreign patents, etc. >The pre-examination

search must be directed to the invention as claimed in the application for which special status is requested.< A search made by a foreign patent office satisfies this requirement >if the claims in the corresponding foreign application are of the same or similar scope to the claims in the U.S. application for which special status is requested<;

(D) Submits one copy each of the references deemed most closely related to the subject matter encompassed by the claims if said references are not already of record; and

(E) Submits a detailed discussion of the references, which discussion points out, with the particularity required by 37 CFR 1.111 (b) and (c), how the claimed subject matter is patentable over the references.

Because the combined aubmissions meet the criteria set forth above, the petition to make special is **GRANTED**.

The application file is being forwarded to the Examiner for accelerated examination in accordance with M.P.E.P. §708.02, Section VIII. If the application is subsequently allowed, it will be given priority for printing. See M.P.E.P. §1309.

Pinchus M. Laufer
Special Programs Examiner
Technology Center 2100
Computer Architecture, Software, and Information Security
571-272-3599

UNITED STATES PATENT AND TRADEMARK OFFICE

Commissioner for Patents
United States Patent and Trademark Office
P.O. Box 1450
Alexandria, VA 22313-1450
www.uspto.gov

URIL GREENE
27 RIVER RIDGE TRAIL
ORMOND BEACH, FL 32174

COPY MAILED

AUG 23 2005

OFFICE OF PETITIONS

In re Application of
Greene
Application No. 10/796,001
Filed: March 10, 2004
For: Greene Mosquito Maze

Decision on Petition

This is a decision on the petition under 37 CFR 1.137(b), filed May 23, 2005, to revive the above-identified application.

The petition is **dismissed as moot.**

The Office of Initial Examination withdrew the holding of abandonment on July 6, 2005. Therefore, a petition under 37 CFR 1.137(b) is unnecessary.

A refund of the $750 petition fee will be scheduled.

Telephone inquiries may be directed to Petitions Attorney Steven Brantley at (571) 272-3203.

Charles Steven Brantley
Petitions Attorney
Office of Petitions

UNITED STATES PATENT AND TRADEMARK OFFICE

Commissioner for Patents
United States Patent and Trademark Office
P.O. Box 1450
Alexandria, VA 22313-1450
www.uspto.gov

COPY MAILED

JUN 04 2007

OFFICE OF PETITIONS

BROWDY AND NEIMARK, P.L.L.C.
624 NINTH STREET, NW
SUITE 300
WASHINGTON, DC 20001-5303

In re Application of Ko :
Application No. 10/796,008 : Decision on Petition
Filing Date: March 10, 2004 :
Attorney Docket No. KO53 :

This is a decision on the petition under 37 CFR 1.181, filed January 18, 2007, to withdraw the holding of abandonment.

The petition is **granted.**

A Notice of Non-Compliant Amendment was mailed March 29, 2006.

A reply was filed April 5, 2006.

The reply's header listed an incorrect application number and filing date. The title in the header also had the words "make" and "carbon" in an incorrect order. The header did list a correct attorney docket number and inventor name. The top of each page, excluding the first page, listed the correct application number.

The incorrect application number on the first page of the reply caused the Office to match the paper with an incorrect file.

A Notice of Abandonment was mailed November 20, 2006.

Petitioner requests the holding of abandonment be withdrawn.

At the discretion of the Office, a paper listing an incorrect application number may be considered timely and proper. The Office will accept papers as timely filed if the following criteria are met:

(1) The papers contained sufficient information for the Office to recognize they included an incorrect application number.
(2) The papers contained sufficient information for the Office to determine the correct application number.

The criteria above have been met.

The Notice of Abandonment is hereby vacated and the holding of abandonment withdrawn.

Technology Center Art Unit 1771 will be informed of the instant decision and the examiner will consider the amendment filed April 5, 2006, in due course.

Telephone inquiries regarding this communication should be directed to Petitions Attorney Steven Brantley at (571) 272-3203.

Charles Steven Brantley
Senior Petitions Attorney
Office of Petitions

UNITED STATES PATENT AND TRADEMARK OFFICE

COMMISSIONER FOR PATENTS
UNITED STATES PATENT AND TRADEMARK OFFICE
P.O. BOX 1450
ALEXANDRIA, VA 22313-1450
www.uspto.gov

MAIL

OCT 2 6 2004

DIRECTOR OFFICE
TECHNOLOGY CENTER 2600

OBLON, SPIVAK, MCCLELLAND, MAIER &
NEUSTADT, P.C.
1940 DUKE STREET
ALEXANDRIA, VA 22314

In re Application of
Keijiro Take
Application No. 10/796,011
Filed: March 10, 2004
For: A METHOD AND APPARATUS FOR ASSIGNING CODES

DECISION ON PETITION TO MAKE SPECIAL

This is a decision on the petition filed August 31, 2004 under Manual of Patent Examination Procedure §708.02, VIII requesting accelerated examination.

The petition under Manual of Patent Examination Procedure §708.02, VIII, must:
(1) be filed prior to receiving any examination by the examiner,
(2) be accompanied by the required fee- $130,
(3) the claims should be directed to a single invention (if it is determined that the claims pertain to more than one invention, then applicant will have to make an election without traverse or forfeit accelerated examination status),
(4) state that a pre-examination search was made, and fully discuss the search method employed, such as classes and subclasses searched, publications, Chemical abstracts, patents, etc. A search made by a foreign patent office satisfies this requirement,
(5) be accompanied by a copy of each of the references most closely related to the subject matter encompassed by the claims if said references are not already of record,
(6) fully discuss the references, pointing out with the particularity required by 37 C.F.R. §1.111 (b) and (c), how the claimed subject matter is patentable over the references.

The petitioner meets all the above-listed requirements. Accordingly, the petition is **GRANTED**.

The application will retain its special status throughout its entire prosecution, including any appeal to the Board of Patent Appeals and Interferences, subject only to diligent prosecution by the applicant. The application file is being forwarded to the examiner for appropriate action in due course.

Kenneth A. Wieder
Special Program Examiner
Technology Center 2600
Communications
571-272-2986

UNITED STATES PATENT AND TRADEMARK OFFICE

COMMISSIONER FOR PATENTS
UNITED STATES PATENT AND TRADEMARK OFFICE
P.O. BOX 1450
ALEXANDRIA, VA 22313-1450
www.uspto.gov

MAIL

OCT 26 2004

DIRECTOR OFFICE
TECHNOLOGY CENTER 2600

OBLON, SPIVAK, MCCLELLAND, MAIER &
NEUSTADT, P.C.
1940 DUKE STREET
ALEXANDRIA, VA 22314

In re Application of
Keijiro Take
Application No. 10/796,017
Filed: March 10, 2004
For: A METHOD AND APPARATUS FOR ASSIGNING CODES

DECISION ON PETITION
TO MAKE SPECIAL

This is a decision on the petition filed August 31, 2004 under Manual of Patent Examination Procedure §708.02, VIII requesting accelerated examination.

The petition under Manual of Patent Examination Procedure §708.02, VIII, must:
(1) be filed prior to receiving any examination by the examiner,
(2) be accompanied by the required fee- $130,
(3) the claims should be directed to a single invention (if it is determined that the claims pertain to more than one invention, then applicant will have to make an election without traverse or forfeit accelerated examination status),
(4) state that a pre-examination search was made, and fully discuss the search method employed, such as classes and subclasses searched, publications, Chemical abstracts, patents, etc. A search made by a foreign patent office satisfies this requirement,
(5) be accompanied by a copy of each of the references most closely related to the subject matter encompassed by the claims if said references are not already of record,
(6) fully discuss the references, pointing out with the particularity required by 37 C.F.R. §1.111 (b) and (c), how the claimed subject matter is patentable over the references.

The petitioner meets all the above-listed requirements. Accordingly, the petition is **GRANTED**.

The application will retain its special status throughout its entire prosecution, including any appeal to the Board of Patent Appeals and Interferences, subject only to diligent prosecution by the applicant. The application file is being forwarded to the examiner for appropriate action in due course.

Kenneth A. Wieder
Special Program Examiner
Technology Center 2600
Communications
571-272-2986

UNITED STATES PATENT AND TRADEMARK OFFICE

Commissioner for Patents
United States Patent and Trademark Office
P.O. Box 1450
Alexandria, VA 22313-1450
www.uspto.gov

GREENBLUM & BERNSTEIN, P.L.C.
1950 Roland Clarke Place
Reston, VA 20191

COPY MAILED

JUL 13 2004

OFFICE OF PETITIONS

In re Application of
Sylvain Cloarec, et al
Application No. 10/796,024
Filed: March 10, 2004
Attorney Docket No. P25006

NOTICE

This is a notice regarding your request for acceptance of a fee deficiency submission under 37 CFR 1.28. On September 1, 1998, the Court of Appeals for the Federal Circuit held that 37 CFR 1.28(c) is the sole provision governing the time for correction of the erroneous payment of the issue fee as a small entity. **See DH Technology v. Synergystex International, Inc. 154 F.3d 1333, 47 USPQ2d 1865 (Fed. Cir. Sept. 1, 1998).**

The Office no longer investigates or rejects original or reissue applications under 37 CFR 1.56. **1098 Off. Gaz. Pat. Office 502 (January 3, 1989)**. Therefore, nothing in this Notice is intended to imply that an investigation was done.

Your fee deficiency submission under 37 CFR 1.28 is hereby **ACCEPTED**.

Inquiries related to this communication should be directed to the Office of Petitions Staff at (703) 305-9285.

Sherry D. Brinkley
Petitions Examiner
Office of Petitions
Office of the Deputy Commissioner
for Patent Examination Policy

UNITED STATES PATENT AND TRADEMARK OFFICE

UNITED STATES DEPARTMENT OF COMMERCE
United States Patent and Trademark Office
Address: COMMISSIONER FOR PATENTS
P.O. Box 1450
Alexandria, Virginia 22313-1450
www.uspto.gov

APPLICATION NO.	FILING DATE	FIRST NAMED INVENTOR	ATTORNEY DOCKET NO.	CONFIRMATION NO.
10/796,032	03/10/2004	Shigeharu Ushiwata	1297.43489X00	2135

20457 7590 04/28/2008
ANTONELLI, TERRY, STOUT & KRAUS, LLP
1300 NORTH SEVENTEENTH STREET
SUITE 1800
ARLINGTON, VA 22209-3873

EXAMINER
FLORES SANCHEZ, OMAR

ART UNIT	PAPER NUMBER
3724	

MAIL DATE	DELIVERY MODE
04/28/2008	PAPER

Please find below and/or attached an Office communication concerning this application or proceeding.

The time period for reply, if any, is set in the attached communication.

UNITED STATES PATENT AND TRADEMARK OFFICE

Commissioner for Patents
United States Patent and Trademark Office
P.O. Box 1450
Alexandria, VA 22313-1450
www.uspto.gov

ANTONELLI, TERRY, STOUT & KRAUS, LLP
1300 NORTH SEVENTEENTH STREET
SUITE 1800
ARLINGTON VA 22209-3873

In re Application of: Ushiwata, Shigeharu et al Serial No.: 10/796,032 Filed: Mar. 10, 2004 Docket: 1297.43489X00 Title: MITER SAW HAVING LIGHT BEAM PROJECTION DEVICE	Decision on Petition to Withdraw Holding of Abandonment

This is a decision on the petition filed Oct. 12, 2007 requesting the holding of abandonment be withdrawn. This petition is being considered pursuant to 37 CFR § 1.181. No fee is required.

The petition is Granted.

The application was held abandoned for failure to timely and properly reply to the Notice of Allowance mailed Feb. 28, 2007. The Office action set a three (3) month period for the applicant to pay the issue fee. No response was received and no extensions of time under 37 CFR § 1.36(a) were requested. The notice of abandonment was mailed Oct. 3, 2007 for failure to pay the issue fee.

On Oct. 12, 2007, the current petition was filed. In support of the request, petitioner stated that the Notice of Allowance of Feb. 28, 2007 was never received at the correspondence address of record. The petition also included a statement that a search and review of the file jacket was made. Petitioner also provided a copy of the file jacket and docket records for such non-received Office action. Moreover, the non-receipt of Notice of Allowance was discussed with the examiner and a corrected Notice of Allowance was mailed on Jul. 12, 2007 with three months to pay the issue fee. A copy of the corrected fee transmittal (Form 85) clearly showing the new issue fee due date of Oct. 12, 2007 is provided. The issue fee was in fact paid on Oct. 12, 2007 as indicated in PALM.

As the petitioner has provided convincing evidence that a timely payment of issue fee to the Corrected Notice of Allowance was received on Oct. 12, 2007, there is no abandonment in fact.

Any inconvenience or delay caused to applicant is regretted.

In view of the above, the Notice of Abandonment mailed Oct. 3, 2007 is in error and is hereby vacated. The holding of abandonment is withdrawn. This application is being forwarded to the Office of Publication for issuance of a patent.

Petition Granted.

for

Frederick R. Schmidt, Director
Technology Center 3700

SPE RESPONSE FOR CERTIFICATE OF CORRECTION

Paper No.:20070330

DATE : March 06, 2008

TO SPE OF : ART UNIT 2163

SUBJECT : Request for Certificate of Correction on Patent No.: 7,228,311

A response is requested with respect to the accompanying request for a certificate of correction.

Please complete this form and return with file, within **7** days to:
Certificates of Correction Branch - ST (South Tower) 9A22
Palm location **7590** - Tel. No. (703) 305-8309

With respect to the change(s) requested, correcting Office and/or Applicant's errors, should the patent read as shown in the certificate of correction? No new matter should be introduced, nor should the scope or meaning of the claims be changed.

Thank You For Your Assistance **Certificates of Correction Branch**

The request for issuing the above-identified correction(s) is hereby:

Note your decision on the appropriated box.

☒ **Approved** All changes apply.

☐ **Approved in Part** Specify below which changes **do not** apply.

☐ **Denied** State the reasons for denial below.

Comments:

SPE: Tim Vo Tim Vo Art Unit 2168

SPE RESPONSE FOR CERTIFICATE OF CORRECTION

Paper No.: _____

DATE : 08/09/07

TO SPE OF : ART UNIT 2163

SUBJECT : Request for Certificate of Correction for Appl. No.: **10/796034** Patent No.: **7228311**

Please respond to this request for a certificate of correction within 7 days.

Please review the requested changes/corrections as shown in the **COCIN** document(s) in the IFW application image. No new matter should be introduced, nor should the scope or meaning of the claims be changed.

Please complete the response (see below) and forward the completed response to scanning using document code **COCX**.

Angela Green
Certificates of Correction Branch
703.308.9380 ext. 123

Thank You For Your Assistance

The request for issuing the above-identified correction(s) is hereby:
Note your decision on the appropriate box.

- ☑ **Approved** — **All** changes apply.
- ☐ **Approved in Part** — Specify below which changes **do not** apply.
- ☐ **Denied** — State the reasons for denial below.

Comments: _____

_____

_____

_____

_____

SPE — 2168 Art Unit

UNITED STATES PATENT AND TRADEMARK OFFICE

Commissioner for Patents
United States Patent and Trademark Office
P.O. Box 1450
Alexandria, VA 22313-1450
www.uspto.gov

MAIL

MAY 23 2006

DIRECTOR OFFICE
TECHNOLOGY CENTER 2600

OBLON, SPIVAK, MCCLELLAND, MAIER &
NEUSTADT, P.C.
1940 DUKE STREET
ALEXANDRIA, VA 22314

In re Application of
SHINOHARA, JUNICHI, ~~et al.~~
Application No. 10/796,036
Filed: March 10, 2004
For: **IMAGE INPUTTING APPARATUS**

DECISION ON PETITION
TO MAKE SPECIAL

This is a decision on the petition filed September 16, 2005 under Manual of Patent Examination Procedure §708.02, VIII requesting accelerated examination.

The petition under Manual of Patent Examination Procedure §708.02, VIII, must:
(1) be filed prior to receiving any examination by the examiner,
(2) be accompanied by the required fee- $130,
(3) the claims should be directed to a single invention (if it is determined that the claims pertain to more than one invention, then applicant will have to make an election without traverse or forfeit accelerated examination status),
(4) state that a pre-examination search was made, and fully discuss the search method employed, such as classes and subclasses searched, publications, Chemical abstracts, patents, etc. A search made by a foreign patent office satisfies this requirement,
(5) be accompanied by a copy of each of the references most closely related to the subject matter encompassed by the claims if said references are not already of record,
(6) fully discuss the references, pointing out with the particularity required by 37 C.F.R. §1.111 (b) and (c), how the claimed subject matter is patentable over the references.

The petitioner meets all the above-listed requirements. Accordingly, the petition is **GRANTED**.

The application will retain its special status throughout its entire prosecution, including any appeal to the Board of Patent Appeals and Interferences, subject only to diligent prosecution by the applicant. The application file is being forwarded to the examiner for appropriate action in due course.

Kenneth A. Wieder
Special Program Examiner
Technology Center 2600
Communications

UNITED STATES PATENT AND TRADEMARK OFFICE

Commissioner for Patents
United States Patent and Trademark Office
P.O. Box 1450
Alexandria, VA 22313-1450
www.uspto.gov

MAIL

MAY 23 2005

DIRECTOR OFFICE
TECHNOLOGY CENTER 2600

OBLON, SPIVAK, MCCLELLAND, MAIER & NEUSTADT, P.C.
1940 DUKE STREET
ALEXANDRIA VA 22314

In re Application of
SHINOHARA, JUNICHI, et al.
Application No. 10/796,036
Filed: March 10, 2004
For: **IMAGE INPUTTING APPARATUS**

DECISION ON PETITION
TO MAKE SPECIAL

This is a decision on the petition filed September 16, 2005 under Manual of Patent Examination Procedure §708.02, VIII requesting accelerated examination.

The petition under Manual of Patent Examination Procedure §708.02, VIII, must:
(1) be filed prior to receiving any examination by the examiner,
(2) be accompanied by the required fee- $130,
(3) the claims should be directed to a single invention (if it is determined that the claims pertain to more than one invention, then applicant will have to make an election without traverse or forfeit accelerated examination status),
(4) state that a pre-examination search was made, and fully discuss the search method employed, such as classes and subclasses searched, publications, Chemical abstracts, patents, etc. A search made by a foreign patent office satisfies this requirement,
(5) be accompanied by a copy of each of the references most closely related to the subject matter encompassed by the claims if said references are not already of record,
(6) fully discuss the references, pointing out with the particularity required by 37 C.F.R. §1.111 (b) and (c), how the claimed subject matter is patentable over the references.

The petitioner meets all the above-listed requirements. Accordingly, the petition is **GRANTED**.

The application will retain its special status throughout its entire prosecution, including any appeal to the Board of Patent Appeals and Interferences, subject only to diligent prosecution by the applicant. The application file is being forwarded to the examiner for appropriate action in due course.

Kenneth A. Wieder
Special Program Examiner
Technology Center 2600
Communications

UNITED STATES PATENT AND TRADEMARK OFFICE

Commissioner for Patents
United States Patent and Trademark Office
P.O. Box 1450
Alexandria, VA 22313-1450
www.uspto.gov

Paper No.

Arther J. Steiner
MCDERMOTT, WILL & EMERY
600 13th Street, N.W.
Washington, DC 20005-3096

MAY 25 2005

In re Application of:
Takemi Hasegawa, et al.
Serial No.: 10/796,047
Filed: March 10, 2004
Attorney Docket No.: 50212-575

NOTICE OF WITHDRAWAL FROM ISSUE UNDER 37 CFR § 1.313

The purpose of this communication is to inform you that the above-identified application is being withdrawn from issue pursuant to 37 CFR § 1.313.

The above-identified application is hereby withdrawn from issue. The Notice of Allowance and Issue Fee Due and the Notice of Allowability mailed April 22, 2005 are hereby vacated.

The application is being withdrawn to permit reopening of prosecution. The reasons therefor will be communicated to you by the examiner.

Upon receipt of a new Notice of Allowance and Issue Fee Due, applicant may request that any previously submitted issue fee be applied toward payment of the issue fee in the amount identified on the new Notice of Allowance and Issue Fee Due. If the application is abandoned, applicant may request either a refund, or a credit to a Deposit Account.

Telephone inquires should be directed to T. C. Patel at (571) 272-2098.

Richard K. Seidel, Director
Technology Center 2800
Semiconductors, Electrical and Optical
Systems and Components

UNITED STATES PATENT AND TRADEMARK OFFICE

Commissioner for Patents
United States Patent and Trademark Office
P.O. Box 1450
Alexandria, VA 22313-1450
www.uspto.gov

MAIL

APR - 2 2007

DIRECTOR'S OFFICE
TECHNOLOGY CENTER 2600

STAAS & HALSEY LLP
SUITE 700
1201 NEW YORK AVENUE, N.W.
WASHINGTON DC 20005

In re Application of	:	
Shinji Kikuchi	:	DECISION ON REQUEST TO
Application No. 10/796059	:	PARTICIPATE IN PATENT
Filed: March 10, 2004	:	PROSECUTION HIGHWAY
Attorney Docket No. 826.1930	:	PILOT PROGRAM AND PETITION
	:	TO MAKE SPECIAL UNDER
	:	37 CFR 1.102(d)

This is a decision on the request to participate in the Patent Prosecution Highway (PPH) pilot program and the petition under 37 CFR 1.102(d), filed March 2, 2007, to make the above-identified application special.

The request and petition are **GRANTED**.

A grantable request to participate in the PPH pilot program and petition to make special require:

(1) The U.S. application must validly claim priority under 35 U.S.C. 119(a) to one or more applications filed in the JPO;
(2) Applicant must submit a copy of the allowable/patentable claim(s) from the JPO application(s) along with an English translation thereof and a statement that the English translation is accurate;
(3) All the claims in the U.S. application must sufficiently correspond or be amended to sufficiently correspond to the allowable/patentable claim(s) in the JPO application(s);
(4) Examination of the U.S. application has not begun;
(5) Applicant must submit a copy of all the office actions from each of the JPO application(s) containing the allowable/patentable claim(s) along with an English translation thereof and a statement that the English translation is accurate;
(6) Applicant must submit an IDS listing the documents cited by the JPO examiner in the JPO office action along with copies of documents except U.S. patents or U.S. patent application publications; and
(7) The required petition fee under 37 CFR 1.17(h).

The request to participate in the PPH pilot program and petition comply with the above requirements. Accordingly, the above-identified application has been accorded "special" status.

Telephone inquiries concerning this decision should be directed to John Peng at 571-272-7272.

All other inquiries concerning the examination or status of the application should be directed to Patent Application Information Retrieval (PAIR) system.

The application is being forwarded to the examiner for action on the merits commensurate with this decision.

John Peng
TC 2600
Quality Assurance Specialist

UNITED STATES PATENT AND TRADEMARK OFFICE

COMMISSIONER FOR PATENTS
UNITED STATES PATENT AND TRADEMARK OFFICE
P.O. BOX 1450
ALEXANDRIA, VA 22313-1450
www.uspto.gov

MAIL

OCT 26 2004

DIRECTOR OFFICE
TECHNOLOGY CENTER 2600

OBLON, SPIVAK, MCCLELLAND, MAIER &
NEUSTADT, P.C.
1940 DUKE STREET
ALEXANDRIA, VA 22314

In re Application of
Keijiro Take
Application No. 10/796,090
Filed: March 10, 2004
For: A METHOD AND APPARATUS FOR ASSIGNING CODES

DECISION ON PETITION TO MAKE SPECIAL

This is a decision on the petition filed August 31, 2004 under Manual of Patent Examination Procedure §708.02, VIII requesting accelerated examination.

The petition under Manual of Patent Examination Procedure §708.02, VIII, must:
(1) be filed prior to receiving any examination by the examiner,
(2) be accompanied by the required fee- $130,
(3) the claims should be directed to a single invention (if it is determined that the claims pertain to more than one invention, then applicant will have to make an election without traverse or forfeit accelerated examination status),
(4) state that a pre-examination search was made, and fully discuss the search method employed, such as classes and subclasses searched, publications, Chemical abstracts, patents, etc. A search made by a foreign patent office satisfies this requirement,
(5) be accompanied by a copy of each of the references most closely related to the subject matter encompassed by the claims if said references are not already of record,
(6) fully discuss the references, pointing out with the particularity required by 37 C.F.R. §1.111 (b) and (c), how the claimed subject matter is patentable over the references.

The petitioner meets all the above-listed requirements. Accordingly, the petition is **GRANTED**.

The application will retain its special status throughout its entire prosecution, including any appeal to the Board of Patent Appeals and Interferences, subject only to diligent prosecution by the applicant. The application file is being forwarded to the examiner for appropriate action in due course.

Kenneth A. Wieder
Special Program Examiner
Technology Center 2600
Communications
571-272-2986

SPE RESPONSE FOR CERTIFICATE OF CORRECTION

Paper No.: X

DATE : March 28, 2008

TO SPE OF : ART UNIT 1795

SUBJECT : Request for Certificate of Correction for Appl. No.: 10/796091 Patent No.: 7252917 B2

A response is requested with respect to a request for a certificate of correction.

With respect to the change(s) requested to correct Office and/or Applicant's errors, should the patent read as shown in the certificate of correction attached herewith or the COCIN document(s), in IFW images for the above-identified patented application? No new matter should be introduced, nor should the scope or meaning of the claims be changed.

If the response is for an IFW, within 7 days, please complete and forward the response, to the employee (named below) via scanning into application images using document code COCX.

DO NOT SENT TO ATTORNEY

If the response is for a paper file wrapper, please complete the response and forward the response with the paper file wrapper, to the employee (named below), within 7 days, to:

Certificates of Correction Branch (CofC)
South Tower - 9A22
Palm Location 7580

[redacted]

LAMONTE NEWSOME
Certificates of Correction Branch
703-308-9390 ext. 112

Thank You For Your Assistance

The request for issuing the above-identified correction(s) is hereby:
Note your decision on the appropriate box.

- [x] **Approved** — All changes apply.
- [ ] **Approved in Part** — Specify below which changes do not apply.
- [ ] **Denied** — State the reasons for denial below.

Comments: JG

SPE

1795
Art Unit

PAGE 4/4 * RCVD AT 4/2/2008 1:30:33 PM [Eastern Daylight Time] * SVR:USPTO-EFXRF-6/24 * DNIS:2709990 * CSID:703 306 3186 * DURATION (mm-ss):01-36

UNITED STATES PATENT AND TRADEMARK OFFICE

COMMISSIONER FOR PATENTS
UNITED STATES PATENT AND TRADEMARK OFFICE
P.O. BOX 1450
ALEXANDRIA, VA 22313-1450
www.uspto.gov

OBLON, SPIVAK, MCCLELLAN, MAIER &
NEUSTADT, P.C.
1940 DUKE STREET
ALEXANDRIA, VA 22314

MAIL

OCT 26 2004

DIRECTOR OFFICE
TECHNOLOGY CENTER 2600

In re Application of
Keijiro Take
Application No. 10/796,092
Filed: March 10, 2004
For: A METHOD AND APPARATUS FOR ASSIGNING CODES

DECISION ON PETITION
TO MAKE SPECIAL

This is a decision on the petition filed August 31, 2004 under Manual of Patent Examination Procedure §708.02, VIII requesting accelerated examination.

The petition under Manual of Patent Examination Procedure §708.02, VIII, must:
(1) be filed prior to receiving any examination by the examiner,
(2) be accompanied by the required fee- $130,
(3) the claims should be directed to a single invention (if it is determined that the claims pertain to more than one invention, then applicant will have to make an election without traverse or forfeit accelerated examination status),
(4) state that a pre-examination search was made, and fully discuss the search method employed, such as classes and subclasses searched, publications, Chemical abstracts, patents, etc. A search made by a foreign patent office satisfies this requirement,
(5) be accompanied by a copy of each of the references most closely related to the subject matter encompassed by the claims if said references are not already of record,
(6) fully discuss the references, pointing out with the particularity required by 37 C.F.R. §1.111 (b) and (c), how the claimed subject matter is patentable over the references.

The petitioner meets all the above-listed requirements. Accordingly, the petition is **GRANTED**.

The application will retain its special status throughout its entire prosecution, including any appeal to the Board of Patent Appeals and Interferences, subject only to diligent prosecution by the applicant. The application file is being forwarded to the examiner for appropriate action in due course.

Kenneth A. Wieder
Special Program Examiner
Technology Center 2600
Communications

UNITED STATES PATENT AND TRADEMARK OFFICE

COMMISSIONER FOR PATENTS
UNITED STATES PATENT AND TRADEMARK OFFICE
P.O. BOX 1450
ALEXANDRIA, VA 22313-1450
www.uspto.gov

MAIL

SEP 2 2 2004

DIRECTOR OFFICE
TECHNOLOGY CENTER 2600

OBLON, SPIVAK, MCCLELLAND, MAIER & NEUSTADT, P.C.
1940 DUKE STREET
ALEXANDRIA VA 22314

In re Application of :
Keijiro TAKE :
Application No. 10/796,094 :
Filed: March 10, 2004 :
For: A METHOD AND APPARATUS FOR ASSIGNING CODES :

DECISION ON PETITION TO MAKE SPECIAL

This is a decision on the petition filed August 31, 2004 under Manual of Patent Examination Procedure §708.02, VIII requesting accelerated examination.

The petition under Manual of Patent Examination Procedure §708.02, VIII, must:
(1) be filed prior to receiving any examination by the examiner,
(2) be accompanied by the required fee- $130,
(3) the claims should be directed to a single invention (if it is determined that the claims pertain to more than one invention, then applicant will have to make an election without traverse or forfeit accelerated examination status),
(4) state that a pre-examination search was made, and fully discuss the search method employed, such as classes and subclasses searched, publications, Chemical abstracts, patents, etc. A search made by a foreign patent office satisfies this requirement,
(5) be accompanied by a copy of each of the references most closely related to the subject matter encompassed by the claims if said references are not already of record,
(6) fully discuss the references, pointing out with the particularity required by 37 C.F.R. §1.111 (b) and (c), how the claimed subject matter is patentable over the references.
For applications in the Image File Wrapper (IFW) system, no copies of U.S. Patents are required.

The petitioner meets all the above-listed requirements. Accordingly, the petition is **GRANTED**.

The application will retain its special status throughout its entire prosecution, including any appeal to the Board of Patent Appeals and Interferences, subject only to diligent prosecution by the applicant.

Kenneth A. Wieder
Special Program Examiner
Technology Center 2600
Communications

SPE RESPONSE FOR CERTIFICATE OF CORRECTION

Paper No.: X

DATE : **June 02, 2008**

TO SPE OF : ART UNIT **2879**

SUBJECT : Request for Certificate of Correction for Appl. No.: **10/796102** Patent No.: **7242136 B2**

A response is requested with respect to a request for a certificate of correction.

With respect to the change(s) requested to correct Office and/or Applicant's errors, should the patent read as shown in the certificate of correction attached herewith or the COCIN document(s), in IFW images for the above-identified patented application? No new matter should be introduced, nor should the scope or meaning of the claims be changed.

If the response is for an IFW, within **7** days, please complete and forward the response, to the employee (named below) via scanning into application images, using document code **COCX**.

DO NOT SENT TO ATTORNEY

If the response is for a paper file wrapper, please complete the response and forward the response with the paper file wrapper, to the employee (named below), within **7** days, to:

Certificates of Correction Branch (CofC)
South Tower - 9A22
Palm Location 7580

You can fax the Directors/SPE response to 571-270-9990

LAMONTE NEWSOME
Certificates of Correction Branch
703-308-9390 ext. 112

Thank You For Your Assistance

The request for issuing the above-identified correction(s) is hereby:

Note your decision on the appropriate box.

X **Approved** **All** changes apply.

☐ **Approved in Part** Specify below which changes **do not** apply.

☐ **Denied** State the reasons for denial below.

Comments: _____

_____

/AP/ 2889

Examiner Ashok Patel **(For SPE Toan Minh-Ton)** **Art Unit**

UNITED STATES PATENT AND TRADEMARK OFFICE

CERTIFICATE OF CORRECTION

PATENT NO. : 7242136 B2
APPLICATION NO. : 10/796,102
ISSUE DATE : 07/10/07
INVENTOR(S) : KIM, YOUNG SUNG

It is certified that error appears in the above-identified patent and that said Letters Patent is hereby corrected as shown below:

The Title Page, showing an illustrative figure, should be deleted and substitute therefor the attached Title Page.

Delete drawings sheets 6 of 9, 7 of 9 and 9 of 9 and substitute therefor the drawing sheets, consisting of figs. 8, 9 and 11 as shown on the attached page.

US007242136B2

(12) **United States Patent**
Kim et al.

(10) **Patent No.: US 7,242,136 B2**
(45) **Date of Patent: Jul. 10, 2007**

(54) **FRONT FILTER, AND PLASMA DISPLAY APPARATUS HAVING THE SAME**

(75) Inventors: **Young Sung Kim**, Yongin-si (KR); **Kyung Ku Kim**, Seoul (KR); **Hong Rae Cha**, Seoul (KR); **Myeong Soo Chang**, Oeiwhang-si (KR); **Byung Gil Ryu**, Seoul (KR); **Eun Ho Yoo**, Goyang-si (KR)

(73) Assignee: **LG Electronics Inc.**, Seoul (KR)

(*) Notice: Subject to any disclaimer, the term of this patent is extended or adjusted under 35 U.S.C. 154(b) by 334 days.

(21) Appl. No.: **10/796,102**

(22) Filed: **Mar. 10, 2004**

(65) **Prior Publication Data**

US 2004/0178729 A1 Sep. 16, 2004

(30) **Foreign Application Priority Data**

Mar. 11, 2003 (KR) 10-2003-0015174

(51) **Int. Cl.**
G06F 3/033 (2006.01)
G09F 9/00 (2006.01)
H01J 61/40 (2006.01)

(52) **U.S. Cl.** **313/112**; 313/582; 359/885; 359/577

(58) **Field of Classification Search** 345/173–178; 178/18.01–20.06
See application file for complete search history.

(56) **References Cited**

U.S. PATENT DOCUMENTS

4,794,634	A *	12/1988	Torihata et al.	379/93.19
6,061,177	A *	5/2000	Fujimoto	359/443
6,087,012	A *	7/2000	Varaprasad et al.	428/428
6,215,477	B1 *	4/2001	Morrison et al.	345/173
6,876,355	B1 *	4/2005	Ahn et al.	345/173
6,887,631	B2 *	5/2005	Kiguchi et al.	430/7
6,933,086	B2 *	8/2005	Sakurada	430/7
7,053,886	B2 *	5/2006	Shin	345/173
2003/0122801	A1 *	7/2003	Yu	345/173
2005/0062410	A1 *	3/2005	Bell et al.	313/506

FOREIGN PATENT DOCUMENTS

JP 10-163671 * 6/1998

* cited by examiner

Primary Examiner—Ashok Patel
(74) *Attorney, Agent, or Firm*—Ked & Associates, LLP.

(57) **ABSTRACT**

The present invention relates to a front filter having a touch screen, and a plasma display apparatus having the same. The front filter installed on a front surface of a panel of a plasma display apparatus, the front filter including: a touch screen for generating a coordinate signal with respect to a touch point.

22 Claims, 9 Drawing Sheets

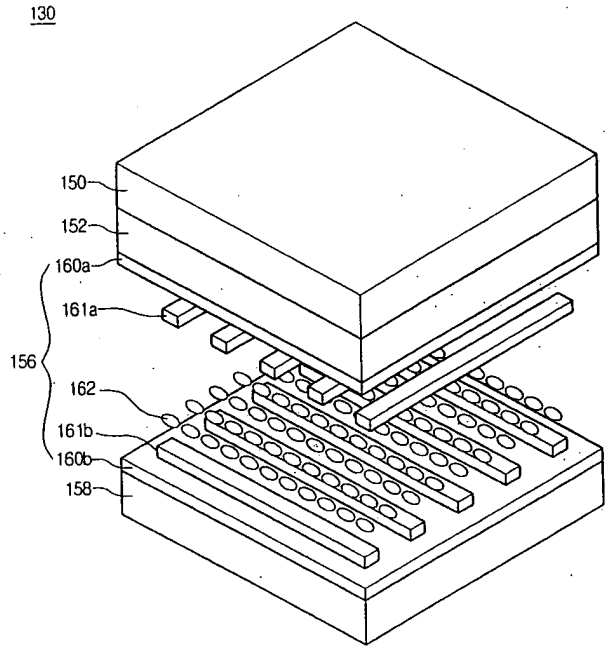

Fig. 8

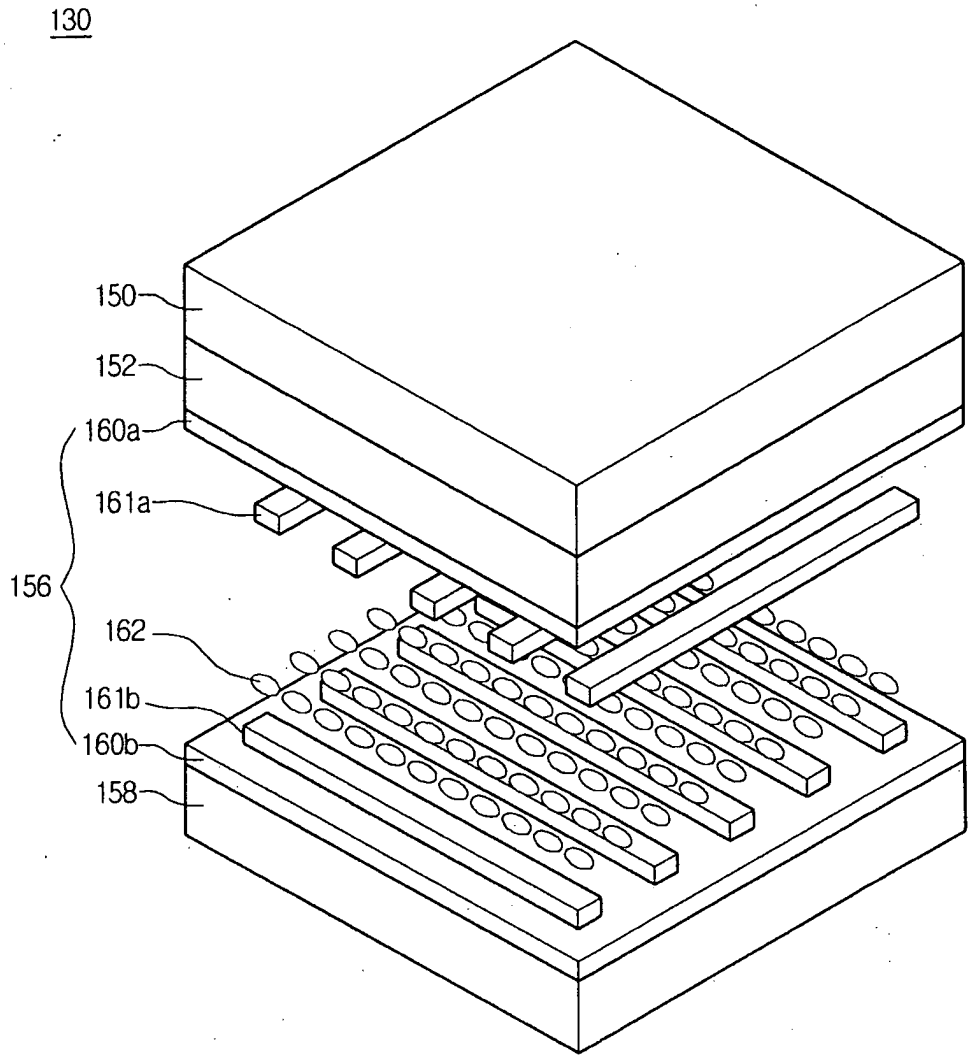

Fig. 9

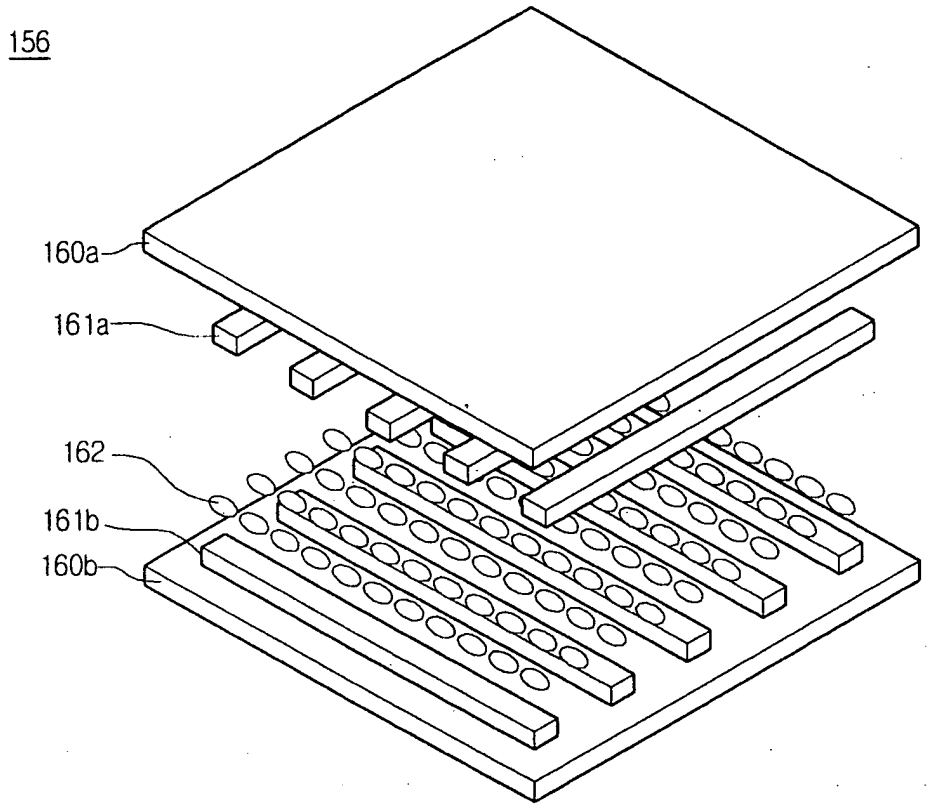

Fig.11

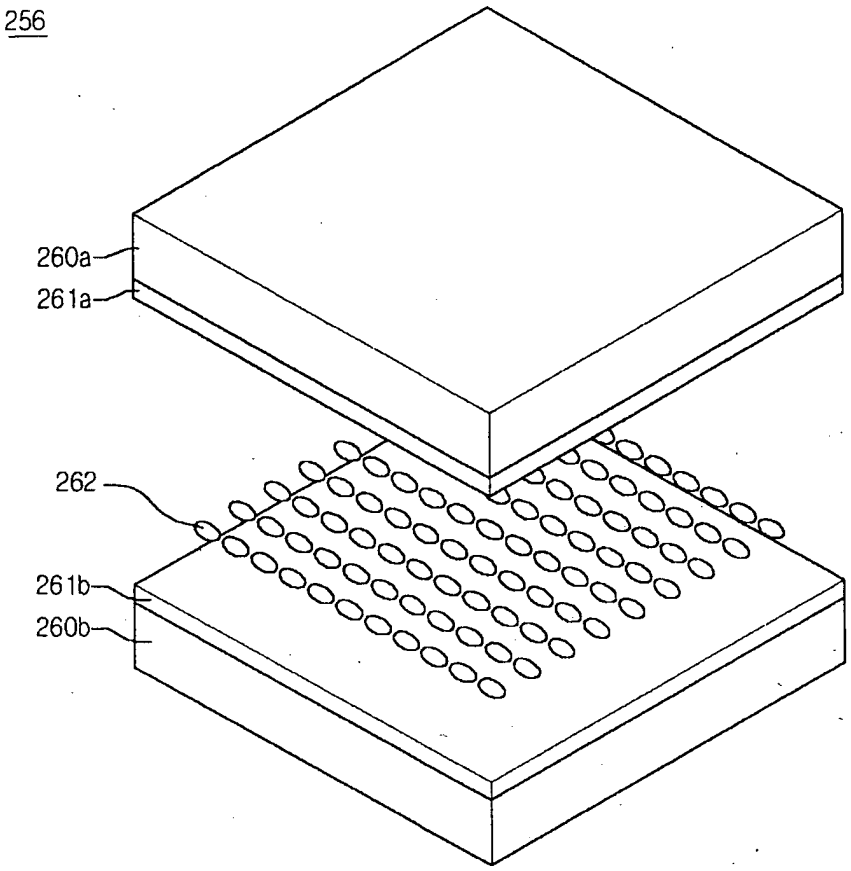

UNITED STATES PATENT AND TRADEMARK OFFICE

UNITED STATES DEPARTMENT OF COMMERCE
United States Patent and Trademark Office
Address: COMMISSIONER FOR PATENTS
P.O. Box 1450
Alexandria, Virginia 22313-1450
www.uspto.gov

DICKSTEIN SHAPIRO LLP
1825 EYE STREET NW
Washington, DC 20006-5403

Mail Date: 04/21/2010

Applicant	: Dean A. Klein	: DECISION ON REQUEST FOR
Patent Number	: 7583551	: RECALCULATION of PATENT
Issue Date	: 09/01/2009	: TERM ADJUSTMENT IN VIEW
Appliction No	: 10/796,111	: OF WYETH AND NOTICE OF INTENT TO
Filed	: 03/10/2004	: ISSUE CERTIFICATE OF CORRECTION
		:

The Request for Recalculation is **GRANTED** to the extent indicated.

The patent term adjustment has been determined to be **876** days. The USPTO will *sua sponte* issue a certificate of correction reflecting the amount of PTA days determined by the recalculation.

Prior to the issuance of the certificate of correction, the USPTO will afford patentee an opportunity to be heard and request reconsideration. Accordingly, patentee has **one month or thirty (30) days**, whichever is longer, to file a request for reconsideration of this patent term adjustment calculation. See 35 U.S.C. 154(b)(3)(B)(ii) and 37 CFR 1.322(a)(4). No extensions of time will be granted under 37 CFR 1.136.

Patentee should use document code PET.OP if electronically filing a request for reconsideration of this patent term adjustment calculation. The patentee must also include the information required by 37 CFR 1.705(b)(2) and the fee required by 37 CFR 1.18(e). If patentee does not file a timely request for reconsideration of this patent term adjustment calculation including the information required by 37 CFR 1.705(b)(2) and the fee required by 37 CFR 1.18(e), the USPTO will issue a certificate of correction reflecting the PTA determination noted above.

Patentee should be aware that in order to preserve the right to review in the United States District Court for the District of Columbia of the USPTO patent term adjustment determination, patentee must ensure that he or she also take the steps required under 35 U.S.C. 154(b)(4)(A) in a timely manner. Nothing in the request for recalculation should be construed as providing an alternative time frame for commencing a civil action under 35 U.S.C. 154(b)(4)(A).

Any questions concerning this decision should be directed to the Office of Patent Legal Administration at 571-272-7702.

SPE D. W4

SPE RESPONSE FOR CERTIFICATE OF CORRECTION

Paper No.: _____

DATE : 5/11/06

TO SPE OF : ART UNIT 2612

SUBJECT : Request for Certificate of Correction for Appl. No.: 10/796,129 Patent No.: 7034667

Please respond to this request for a certificate of correction within 7 days.

Please review the requested changes/corrections as shown in the **COCIN** document(s) in the IFW application image. No new matter should be introduced, nor should the scope or meaning of the claims be changed.

Please complete the response (see below) and forward the completed response to scanning using document code **COCX**.

Lamonte M. Newsome
Certificates of Correction Branch
703-308-9390 ext. 112

Thank You For Your Assistance

The request for issuing the above-identified correction(s) is hereby:
Note your decision on the appropriate box.

- ☐ **Approved** — **All** changes apply.
- ☑ **Approved in Part** — Specify below which changes **do not** apply.
- ☐ **Denied** — State the reasons for denial below.

Comments: On the Title Page, in the left column, line 2 request to change "340/433" to -- 340/130 -- is not approved because 340/433 is the updated classification for this particular area where 340/130 no longer exist.

SPE

2612
Art Unit

SPE D. W4

SPE RESPONSE FOR CERTIFICATE OF CORRECTION

Paper No.: _____

DATE : 5/11/04

TO SPE OF : ART UNIT 2612

SUBJECT : Request for Certificate of Correction for Appl. No.: 10/796,129 Patent No.: 7034667

Please respond to this request for a certificate of correction within 7 days.

Please review the requested changes/corrections as shown in the **COCIN** document(s) in the IFW application image. No new matter should be introduced, nor should the scope or meaning of the claims be changed.

Please complete the response (see below) and forward the completed response to scanning using document code **COCX**.

Lamonte M. Newsome
Certificates of Correction Branch
703-308-9390 ext. 112

Thank You For Your Assistance

The request for issuing the above-identified correction(s) is hereby:
Note your decision on the appropriate box.

- ☐ **Approved** — **All** changes apply.
- ☑ **Approved in Part** — Specify below which changes **do not** apply.
- ☐ **Denied** — State the reasons for denial below.

Comments: On the Title Page, in the left column, line 2 request to change "340/433" to -- 340/130-- is not approved because 340/433 is the updated classification for this particular area where 340/130 no longer exist.

SPE

2612
Art Unit

UNITED STATES PATENT AND TRADEMARK OFFICE

Commissioner for Patents
United States Patent and Trademark Office
P.O. Box 1450
Alexandria, VA 22313-1450
www.uspto.gov

MAILED

MAY 10 2010

OFFICE OF PETITIONS

KED & ASSOCIATES, LLP
P.O. Box 221200
Chantilly VA 20153-1200

In re Patent No. 7,602,753 :
Issue Date: 10/13/2009 :
Application No. 10/796,159 : ON PETITION
Filed: 03/10/2004 :
Attorney Docket No. K-0613 :

This is a decision on the petition under 37 CFR 1.183 filed December 2, 2009, which is properly being treated as a petition under 37 CFR 3.81(b).

Patentees request correction of the front page of the Letters Patent to include the correct assignee data via Certificate of Correction. With the present request, patentees submitted a completed Certificate of Correction form and paid the processing fee set forth in § 1.17(i). Furthermore, it is noted that the assignment was recorded with the USPTO prior to the issuance of the patent.

In view of the above, the request under 37 CFR 3.81(b) to correct the assignee data is GRANTED.

The required $100.00 certificate of correction fee set forth in § 1.20(a) will be charged to the Deposit Account as authorized.

Telephone inquiries concerning this decision may be directed to the undersigned at (571) 272-3211. Inquiries regarding the issuance of a certificate of correction should be directed to the Certificate of Correction Branch at (571) 272-4200.

The Certificates of Correction Branch will be notified of this decision granting the petition under 37 CFR 3.81(b) and directing issuance of the requested Certificate of Correction as to the assignment information.

C. T. Donnell

Christina Tartera Donnell
Senior Petitions Attorney
Office of Petitions

Commissioner for Patents
United States Patent and Trademark Office
P.O. Box 1450
Alexandria, VA 22313-1450
www.uspto.gov

OCT 2 1 2009

KC Sagun
MILLEN, WHITE, ZELANO & BRANIGAN, P.C.
2200 CLARENDON BLVD.
SUITE 1400
ARLINGTON VA 22201

In re Application of	:
Siemeister et al	:
Serial No.: 10/796174	:DECISION ON PETITION
Filed: 10 March 2004	:
Attorney Docket No.: SCH-1815-C1	:

This letter is in response to the Petition filed under 37 C.F.R. 1.144 filed on 17 August 2009 requesting review and withdrawal of restriction requirement mailed 20 April 2006.

BACKGROUND

This application was filed as a national application under 35 U.S.C. 111 and as such is subject to US restriction practice.

On 20 April 2006, the examiner mailed a restriction requirement in which claims 1-22 were divided into 3 groups, as follows;

> Group I, claims 1-7 and 9-11 drawn to a composition comprising two specific compounds.
> Group II, claim 8, drawn to a composition comprising one compound.
> Group III, claims 22 drawn to a method of using the composition for treatment.

Group I and II were then further divided into two groups depending upon whether the compound inhibited or activated VEGF/VEGF and/or receptor systems. The examiner required an election of species amongst

i) a small molecular weight substance
ii) polynucleotides
iii) an oligonucleotide
iv) antisense oligonucleotide
v) an oligopeptide
vi) a recombinant protein
vii) an antibody
viii) a single chain antibody
ix) a conjugate or fusion protein of any one of the above

The examiner also required an election of one or two compounds from the following list:

a) any one (1) of SEQ ID NOS: 1-60 (claims 12 and 13)

b) (4-Chlorophenyl)[4-(4-pyridylmethyl)-phthalazin-1-yl]ammonium hydrogen succinate (or another specific small molecular weight molecule, which must be identified by name) (claims 15-18)

c) sTie2 (claims 14 and 17-21)

d) mAB 4301-42-35 (claims 14, 17-20)

e) scFv-tTF (claims 14, 17-21)

f) L19 scFv-tTF conjugate (claims 14, 17, 18)

The examiner reasoned that Groups I and II were unrelated. The examiner reasoned that the product and process Groups were distinct because cancer could be treated by radiation. The examiner also required an election of a single disease encompassed by Claim 22.

On 18 July 2006, applicant elected, with traverse, Group I and the species of small molecular weight substances that inhibit or interfere with VEGF/VEGF and/or receptor systems.

On 2 November 2006, the examiner considered the traversal. The examiner maintained the restriction requirement, however, removed (which is being interpreted here as withdrew) the election of species requirements for the purposes of examining all pending claim. The examiner incorrectly indicated that Claims 8 and 12-22 were cancelled. (Instead, claims 8 and 12-22 were withdrawn from consideration as being directed to non-elected subject matter.) Claims 1-7 and 9-11 were rejected as follows:

Claims 1-7 were rejected under 35 USC 112, first paragraph for lack of adequate written description.

Claims 1-7 and 9-11 were rejected under 35 USC 103(a) as being obvious over Thorpe.

On 2 May 2007, applicant filed a response to the Office action.

On 20 September 2007, in a final Office action, claims 8 and 12-22 were withdrawn from consideration as being directed to non-elected inventions. Claims 1-2, 4-7 and 9-11 were rejected under 35 USC 103(a) as being obvious over Thorpe.

On 20 March 2008, applicants filed a request for continued examination along with an amendment to the claims, which added new claims 23-24. It is noted that claim 24 was directed to elected Group I and is limited to the elected species.

> **Claim 23. (New)** A method of treating a tumor or tumor metastasis in a subject, comprising administering into said subject an effective amount of the pharmaceutical composition of claim 1.
>
> **Claim 24. (New)** The pharmaceutical composition of claim 1 wherein compound I is 4-Chlorophenyl)[4-(4-pyridylmethyl)-phthalazin-1-yl]ammonium hydrogen succinate and compound II is sTie2.

On 10 June 2008, the examiner mailed a non-final Office action in which claims 8 and 12-24 were withdrawn from consideration as being directed to non-elected inventions. Claims 1-2, 4-7 and 9-11 were rejected under 35 USC 103(a) as being obvious over Thorpe.

On 10 December 2008, applicant filed a response to the Office action.

On 17 March 2009, the examiner mailed a final Office action in which claims 8 and 12-24 were withdrawn from consideration as being directed to non-elected inventions. Claims 1-2, 4-7 and 9-11 were rejected under 35 USC 103(a) as being obvious over Thorpe.

On 9 February 2009, applicants filed this petition under consideration along with a Notice of Appeal.

DISCUSSION

The petition and file history have been carefully considered.

Before turning to the merits of the petition, it is noted that the inventions of Group I and II are not unrelated. Rather the compositions of Claim 8 (Group II) are generic to and thereby encompasses the compositions of Group I.

MPEP 806.03 states:

> Where the claims of an application define the same essential characteristics of a single disclosed embodiment of an invention, restriction therebetween should never be required. This is because the claims are not directed to distinct inventions; rather they are different definitions of the same disclosed subject matter, varying in breadth or scope of definition.

Moreover, MPEP 806 states:

C) Where inventions are related as disclosed but are not distinct as claimed, restriction is never proper.

For these reasons, the restriction required between Group I and II was improper because the groups are not distinct.

The petition requests withdrawal of the restriction requirement for claims 14-18 and 24. Claims 14-18 and 24, along with claims 12-13 and 19-21 depend from independent Claim 1 and differs in scope by reciting varying subgenera or species encompassed by the generic Claim 1. Because the election of species requirements were withdrawn in the first office action on the merits, these claims must be examined with the generic claims.

Moreover, it is noted that several of the dependent claims which had been withdrawn from examination actually recite the elected species. This is improper. The examiner cannot refuse to examine applicants elected invention.

Finally, the petition requests that withdrawn claims 22-23 be rejoined for examination.

Withdrawn claims 22-23 are directed to method of using the elected product. MPEP 821.04(b) provides guidance that when all claims to the elected product are in condition for allowance, process claims which depend from or otherwise require all the limitations of a allowable product be considered fro rejoinder. Because the product claims are currently under rejection, any request for rejoinder at this time is premature.

For these reasons, the Office action mailed 7 November 2008 was incomplete.

DECISION

The petition is **GRANTED-IN-PART** for the reasons set forth above.

The finality of the Office action mailed November 2008 has been withdrawn.

The restriction requirement between Group I and II has been withdrawn.

The restriction requirement between the products (Groups I/II) and processes (Group III) is maintained, because not all claims to the elected product are in condition for allowance.

It is noted that the election of species requirements were withdrawn in the first Office action on the merits.

All claims directed to the composition (claims 1-2, 4-21 and 24) will be examined together on the merits.

The application will be forwarded to the examiner for preparation of an Office action consistent with this decision, and following the guidelines for rejoinder of process claims per MPEP 821.04(b).

Should there be any questions about this decision, please contact Quality Assurance Specialist Julie Burke, by letter addressed to Director, Technology Center 1600, at the address listed above, or by telephone at 571-272-0512 or by facsimile sent to the general Office facsimile number, 571-273-8300.

John LeGuyader
Director, Technology Center 1600

UNITED STATES PATENT AND TRADEMARK OFFICE

Commissioner for Patents
United States Patent and Trademark Office
P.O. Box 1450
Alexandria, VA 22313-1450
www.uspto.gov

MAILED

MAR 1 2 2005

Technology Center 2100

MATTINGLY, STANGER, MALUR & BRUNDIDGE, P.C.
1800 DIAGONAL ROAD
SUITE 370
ALEXANDRIA, VA 22314

In re Application of: Arakawa, et al.
Application No. 10/796,175
Filed: March 10, 2004
For: REMOTE COPY SYSTEM

DECISION ON PETITION
TO MAKE SPECIAL
(ACCELERATED
EXAMINATION)
UNDER M.P.E.P. §708.02 (VIII)

This is a response to the petition filed December 7, 2004, under 37 C.F.R. §1.102(d) and M.P.E.P. §708.02 (VIII): Accelerated Examination, to make the above-identified application special.

The Petition is **DISMISSED**.

M.P.E.P. §708.02, Section VIII which sets out the prerequisites for a grantable petition for Accelerated Examination under 37 C.F.R. §1.102(d) states in relevant part:

A new application (one which has not received any examination by the examiner) may be granted special status provided that applicant (and this term includes applicant's attorney or agent) complies with each of the following items:

(a) Submits a petition to make special accompanied by the fee set forth in **37 CFR 1.17(h)**;

(b) Presents all claims directed to a single invention, or if the Office determines that all the claims presented are not obviously directed to a single invention, will make an election without traverse as a prerequisite to the grant of special status;

(c) Submits a statement(s) that a pre-examination search was made, listing the field of search by class and subclass, publication, Chemical Abstracts, foreign patents, etc. The pre-examination search must be directed to the invention as claimed in the application for which special status is requested. A search made by a foreign patent office satisfies this requirement;

(d) Submits one copy each of the references deemed most closely related to the subject matter encompassed by the claims if said references are not already of record; and

(e) Submits a detailed discussion of the references, which discussion points out, with the particularity required by 37 CFR 1.111 (b) and (c), how the claimed subject matter is patentable over the references.

The petition filed December 7, 2004 fails to adequately meet requirement (e) of the criteria set forth above. With respect to requirement (e), a complete detailed discussion of the (aforementioned most closely related) references has not been provided with the necessary specificity required under 37 CFR 1.111 (b) and (c). Specifically, Petitioner should ensure that the above discussion is directed to how the language of **each of the independent claims** are specifically distinguishable and patentable from the references provided in requirement (d) above. It is noted that independent claim 1 differs in scope from the discussion presented in the petition with respect to independent claim 7, specifically regarding the third storage system and processing steps involving the third storage system with other logical volumes. Furthermore, a detailed discussion of the non-patent literature entitled "Role of Backup in Data Recovery" was not provided in the petition.

Petition to Make Special **DISMISSED**.

Petitioner is given one opportunity to perfect the petition. Any request for reconsideration must be filed within TWO MONTHS of the mail date of this decision. Extensions of time under 37 CFR 1.136(a) are permitted by a declaration or statement providing the information as outlined above.

Until the renewed petition is submitted, the application will be returned to the examiner's docket to await treatment on the merits in the normal order of examination.

Brian L. Johnson
Special Program Examiner
Technology Center 2100
Computer Architecture, Software and Information Security
571-272-3595

SDL: 03/11/05

UNITED STATES PATENT AND TRADEMARK OFFICE

Commissioner for Patents
United States Patent and Trademark Office
P.O. Box 1450
Alexandria, VA 22313-1450
www.uspto.gov

MAILED
JUL 0 5 2005
Technology Center 2100

MATTINGLY, STANGER, MALUR & BRUNDIDGE, P.C
1800 DIAGONAL ROAD
SUITE 370
ALEXANDRIA VA 22314

In re Application of: Arakawa, et al.
Application No. 10/796,175
Filed: 10 March 2004
For: REMOTE COPY SYSTEM

DECISION ON PETITION
TO MAKE SPECIAL
(ACCELERATED EXAMINATION)
UNDER M.P.E.P. §708.02 (VIII)

This is a decision on the Request for Reconsideration filed 12 May 2005 on Applicant's petition to make special under 37 C.F.R. §102(d) and M.P.E.P. §708.02(VIII): Accelerated Examination, originally filed on 7 December 2004.

The Petition is **GRANTED**.

M.P.E.P. § 708.02, Section VIII which sets out the prerequisites for a grantable petition for Accelerated Examination under 37 C.F.R. § 102(d) states in relevant part:

A new application (one which has not received any examination by the examiner) may be granted special status provided that applicant (and this term includes applicant's attorney or agent) complies with each of the following items:

(a) Submits a petition to make special accompanied by the fee set forth in 37 CFR 1.17(h);

(b) Presents all claims directed to a single invention, or if the Office determines that all the claims presented are not obviously directed to a single invention, will make an election without traverse as a prerequisite to the grant of special status;

(c) Submits a statement(s) that a pre-examination search was made, listing the field of search by class and subclass, publication, Chemical Abstracts, foreign patents, etc. The pre-examination search must be directed to the invention as claimed in the application for which special status is requested. A search made by a foreign patent office satisfies this requirement;

(d) Submits one copy each of the references deemed most closely related to the subject matter encompassed by the claims if said references are not already of record; and

(e) Submits a detailed discussion of the references, which discussion points out, with the particularity required by 37 CFR 1.111 (b) and (c), how the claimed subject matter is patentable over the references.

Petition to Make Special **GRANTED** since all of the requirements for special status under MPEP § 708.02(VIII) have been met.

The application is being forwarded to the Examiner for accelerated examination in accordance with M.P.E.P. §708.02, Section VIII. If the application is subsequently allowed, it will be given priority for printing. See M.P.E.P. §1309.

Brian L. Johnson
Special Program Examiner 6/30/05
Technology Center 2100
Computer Architecture, Software and Information Security
571-272-3595

GO

UNITED STATES PATENT AND TRADEMARK OFFICE

COMMISSIONER FOR PATENTS
UNITED STATES PATENT AND TRADEMARK OFFICE
P.O. BOX 1450
ALEXANDRIA, VA 22313-1450
www.uspto.gov

FINNEGAN, HENDERSON, FARABOW, GARRETT & DUNNER
LLP
901 NEW YORK AVENUE, NW
WASHINGTON DC 20001-4413

COPY MAILED

OCT 0 4 2005

OFFICE OF PETITIONS

Applicant: Muller et al.
Appl. No.: 10/796,182
Filing Date: Mach 10, 2004
Title: COSMETIC COMPOSITIONS COMPRISING AT LEAST ONE CROSSLINKED COPOLYMER, AT LEAST ONE CYCLODEXTRIN AND AT LEAST ONE SURFACTANT, AND USES THEREOF
Attorney Docket No.: 05725.1271
Pub. No.: US 2004/0234482 A1
Pub. Date: November 25, 2004

This is a decision on the request for a corrected patent application publication under 37 CFR 1.221(b), filed on January 25, 2005, for the above-identified application.

The request is granted.

The corrected patent application publication will be published in due course, unless the patent issues before the application is republished.

Inquiries relating to this matter may be directed to Mark Polutta at (571) 272-7709 (voice).

Mark O. Polutta
Office of Patent Legal Administration
Office of the Deputy Commissioner
for Patent Examination Policy

UNITED STATES PATENT AND TRADEMARK OFFICE

Commissioner for Patents
United States Patent and Trademark Office
P.O. Box 1450
Alexandria, VA 22313-1450
www.uspto.gov

June 7, 2006

Patent No. : 6,993,275 B2
Ser. No. : 10/796,208
Inventor(s) : Teruaki Mitsuya, et al.
Issued : January 31, 2006
Title : **IMAGE POSITION DETECTING METHOD**
Docket No. : **03280092US**

Re: Request for Certificate of Correction

Consideration has been given your request for the issuance of a certificate of correction for the above-identified patent under the provisions of Rule(s) 1.322 and/or 1.323.

Assignees' names and addresses (assignment data) printed in a patent, are based *solely* on information supplied in the appropriate space for identifying the assignment data, i.e., item 3 of the Issue Fee Transmittal Form PTOL-85B. Granting of a request under 37 CFR 3.81(b) is required to correct applicant's error providing ***incorrect or erroneous*** assignment data, *before* issuance of a Certificate of Correction, under 37 CFR 1.323 *(see Manual of Patent Examining Procedures (M.P.E.P) Chp.1400, sect. 1481).* This procedure is required *at any time after the issue fee is paid*, including after issuance of the patent.

In view of the foregoing, your request, in this mater, is hereby denied.

A request to correct the Assignee under 37 CFR 3.81(b) should include:

A. **the processing fee set forth in 37 CFR 1.117(h) (currently $130);**
B. a statement that the failure to include the correct assignee name on the PTOL-85B was inadvertent; and
C. a copy of the Notice of Recordation of Assignment Document, reflecting the reel and frame number where the assignment(s) is recorded and/or reflecting proof of *the date* the assignment was submitted for recordation.

In the Request, Applicant(s) may request that the file be forwarded to Certificates of Correction Branch, for issuance of a Certificate of Correction, if the Request is granted.

Any request under 37 CFR 3.81(b) should be directed to the following address or facsimile number:

By mail: Mail Stop PETITIONS
Commissioner for Patents
Post Office Box 1450
Alexandria, VA 22313-1450

By hand: Customer Service Window
Mail Stop Petitions
Randolph Building
401 Dulany Street
Alexandria, VA 22314

By fax: (703) 872-9306
ATTN: Office of Petitions

If a fee (currently $100) was previously submitted for consideration of a Request for Certificate of Correction, under CFR 1.323, to correct assignment data, , no additional fee is required.

Antonio Johnson
For Cecelia Newman
Decisions & Certificates
of Correction Branch
(703) 308-9390 ext. 111 or (703) 308-8309

McGuire Woods
1750 Tysons Boulevard – Suite 1800
McLean, VA 22102

UNITED STATES PATENT AND TRADEMARK OFFICE

Commissioner for Patents
United States Patent and Trademark Office
P.O. Box 1450
Alexandria, VA 22313-1450
www.uspto.gov

WENDEROTH, LIND & PONACK L.L.P.
1030 15TH STREET NW, SUITE 400 EAST
WASHINGTON, DC 20005-1503

COPY MAILED

DEC 0 2 2009

OFFICE OF PETITIONS

In re Application of :
Kunihiko HAYASHI :
Application No. 10/796,213 : DECISION GRANTING PETITION
Filed: March 10, 2004 : UNDER 37 CFR 1.313(c)(2)
Attorney Docket No. **2004_0378A** :

This is a decision on the petition under 37 CFR 1.313(c)(2), filed November 27, 2009, to withdraw the above-identified application from issue after payment of the issue fee.

The petition is **GRANTED**.

The above-identified application is withdrawn from issue for consideration of a submission under 37 CFR 1.114 (request for continued examination). *See* 37 CFR 1.313(c)(2).

Petitioner is advised that the issue fee paid on October 26, 2009 cannot be refunded. If, however, this application is again allowed, petitioner may request that it be applied towards the issue fee required by the new Notice of Allowance.[1]

Telephone inquiries should be directed to the undersigned at (571) 272-7253.

This application is being referred to Technology Center AU 2195 for processing of the request for continued examination under 37 CFR 1.114 and for consideration of the concurrently filed information disclosure statement.

/Monica A. Graves/
Petitions Examiner, Office of Petitions

---

[1] *The request to apply the issue fee to the new Notice may be satisfied by completing and returning the new Part B – Fee(s) Transmittal Form (along with any balance due at the time of submission). Petitioner is advised that the Issue Fee Transmittal Form* ***must*** *be completed and timely submitted to avoid abandonment of the application.*

SPE RESPONSE FOR CERTIFICATE OF CORRECTION

Paper No.: _____

DATE : 10/16/09

TO SPE OF : ART UNIT 2162
SUBJECT : Request for Certificate of Correction for Appl. No 10/796,217 No.: 7,356,542

Please respond to this request for a certificate of correction within 7 days.

FOR IFW FILES:

Please review the requested changes/corrections as shown in the **COCIN** document(s) in the IFW application image. No new matter should be introduced, nor should the scope or meaning of the claims be changed.

Please complete the response (see below) and forward the completed response to scanning using document code **COCX**.

FOR PAPER FILES:

Please review the requested changes/corrections as shown in the attached certificate of correction. Please complete this form (see below) and forward it with the file to:

Certificates of Correction Branch (CofC)

Should the change Be made?

RoChaun Johnson
Certificates of Correction Branch
571 272-0470

Thank You For Your Assistance

The request for issuing the above-identified correction(s) is hereby:
Note your decision on the appropriate box.

X Approved	**All** changes apply.
☐ **Approved in Part**	Specify below which changes **do not** apply.
☐ **Denied**	State the reasons for denial below.

Comments: Approved

/John Breene/ 2162
SPE Art Unit

UNITED STATES PATENT AND TRADEMARK OFFICE

COMMISSIONER FOR PATENTS
UNITED STATES PATENT AND TRADEMARK OFFICE
WASHINGTON, DC 20231
www.uspto.gov

MAIL

FEB 1 3 2001

DIRECTOR OFFICE
TECHNOLOGY CENTER 2600

TOWNSEND AND TOWNSEND AND CREW, LLP
TWO EMBARCADERO CENTER
EIGHTH FLOOR
SAN FRANCISCO, CA 94111-3834

In re Application of
Jiun-Ming Wang, *et al.*
Serial No.: 10/796, 222
Filed: March 8, 2004
For: **METHOD FOR MAKING A COLORFUL 3D MODEL**

DECISION ON PETITION
ACCEPTANCE OF COLOR DRAWINGS

This is a decision on the petition under 37 CFR §1.83 filed March 8, 2004 and resubmitted on February 2, 2006, which is being treated as a petition under 37 CFR § 1.84(a)(2), requesting acceptance of color drawings.

The petition requests that the color drawings identified in Figures 1(a) (d), 3A-D, 5, 6, 7, 8A, 8B, 9 and 11, 13 and 14, 15A, B, 17A, B and C, be accepted in lieu of black and white drawings.

A grantable petition under 37 C.F.R. §1.84(a)(2) must be accompanied by a fee set forth under 37 C.F.R. § 1.17(h), 3 (three) sets of the color drawings in question, and the specification must contain, or be amended to contain, the following language as the first paragraph in that portion of the specification relating to the brief description of the drawings:

"The file of this patent contains at least one drawing executed in color. Copies of this patent with color drawing(s) will be provided by the Patent and Trademark Office upon request and payment of the necessary fee."

The petition is **GRANTED**. The three (3) sets of color drawings filed February 2, 2006 are acceptable.

Dwayne Bost
Special Program Examiner
Technology Center 2600
Communications

UNITED STATES PATENT AND TRADEMARK OFFICE

UNITED STATES DEPARTMENT OF COMMERCE
United States Patent and Trademark Office
Address: COMMISSIONER FOR PATENTS
P.O. Box 1450
Alexandria, Virginia 22313-1450
www.uspto.gov

KATTEN MUCHIN ROSENMAN LLP
575 MADISON AVENUE
NEW YORK, NY 10022-2585

Mail Date: 04/21/2010

Applicant	: Motohiro Uchiyama	: DECISION ON REQUEST FOR
Patent Number	: 7639683	: RECALCULATION of PATENT
Issue Date	: 12/29/2009	: TERM ADJUSTMENT IN VIEW
Appliction No	: 10/796,223	: OF WYETH AND NOTICE OF INTENT TO
Filed	: 03/09/2004	: ISSUE CERTIFICATE OF CORRECTION
		:

The Request for Recalculation is **GRANTED** to the extent indicated.

The patent term adjustment has been determined to be **1040** days. The USPTO will *sua sponte* issue a certificate of correction reflecting the amount of PTA days determined by the recalculation.

Prior to the issuance of the certificate of correction, the USPTO will afford patentee an opportunity to be heard and request reconsideration. Accordingly, patentee has **one month or thirty (30) days**, whichever is longer, to file a request for reconsideration of this patent term adjustment calculation. See 35 U.S.C. 154(b)(3)(B)(ii) and 37 CFR 1.322(a)(4). No extensions of time will be granted under 37 CFR 1.136.

Patentee should use document code PET.OP if electronically filing a request for reconsideration of this patent term adjustment calculation. The patentee must also include the information required by 37 CFR 1.705(b)(2) and the fee required by 37 CFR 1.18(e). If patentee does not file a timely request for reconsideration of this patent term adjustment calculation including the information required by 37 CFR 1.705(b)(2) and the fee required by 37 CFR 1.18(e), the USPTO will issue a certificate of correction reflecting the PTA determination noted above.

Patentee should be aware that in order to preserve the right to review in the United States District Court for the District of Columbia of the USPTO patent term adjustment determination, patentee must ensure that he or she also take the steps required under 35 U.S.C. 154(b)(4)(A) in a timely manner. Nothing in the request for recalculation should be construed as providing an alternative time frame for commencing a civil action under 35 U.S.C. 154(b)(4)(A).

Any questions concerning this decision should be directed to the Office of Patent Legal Administration at 571-272-7702.

UNITED STATES PATENT AND TRADEMARK OFFICE

Commissioner for Patents
United States Patent and Trademark Office
P.O. Box 1450
Alexandria, VA 22313-1450
www.uspto.gov

SIEMENS CORPORATION
INTELLECTUAL PROPERTY DEPARTMENT
170 WOOD AVENUE SOUTH
ISELIN NJ 08830

MAILED

FEB 17 2009

OFFICE OF PETITIONS

In re Application of	:	
William A. LANDI et al.	:	
Application No. 10/796,255	:	DECISION ON PETITION
Filed: March 09, 2004	:	
Attorney Docket No. **2003P03684US**	:	

This is a decision on the petition under the unintentional provisions of 37 CFR 1.137(b), filed January 30, 2009, to revive the above-identified application.

The petition is **GRANTED**.

This application became abandoned for failure to timely pay the issue and publication fees on or before January 06, 2009, as required by the Notice of Allowance and Fee(s) Due, mailed October 06, 2008, which set a statutory period for reply of three (3) months. Accordingly, the application became abandoned on January 07, 2009.

The petition satisfies the requirements of 37 CFR 1.137(b) in that petitioner has supplied (1) the reply in the form of payment of the issue fee of $1,510.00 and publication fee of $300.00; (2) the petition fee of $1,620.00; and (3) a proper statement of unintentional delay. Accordingly, the issue and publication fee payments are accepted as being unintentionally delayed.

Telephone inquiries concerning this decision should be directed to Michelle R. Eason at (571) 272-4231.

This application is being referred to Office of Data Management.

Michelle R. Eason

Michelle R. Eason
Paralegal Specialist
Office of Petitions

UNITED STATES PATENT AND TRADEMARK OFFICE

UNITED STATES DEPARTMENT OF COMMERCE
United States Patent and Trademark Office
Address: COMMISSIONER FOR PATENTS
P.O. Box 1450
Alexandria, Virginia 22313-1450
www.uspto.gov

Wong Cabello Lutsch Rutherford & Brucculeri LLP
20333 Tomball Parkway, 6th Floor
Houston, TX 77070

Mail Date: 04/21/2010

Applicant	: Oran Uzrad-Nali	: DECISION ON REQUEST FOR
Patent Number	: 7668841	: RECALCULATION of PATENT
Issue Date	: 02/23/2010	: TERM ADJUSTMENT IN VIEW
Appliction No	: 10/796,273	: OF WYETH AND NOTICE OF INTENT TO
Filed	: 03/10/2004	: ISSUE CERTIFICATE OF CORRECTION
		:

The Request for Recalculation is **GRANTED** to the extent indicated.

The patent term adjustment has been determined to be **1568** days. The USPTO will *sua sponte* issue a certificate of correction reflecting the amount of PTA days determined by the recalculation.

Prior to the issuance of the certificate of correction, the USPTO will afford patentee an opportunity to be heard and request reconsideration. Accordingly, patentee has **one month or thirty (30) days**, whichever is longer, to file a request for reconsideration of this patent term adjustment calculation. See 35 U.S.C. 154(b)(3)(B)(ii) and 37 CFR 1.322(a)(4). No extensions of time will be granted under 37 CFR 1.136.

Patentee should use document code PET.OP if electronically filing a request for reconsideration of this patent term adjustment calculation. The patentee must also include the information required by 37 CFR 1.705(b)(2) and the fee required by 37 CFR 1.18(e). If patentee does not file a timely request for reconsideration of this patent term adjustment calculation including the information required by 37 CFR 1.705(b)(2) and the fee required by 37 CFR 1.18(e), the USPTO will issue a certificate of correction reflecting the PTA determination noted above.

Patentee should be aware that in order to preserve the right to review in the United States District Court for the District of Columbia of the USPTO patent term adjustment determination, patentee must ensure that he or she also take the steps required under 35 U.S.C. 154(b)(4)(A) in a timely manner. Nothing in the request for recalculation should be construed as providing an alternative time frame for commencing a civil action under 35 U.S.C. 154(b)(4)(A).

Any questions concerning this decision should be directed to the Office of Patent Legal Administration at 571-272-7702.

UNITED STATES PATENT AND TRADEMARK OFFICE

Commissioner for Patents
United States Patent and Trademark Office
P.O. Box 1450
Alexandria, VA 22313-1450
www.uspto.gov

MORRISON & FOERSTER, LLP
1650 TYSONS BOULEVARD, SUITE 400
MCLEAN, VA 22102

COPY MAILED

NOV 07 2007

OFFICE OF PETITIONS

In re Application of :
OLAH, Geza :
Application No. 10/796,275 : DECISION ON PETITION
Filed: March 10, 2004 : TO WITHDRAW
Attorney Docket No. **449122068200** : FROM RECORD
:

This is a decision on the Request to Withdraw as attorney or agent of record under 37 C.F.R. § 1.36(b), filed May 17, 2007.

The request is **NOT APPROVED** as moot.

A review of the file record indicates that the power of attorney to **MORRISON & FOERSTER, LLP** has been revoked by the assignee of the patent application on September 11, 2007. Accordingly, the request to withdraw under 37 C.F.R. § 1.36(b) is moot.

All future communications from the Office will continue to be directed to the below-listed address until otherwise notified by applicant.

Telephone inquires concerning this decision should be directed to the undersigned at 571-272-7253.

Monica A. Graves
Petitions Examiner
Office of Petitions

cc: **BELL BOYD & LLOYD, LLP**
P.O. BOX 1135
CHICAGO, IL 60690

UNITED STATES PATENT AND TRADEMARK OFFICE

UNITED STATES DEPARTMENT OF COMMERCE
United States Patent and Trademark Office
Address: COMMISSIONER FOR PATENTS
P.O. Box 1450
Alexandria, Virginia 22313-1450
www.uspto.gov

North Star Intellectual Property Law, PC
P.O. Box 34688
Washington, DC 20043

Mail Date: 04/21/2010

Applicant	: Kil-soo Jung	: DECISION ON REQUEST FOR
Patent Number	: 7596579	: RECALCULATION of PATENT
Issue Date	: 09/29/2009	: TERM ADJUSTMENT IN VIEW
Appliction No	: 10/796,284	: OF WYETH AND NOTICE OF INTENT TO
Filed	: 03/10/2004	: ISSUE CERTIFICATE OF CORRECTION
		:

The Request for Recalculation is **GRANTED** to the extent indicated.

The patent term adjustment has been determined to be **472** days. The USPTO will *sua sponte* issue a certificate of correction reflecting the amount of PTA days determined by the recalculation.

Prior to the issuance of the certificate of correction, the USPTO will afford patentee an opportunity to be heard and request reconsideration. Accordingly, patentee has **one month or thirty (30) days**, whichever is longer, to file a request for reconsideration of this patent term adjustment calculation. See 35 U.S.C. 154(b)(3)(B)(ii) and 37 CFR 1.322(a)(4). No extensions of time will be granted under 37 CFR 1.136.

Patentee should use document code PET.OP if electronically filing a request for reconsideration of this patent term adjustment calculation. The patentee must also include the information required by 37 CFR 1.705(b)(2) and the fee required by 37 CFR 1.18(e). If patentee does not file a timely request for reconsideration of this patent term adjustment calculation including the information required by 37 CFR 1.705(b)(2) and the fee required by 37 CFR 1.18(e), the USPTO will issue a certificate of correction reflecting the PTA determination noted above.

Patentee should be aware that in order to preserve the right to review in the United States District Court for the District of Columbia of the USPTO patent term adjustment determination, patentee must ensure that he or she also take the steps required under 35 U.S.C. 154(b)(4)(A) in a timely manner. Nothing in the request for recalculation should be construed as providing an alternative time frame for commencing a civil action under 35 U.S.C. 154(b)(4)(A).

Any questions concerning this decision should be directed to the Office of Patent Legal Administration at 571-272-7702.

UNITED STATES PATENT AND TRADEMARK OFFICE

UNITED STATES DEPARTMENT OF COMMERCE
United States Patent and Trademark Office
Address: COMMISSIONER FOR PATENTS
P.O. Box 1450
Alexandria, Virginia 22313-1450
www.uspto.gov

North Star Intellectual Property Law, PC
P.O. Box 34688
Washington, DC 20043

Mail Date: 05/18/2010

Applicant : Kil-soo Jung
Patent Number : 7596579
Issue Date : 09/29/2009
Application No: 10/796,284
Filed : 03/10/2004

: NOTICE CONCERNING IMPROPER
: CALCULATION OF PATENT TERM
: ADJUSTMENT BASED UPON USPTO
: IMPROPERLY MEASURING REDUCTION
: PERIOD UNDER 37 CFR 1.704(c)(10).

The United States Patent and Trademark Office (USPTO) discovered that in processing the recent recalculation decisions mailed in response to patentee's filed Request for Recalculation of Patent Term Adjustment in view of Wyeth, the USPTO improperly measured the reduction period for reductions under 37 CFR 1.704(c)(10). Pursuant to 37 CFR 1.704(c)(10), patentee's reduction begins on the date of filing the amendment under 37 CFR 1.312 ("1.312 amendment") or other related paper and ends on the date that the Office mails a response to the filing of the 1.312 amendment or other paper. It has been discovered that during the recalculation, the calculation failed to the limit the reduction to the mail date of the response to the 1.312 amendment or other paper. Accordingly, patentee's reductions were greater than warranted.

This notice **VACATES** the previous GRANTED request for recalculation and provides patentee with a revised GRANTED recalculation.

The patent term adjustment has been determined to be **520** days. The USPTO will *sua sponte* issue a certificate of correction reflecting the amount of patent term adjustment (PTA) days determined by the recalculation.

Prior to the issuance of the certificate of correction, the USPTO will afford patentee an opportunity to be heard and request reconsideration. Accordingly, patentee has **one month or thirty (30) days** from the mail date of this notice, whichever is longer, to file a request for reconsideration of this PTA calculation. See 35 U.S.C. § 154(b)(3)(B)(ii) and 37 CFR 1.322(a)(4).

Patentee should use document code PET.OP if electronically filing a request for reconsideration of this PTA calculation. The patentee must also include the information required by 37 CFR 1.705(b)(2), and the fee required by 37 CFR 1.18(e). If patentee does not file a timely request for reconsideration of this PTA calculation, including the information required by 37 CFR 1.705(b)(2) and the fee required by 37 CFR 1.18(e), the USPTO will issue a certificate of correction reflecting the PTA determination noted above.

Patentee should be aware that in order to preserve the right of review of the USPTO's PTA determination in the United States District Court for the District of Columbia, patentee must ensure that the steps required under 35 U.S.C. § 154 (b)(4) are taken in a timely manner. Nothing in the request for recalculation should be construed as providing an alternative time frame for commencing a civil action under 35 U.S.C. § 154(b)(4).

Issue Classification	Application/Control No.	Applicant(s)/Patent under Reexamination	
	10/796,298	MITSUHASHI, MASATO	
	Examiner	Art Unit	
	FRANK W. LU	1634	

ISSUE CLASSIFICATION

ORIGINAL						CROSS REFERENCE(S)							
CLASS				SUBCLASS	CLASS	SUBCLASS (ONE SUBCLASS PER BLOCK)							
435				91.51	435	6	91.1	91.2					
INTERNATIONAL CLASSIFICATION					536	23.1	24.3	24.33	25.3	25.32			
C	1	2	P	19/34									
C	1	2	Q	1/68									
C	0	7	H	21/02									
C	0	7	H	21/04									
C	0	7	H	21/00									

(Assistant Examiner) (Date)	/Frank W Lu/ 2/1/2010	Total Claims Allowed: 39
(Legal Instruments Examiner) (Date)	(Primary Examiner) (Date)	O.G. Print Claim(s): 1 / O.G. Print Fig.: None

☐ Claims renumbered in the same order as presented by applicant ☒ CPA ☐ T.D. ☐ R.1.47

Final	Original	Final	Original	Final	Original	Final	Original	Final	Original	Final	Original	Final	Original
	211		241		271		301		331		361		391
	212		242		272		302		332		362		392
	213		243		273		303		333		363		393
	214		244		274		304		334		364		394
35	215		245		275		305		335		365		395
	~~216~~		246		276		306		336		366		396
36	217		247		277		307		337		367		397
37	218		248		278		308		338		368		398
38	219		249		279		309		339		369		399
17	220		250		280		310		340		370		400
18	221		251		281		311		341		371		401
19	222		252		282		312		342		372		402
20	223		253		283		313		343		373		403
21	224		254		284		314		344		374		404
22	225		255		285		315		345		375		405
23	226		256		286		316		346		376		406
24	227		257		287		317		347		377		407
25	228		258		288		318		348		378		408
26	229		259		289		319		349		379		409
27	230		260		290		320		350		380		410
28	231		261		291		321		351		381		411
29	232		262		292		322		352		382		412
30	233		263		293		323		353		383		413
31	234		264		294		324		354		384		414
32	235		265		295		325		355		385		415
33	236		266		296		326		356		386		416
24	237		267		297		327		357		387		417
	~~238~~		268		298		328		358		388		418
	~~239~~		269		299		329		359		389		419
39	240		270		300		330		360		390		420

Issue Classification	Application/Control No.	Applicant(s)/Patent under Reexamination	
	10/796,298	MITSUHASHI, MASATO	
	Examiner	Art Unit	
	FRANK W. LU	1634	

ISSUE CLASSIFICATION

ORIGINAL						CROSS REFERENCE(S)							
CLASS				SUBCLASS	CLASS	SUBCLASS (ONE SUBCLASS PER BLOCK)							
435				91.51	435	6	91.1	91.2					
INTERNATIONAL CLASSIFICATION					536	23.1	24.3	24.33	25.3	25.32			
C	1	2	P	19/34									
C	1	2	Q	1/68									
C	0	7	H	21/02									
C	0	7	H	21/04									
C	0	7	H	21/00									

(Assistant Examiner) (Date)	/Frank W Lu/ 2/1/2010	Total Claims Allowed: 39	
(Legal Instruments Examiner) (Date)	(Primary Examiner) (Date)	O.G. Print Claim(s) 1	O.G. Print Fig. None

☐ Claims renumbered in the same order as presented by applicant ☒ CPA ☐ T.D. ☐ R.1.47

Final	Original	Final	Original	Final	Original	Final	Original	Final	Original	Final	Original	Final	Original
	1		31		61	16	91		121		151		181
	2		32		62	15	92		122		152		182
	3		33		63		93		123		153		183
	4		34		64		94		124		154		184
	5		35		65		95		125		155		185
	6		36		66		96		126		156		186
	7		37		67		97		127		157		187
	8		38		68		98		128		158		188
	9		39		69		99		129		159		189
	10		40		70		100		130		160		190
	11		41		71		101		131		161		191
	12		42		72		102		132		162		192
	13		43	1	73		103		133		163		193
	14		44		~~74~~		104		134		164		194
	15		45	2	75		105		135		165		195
	16		46		~~76~~		106		136		166		196
	17		47	11	77		107		137		167		197
	18		48	12	78		108		138		168		198
	19		49	3	79		109		139		169		199
	20		50		~~80~~		110		140		170		200
	21		51		~~81~~		111		141		171		201
	22		52	4	82		112		142		172		202
	23		53	13	83		113		143		173		203
	24		54	5	84		114		144		174		204
	25		55	6	85		115		145		175		205
	26		56	7	86		116		146		176		206
	27		57	14	87		117		147		177		207
	28		58	8	88		118		148		178		208
	29		59	9	89		119		149		179		209
	30		60	10	90		120		150		180		210

Issue Classification	Application/Control No.	Applicant(s)/Patent under Reexamination	
	10/796,298	MITSUHASHI, MASATO	
	Examiner	Art Unit	
	FRANK W. LU	1634	

ISSUE CLASSIFICATION

ORIGINAL						CROSS REFERENCE(S)							
CLASS				SUBCLASS	CLASS	SUBCLASS (ONE SUBCLASS PER BLOCK)							
435				91.51	435	6	91.1	91.2					
INTERNATIONAL CLASSIFICATION					536	23.1	24.3	24.33	25.3	25.33			
C	1	2	P	19/34									
C	1	2	Q	1/68									
C	0	7	H	21/02									
C	0	7	H	21/04									
C	0	7	H	21/00									

(Assistant Examiner) (Date)	/Frank W Lu/ 3/31/2010	Total Claims Allowed: 37
(Legal Instruments Examiner) (Date)	(Primary Examiner) (Date)	O.G. Print Claim(s): 1 / O.G. Print Fig.: None

☐ Claims renumbered in the same order as presented by applicant ☒ CPA ☐ T.D. ☐ R.1.47

Final	Original	Final	Original	Final	Original	Final	Original	Final	Original	Final	Original	Final	Original
	211		241		271		301		331		361		391
	212		242		272		302		332		362		392
	213		243		273		303		333		363		393
	214		244		274		304		334		364		394
35	215		245		275		305		335		365		395
	~~216~~		246		276		306		336		366		396
36	217		247		277		307		337		367		397
	~~218~~		248		278		308		338		368		398
37	219		249		279		309		339		369		399
17	220		250		280		310		340		370		400
18	221		251		281		311		341		371		401
19	222		252		282		312		342		372		402
20	223		253		283		313		343		373		403
21	224		254		284		314		344		374		404
22	225		255		285		315		345		375		405
23	226		256		286		316		346		376		406
24	227		257		287		317		347		377		407
25	228		258		288		318		348		378		408
26	229		259		289		319		349		379		409
27	230		260		290		320		350		380		410
28	231		261		291		321		351		381		411
29	232		262		292		322		352		382		412
30	233		263		293		323		353		383		413
31	234		264		294		324		354		384		414
32	235		265		295		325		355		385		415
33	236		266		296		326		356		386		416
34	237		267		297		327		357		387		417
	238		268		298		328		358		388		418
	239		269		299		329		359		389		419
	240		270		300		330		360		390		420

Issue Classification	Application/Control No.	Applicant(s)/Patent under Reexamination
	10/796,298	MITSUHASHI, MASATO
	Examiner	**Art Unit**
	FRANK W. LU	1634

ISSUE CLASSIFICATION

ORIGINAL						CROSS REFERENCE(S)						
CLASS				SUBCLASS	CLASS	SUBCLASS (ONE SUBCLASS PER BLOCK)						
435				91.51	435	6	91.1	91.2				
INTERNATIONAL CLASSIFICATION					536	23.1	24.3	24.33	25.3	25.32		
C	1	2	P	19/34								
C	1	2	Q	1/68								
C	0	7	H	21/02								
C	0	7	H	21/04								
C	0	7	H	21/00								

(Assistant Examiner) (Date)	/Frank W Lu/ 3/31/2010	**Total Claims Allowed: 37**
(Legal Instruments Examiner) (Date)	(Primary Examiner) (Date)	O.G. Print Claim(s): 1 — O.G. Print Fig.: None

☐ **Claims renumbered in the same order as presented by applicant** ☒ CPA ☐ T.D. ☐ R.1.47

Final	Original	Final	Original	Final	Original	Final	Original	Final	Original	Final	Original	Final	Original
	1		31		61	16	91		121		151		181
	2		32		62	15	92		122		152		182
	3		33		63		93		123		153		183
	4		34		64		94		124		154		184
	5		35		65		95		125		155		185
	6		36		66		96		126		156		186
	7		37		67		97		127		157		187
	8		38		68		98		128		158		188
	9		39		69		99		129		159		189
	10		40		70		100		130		160		190
	11		41		71		101		131		161		191
	12		42		72		102		132		162		192
	13		43	1	73		103		133		163		193
	14		44		~~74~~		104		134		164		194
	15		45	2	75		105		135		165		195
	16		46		~~76~~		106		136		166		196
	17		47	11	77		107		137		167		197
	18		48	12	78		108		138		168		198
	19		49	3	79		109		139		169		199
	20		50		80		110		140		170		200
	21		51		81		111		141		171		201
	22		52	4	82		112		142		172		202
	23		53	13	83		113		143		173		203
	24		54	5	84		114		144		174		204
	25		55	6	85		115		145		175		205
	26		56	7	86		116		146		176		206
	27		57	14	87		117		147		177		207
	28		58	8	88		118		148		178		208
	29		59	9	89		119		149		179		209
	30		60	10	90		120		150		180		210

UNITED STATES PATENT AND TRADEMARK OFFICE

Commissioner for Patents
United States Patent and Trademark Office
P.O. Box 1450
Alexandria, VA 22313-1450
www.uspto.gov

JJGJr.: 04-05

Paper No. __

ROYLANCE, ABRAMS,
BERDO & GOODMAN, L.L.P.
1300 19TH STREET, N.W.
SUITE 600
WASHINGTON, DC 20036

COPY MAILED

APR 21 2005

OFFICE OF PETITIONS

In re Application of :
Rabenhorst, et al. :
Application No. 10/796,306 :
Filed: 10 March, 2004 : ON PETITION
Attorney Docket No: :
1135.42578X00/NC36764US :

This is a decision on the petition under 37 C.F.R. §1.78(a)(3), filed on 18 August, 2004, and supplemented via FAX on 23 September, 2004, to accept an unintentionally delayed claim under 35 U.S.C. §120 and 35 U.S.C. §365(c) for benefit of priority to prior-filed PCT Application No. PCT/EP02/09619 filed 29 August, 2002 (based upon German Application No. 101 44 308.0 filed 10 September, 2001), and set forth in the corrected application data sheet (ADS) submitted concurrently on 23 September, 2004.

The petition is **GRANTED**.

A petition for acceptance of a claim for late priority under 37 C.F.R. §1.78(a)(3) is only applicable to those applications filed on or after November 29, 2000. Further, the petition is appropriate only after the expiration of the period specified in 37 C.F.R. §1.78(a)(2)(ii). In addition, the petition under 37 C.F.R. §1.78(a)(3) must be accompanied by:

- the reference required by 35 U.S.C. §120 and 37 C.F.R. §1.78(a)(2)(i) of the prior-filed application, unless previously submitted;

- the surcharge set forth in §1.17(t); and

- a statement that the entire delay between the date the claim was due under 37 C.F.R. §1.78(a)(2)(ii) and the date the claim was filed was unintentional. The Commissioner may require additional where there is a question whether the delay was unintentional.

The instant nonprovisional application was filed after November 29, 2000, and the claim herein for the benefit of priority to the above-noted, prior-filed PCT application is submitted after expiration of the period specified in 37 C.F.R. §1.78(a)(2)(ii). Therefore, this is a proper petition under 37 C.F.R. §1.78(a)(3).

The petition complies with the requirements for a grantable petition under 37 C.F.R. §1.78(a)(3) in that (1) a reference to the above-noted, prior-filed PCT application has been included in an amendment to the first sentence of the specification following the title or corrected ADS, as provided by 37 C.F.R. §1.78(a)(2)(iii); (2) the surcharge fee required by 37 C.F.R. §1.17(t) has been submitted; and (3) the petition contains a proper statement of unintentional delay.

Accordingly, having found that the instant petition for acceptance of an unintentionally delayed claim for the benefit of priority under 35 U.S.C. §120 and §365(c) to the above-noted, prior-filed PCT application satisfies the conditions of 37 C.F.R. §1.78(a)(3), the petition is granted.

The granting of the petition to accept the delayed benefit claim to the prior-filed application under 37 C.F.R. § 1.78(a)(3) should not be construed as meaning that the instant application is entitled to the benefit of the prior-filed application. In order for the instant application to be entitled to the benefit of the prior-filed application, all other requirements under 35 U.S.C. §120 and §365(c) and 37 C.F.R. §1.78(a)(1) and (a)(2) must be met. Similarly, the fact that the corrected Filing Receipt accompanying this decision on petition includes the prior-filed application should not be construed as meaning that applicant is entitled to the claim for benefit of priority to the prior-filed application noted thereon. Accordingly, the examiner will, in due course, consider this benefit claim and determine whether the instant application is entitled to the benefit of the earlier filing date.

A corrected Filing Receipt, which includes the priority claim to the prior-filed application, accompanies this decision on petition.

This application is being forwarded to the examiner of Technology Center Art Unit 1632 for appropriate action on the corrected ADS on 23 September, 2004, including consideration of applicant's entitlement to claim benefit of priority under 35 U.S.C. §120 and §365(c) to the above-noted, prior-filed PCT application.

Inquiries concerning either the examination procedures or status of the application should be directed to the Technology Center.

Application No. 10/796,306

Inquiries concerning this decision may be directed to John Gillon, Senior Attorney, Office of Petitions at (571) 272-3214.

Frances Hicks
Petitions Examiner
Office of Petitions

Encl.: Corrected Filing Receipt

UNITED STATES PATENT AND TRADEMARK OFFICE

Commissioner for Patents
United States Patent and Trademark Office
P.O. Box 1450
Alexandria, VA 22313-1450
www.uspto.gov

FOLEY AND LARDNER LLP
SUITE 500
3000 K STREET NW
WASHINGTON, DC 20007

COPY MAILED

NOV 26 2007

OFFICE OF PETITIONS

In re Application of	:	
SANCILIO, Frederick D. et al.	:	
Application No. 10/796,308	:	DECISION ON PETITION
Filed: March 10, 2004	:	TO WITHDRAW
Attorney Docket No. **046121-0106**	:	FROM RECORD
	:	

This is a decision on the Request to Withdraw as attorney or agent of record under 37 C.F.R. § 1.36(b), filed September 10, 2007.

The request is **NOT APPROVED**.

A grantable request to withdraw as attorney/agent of record must be signed by every attorney/agent seeking to withdraw or contain a clear indication that one attorney is signing on behalf of another/others. A request to withdraw will not be approved unless at least 30 (thirty) days would remain between the date of approval and the later of the expiration date of a time to file a response or the expiration date of the maximum time period which can be extended under 37 C.F.R. § 1.136(a).

In order to request or take action in a patent matter, the assignee must establish its ownership of the patent to the satisfaction of the Director. In this regard, a Statement under 37 CFR 3.73(b) must have either: (i) documentary evidence of a chain of title from the original owner to the assignee (*e.g.*, copy of an executed assignment), and a statement affirming that the documentary evidence of the chain of title from the original owner to the assignee was or concurrently is being submitted for recordation pursuant to § 3.11; or (ii) a statement specifying where documentary evidence of a chain of title from the original owner to the assignee is recorded in the assignment records of the Office (*e.g.*, reel and frame number).

All future communications from the Office will continue to be directed to the above-listed address until otherwise notified by applicant.

Telephone inquiries concerning this decision should be directed to the undersigned at 571-272- 4231.

Michelle R. Eason
Paralegal Specialist
Office of Petitions

cc: **MR. STEVEN A. FONTANA**
AAIPHARMA INC.
GENERAL PATENT COUNSEL
2320 SCIENTIFIC PARK DRIVE
WILMINGTON, NC 28405

SPE RESPONSE FOR CERTIFICATE OF CORRECTION

Paper No.: _____

DATE : 2-22-07

TO SPE OF : ART UNIT 2851

SUBJECT : Request for Certificate of Correction for Appl. No.: 10/796,309 Patent No.: 701268

Please respond to this request for a certificate of correction within 7 days.

Please review the requested changes/corrections as shown in the **COCIN** document(s) in the IFW application image. No new matter should be introduced, nor should the scope or meaning of the claims be changed.

Please check Drawings

Please complete the response (see below) and forward the completed response to scanning using document code **COCX**.

E Young

Certificates of Correction Branch

703-308-9390 ext. _____

Thank You For Your Assistance

The request for issuing the above-identified correction(s) is hereby:

Note your decision on the appropriate box.

- [x] **Approved** — All changes apply.
- [ ] **Approved in Part** — Specify below which changes do not apply.
- [ ] **Denied** — State the reasons for denial below.

Comments: _____

Diane Ann Lee — SPE

2851 — Art Unit

Cy C$

OIPE IAP65 JAN 1 0 2007 PATENT & TRADEMARK OFFICE

IN THE UNITED STATES PATENT AND TRADEMARK OFFICE

In re Patent of: Tasja VAN RHEE et al.

Patent No.: 7,012,672 B2 — Issued: March 14, 2006

Appln. No.: 10/796,309 — Group Art Unit: 2851

Filed: March 10, 2004 — Examiner: ALAN A. MATHEWS

For: LITHOGRAPHIC APPARATUS, SYSTEM, METHOD, COMPUTER PROGRAM, AND APPARATUS FOR HEIGHT MAP ANALYSIS

REQUEST FOR CERTIFICATE OF CORRECTION
UNDER 35 U.S.C. §255 AND PURSUANT
TO 37 C.F.R. §1.323

Certificate
JAN 1 2 2007
of Correction

Commissioner for Patents
Post Office Box 1450
Washington, DC 20231

Sir:

It is respectfully requested that a Certificate of Correction be issued in the subject patent for mistakes made by Applicants and the U.S. Patent and Trademark Office.

Attached are two properly completed Certificate of Correction Forms PTO-1050 showing the needed corrections. It is requested that these forms be certified by the Commissioner, with one form being returned to the undersigned.

In accordance with 37 C.F.R. § 1.20(a), the undersigned authorizes the charging of $100.00 to Deposit Account No. 03-3975 under order number 081468-0308602. A duplicate copy of this request is enclosed.

Respectfully submitted,

PILLSBURY WINTHROP SHAW PITTMAN LLP

By: _____

Jack S. Barufka
Reg. No.: 37087
Tel. No.: (703) 770-7712
Fax No.: (703) 770-7901

Date: January 10, 2007

P.O. Box 10500
McLean, VA 22102-4859
(703) 770-7900
Customer No. 00909

01/11/2007 MAHMED2 00000172 033975 7012672
01 FC:1811 100.00 DA

JAN 1 6 2007

Staple
Here
Only
Printer's
Trim
Line....→

UNITED STATES PATENT AND TRADEMARK OFFICE

CERTIFICATE OF CORRECTION

PATENT NO. :7,012,672 B2

DATED :March 14, 2006

INVENTOR :Tasja VAN RHEE et al.

It is certified that error appears in the above-identified patent and that said Letters Patent is hereby corrected as shown below:

On the title page, item (30) Foreign Application Priority Data:
replace "03075698" with --03075698.5--

Column 9, line 18
replace "tone" with --to one--

Column 9, line 64
replace "2B" with --3B--

Column 14, line 23
replace "avenge" with --average--

MAILING ADDRESS OF SENDER

PATENT NO. 7,012,672

Jack S. Barufka
Pillsbury Winthrop Shaw Pittman LLP
Intellectual Property Group
P.O. Box 10500
McLean, VA 22102-4859

JAN 1 6 2007

SUBSTITUTE FORM PTO 1050

Pat-1050 5/02

Staple Here Only Printer's Trim Line →

UNITED STATES PATENT AND TRADEMARK OFFICE

CERTIFICATE OF CORRECTION

PATENT NO. :7,012,672 B2

DATED :March 14, 2006

INVENTOR :Tasja VAN RHEE et al.

It is certified that error appears in the above-identified patent and that said Letters Patent is hereby corrected as shown below:

Please replace Figure 2 that is shown in the Letters Patent for Figure 2 shown below:

Fig 2

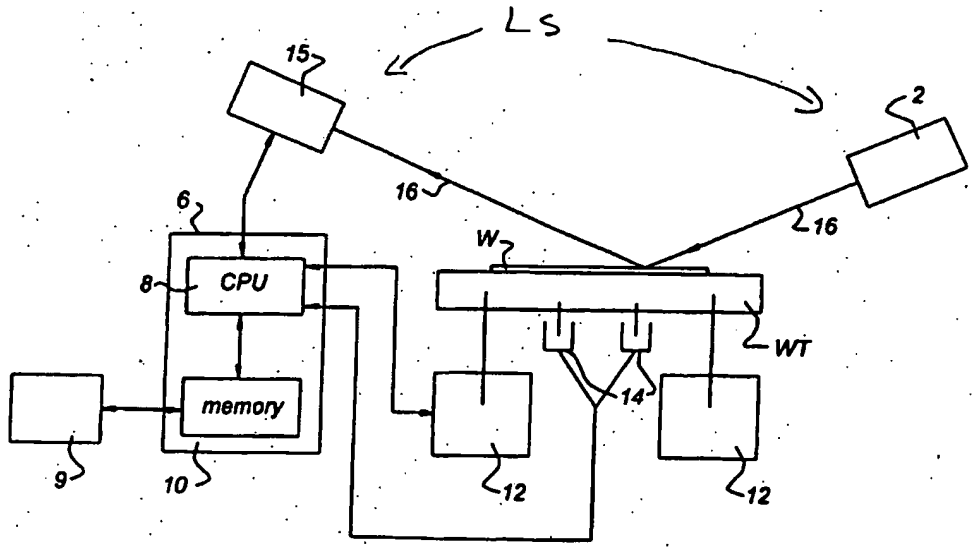

MAILING ADDRESS OF SENDER

PATENT NO. 7,012,672

Jack S. Barufka
Pillsbury Winthrop Shaw Pittman LLP
Intellectual Property Group
P.O. Box 10500
McLean, VA 22102-4859

JAN 1 6 2007

SUBSTITUTE FORM PTO 1050

Pat-1050 5/02

Staple Here Only Printer's Trim Line →

UNITED STATES PATENT AND TRADEMARK OFFICE

CERTIFICATE OF CORRECTION

PATENT NO. :7,012,672 B2

DATED :March 14, 2006

INVENTOR :Tasja VAN RHEE et al.

It is certified that error appears in the above-identified patent and that said Letters Patent is hereby corrected as shown below:

On the title page, item (30) Foreign Application Priority Data:
replace "03075698" with --03075698.5--.

Column 9, line 18
replace "tone" with --to one--.

Column 9, line 64
replace "2B" with --3B--.

Column 14, line 23
replace "avenge" with --average--.

MAILING ADDRESS OF SENDER

PATENT NO. 7,012,672

Jack S. Barufka
Pillsbury Winthrop Shaw Pittman LLP
Intellectual Property Group
P.O. Box 10500
McLean, VA 22102-4859

JAN 1 6 2007

SUBSTITUTE FORM PTO 1050

Pat-1050 5/02

Staple Here Only Printer's Trim Line →

UNITED STATES PATENT AND TRADEMARK OFFICE

CERTIFICATE OF CORRECTION

PATENT NO. :7,012,672 B2

DATED :March 14, 2006

INVENTOR :Tasja VAN RHEE et al.

It is certified that error appears in the above-identified patent and that said Letters Patent is hereby corrected as shown below:

Please replace Figure 2 that is shown in the Letters Patent for Figure 2 shown below:

Fig 2

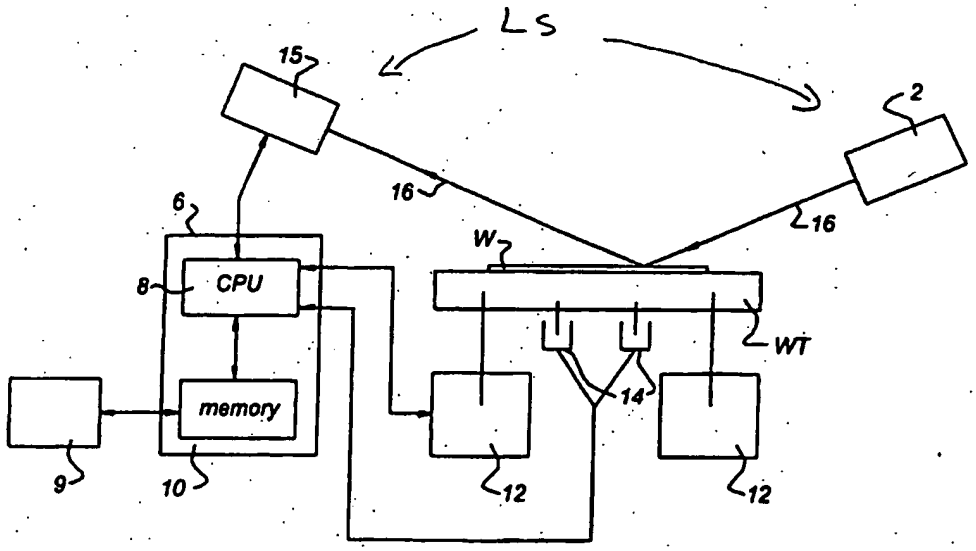

MAILING ADDRESS OF SENDER

PATENT NO. 7,012,672

Jack S. Barufka
Pillsbury Winthrop Shaw Pittman LLP
Intellectual Property Group
P.O. Box 10500
McLean, VA 22102-4859

JAN 16 2007

SUBSTITUTE FORM PTO 1050

Pat-1050 5/02

OIPE JC11
NOV 02 2004
PATENT & TRADEMARK OFFICE

FILE COPY
IPW
Kuhns

IN THE UNITED STATES PATENT AND TRADEMARK OFFICE

Art Unit	: 1761	**Customer No.: 035811**
Examiner	:	
Serial No.	: 10/796,348	Docket No.: 1033-04
Filed	: March 9, 2004	
Inventor	: Jacques Veillon	Confirmation No.: 1980
Title	: METHOD AND DEVICE FOR PRESERVING PERISHABLE PRODUCTS	Dated: October 28, 2004

PETITION TO MAKE SPECIAL
UNDER 37 C.F. R. § 1.102(d) – ACTUAL INFRINGEMENT

PETITION GRANTED
William Krynski
Special Program Examiner
TC 1700
2-10-05

Mail Stop Petition
Commissioner for Patents
P.O. Box 1450
Alexandria, VA 22313-1450

Sir:

Applicant hereby petitions under 37 C.F.R. §1.102(d) and MPEP 708.02(II) that the subject application be accorded special status and advanced in order of examination.

The requirements of 37 C.F.R. §1.102(d) and MPEP 708.02(II) are fulfilled as follows:

1. A check for the appropriate fee ($130.00) as set forth in 37 C.F.R. §1.17(h) is attached hereto.

2. There is at least one infringing product actually on the market. The infringing product is referred to by the name "Expandable Bowl Covers."

3. A rigid comparison of the alleged infringing product ("Expandable Bowl Covers") with the claims of this present application has been made, and in my opinion, some of the claims are unquestionably infringed.

4. A search of the prior art was made in a corresponding PCT application by the EPO. An Information Disclosure Statement (IDS) is filed concurrently herewith, and the publications listed on the IDS represent the results of the above-referenced search.

11/03/2004 HALI11 00000007 10796348
01 FC:1460 130.00 OP

UNITED STATES PATENT AND TRADEMARK OFFICE

Commissioner for Patents
United States Patent and Trademark Office
P.O. Box 1450
Alexandria, VA 22313-1450
www.uspto.gov

WOOD, PHILLIPS, KATZ, CLARK & MORTIMER
500 W. MADISON STREET
SUITE 3800
CHICAGO, IL 60661

COPY MAILED

JUL 3 1 2007

OFFICE OF PETITIONS

In re Application of	:
Bruce M. Mueller et al	:
Application No. 10/796,352	: DECISION GRANTING PETITION
Filed: March 9, 2004	: UNDER 37 CFR 1.313(c)(2)
Attorney Docket No. SEA0820P1271US	:

This is a decision on the petition, filed July 27, 2007, under 37 CFR 1.313(c)(2) to withdraw the above-identified application from issue after payment of the issue fee.

The petition is **GRANTED**.

The above-identified application is withdrawn from issue for consideration of a submission under 37 CFR 1.114 (request for continued examination). See 37 CFR 1.313(c)(2).

Petitioner is advised that the issue fee paid on June 17, 2007 in the above-identified application cannot be refunded. If, however, the above-identified application is again allowed, petitioner may request that it be applied towards the issue fee required by the new Notice of Allowance.[1]

Telephone inquiries should be directed to the undersigned at (571) 272-3218.

This matter is being referred to Technology Center AU 1732 for processing of the request for continued examination under 37 CFR 1.114 and for consideration of the Information Disclosure Statement.

Frances Hicks
Petitions Examiner
Office of Petitions

C:\Documents and Settings\fhicks\My Documents\470\july10\796352.wpd

---

[1] *The request to apply the issue fee to the new Notice may be satisfied by completing and returning the new Part B – Fee(s) Transmittal Form (along with any balance due at the time of submission). Petitioner is advised that the Issue Fee Transmittal Form must be completed and timely submitted to avoid abandonment.*

SPE RESPONSE FOR CERTIFICATE OF CORRECTION

Paper No.: _____

DATE : March 07, 2007

TO SPE OF : ART UNIT 3677

SUBJECT : Request for Certificate of Correction on Patent No.: **7150594 B2 – 10/796364**

A response is requested with respect to the accompanying request for a certificate of correction.

Please complete this form and return with file, within 7 days to:
Palm location **7580, Certificates of Correction Branch – South Tower – 9A22**
If response is for an IFW, **return to employee (named below) via PUBSCofC Team in MADRAS.**
With respect to the change(s) requested, correcting Office and/or Applicant's errors, should the patent read as shown in the certificate of correction (COCIN)? No new matter should be introduced, nor should the scope or meaning of the claims be changed.

Thank You For Your Assistance

Elisha Evans
Certificates of Correction Branch
Tel. No. 703-308-9390 EXT 110

The request for issuing the above-identified correction(s) is hereby:
Note your decision on the appropriate box.

- [x] **Approved** — **All** changes apply.
- [ ] **Approved in Part** — Specify below which changes **do not** apply.
- [ ] **Denied** — State the reasons for denial below.

Comments:

_____

_____

_____

_____

_____

SPE — 3677 Art Unit

UNITED STATES PATENT AND TRADEMARK OFFICE

UNITED STATES DEPARTMENT OF COMMERCE
United States Patent and Trademark Office
Address: COMMISSIONER FOR PATENTS
P.O. Box 1450
Alexandria, Virginia 22313-1450
www.uspto.gov

FLEIT GIBBONS GUTMAN BONGINI & BIANCO P.L.
ONE BOCA COMMERCE CENTER
551 NORTHWEST 77TH STREET, SUITE 111
BOCA RATON, FL 33487

Mail Date: 04/20/2010

Applicant	: James K. Kebinger	: DECISION ON REQUEST FOR
Patent Number	: 7647628	: RECALCULATION of PATENT
Issue Date	: 01/12/2010	: TERM ADJUSTMENT IN VIEW
Appliction No	: 10/796,372	: OF WYETH AND NOTICE OF INTENT TO
Filed	: 03/09/2004	: ISSUE CERTIFICATE OF CORRECTION
		:

The Request for Recalculation is **GRANTED** to the extent indicated.

The patent term adjustment has been determined to be **1553** days. The USPTO will *sua sponte* issue a certificate of correction reflecting the amount of PTA days determined by the recalculation.

Prior to the issuance of the certificate of correction, the USPTO will afford patentee an opportunity to be heard and request reconsideration. Accordingly, patentee has **one month or thirty (30) days**, whichever is longer, to file a request for reconsideration of this patent term adjustment calculation. See 35 U.S.C. 154(b)(3)(B)(ii) and 37 CFR 1.322(a)(4). No extensions of time will be granted under 37 CFR 1.136.

Patentee should use document code PET.OP if electronically filing a request for reconsideration of this patent term adjustment calculation. The patentee must also include the information required by 37 CFR 1.705(b)(2) and the fee required by 37 CFR 1.18(e). If patentee does not file a timely request for reconsideration of this patent term adjustment calculation including the information required by 37 CFR 1.705(b)(2) and the fee required by 37 CFR 1.18(e), the USPTO will issue a certificate of correction reflecting the PTA determination noted above.

Patentee should be aware that in order to preserve the right to review in the United States District Court for the District of Columbia of the USPTO patent term adjustment determination, patentee must ensure that he or she also take the steps required under 35 U.S.C. 154(b)(4)(A) in a timely manner. Nothing in the request for recalculation should be construed as providing an alternative time frame for commencing a civil action under 35 U.S.C. 154(b)(4)(A).

Any questions concerning this decision should be directed to the Office of Patent Legal Administration at 571-272-7702.

UNITED STATES PATENT AND TRADEMARK OFFICE

Commissioner for Patents
United States Patent and Trademark Office
P.O. Box 1450
Alexandria, VA 22313-1450
www.uspto.gov

SCHMEISER OLSEN & WATTS
22 CENTURY HILL DRIVE, SUITE 302
LATHAM, NY 12110

COPY MAILED
JUL 1 0 2006
OFFICE OF PETITIONS

In re Application of	:
Lawrence J. Friedman	: DECISION ON PETITION TO
Application No. 10/796,383	: WITHDRAW FROM RECORD
Filed: March 9, 2004	:
Attorney Docket No. FRIE-3722	:

This is a decision on the request to withdraw as attorney or agent of record under 37 C.F.R. § 1.36(b), filed October 6, 2005.

The request is **NOT APPROVED**.

A grantable request to withdraw as attorney/agent of record must be signed by every attorney/agent seeking to withdraw or contain a clear indication that one attorney is signing on behalf of another/others. A request to withdraw will not be approved unless at least 30 (thirty) days would remain between the date of approval and the later of the expiration date of a time to file a response or the expiration date of the maximum time period which can be extended under 37 C.F.R. § 1.136(a).

The request cannot be approved because no reasons for withdrawal have been provided. Without providing the reason for the requested withdrawal, the Office cannot determine whether practitioner's request is one of the mandatory or permissive reasons enumerated in 37 CFR 10.40. Any subsequent request must include the reason for withdrawal. Please note that there is a space provided on PTO/SB/83 (Request to Withdraw as Attorney or Agent) for supplying practitioner's reasons.

The record indicates that a non-final Office action was mailed on August 10, 2005, which set a three month shortened statutory period for reply. To date, the record fails to disclose that a reply has been timely received within the maximum period set for reply.

A courtesy copy of this decision is being mailed to the address noted on the request to withdraw and to the inventor, whose address is the same as the assignee of record in this file. If it is desired that counsel be appointed to prosecute this application, the appropriate power of attorney documentation or a request to change the address of record should be submitted. If submitted by an assignee, assignee must comply with the provisions of 37 CFR 3.73(b).

All future communications from the Office will continue to be directed to the above-listed address until otherwise notified by applicant.

Telephone inquiries concerning this decision should be directed to the undersigned at 571-272-3218.

Frances Hicks

Frances Hicks
Petitions Examiner
Office of Petitions

cc:

Friedman, Hirschen, Miller & Campito PC
131 State Street
P. O. Box 1041
Schenectady, NY 12301-1041

Lawrence J. Friedman
26A Leonardo Drive
Clifton Park, NY 12065

UNITED STATES PATENT AND TRADEMARK OFFICE

UNITED STATES DEPARTMENT OF COMMERCE
United States Patent and Trademark Office
Address: COMMISSIONER FOR PATENTS
P.O. Box 1450
Alexandria, Virginia 22313-1450
www.uspto.gov

APPLICATION NO.	FILING DATE	FIRST NAMED INVENTOR	ATTORNEY DOCKET NO.	CONFIRMATION NO.
10/796,394	03/09/2004	Takuya Tsukagoshi	890050.468	1892

500 7590 02/25/2008
SEED INTELLECTUAL PROPERTY LAW GROUP PLLC
701 FIFTH AVE
SUITE 5400
SEATTLE, WA 98104

EXAMINER
LAVARIAS, ARNEL C

ART UNIT	PAPER NUMBER
2872	

MAIL DATE	DELIVERY MODE
02/25/2008	PAPER

Please find below and/or attached an Office communication concerning this application or proceeding.

The time period for reply, if any, is set in the attached communication.

UNITED STATES PATENT AND TRADEMARK OFFICE

Commissioner for Patents
United States Patent and Trademark Office
P.O. Box 1450
Alexandria, VA 22313-1450
www.uspto.gov

In re Application of TAKUYA TSUKAGOSHI Serial No.: 10/796,394 Filed: March 9, 2004 For: HOLOGRAPHIC RECORDING AND REPRODUCING APPARTUS	: : : : : : :	DECISION ON PETITION UNDER 37 CFR 1.181

The petition filed on August 24, 2007, to request the entry of an amendment filed on July 25, 2007, after the filing of the Notice of Appeal but prior to the filing of the Appeal Brief, is treated as a Petition under 37 CFR 1.181.

The petition is **GRANTED**.

This application is being forwarded to the examiner for appropriate action consistent with this decision. The amendment filed on July 25, 2007 will be entered and the proposed claims (found in claims appendix b) filed in the supplemental Appeal Brief of November 13, 2007, and directed to the amended claims will be addressed in the Examiner's Answer.

Stephone B. Allen
SPE, Art Unit 2872

SEED INTELLECTUAL PROPERTY LAW GROUP PLLC
701 FIFTH AVE
SUITE 5400
SEATTLE WA 98104

UNITED STATES PATENT AND TRADEMARK OFFICE

COMMISSIONER FOR PATENTS
UNITED STATES PATENT AND TRADEMARK OFFICE
P.O. BOX 1450
ALEXANDRIA, VA 22313-1450
www.uspto.gov
DIW Oct-08

PHILIP S. JOHNSON
JOHNSON & JOHNSON
ONE JOHNSON & JOHNSON PLAZA
NEW BRUNSWICK NJ 08933-7003

COPY MAILED
OCT 14 2008
OFFICE OF PETITIONS

In re Application of	:	
Falotico et al.	:	DECISION ON PETITION
Application Number: 10/796397	:	
Filing Date: 03/09/2004	:	
Attorney Docket Number: CRD-5068	:	

This is a decision on the petition under 37 CFR 1.59(b), filed on August 18, 2008, requesting that an Unfair Competition Agreement (Corporate); Patent Agreement; Business Conduct Agreement, and Conflict of Interest Agreement submitted on with an amendment filed on April 2, 2008 be expunged.

The petition is **GRANTED-IN-PART**.

Petitioner asserts that the documents identified above were unintentionally submitted, and that the failure to return them would cause irreparable harm.

Petitioner therefore seeks to have these documents expunged from the file.

37 C.F.R. §1.59 sets forth:

§ 1.59 Expungement of information or copy of papers in application file.
(a)
(1) Information in an application will not be expunged, except as provided in paragraph (b) of this section.
(2) Information forming part of the original disclosure (i.e., written specification including the claims, drawings, and any preliminary amendment specifically incorporated into an executed oath or declaration under §§ 1.63 and 1.175) will not be expunged from the application file.
(b) An applicant may request that the Office expunge information, other than what is excluded by paragraph (a)(2) of this section, by filing a petition under this paragraph. Any petition to expunge information from an application must include the fee set forth in § 1.17(h) and establish to the satisfaction of the Director that the expungement of the information is appropriate in which case a notice granting the petition for expungement will be provided.

(c) Upon request by an applicant and payment of the fee specified in § 1.19(b), the Office will furnish copies of an application, unless the application has been disposed of (see §§ 1.53(e), (f) and (g)). The Office cannot provide or certify copies of an application that has been disposed of.

[48 FR 2710, Jan. 20, 1983, effective Feb. 27, 1983; 49 FR 554, Jan. 4, 1984, effective Apr. 1, 1984; 49 FR 48416, Dec. 12, 1984, effective Feb. 11, 1985; 50 FR 23123, May 31, 1985, effective Feb. 11, 1985; revised, 60 FR 20195, Apr. 25, 1995, effective June 8, 1995; revised, 62 FR 53131, Oct. 10, 1997, effective Dec. 1, 1997; para. (b) revised, 65 FR 54604, Sept. 8, 2000, effective Nov. 7, 2000; para. (b) revised, 68 FR 14332, Mar. 25, 2003, effective May 1, 2003; revised, 68 FR 38611, June 30, 2003, effective July 30, 2003]

The matter Petitioner wishes to have expunged does not form part of the original disclosure. Petitioner has included the fee associated with the filing of petition under 37 C.F.R. §1.59 and has established to the satisfaction of the Director that the expungement of this information is appropriate.

As such, the electronic documents which contain these pages have been closed in the Office's Image File Wrapper software viewing program. The paper documents will not be removed from the physical file however, as the Office does not remove papers from paper files which have been scanned.

The general phone number for the Office of Petitions, which should be used for status requests, is (571) 272-3282. Telephone inquiries regarding *this decision* should be directed to Senior Petitions Attorney Douglas I. Wood at (571) 272-3231.

Anthony Knight
Supervisor
Office of Petitions

UNITED STATES PATENT AND TRADEMARK OFFICE

Commissioner for Patents
United States Patent and Trademark Office
P.O. Box 1450
Alexandria, VA 22313-1450
www.uspto.gov

PAUL HASTINGS JANOFSKY AND WALKER LLP
P.O. BOX 919092
SAN DIEGO, CA 92191-9092

COPY MAILED
JUN 16 2006
OFFICE OF PETITIONS

In re Application of	:	
McKinzie, William E. III	:	DECISION ON PETITION
Application No. 10/796,398	:	TO WITHDRAW
Filed: March 8, 2004	:	FROM RECORD
Attorney Docket No. 39588.00002.UTL1	:	

This is a decision on the Request to Withdraw as attorney or agent of record under 37 C.F.R. § 1.36(b), filed August 4, 2005.

The request is **NOT APPROVED** as moot.

A review of the file record indicates that the power of attorney to the attorneys associated with Customer Number 36183 has been revoked by the assignee of the entire interest of the patent application. Accordingly, the request to withdraw under 37 C.F.R. § 1.36(b) is moot.

All future communications from the Office will continue to be directed to the below-listed address until otherwise notified by applicant.

Telephone inquires concerning this decision should be directed to Petitions Examiner Liana Chase at 571-272- 3206. All other inquires concerning either the examination or status of the application should be directed to the Technology Center.

David Bucci
Petitions Examiner
Office of Petitions

cc:

HELLER EHRMAN LLP
4350 LA JOLLA VILLAGE DRIVE #700
7TH FLOOR
SAN DIEGO CA 92122

UNITED STATES PATENT AND TRADEMARK OFFICE

COMMISSIONER FOR PATENTS
UNITED STATES PATENT AND TRADEMARK OFFICE
P.O. BOX 1450
ALEXANDRIA, VA 22313-1450
www.uspto.gov

TOWNSEND AND TOWNSEND AND CREW, LLP
TWO EMBARCADERO CENTER
EIGHTH FLOOR
SAN FRANCISCO, CA 94111-3834

COPY MAILED

DEC 0 2 2004

OFFICE OF PETITIONS

In re Application of :
Brown :
Filed: March 8, 2004 : ON PETITION
Application No. 10/796,423 :
Atty. Dkt. No.: 022195-1.00US :

This decision is in response to the "PETITION TO ACCEPT FORMAL DRAWINGS AND REINSTATE FILING DATE" filed October 4, 2004 and supplemented November 8, 2004, in response to the Notice of Incomplete Nonprovisional Application ("Notice") mailed September 23, 2004 to accord the above-identified application a filing date of March 8, 2004.

The application was filed March 8, 2004. The Notice indicated that the application had not been accorded a filing date because the application appeared to have been deposited without drawings as required under 35 USC 113, first sentence.

In response, the present petition was filed wherein petitioner argues that the application as deposited included 2 sheets of formal drawings. Petitioners have included as proof of mailing and proof of receipt of the 2 sheets of formal drawings a return postcard date stamped by the Office on March 8, 2004. A copy of 2 sheets of formal drawings depicting Figure 1 and Figure 2 purportedly filed with the application on March 8, 2004 was also supplied.

The original drawings sheets submitted with the application papers have not been located. However, in view of the evidence presented, the petition to accord the application a filing date of March 8, 2004 is GRANTED.

Since the original drawing sheet cannot be located in the Office, the copy supplied with the instant petition on November 8, 2004 will be used for examination purposes.

No petition fee is due in connection with this matter.

This application will be returned to the Office of Initial Patent Examination for further processing with a filing date of March 8, 2004.

Telephone inquiries related to this decision may be directed to the undersigned at (571) 272-3205.

Alesia M. Brown
Senior Petitions Attorney
Office of Petitions

UNITED STATES PATENT AND TRADEMARK OFFICE

Commissioner for Patents
United States Patent and Trademark Office
P.O. Box 1450
Alexandria, VA 22313-1450
www.uspto.gov

BATTELLE MEMORIAL INSTITUTE
ATTN: IP SERVICES, K1-53
P. O. BOX 999
RICHLAND, WA 99352

MAILED

MAR 25 2009

OFFICE OF PETITIONS

In re Application of :
Eric A. Nyberg, et al. :
Application No. 10/796,424 :
Filed: March 8, 2004 :
Attorney Docket No. 14185-B :

ON PETITION

This is a decision on the petition under 37 CFR 1.137(b), filed February 11, 2008, to revive the above-identified application.

The petition is **GRANTED**.

The application became abandoned for failure to timely reply within the meaning of 37 CFR 1.113 to the final Office action of May 17, 2007. It is noted that an amendment was filed on September 10, 2007. On January 16, 2008, a Notice of Abandonment was mailed. In response, on February 11, 2008, the present petition was filed. The proposed reply required for consideration of a petition to revive this application must be a Notice of Appeal (and appeal fee required by 37 CFR 1.17(b)), an amendment that *prima facie* places the application in condition for allowance, or the filing of a submission under 37 CFR 114 (RCE) or a continuing application under 37 CFR 1.53(b). See 711.03(c)(II)(A)(2). While a copy of the amendment filed September 10, 2007 was included with the petition on February 11, 2008, the amendment is considered non-responsive, since it did not place the application in condition for allowance. See the attached Advisory Action. On March 19, 2009, a Request for Continued Examination was filed.

The petition, as supplemented on March 19, 2009, satisfies the requirements of 37 CFR 1.137(b) in that petitioner has supplied (1) the reply in the form of a Request for Continued Examination (RCE) under 37 CFR 1.114 and fee of $810; (2) the petition fee of $1,540; and (3) an adequate statement of unintentional delay.

This application is being referred to Technology Center AU 1793 for processing of the RCE under 37 CFR 1.114 and for appropriate action by the Examiner in the normal course of business.

Telephone inquiries concerning this decision should be directed to the undersigned at (571) 272-3204. Inquiries relating to further prosecution should be directed to the Technology Center.

Sherry D. Brinkley
Petitions Examiner
Office of Petitions

Attachment

Advisory Action Before the Filing of an Appeal Brief	Application No.	Applicant(s)	
	10/796,424	NYBERG ET AL.	
	Examiner	Art Unit	
	NGOCLAN T. MAI	1793	

--The MAILING DATE of this communication appears on the cover sheet with the correspondence address --

THE REPLY FILED 10 September 2007 FAILS TO PLACE THIS APPLICATION IN CONDITION FOR ALLOWANCE.

1. ☒ The reply was filed after a final rejection, but prior to or on the same day as filing a Notice of Appeal. To avoid abandonment of this application, applicant must timely file one of the following replies: (1) an amendment, affidavit, or other evidence, which places the application in condition for allowance; (2) a Notice of Appeal (with appeal fee) in compliance with 37 CFR 41.31; or (3) a Request for Continued Examination (RCE) in compliance with 37 CFR 1.114. The reply must be filed within one of the following time periods:
   a) ☐ The period for reply expires _____months from the mailing date of the final rejection.
   b) ☒ The period for reply expires on: (1) the mailing date of this Advisory Action, or (2) the date set forth in the final rejection, whichever is later. In no event, however, will the statutory period for reply expire later than SIX MONTHS from the mailing date of the final rejection.
   Examiner Note: If box 1 is checked, check either box (a) or (b). ONLY CHECK BOX (b) WHEN THE FIRST REPLY WAS FILED WITHIN TWO MONTHS OF THE FINAL REJECTION. See MPEP 706.07(f).

Extensions of time may be obtained under 37 CFR 1.136(a). The date on which the petition under 37 CFR 1.136(a) and the appropriate extension fee have been filed is the date for purposes of determining the period of extension and the corresponding amount of the fee. The appropriate extension fee under 37 CFR 1.17(a) is calculated from: (1) the expiration date of the shortened statutory period for reply originally set in the final Office action; or (2) as set forth in (b) above, if checked. Any reply received by the Office later than three months after the mailing date of the final rejection, even if timely filed, may reduce any earned patent term adjustment. See 37 CFR 1.704(b).

NOTICE OF APPEAL

2. ☐ The Notice of Appeal was filed on _____. A brief in compliance with 37 CFR 41.37 must be filed within two months of the date of filing the Notice of Appeal (37 CFR 41.37(a)), or any extension thereof (37 CFR 41.37(e)), to avoid dismissal of the appeal. Since a Notice of Appeal has been filed, any reply must be filed within the time period set forth in 37 CFR 41.37(a).

AMENDMENTS

3. ☐ The proposed amendment(s) filed after a final rejection, but prior to the date of filing a brief, will not be entered because
   (a) ☐ They raise new issues that would require further consideration and/or search (see NOTE below);
   (b) ☐ They raise the issue of new matter (see NOTE below);
   (c) ☐ They are not deemed to place the application in better form for appeal by materially reducing or simplifying the issues for appeal; and/or
   (d) ☐ They present additional claims without canceling a corresponding number of finally rejected claims.
   NOTE: _____. (See 37 CFR 1.116 and 41.33(a)).
4. ☐ The amendments are not in compliance with 37 CFR 1.121. See attached Notice of Non-Compliant Amendment (PTOL-324).
5. ☐ Applicant's reply has overcome the following rejection(s): _____.
6. ☐ Newly proposed or amended claim(s) _____ would be allowable if submitted in a separate, timely filed amendment canceling the non-allowable claim(s).
7. ☒ For purposes of appeal, the proposed amendment(s): a) ☐ will not be entered, or b) ☒ will be entered and an explanation of how the new or amended claims would be rejected is provided below or appended.
   The status of the claim(s) is (or will be) as follows:
   Claim(s) allowed: _____.
   Claim(s) objected to: _____.
   Claim(s) rejected: *1-2, 4-6, 23, 26-27, 29-35, 37-39, 41-53, 152-156*.
   Claim(s) withdrawn from consideration: _____.

AFFIDAVIT OR OTHER EVIDENCE

8. ☐ The affidavit or other evidence filed after a final action, but before or on the date of filing a Notice of Appeal will not be entered because applicant failed to provide a showing of good and sufficient reasons why the affidavit or other evidence is necessary and was not earlier presented. See 37 CFR 1.116(e).
9. ☐ The affidavit or other evidence filed after the date of filing a Notice of Appeal, but prior to the date of filing a brief, will not be entered because the affidavit or other evidence failed to overcome all rejections under appeal and/or appellant fails to provide a showing a good and sufficient reasons why it is necessary and was not earlier presented. See 37 CFR 41.33(d)(1).
10. ☐ The affidavit or other evidence is entered. An explanation of the status of the claims after entry is below or attached.

REQUEST FOR RECONSIDERATION/OTHER

11. ☐ The request for reconsideration has been considered but does NOT place the application in condition for allowance because: _____.
12. ☐ Note the attached Information *Disclosure Statement*(s). (PTO/SB/08) Paper No(s). _____
13. ☐ Other: _____.

Amendment after final filed 9/10/07 was fully responsive. However upon further consideration the claims are not patentable in view of Chung, EP 456411 and U.S. Patent Nos. 5,064,463, 4,765,950, and 5,266,264. The rejections will be forth coming once applicant files an RCE.

UNITED STATES PATENT AND TRADEMARK OFFICE

Commissioner for Patents
United States Patent and Trademark Office
P.O. Box 1450
Alexandria, VA 22313-1450
www.uspto.gov

COPY MAILED

FEB 0 2 2007

OFFICE OF PETITIONS

Munck Butrus, P.C.
PO Drawer 800889
Dallas, Texas 75380

In re Application of
Whitten et al
Application No. 10/796,428
Filed: March 9, 2004

: LETTER REGARDING PTA

This decision is in response to Applicants' "GOOD FAITH AND CANDOR LETTER REGARDING PATENT TERM ADJUSTMENT)" filed on December 8, 2006 asserting that applicants believe that they received too much PTA at the time of the mailing of the notice of allowance.

The Office thanks applicants for their good faith and candor in bring this letter to the attention of the Office.

Applicants letter is **GRANTED.** The Office will adjust the amount of APPLICANT DELAY from 47 days to 148 days. Overall, the determination of PTA at time of mailing of notice of allowance is zero (0).[1]

Applicants assert that the amount of USPTO delay is one hundred and two (102) days and the amount of applicant delay is one hundred and forty-eight (148) days. Applicants assert that the Office failed to consider the "supplemental election" submission filed on February 12, 2006. Applicants assert that such delay should have been for a period of 108 days.

The Office agrees that too much PTA was awarded at the time of the mailing of the notice of allowance. The determinations of fifty-five days of Office delay is not accurate. The Office notes that the Office failed to enter into PALM that the response to the restriction requirement was noncompliant. Accordingly, the submission of a compliant election requirement on 2/13/2006 is considered a reduction under 37 CFR 1.704(c)(7).[2] The amount of delay is 108 days as noted by applicant in their letter regarding PTA. Accordingly, the amount of PTA asserted by applicants is persuasive.

---

[1]The Office acknowledges that if applicant delay is greater than Office delay then there will be zero adjustment to the 20-year term. A "negative balance" by applicant would not cause the Office to reduce the 20-year term.

[2]The reduction is considered an omission under 37 CFR 1.704(c)(7) rather than a supplemental reply under 37 CFR 1.704(c)(8).

Any additional delays in failing to issue the application within four months of the payment of the issue fee and other requirements being satisfied under 37 CFR 1.702(a)(4) will be added at the time of the issuance of the patent and notice will be mailed to applicants in the Issue Notification letter that is mailed approximately three weeks prior to issuance.

Because applicants have submitted this letter in response to good faith and candor, the Office will not assess any fees concerning the amount of Patent Term Adjustment.

Any questions concerning this determination should be directed to Kery Fries, Senior Legal Advisor, Office of Patent Legal Administration, Office of Deputy Commissioner for Patent Examination Policy at 571-272-7757.

Kery A, Fries
Senior Legal Advisor
Office of Patent Legal Administration
Office of Deputy Commissioner
for Patent Examination Policy

cc: Adjusted PAIR calculation

UNITED STATES PATENT AND TRADEMARK OFFICE

Commissioner for Patents
United States Patent and Trademark Office
P.O. Box 1450
Alexandria, VA 22313-1450
www.uspto.gov

PIETRAGALLO, BOSICK & GORDON LLP
ONE OXFORD CENTRE, 38TH FLOOR
301 GRANT STREET
PITTSBURGH PA 15219-6404

COPY MAILED

DEC 1 2 2007

OFFICE OF PETITIONS

In re Application of	:	
CRAIN et al.	:	
Application No. 10/796,440	:	DECISION ON PETITION
Filed: 03/09/2004	:	
Attorney Docket No. NORT 64197	:	

This is a decision on the petition under 37 CFR 1.181, filed October 8, 2007, to withdraw the holding of abandonment for the above-identified application.

On January 25, 2007, the Office mailed a non-final Office action, which set three-month shortened statutory period for reply. On September 26, 2007, the Office mailed a Notice of Abandonment, indicating the application was abandoned because no reply was received.

In the present petition, applicants asserted that they filed a timely reply. In support of the assertion, applicants submitted a copy of the reply and a copy of the Acknowledgement Receipt, indicating that the USPTO received the response on April 4, 2007.

Upon reviewing the record, the Office has located the reply in the form of an amendment in the Image File Wrapper filed on April 4, 2007. Accordingly, the reply is considered timely filed on April 4, 2007. The petition under 37 CFR 1.181 is **granted**. The holding of abandonment is hereby withdrawn. The application is restored to pending status as the reply was timely filed.

The matter is being referred to Technology Center Art Unit 2821 for a review of the reply filed on April 4, 2007.

Telephone inquiries concerning this decision may be directed to the undersigned at (571) 272-3211. All other questions regarding the status of the application or the examination procedures should be directed to the Technology Center.

C.T. Donnell

Christina Tartera Donnell
Senior Petitions Attorney
Office of Petitions

UNITED STATES PATENT AND TRADEMARK OFFICE

Commissioner for Patents
United States Patent and Trademark Office
P.O. Box 1450
Alexandria, VA 22313-1450
www.uspto.gov

COPY MAILED

MAR 2 2 2006

OFFICE OF PETITIONS

BUSH INTELLECTUAL PROPERTY LAW GROUP, LLC
P.O. BOX 381146
BIRMINGHAM, AL 35238

In re Application of	:	
Charles Harbison	:	
Application No. 10/796,443	:	DECISION GRANTING PETITION
Filed: March 9, 2004	:	UNDER 37 CFR 1.137(b)
Attorney Docket No. Harbison 1	:	

This is a decision on the petition, filed February 16, 2006, which is being treated as a petition under 37 CFR 1.137(b) to revive the instant nonprovisional application for failure to timely notify the U.S. Patent and Trademark (USPTO) of the filing of an application in a foreign country, or under a multinational treaty that requires publication of applications eighteen months after filing. *See* 37 CFR 1.137(f).

The petition is **GRANTED**.

Petitioner states that the instant nonprovisional application is the subject of an application filed in an eighteen month publication country on March 9, 2005. However, the USPTO was unintentionally not notified of this filing within 45 days subsequent to the filing of the subject application in an eighteen month publication country.

In view of the above, this application became abandoned pursuant to 35 U.S.C. § 122(b)(2)(B)(iii) and 37 CFR 1.213(c) for failure to timely notify the Office of the filing of an application in a foreign country or under a multilateral international agreement that requires publication of applications 18 months after filing.

A petition to revive an application abandoned pursuant to 35 U.S.C. 122(b)(2)(B)(iii) for failure to notify the USPTO of a foreign filing must be accompanied by:

(1) the required reply which is met by the notification of such filing in a foreign country or under a multinational treaty;
(2) the petition fee as set forth in 37 CFR 1.17(m); and
(3) a statement that the entire delay in filing the required reply from the due date of the reply until the filing of a grantable petition was unintentional.

The instant petition has been found to be in compliance with 37 CFR 1.137(b). Accordingly, the failure to timely notify the

USPTO of a foreign or international filing within 45 days after the date of filing of such foreign or international application as provided by 35 U.S.C. § 122(b)(2)(B)(iii) and 37 CFR 1.213(c) is accepted as having been unintentionally delayed.

The previous Request and Certification under 35 U.S.C. § 122(b)(2)(B)(i) has been rescinded. A Notice Regarding Rescission of Nonpublication Request which sets forth the projected publication date of June 29, 2006, accompanies this decision on petition.

Any inquiries concerning this decision may be directed to the undersigned at (571) 272-3208.

This matter is being referred to Technology Center Art Unit 3634.

Karen Creasy

Karen Creasy
Petitions Examiner
Office of Petitions
Office of the Deputy Commissioner
for Patent Examination Policy

ATTACHMENT: Notice Regarding Rescission of Nonpublication Request

UNITED STATES PATENT AND TRADEMARK OFFICE

Commissioner for Patents
United States Patent and Trademark Office
P.O. Box 1450
Alexandria, VA 22313-1450
www.uspto.gov

BAKER & BOTTS
30 ROCKEFELLER PLAZA
NEW YORK NY 10112

COPY MAILED

AUG 31 2005

OFFICE OF PETITIONS

In re Application of	:	
Wayne Cohen	:	
Application No. 10/796,446	:	DECISION GRANTING PETITION
Filed: March 9, 2004	:	UNDER 37 CFR 1.137(b)
Attorney Docket No.03395/US/3-475494-00005	:	

This is a decision on the petition under 37 CFR 1.137(b), filed July 25, 2005, to revive the above-identified application.

The petition is **GRANTED**.

The petition satisfies the conditions for revival pursuant to the provisions of 37 CFR 1.137(b) in that (1) the reply in the form of an Appeal Brief and an amendment; (2) the petition fee; and (3) the required statement of unintentional delay have been received. Accordingly, the reply is accepted as having been unintentionally delayed.

The file does not indicate a change of address has been submitted, although the address given on the petition differs from the address of record. If appropriate, a change of address should be filed in accordance with MPEP 601.03. A courtesy copy of this decision is being mailed to the address given on the petition; however, the Office will mail all future correspondence solely to the address of record.

Telephone inquiries concerning this decision should be directed to the undersigned at (571) 272-3208.

This matter is being referred to Technology Center AU 3723.

Karen Creasy

Karen Creasy
Petitions Examiner
Office of Petitions
Office of the Deputy Commissioner
for Patent Examination Policy

cc:
GARY ABELEV
DORSEY & WHITNEY
250 PARK AVENUE
NEW YORK NY 10177

UNITED STATES PATENT AND TRADEMARK OFFICE

Commissioner for Patents
United States Patent and Trademark Office
P.O. Box 1450
Alexandria, VA 22313-1450
www.uspto.gov

DORSEY & WHITNEY LLP
INTELLECTUAL PROPERTY DEPARTMENT
250 PARK AVENUE
NEW YORK NY 10177

COPY MAILED
OCT 1 0 2006
OFFICE OF PETITIONS

In re Application of	:	
COHEN	:	
Application No. 10/796,446	:	DECISION ON PETITION
Filed: March 09, 2004	:	TO WITHDRAW
Attorney Docket No. A33956-A 072708.0362	:	FROM RECORD
	:	

This is a decision on the Request to Withdraw as attorney or agent under 37 C.F.R. § 1.36(b) or 37 C.F.R. § 10.40 filed July 05, 2006.

The request is **APPROVED**.

A review of the file record indicates that DORSEY & WHITNEY LLP: (1) does not have power of attorney in this patent application; and (2) has been employed or otherwise engaged in the proceedings in this patent application. In view of the present decision, DORSEY & WHITNEY LLP have been withdrawn from the present application and may not prepare or submit papers under 37 C.F.R. § 1.34, or correspond in any manner in this application unless appointed in an acceptable power of attorney under 37 C.F.R. § 1.32(b).

The Notice of Acceptance of Power of Attorney and the Notice Regarding Change of Power of Attorney mailed on 9/22/2005 were mailed in error. There is no request in the file to change the Power of Attorney.

All future communications from the Office will continue to be directed to the first copied address below.

Telephone inquires concerning this decision should be directed to Patricia Volpe at 571-272-6825.

for David Bucci
Petitions Examiner
Office of Petitions

cc: BAKER & BOTTS
30 ROCKEFELLER PLAZA
44TH FLOOR
NEW YORK NY 10112

cc: Wayne Cohen
Managing Director
Bongo Logic Co., Ltd.
44 Convent Road
Silom Bangrak, Bankok
THAILAND 10500

UNITED STATES PATENT AND TRADEMARK OFFICE

COMMISSIONER FOR PATENTS
UNITED STATES PATENT AND TRADEMARK OFFICE
P.O. BOX 1450
ALEXANDRIA, VA 22313-1450
www.uspto.gov

TOWNSEND AND TOWNSEND AND CREW, LLP
TWO EMBARCADERO CENTER
EIGHTH FLOOR
SAN FRANCISCO, CA 94111-3834

MAILED

DEC 14 2005

Technology Center 2100

In re Application of YAGAWA et al	:	
Application No.: 10/796,454	:	DECISION ON PETITION
Filing Date: March 8, 2004	:	FOR ACCELERATED
For: POINT IN TIME REMOTE COPY FOR	:	EXAMINATION UNDER
MULTIPLE SITES	:	M.P.E.P. §708.02(VIII)
	:	

This is a decision on the petition filed October 24, 2005 under 37 CFR §1.102(d) and M.P.E.P. §708.02(VIII): Accelerated Examination, to make the above-identified application special.

The petition is **GRANTED**.

M.P.E.P. §708.02, Section VIII, which sets out the prerequisites for a grantable petition for Accelerated Examination under 37 CFR §1.102(d), states in relevant part:

> A new application (one which has not received any examination by the examiner) may be granted special status provided that applicant (and this term includes applicant's attorney or agent) complies with each of the following items:
>
> (A) Submits a petition to make special accompanied by the fee set forth in 37 CFR 1.17(h);
>
> (B) Presents all claims directed to a single invention, or if the Office determines that all the claims presented are not obviously directed to a single invention, will make an election without traverse as a prerequisite to the grant of special status. The election may be made by applicant at the time of filing the petition for special status. Should applicant fail to include an election with the original papers or petition and the Office determines that a requirement should be made, the established telephone restriction practice will be followed. If otherwise proper, examination on the merits will proceed on claims drawn to the elected invention. If applicant refuses to make an election without traverse, the application will not be further examined at that time. The petition will be denied on the ground that the claims are not directed to a single invention, and the application will await action in its regular turn. Divisional applications directed to the nonelected inventions will not automatically be given special status based on papers filed with the petition in the parent application. Each such application must meet on its own all requirements for the new special status;

(C) Submits a statement(s) that a pre-examination search was made, listing the field of search by class and subclass, publication, Chemical Abstracts, foreign patents, etc. >The pre-examination search must be directed to the invention as claimed in the application for which special status is requested.< A search made by a foreign patent office satisfies this requirement >if the claims in the corresponding foreign application are of the same or similar scope to the claims in the U.S. application for which special status is requested<;

(D) Submits one copy each of the references deemed most closely related to the subject matter encompassed by the claims if said references are not already of record; and

(E) Submits a detailed discussion of the references, which discussion points out, with the particularity required by 37 CFR 1.111 (b) and (c), how the claimed subject matter is patentable over the references.

Because the petition filed October 24, 2005 meets the criteria set forth above, the petition to make special is **GRANTED**.

The application file is being forwarded to the Examiner for accelerated examination in accordance with M.P.E.P. §708.02, Section VIII. If the application is subsequently allowed, it will be given priority for printing. See M.P.E.P. §1309.

Pinchus M. Laufer

Pinchus M. Laufer
Special Programs Examiner
Technology Center 2100
Computer Architecture, Software, and Information Security
571-272-3599

UNITED STATES PATENT AND TRADEMARK OFFICE

Commissioner for Patents
United States Patent and Trademark Office
P.O. Box 1450
Alexandria, VA 22313-1450
www.uspto.gov
rOMA

ROMAN DUBROVSKY
4525 HENRY HUDSON PARKWAY
APT. B701
BRONX, NY 10471

COPY MAILED

NOV 0 8 2006

OFFICE OF PETITIONS

In re Application of	:	
Roman Dubrovsky et al	:	
Application No. 10/796,458	:	DECISION ON PETITION
Filed: March 9, 2004	:	UNDER 37 CFR 1.78(a)(6)
Attorney Docket No. NJIT-3P	:	

This is a decision on the petition under 37 CFR 1.78(a)(6), filed March 9, 2006, to accept an unintentionally delayed claim under 35 U.S.C. §119(e) for the benefit of prior-filed provisional Application No. 60/453,805, filed March 11, 2003, as set forth in the concurrently filed amendment.

The petition is **DISMISSED.**

A petition under 37 CFR 1.78(a)(6) is only applicable to those applications filed on or after November 29, 2000. Further, the petition is appropriate only after expiration of the period specified in 37 CFR 1.78(a)(5)(ii) and must be filed during the pendency of the nonprovisional application. In addition, the petition must be accompanied by:

(1) the reference required by 35 U.S.C. § 119(e) and 37 CFR 1.78(a)(5)(i) to the prior-filed application, unless previously submitted;
(2) the surcharge set forth in § 1.17(t); and
(3) a statement that the entire delay between the date the claim was due under 37 CFR 1.78(a)(5)(ii) and the date the claim was filed was unintentional. The Director may require additional information where there is a question whether the delay was unintentional.

Additionally, the instant nonprovisional application must be pending at the time of filing of the reference to the prior-filed provisional application as required by 37 CFR 1.78(a)(5)(ii). Further, the nonprovisional application claiming the benefit of the prior-filed provisional application must have been filed within twelve months of the filing date of the prior-filed provisional application.

The petition does not satisfy item (3) above. In this regard, the statement of unintentional delay is unsigned and is therefore unacceptable. Petitioner's attention is directed to 37 CFR 1.33(b), which states.

> *Amendments and other papers*. Amendments and other papers, except for written assertions pursuant to § 1.27(c)(2)(ii) of this part, filed in the application must be signed by:
> (1) A registered practitioner appointed in compliance with § 1.32(b);
> (2) A registered practitioner not of record who acts in a representative capacity under the provisions of § 1.34;
> (3) An assignee as provided for under § 3.71(b) of this chapter; or
> (4) **All of the applicants (§ 1.41(b)) for patent, unless there is an assignee of the entire interest and such assignee has taken action in the application in accordance with § 3.71 of this chapter [emphasis added].**

Additional attention is directed to 37 CFR 1.4(d)(1), which states:

> (d)(1) Handwritten signature. Each piece of correspondence, except as provided in paragraphs (d)(2), (d)(3), (e) and (f) of this section, filed in an application, patent file, or other proceeding in the Office which requires a person's signature, must:
> (i) Be an original, that is, have an original handwritten signature personally signed, in permanent dark ink or its equivalent, by that person; or
> (ii) Be a direct or indirect copy, such as a photocopy or facsimile transmission (§ 1.6(d)), of an original. In the event that a copy of the original is filed, the original should be retained as evidence of authenticity. If a question of authenticity arises, the Office may require submission of the original.

An unsigned amendment (or other paper) or one not properly signed by a person having authority to prosecute the application is not entered. This applies, for instance, where the amendment (or other paper) is signed by only one of two applicants and the one signing has not been given a power of attorney by the other applicant.

Therefore, as the petition containing the statement of unintentional delay is not signed by all the inventors and the record herein fails to disclose that petitioner herein (Roman Dubrovsky) was ever given a power of attorney to act on behalf of the other inventor, **or that he is an assignee of the entire interest and has complied with the provisions of 37 CFR 3.73(b)**, the petition is considered to not contain a proper statement of unintentional delay. In view of the above, a renewed petition under 37 CFR 1.78(a)(6) signed by all the inventors of record or in compliance with 37 CFR 1.4(d)(1), (d)(2), (d)(3), (e) and (f), or, if petitioner herein is the assignee of the entire right, title and interest in this application, a proper statement satisfying the provisions of 37 CFR 3.73(b), must be submitted if petitioners desire to claim the benefit of the above-noted provisional application.

It is likewise noted that the reply to the non-final Office action of December 15, 2005 does not contain the signature of the inventors in compliance with 37 CFR 1.33(b) and 1.4, as noted *supra*.

Further correspondence with respect to this matter should be addressed as follows:

By mail: Mail Stop PETITION
Commissioner for Patents
Post Office Box 1450
Alexandria, VA 22313-1450

By hand: Customer Service Window
Mail Stop Petitions
Randolph Building
401 Dulany Street
Alexandria, VA 22314

By fax: (571) 273-8300
ATTN: Office of Petitions

Any questions concerning this matter may be directed to the undersigned at (571) 272-3218.

Frances Hicks
Petitions Examiner
Office of Petitions

UNITED STATES PATENT AND TRADEMARK OFFICE

COMMISSIONER FOR PATENTS
UNITED STATES PATENT AND TRADEMARK OFFICE
P.O. BOX 1450
ALEXANDRIA, VA 22313-1450
www.uspto.gov
rOMA

ROMAN DUBROVSKY
4525 HENRY HUDSON PARKWAY
APT. B701
BRONX, NY 10471

COPY MAILED

JAN 12 2007

OFFICE OF PETITIONS

In re Application of	:	
Roman Dubrovsky et al	:	
Application No. 10/796,458	:	DECISION ON PETITION
Filed: March 9, 2004	:	UNDER 37 CFR 1.78(a)(6)
Attorney Docket No. NJIT-3P	:	

This is a decision on the renewed petition under 37 CFR 1.78(a)(6), filed December 26, 2006, to accept an unintentionally delayed claim under 35 U.S.C. §119(e) for the benefit of prior-filed provisional Application No. 60/453,805, filed March 11, 2003, as set forth in the amendment filed March 9, 2006.

The petition is **GRANTED.**

A petition under 37 CFR 1.78(a)(6) is only applicable to those applications filed on or after November 29, 2000. Further, the petition is appropriate only after expiration of the period specified in 37 CFR 1.78(a)(5)(ii) and must be filed during the pendency of the nonprovisional application. In addition, the petition must be accompanied by:

(1) the reference required by 35 U.S.C. § 119(e) and 37 CFR 1.78(a)(5)(i) to the prior-filed application, unless previously submitted;
(2) the surcharge set forth in § 1.17(t); and
(3) a statement that the entire delay between the date the claim was due under 37 CFR 1.78(a)(5)(ii) and the date the claim was filed was unintentional. The Director may require additional information where there is a question whether the delay was unintentional.

Additionally, the instant nonprovisional application must be pending at the time of filing of the reference to the prior-filed provisional application as required by 37 CFR 1.78(a)(5)(ii). Further, the nonprovisional application claiming the benefit of the prior-filed provisional application must have been filed within twelve months of the filing date of the prior-filed provisional application.

All of the above requirements having been satisfied, the late claim for benefit of priority under 35 U.S.C. § 119(e) is accepted as being unintentionally delayed.

The granting of the petition to accept the delayed benefit claim to the prior-filed application under 37 CFR 1.78(a)(6) should not be construed as meaning that this application is entitled to the benefit of the filing date of the prior-filed application. In order for this application to be entitled to

the benefit of the prior-filed application, all other requirements under 35 U.S.C. §119(e) and 37 CFR 1.78(a)(4) and (a)(5) must be met. Similarly, the fact that the corrected Filing Receipt accompanying this decision on petition includes the prior-filed application should not be construed as meaning that applicant is entitled to the claim for benefit of priority to the prior-filed application noted thereon. Accordingly, the examiner will, in due course, consider this benefit claim and determine whether the application is entitled to the benefit of the earlier filing date.

A corrected Filing Receipt, which includes the priority claim to the prior-filed provisional application, accompanies this decision on petition.

The file does not indicate a change of address has been submitted, although the address given on the renewed petition differs from the address of record. If appropriate, a change of address should be filed in accordance with MPEP 601.03. A courtesy copy of this decision is being mailed to the address given on the renewed petition; however, the Office will mail all future correspondence solely to the above-noted address of record.

Any inquiries concerning this decision may be directed to the undersigned at (571) 272-3218. All other inquiries concerning either the examination procedures or status of the application should be directed to the Technology Center.

The application is being forwarded to Technology Center AU 1754 for consideration by the examiner of the claim under 35 U.S.C. §119(e) for the benefit of priority to the prior-filed provisional application.

Frances Hicks

Frances Hicks
Petitions Examiner
Office of Petitions

cc:

Valeriy Bezmelnitsyn
1032 Dibrell Alley, Apt. #1
Danville, VA 24541

ATTACHMENT: Corrected Filing Receipt

UNITED STATES PATENT AND TRADEMARK OFFICE

UNITED STATES DEPARTMENT OF COMMERCE
United States Patent and Trademark Office
Address: COMMISSIONER FOR PATENTS
P.O. Box 1450
Alexandria, Virginia 22313-1450
www.uspto.gov

APPL NO.	FILING OR 371 (c) DATE	ART UNIT	FIL FEE REC'D	ATTY.DOCKET NO	DRAWINGS	TOT CLMS	IND CLMS
10/796,458	03/09/2004	1754	385	NJIT-3P	7	17	3

CONFIRMATION NO. 2605

CORRECTED FILING RECEIPT

OC000000021961957

Roman Dubrovsky
4525 Henry Hudson Prkwy, Apt. B701
Bronx, NY 10471

Date Mailed: 01/11/2007

Receipt is acknowledged of this regular Patent Application. It will be considered in its order and you will be notified as to the results of the examination. Be sure to provide the U.S. APPLICATION NUMBER, FILING DATE, NAME OF APPLICANT, and TITLE OF INVENTION when inquiring about this application. Fees transmitted by check or draft are subject to collection. Please verify the accuracy of the data presented on this receipt. **If an error is noted on this Filing Receipt, please mail to the Commissioner for Patents P.O. Box 1450 Alexandria Va 22313-1450. Please provide a copy of this Filing Receipt with the changes noted thereon. If you received a "Notice to File Missing Parts" for this application, please submit any corrections to this Filing Receipt with your reply to the Notice. When the USPTO processes the reply to the Notice, the USPTO will generate another Filing Receipt incorporating the requested corrections (if appropriate).**

Applicant(s)

Roman Dubrovsky, Dec'd., Bronx, NY;
Valeriy Bezmelnitsyn, East Newark, NJ;

Power of Attorney: None

Domestic Priority data as claimed by applicant

This appln claims benefit of 60/453,805 03/11/2003

Foreign Applications

If Required, Foreign Filing License Granted: 06/22/2004

The country code and number of your priority application, to be used for filing abroad under the Paris Convention, is US10/796,458

Projected Publication Date: Not Applicable

Non-Publication Request: No

Early Publication Request: No

**** SMALL ENTITY ****

Title

Method and apparatus for carbon allotropes synthesis

Preliminary Class

502

PROTECTING YOUR INVENTION OUTSIDE THE UNITED STATES

Since the rights granted by a U.S. patent extend only throughout the territory of the United States and have no effect in a foreign country, an inventor who wishes patent protection in another country must apply for a patent in a specific country or in regional patent offices. Applicants may wish to consider the filing of an international application under the Patent Cooperation Treaty (PCT). An international (PCT) application generally has the same effect as a regular national patent application in each PCT-member country. The PCT process **simplifies** the filing of patent applications on the same invention in member countries, but **does not result** in a grant of "an international patent" and does not eliminate the need of applicants to file additional documents and fees in countries where patent protection is desired.

Almost every country has its own patent law, and a person desiring a patent in a particular country must make an application for patent in that country in accordance with its particular laws. Since the laws of many countries differ in various respects from the patent law of the United States, applicants are advised to seek guidance from specific foreign countries to ensure that patent rights are not lost prematurely.

Applicants also are advised that in the case of inventions made in the United States, the Director of the USPTO must issue a license before applicants can apply for a patent in a foreign country. The filing of a U.S. patent application serves as a request for a foreign filing license. The application's filing receipt contains further information and guidance as to the status of applicant's license for foreign filing.

Applicants may wish to consult the USPTO booklet, "General Information Concerning Patents" (specifically, the section entitled "Treaties and Foreign Patents") for more information on timeframes and deadlines for filing foreign patent applications. The guide is available either by contacting the USPTO Contact Center at 800-786-9199, or it can be viewed on the USPTO website at http://www.uspto.gov/web/offices/pac/doc/general/index.html.

For information on preventing theft of your intellectual property (patents, trademarks and copyrights), you may wish to consult the U.S. Government website, http://www.stopfakes.gov. Part of a Department of Commerce initiative, this website includes self-help "toolkits" giving innovators guidance on how to protect intellectual property in specific countries such as China, Korea and Mexico. For questions regarding patent enforcement issues, applicants may call the U.S. Government hotline at 1-866-999-HALT (1-866-999-4158).

LICENSE FOR FOREIGN FILING UNDER
Title 35, United States Code, Section 184
Title 37, Code of Federal Regulations, 5.11 & 5.15

GRANTED

The applicant has been granted a license under 35 U.S.C. 184, if the phrase "IF REQUIRED, FOREIGN FILING LICENSE GRANTED" followed by a date appears on this form. Such licenses are issued in all applications where the conditions for issuance of a license have been met, regardless of whether or not a license may be required as set forth in 37 CFR 5.15. The scope and limitations of this license are set forth in 37 CFR 5.15(a) unless an earlier license has been issued under 37 CFR 5.15(b). The license is subject to revocation upon written notification. The date indicated is the effective date of the license, unless an earlier license of similar scope has been granted under 37 CFR 5.13 or 5.14.

This license is to be retained by the licensee and may be used at any time on or after the effective date thereof

unless it is revoked. This license is automatically transferred to any related applications(s) filed under 37 CFR 1.53(d). This license is not retroactive.

The grant of a license does not in any way lessen the responsibility of a licensee for the security of the subject matter as imposed by any Government contract or the provisions of existing laws relating to espionage and the national security or the export of technical data. Licensees should apprise themselves of current regulations especially with respect to certain countries, of other agencies, particularly the Office of Defense Trade Controls, Department of State (with respect to Arms, Munitions and Implements of War (22 CFR 121-128)); the Bureau of Industry and Security, Department of Commerce (15 CFR parts 730-774); the Office of Foreign Assets Control, Department of Treasury (31 CFR Parts 500+) and the Department of Energy.

NOT GRANTED

No license under 35 U.S.C. 184 has been granted at this time, if the phrase "IF REQUIRED, FOREIGN FILING LICENSE GRANTED" DOES NOT appear on this form. Applicant may still petition for a license under 37 CFR 5.12, if a license is desired before the expiration of 6 months from the filing date of the application. If 6 months has lapsed from the filing date of this application and the licensee has not received any indication of a secrecy order under 35 U.S.C. 181, the licensee may foreign file the application pursuant to 37 CFR 5.15(b).

UNITED STATES PATENT AND TRADEMARK OFFICE

Commissioner for Patents
United States Patent and Trademark Office
P.O. Box 1450
Alexandria, VA 22313-1450
www.uspto.gov

MARK LYKAM
P.O. BOX 331
CHELMSFORD, MA 01824

COPY MAILED
SEP 15 2006
OFFICE OF PETITIONS

In re Application of Mark Lykam Application No. 10/796,490 Filed: March 4, 2004 Attorney Docket No. N/A	: : : : :	ON PETITION

This is a decision on the petition under 37 CFR 1.137(b), filed July 6, 2006 and supplemented on August 4, 2006, to revive the above-identified application.

The petition is **DISMISSED**.

The application became abandoned for failure to reply in a timely manner to the non-final Office action mailed January 4, 2005. A Notice of Abandonment was mailed on November 8, 2005.

A grantable petition under 37 CFR 1.137(b) must be accompanied by: (1) the required reply, unless previously filed; (2) the petition fee as set forth in 37 CFR 1.17(m); (3) a statement that the entire delay in filing the required reply from the due date for the reply until the filing of a grantable petition pursuant to 37 CFR 1.137(b) was unintentional; and (4) any terminal disclaimer (and fee as set forth in 37 CFR 1.20(d)) required by 37 CFR 1.137(d). Where there is a question as to whether either the abandonment or the delay in filing a petition under 37 CFR 1.137 was unintentional, the Commissioner may require additional information. See MPEP 711.03(c)(III)(C) and (D). The instant petition lacks item(s) (1).

With respect to item (1), the record fails to show that petitioner submitted the required reply to the non-final Office action mailed January 4, 2005. Therefore, revival of the above application cannot occur until a response to the non-final Office action has been received.

Any request for reconsideration of this decision must be submitted within **TWO (2) MONTHS** from the mail date of this decision. Extensions of time under 37 CFR 1.136(a) are permitted. The reconsideration request should include a cover letter entitled "Renewed Petition under 37 CFR 1.137(b)." This is **not** a final agency action within the meaning of 5 U.S.C. § 704.

Further correspondence with respect to this matter should be addressed as follows:

By Mail: Mail Stop PETITION
Commissioner for Patents
P. O. Box 1450
Alexandria, VA 22313-1450

By hand: U. S. Patent and Trademark Office
Customer Service Window, Mail Stop Petitions
Randolph Building
401 Dulany Street
Alexandria, VA 22314

The centralized facsimile number is **(571) 273-8300.**

Telephone inquiries concerning this decision should be directed to the undersigned at (571) 272-3226.

Andrea Smith
Petitions Examiner
Office of Petitions

UNITED STATES PATENT AND TRADEMARK OFFICE

COMMISSIONER FOR PATENTS
UNITED STATES PATENT AND TRADEMARK OFFICE
P.O. BOX 1450
ALEXANDRIA, VA 22313-1450
www.uspto.gov

MARK LYKAM
P.O. BOX 331
CHELMSFORD, MA 01824

COPY MAILED
OCT 0 4 2006
OFFICE OF PETITIONS

In re Application of	:	
Mark Lykam	:	
Application No. 10/796,490	:	ON PETITION
Filed: March 4, 2004	:	
Attorney Docket No. N/A	:	

This is a decision on the communication filed by facsimile transmission on September 18, 2006, which is being treated as a renewed petition under 37 CFR 1.137(b), to revive the above-identified application.

The petition now satisfies the requirements of 37 CFR 1.137(b) in that petitioner has supplied (1) the reply in the form of an amendment/drawings; (2) the petition fee of $750; and (3) an adequate statement of unintentional delay. Therefore, the petition is **GRANTED**.

Petitioner is advised that the granting of this petition under 37 CFR 1.137 is not a determination that any reply under 37 CFR 1.111 is complete. After revival of the application, the patent examiner may determine that the reply is lacking in some respect. In this limited situation, the patent examiner will send out a letter giving a 1-month shortened statutory period under 37 CFR 1.135(c) for correction of the error or omission. Extensions of time under 37 CFR 1.136(a) are permitted. If petitioner fails to correct the omission within the time period set in the letter (including any extension), the above application will again become abandoned. *See MPEP 711.03(c).*

This application file is being referred to Technology Center Art Unit 3724, for review of the amendment/drawings filed with the instant petition.

Telephone inquiries concerning this decision should be directed to the undersigned at (571) 272-3226.

Andrea Smith
Petitions Examiner
Office of Petitions

UNITED STATES PATENT AND TRADEMARK OFFICE

UNITED STATES DEPARTMENT OF COMMERCE
United States Patent and Trademark Office
Address: COMMISSIONER FOR PATENTS
P.O. Box 1450
Alexandria, Virginia 22313-1450
www.uspto.gov

RALPH E. JOCKE
Walker & Jocke
231 SOUTH BROADWAY
MEDINA, OH 44256

Mail Date: 04/21/2010

Applicant	: Jeffery M. Enright	: DECISION ON REQUEST FOR
Patent Number	: 7583290	: RECALCULATION of PATENT
Issue Date	: 09/01/2009	: TERM ADJUSTMENT IN VIEW
Appliction No	: 10/796,506	: OF WYETH AND NOTICE OF INTENT TO
Filed	: 03/09/2004	: ISSUE CERTIFICATE OF CORRECTION
		:

The Request for Recalculation is **GRANTED** to the extent indicated.

The patent term adjustment has been determined to be **1340** days. The USPTO will *sua sponte* issue a certificate of correction reflecting the amount of PTA days determined by the recalculation.

Prior to the issuance of the certificate of correction, the USPTO will afford patentee an opportunity to be heard and request reconsideration. Accordingly, patentee has **one month or thirty (30) days**, whichever is longer, to file a request for reconsideration of this patent term adjustment calculation. See 35 U.S.C. 154(b)(3)(B)(ii) and 37 CFR 1.322(a)(4). No extensions of time will be granted under 37 CFR 1.136.

Patentee should use document code PET.OP if electronically filing a request for reconsideration of this patent term adjustment calculation. The patentee must also include the information required by 37 CFR 1.705(b)(2) and the fee required by 37 CFR 1.18(e). If patentee does not file a timely request for reconsideration of this patent term adjustment calculation including the information required by 37 CFR 1.705(b)(2) and the fee required by 37 CFR 1.18(e), the USPTO will issue a certificate of correction reflecting the PTA determination noted above.

Patentee should be aware that in order to preserve the right to review in the United States District Court for the District of Columbia of the USPTO patent term adjustment determination, patentee must ensure that he or she also take the steps required under 35 U.S.C. 154(b)(4)(A) in a timely manner. Nothing in the request for recalculation should be construed as providing an alternative time frame for commencing a civil action under 35 U.S.C. 154(b)(4)(A).

Any questions concerning this decision should be directed to the Office of Patent Legal Administration at 571-272-7702.

UNITED STATES PATENT AND TRADEMARK OFFICE

Commissioner for Patents
United States Patent and Trademark Office
P.O. Box 1450
Alexandria, VA 22313-1450
www.uspto.gov

JUL 29 2004

DCM

In re Application of Frank M. Keese, et al. Serial Number: 10/796,534 Filed: March 9, 2004 For: BELTS WITH INTEGRAL FLIGHTS FOR USE IN HIGH-TEMPERATURE FOOD PROCESSING EQUIPMENT AND SYSTEMS INCLUDING SUCH BELTS	:	PETITION UNDER M.P.E.P.708.02 IV

This is in response to the petition filed March 9, 2004, requesting that the above-identified application be granted Special Status under Section 708.02 IV of the MPEP and 37 CFR 1.102(c) **(no fee required)**.

The request for Special Status considered under Section 708.02 IV of the MPEP is granted because criteria under 37 CFR 1.102(c) has been met.

Accordingly the petition is **GRANTED.**

Marian C. Knode

Marian C. Knode, Special Programs Examiner
Technology Center 1700
Chemical and Materials Engineering

FOLEY & LARDNER
777 EAST WISCONSIN AVENUE
SUITE 3800
MILWAUKEE WI 53202-5308

UNITED STATES PATENT AND TRADEMARK OFFICE

Commissioner for Patents
United States Patent and Trademark Office
P.O. Box 1450
Alexandria, VA 22313-1450
www.uspto.gov

SCHWEGMAN, LUNDBERG &
WOESSNER/WMS GAMING
P.O. BOX 2938
MINNEAPOLIS MN 55402

COPY MAILED

JAN 14 2009

OFFICE OF PETITIONS

In re Application of

Blackburn, et al.

Application No. 10/796,553

Filed: March 8, 2004

Attorney Docket No. 1842.026US1

DECISION ON PETITION

This is a decision on the petition to withdraw the holding of abandonment under 37 CFR 1.181(a), filed January 7, 2009.

The petition is **granted**.

This application was held abandoned July 17, 2008, after no reply was received to the non-final Office action mailed April 16, 2008. The notice set a shortened statutory period for reply of three month from its mailing date. No response was received within the allowable period and the application became abandoned on July 17, 2008. A Notice of Abandonment was mailed November 7, 2008. The instant petition was filed on January 7, 2008. Petitioner maintains that the notice of April 16, 2008, was never received and provides a copy of the relevant docketing calendar as proof of the same.

When, as in this case petitioner is arguing that an Office communication was not received, petitioner must establish non-receipt of the Office communication in accordance with section 711.03(c) of the *Manual of Patent Examining Procedure* that requires the following:

> To minimize costs and burdens to practitioners and the Office, the Office has modified the showing required to establish nonreceipt of an Office action. The showing required to establish nonreceipt of an Office communication must include a statement from the practitioner describing the system used for recording an Office action received at the correspondence address of record with the USPTO. The statement should establish that the docketing system is sufficiently reliable. It is expected that the record would include, but not be limited to, the application number, attorney docket number, the mail date of the Office action and the due date for the response.
>
> Practitioner must state that the Office action was not received at the correspondence address of record, and that a search of the practitioner's record(s), including any file jacket or the equivalent, and the application contents, indicates that the Office action was not received. A copy of the record(s) used by the practitioner where the non-received Office action would have been entered had it been received is required.

> A copy of the practitioner's record(s) required to show non-receipt of the Office action should include the master docket for the firm. That is, if a three month period for reply was set in the nonreceived Office action, a copy of the master docket report showing all replies docketed for a date three months from the mail date of the nonreceived Office action must be submitted as documentary proof of nonreceipt of the Office action. If no such master docket exists, the practitioner should so state and provide other evidence such as, but not limited to, the following: the application file jacket; incoming mail log; calendar; reminder system; or the individual docket record for the application in question.

Petitioner has met the burden of proof as established by Section 711.03(c)(II) of the MPEP. The holding of abandonment is, therefore, withdrawn.

The application file is being forwarded to Technology Center 2400, GAU 2445 for further processing that may include remailing the non-final Office action and resetting of the period for reply. It is noted that petitioner filed a response to the non-final Office action on January 7, 2009. The Technology Center may determine that re-mailing of the non-final Office action is not necessary and treat the amendment filed January 7, 2009. Question regarding the entry of the amendment should be directed to the Technology Center.

Questions concerning this decision should be directed to the undersigned at (571) 272-3222.

Kenya A. McLaughlin
Petitions Attorney
Office of Petitions

UNITED STATES PATENT AND TRADEMARK OFFICE

COMMISSIONER FOR PATENTS
UNITED STATES PATENT AND TRADEMARK OFFICE
P.O. BOX 1450
ALEXANDRIA, VA 22313-1450
www.uspto.gov

Paper No.

PERKINS COIE LLP
PATENT-SEA
P.O. BOX 1247
SEATTLE WA 98111-1247

COPY MAILED

SEP 29 2008

OFFICE OF PETITIONS

In re Patent No. 7,346,766	:	
Issue Date: March 18, 2008	:	
Mackin et al.	:	
Application No. 10/796,571	:	LETTER REGARDING
Filed: March 9, 2004	:	PATENT TERM ADJUSTMENT
Atty Docket No.343328001US2	:	

This is in response to the "LETTER REGARDING PATENT TERM ADJUSTMENT (PTA)," filed March 5, 2008. Pursuant to their duty of candor and good faith to the Office, patentees disclose that the initial determination of patent term adjustment at the time of the mailing of the notice of allowance should be three hundred ninety-one (391) days, not four hundred eighty-one (481) days.

The request for review of the patent term adjustment is **GRANTED**.

The patent term adjustment indicated in the patent is to be corrected by issuance of a certificate of correction showing a revised Patent Term Adjustment of three hundred ninety-one **(391)** days.

On March 18, 2008, the application matured into U.S. Patent No. 7,346,766, with a revised patent term adjustment of 481 days. Patentees disclose that a Request for Continued Examination (RCE) was filed on October 30, 2007, which was 90 days past the due date of August 1, 2007.

A review of the record confirms that in response to the final Office action mailed May 1, 2007, patentees did not file an RCE until October 30, 2007, three months and 90 days later. As

such, a period of reduction of 90 days, is being entered pursuant to 37 C.F.R. §1.704(b).

As such, the patent should have issued with a revised patent term adjustment of three hundred ninety-one (391) days.

As this letter was submitted as an advisement to the Office of an error in Patentees' favor, the Office will not assess the $200.00 fee under 37 CFR 1.18(e). The Office thanks Patentees for their good faith and candor in bringing this to the attention of the Office.

The application file is being forwarded to the Certificates of Correction Branch for issuance of a certificate of correction in order to rectify this error, and for consideration of the request for certificate of correction filed April 24, 2008. The Office will issue a certificate of correction indicating that the term of the above-identified patent is extended or adjusted by three hundred ninety-one **(391)** days.

Telephone inquiries specific to this matter should be directed to the undersigned at (571) 272-3219.

Nancy Johnson
Senior Petitions Attorney
Office of Petitions

Enclosure: Copy of DRAFT Certificate of Correction

UNITED STATES PATENT AND TRADEMARK OFFICE

CERTIFICATE OF CORRECTION

PATENT : 7,346,766 B2

DATED : **March 18, 2008** **DRAFT**

INVENTOR(S) : Mackin et al.

It is certified that error appears in the above-identified patent and that said Letters Patent is hereby corrected as shown below:

On the cover page,

[*] Notice: Subject to any disclaimer, the term of this patent is extended or adjusted under 35 USC 154(b) by 481 days

Delete the phrase "by 481 days" and insert – by 391 days--

UNITED STATES PATENT AND TRADEMARK OFFICE

Commissioner for Patents
United States Patent and Trademark Office
P.O. Box 1450
Alexandria, VA 22313-1450
www.uspto.gov

Bozicevic, Field & Francis LLP
1900 University Avenue
Suite 200
East Palo Alto, CA 94303

COPY MAILED

MAY 17 2007

OFFICE OF PETITIONS

In re Application of	:	
Dave Delaney et al.	:	
Application No. 10/796,576	:	DECISION ON PETITION
Filed: March 8, 2004	:	TO WITHDRAW
Attorney Docket No. CORA-006CON2	:	FROM RECORD

This is a decision on the Request to Withdraw as attorney or agent of record under 37 C.F.R. § 1.36(b), filed October 30, 2006.

The request is **APPROVED**.

A grantable request to withdraw as attorney/agent of record must be signed by every attorney/agent seeking to withdraw or contain a clear indication that one attorney is signing on behalf of another/others. A request to withdraw will not be approved unless at least 30 (thirty) days would remain between the date of approval and the later of the expiration date of a time to file a response or the expiration date of the maximum time period which can be extended under 37 C.F.R. § 1.136(a).

The request was signed by Bret E. Field on behalf of all attorneys of record.

All attorneys/agents have been withdrawn.

Applicant is reminded that there is no attorney of record at this time.

The request to change the correspondence of record is not acceptable as the requested correspondence address is not that of: (1) the first named signing inventor; or (2) an intervening assignee of the entire interest under 37 C.F.R 3.71. All future communications from the Office will be directed to the first named signing inventor at the first copied address below until otherwise properly notified by the applicant.

There is no outstanding Office action at this time.

Telephone inquiries concerning this decision should be directed to Terri Williams at 571-272-2991.

T. Williams

Terri Williams
Petitions Examiner
Office of Petitions

cc: **Dave Delaney**
191 Jefferson Avenue
Menlo Park, CA 94025

cc: **Carl J. Evens**
Johnson & Johnson
One Johnson & Johnson Plaza
New Brunswick, NJ 08933-7003

UNITED STATES PATENT AND TRADEMARK OFFICE

UNITED STATES DEPARTMENT OF COMMERCE
United States Patent and Trademark Office
Address: COMMISSIONER FOR PATENTS
P.O. Box 1450
Alexandria, Virginia 22313-1450
www.uspto.gov

APPLICATION NUMBER	FILING OR 371 (c) DATE	FIRST NAMED APPLICANT	ATTY. DOCKET NO./TITLE
10/796,576	03/08/2004	Dave Delaney	CORA-006CON2

CONFIRMATION NO. 1110

OC000000023905736

24353
BOZICEVIC, FIELD & FRANCIS LLP
1900 UNIVERSITY AVENUE
SUITE 200
EAST PALO ALTO, CA 94303

Date Mailed: 05/17/2007

NOTICE REGARDING CHANGE OF POWER OF ATTORNEY

This is in response to the Power of Attorney filed 10/30/2006.

- The withdrawal as attorney in this application has been accepted. Future correspondence will be mailed to the new address of record. 37 CFR 1.33.

Kelli S. Williams

Office of Initial Patent Examination (571) 272-4000, or 1-800-PTO-9199

FORMER ATTORNEY/AGENT COPY

UNITED STATES PATENT AND TRADEMARK OFFICE

UNITED STATES DEPARTMENT OF COMMERCE
United States Patent and Trademark Office
Address: COMMISSIONER FOR PATENTS
P.O. Box 1450
Alexandria, Virginia 22313-1450
www.uspto.gov

APPLICATION NO.	FILING DATE	FIRST NAMED INVENTOR	ATTORNEY DOCKET NO.	CONFIRMATION NO.
10/796,582	03/09/2004	Jefferson G. Shingleton	PWRL 1029-4	1118

74329 7590 06/04/2009
SunPower Corporation c/o
Haynes Beffel & Wolfeld LLP
P.O. Box 366
Half Moon Bay, CA 94019

EXAMINER
MOWLA, GOLAM

ART UNIT	PAPER NUMBER
1795	

MAIL DATE	DELIVERY MODE
06/04/2009	PAPER

Please find below and/or attached an Office communication concerning this application or proceeding.

The time period for reply, if any, is set in the attached communication.

UNITED STATES PATENT AND TRADEMARK OFFICE

Commissioner for Patents
United States Patent and Trademark Office
P.O. Box 1450
Alexandria, VA 22313-1450
www.uspto.gov

Mailed:

In re application of	:	
Jefferson G. Shingleton, et al.	:	DECISION ON
Serial No. 10/796,582	:	PETITION
Filed: August 05, 2004	:	
For: MODULAR SHADE SYSTEM WITH SOLAR	:	
TRACKING PANELS	:	

This is a response to the REQUEST TO CORRECT INVENTORSHIP UNDER RULE 37 CFR § 1.48 filed on May 21, 2009.

Petitioners request amendment of the inventorship to delete Elise R. Brewster. In support of the petition, a request, signed by a party set forth in § 1.33(b), to correct the inventorship that identifies the named inventor being deleted and acknowledges that the inventor's invention is no longer being claimed in the nonprovisional application; and the processing fee set forth in § 1.17(i) have been filed.

A review of the record reveals that petitioner has complied with all the conditions in 37 CFR § 1.48(b). The petition is granted. A correct filing receipt naming the actual inventors of the above-identified patent, namely, Jefferson G. Shingleton, Thomas L. Dinwoodie, and Gianluigi Mascolo, is attached.

The Petition is **GRANTED**.

Alexa Neckel
Supervisory Patent Examiner
Art Unit 1795

APPL NO.	FILING OR 371(c) DATE	ART UNIT	FIL FEE REC'D	ATTY.DOCKET NO	TOT CLMS	IND CLMS
10/796,582	03/09/2004	1795	894	PWRL 1029-4	36	2

CONFIRMATION NO. 1118

CORRECTED FILING RECEIPT

OC000000036296919

74329
SunPower Corporation c/o
Haynes Beffel & Wolfeld LLP
P.O. Box 366
Half Moon Bay, CA 94019

Applicant(s)

Jefferson G. Shingleton, Auburn, NY;
Thomas L. Dinwoodie, Piedmont, CA;
Gianluigi Mascolo, Danville, CA;

Assignment For Published Patent Application

PowerLight Corporation, Berkeley, CA

Power of Attorney:

James Hann--29719
Mark Haynes--30846
Warren Wolfeld--31454
Bill Kennedy--33407
Ernest Beffel Jr--43489
Kenta Suzue--45145

Domestic Priority data as claimed by applicant

This appln claims benefit of 60/453,637 03/10/2003
and claims benefit of 60/517,574 11/05/2003

Foreign Applications

If Required, Foreign Filing License Granted: 05/25/2004

The country code and number of your priority application, to be used for filing abroad under the Paris Convention, is
US10/796,582

Projected Publication Date: Not Applicable

Non-Publication Request: No

Early Publication Request: No

Title

MODULAR SHADE SYSTEM WITH SOLAR TRACKING PANELS

Preliminary Class

136

UNITED STATES PATENT AND TRADEMARK OFFICE

Commissioner for Patents
United States Patent and Trademark Office
P.O. Box 1450
Alexandria, VA 22313-1450
www.uspto.gov

Law Offices of Richard E. Backus
The Monadnock Building
685 Market Street, Suite 490
San Francisco CA 94105

COPY MAILED

DEC 16 2004

OFFICE OF PETITIONS

In re Application of	:	
Namazian et al.	:	DECISION GRANTING
Application No. 10/796,592	:	PETITION
Filed: March 5, 2004	:	
Attorney Docket No. A68800	:	

This is a decision on the petition under 37 CFR 1.10(d), filed July 26, 2004, requesting that the above-identified application be accorded a filing date of March 5, 2004, rather than the presently accorded filing date of March 7, 2004.

Petitioner requests the earlier filing date on the basis that the application was purportedly deposited in Express Mail service on March 5, 2004. Petitioner acknowledges that the date of deposit in Express Mail shown on the Express Mail receipt No. ER561922466US is March 7, 2004, but argues that the application was actually deposited with the United States Postal Service (USPS) on March 5, 2004.

Paragraph (a) of 37 CFR 1.10 states that:

> Any correspondence received by the Patent and Trademark Office (Office) that was delivered by the "Express Mail Post Office to Addressee" service of the United States Postal Service (USPS) will be considered filed in the Office on the date of deposit with the USPS. <u>The date of deposit with the USPS is shown by the "date-in" on the "Express Mail" mailing label or other official USPS notation</u>. If the USPS deposit date cannot be determined, the correspondence will be accorded the Office receipt date as the filing date. See §1.6(a).

37 CFR 1.10(a)(Emphasis added).

Paragraph (d) of 37 CFR 1.10 states that:

> Any person filing correspondence under this section that was received by the Office and delivered by the "Express Mail Post Office to Addressee" service of the USPS, who can show that the "date-in" on the "Express Mail" mailing label or other official notation entered by the USPS was incorrectly entered or omitted by the USPS, may petition the Commissioner to accord the correspondence a filing date as of the date the correspondence is shown to have been deposited with the USPS, provided that:
>
> (1) The petition is filed promptly after the person becomes aware that the Office has accorded, or will accord, a filing date based upon an incorrect entry by the USPS;
>
> (2) The number of the "Express Mail" mailing label was placed on the paper(s) or fee(s) that constitute the correspondence prior to the original mailing by "Express Mail"; and
>
> (3) The petition includes a showing which establishes, to the satisfaction of the Commissioner, that the requested filing date was the date the correspondence was deposited in "Express Mail Post Office to Addressee" service prior to the last scheduled pickup for that day. Any showing pursuant to this paragraph <u>must be corroborated by evidence from the USPS or that came into being after deposit and within one business day of the deposit of the correspondence in the "Express Mail Post Office to Addressee" service of the USPS</u>.

37 CFR 1.10(d)(Emphasis added).

A grantable petition under 37 CFR 1.10(d) must include "a showing which establishes, to the satisfaction of the Commissioner, that the requested filing date was the date the correspondence was deposited in 'Express Mail Post Office to Addressee' service prior to the last scheduled pickup for that day." In addition, the showing "must be corroborated by evidence from the USPS or that came into being after deposit and within one business day of the deposit of the correspondence in the 'Express Mail Post Office to Addressee' service of the USPS."

In present petition, Richard E. Backus, attorney for petitioner, stated that he deposited the above-identified application in an Express Mail deposit box on March 5, 2004, in San Francisco, California at 3:00 PM prior to last scheduled pickup for that day (4:00 PM). Mr. Backus further stated that after making the deposit he returned to the office and wrote a letter to his client reporting that the application had been filed that day

and that the filing date would be the date of deposit in Express Mail (March 5, 2004). A copy of the letter dated March 5, 2004, accompanies the present petition.

In view of the above, petitioner has satisfied the requirements of 37 CFR 1.10(d). Accordingly, the petition is **granted**.

The Office of Initial Patent Examination is directed to correct the filing date to March 5, 2004, and to mail a corrected filing receipt.

Telephone inquiries specific to this matter should be directed to undersigned at (571) 272-3211.

Christina Tartera Donnell

Christina Tartera Donnell
Senior Petitions Attorney
Office of Petitions

UNITED STATES PATENT AND TRADEMARK OFFICE

Commissioner for Patents
United States Patent and Trademark Office
P.O. Box 1450
Alexandria, VA 22313-1450
www.uspto.gov

CHRISTIE, PARKER & HALE, LLP
PO BOX 7068
PASADENA CA 91109-7068

COPY MAILED

MAR 19 2008

In re Application of	:	
Jin-Boo Son et al.	:	
Application No. 10/796,597	:	DECISION GRANTING PETITION
Filed: March 9, 2004	:	UNDER 37 CFR 1.313(c)(2)
Attorney Docket No. 50755/P849	:	

This is a decision on the petition under 37 CFR 1.313(c)(2), filed March 18, 2008, to withdraw the above-identified application from issue after payment of the issue fee.

The petition is **GRANTED**.

The above-identified application is withdrawn from issue for consideration of a submission under 37 CFR 1.114 (request for continued examination). *See* 37 CFR 1.313(c)(2).

Petitioner is advised that the issue fee paid on February 19, 2008 cannot be refunded. If, however, this application is again allowed, petitioner may request that it be applied towards the issue fee required by the new Notice of Allowance.[1]

Telephone inquiries should be directed to Terri Williams at (571) 272-2991.

This application is being referred to Technology Center AU 2629 for processing of the request for continued examination under 37 CFR 1.114 and for consideration of the concurrently filed Information Disclosure Statement.

Karen Creasy

Karen Creasy
Petitions Examiner
Office of Petitions

---

[1] *The request to apply the issue fee to the new Notice may be satisfied by completing and returning the new Part B – Fee(s) Transmittal Form (along with any balance due at the time of submission). Petitioner is advised that the Issue Fee Transmittal Form* ***must*** *be completed and timely submitted to avoid abandonment of the application.*

UNITED STATES PATENT AND TRADEMARK OFFICE

Commissioner for Patents
United States Patent and Trademark Office
P.O. Box 1450
Alexandria, VA 22313-1450
www.uspto.gov

CHRISTIE, PARKER & HALE, LLP
PO BOX 7068
PASADENA CA 91109-7068

COPY MAILED

JUL 29 2008

In re Application of	:	
Jin-Boo Son, et al.	:	
Application No. 10/796,597	:	DECISION GRANTING PETITION
Filed: March 9, 2004	:	UNDER 37 CFR 1.313(c)(2)
Attorney Docket No. 50755/P849	:	

This is a decision on the petition under 37 CFR 1.313(c)(2), filed July 28, 2008 to withdraw the above-identified application from issue after payment of the issue fee.

The petition is **GRANTED**.

The above-identified application is withdrawn from issue for consideration of a submission under 37 CFR 1.114 (request for continued examination). *See* 37 CFR 1.313(c)(2).

Petitioner is advised that the issue fee paid on June 24, 2008 cannot be refunded. If, however, this application is again allowed, petitioner may request that it be applied towards the issue fee required by the new Notice of Allowance.[1]

Telephone inquiries should be directed to Terri Williams at (571) 272-2991.

This application is being referred to Technology Center AU 2629 for processing of the request for continued examination under 37 CFR 1.114 and for consideration of the concurrently filed information disclosure statement.

Terri Williams
Petitions Examiner
Office of Petitions

---

[1] *The request to apply the issue fee to the new Notice may be satisfied by completing and returning the new Part B – Fee(s) Transmittal Form (along with any balance due at the time of submission). Petitioner is advised that the Issue Fee Transmittal Form must be completed and timely submitted to avoid abandonment of the application.*

UNITED STATES PATENT AND TRADEMARK OFFICE

Commissioner for Patents
United States Patent and Trademark Office
P.O. Box 1450
Alexandria, VA 22313-1450
www.uspto.gov

Daniel P. Burke, Esq.
GALGANO & BURKE, LLP
300 Rabro Drive
Hauppauge, NY 11754

COPY MAILED

NOV 10 2005

OFFICE OF PETITIONS

In re Application of
Ferraro et al.
Application No. 10/796,601
Filed: March 9, 2004
Attorney Docket No. 129-3-CON

Decision on Petition

This is a decision on the petition under 37 CFR 1.78(a)(3), filed July 11, 2005, to accept the unintentionally delayed priority claim set forth in the concurrently filed amendment.

The petition is **granted**.

When an application is filed on or after November 29, 2000, benefit claims under 35 U.S.C. 119(e), 120, 121 and 365(c) must be made during the pendency of the application and within the later of four months from the actual filing date of the application or sixteen months from the filing date of the prior application. For the instant application, the above period of time ended on July 9, 2004. The priority claim at issue was not made by this date. However, petitioner has submitted a petition under 37 CFR 1.78(a)(3) which allows one to make late priority claims if certain criteria are satisfied.

Per 37 CFR 1.78(a)(3), a petition to accept an unintentionally delayed claim under 35 U.S.C. 120, 121, or 365(c) for the benefit of a prior-filed application must be accompanied by:

(1) The reference required by 37 CFR 1.78(a)(2), unless previously submitted;
(2) The surcharge set forth in § 1.17(t); and
(3) A statement that the entire delay between the date the claim was due under paragraph (a)(2)(ii) of this section and the date the claim was filed was unintentional. The Commissioner may require additional information where there is a question whether the delay was unintentional.

Petitioner has satisfied the requirements listed above.

The granting of this petition is not a determination that petitioner is actually entitled to the benefit of the filing date of the prior-filed application, but is only a determination that the Office will allow petitioner to file an untimely claim for priority. The examiner will, in due course, consider the priority claim and determine the extent to which the application is entitled to an earlier filing date.

A corrected Filing Receipt, which includes the priority claim, accompanies this decision on petition.

Telephone inquiries concerning this decision should be directed to Petitions Attorney Steven Brantley at (571) 272-3203.

Frances Hicks
Petitions Examiner
Office of Petitions

Attached: Corrected Filing Receipt

UNITED STATES PATENT AND TRADEMARK OFFICE

Commissioner for Patents
United States Patent and Trademark Office
P.O. Box 1450
Alexandria, VA 22313-1450
www.uspto.gov

COPY MAILED

AUG 26 2009

OFFICE OF PETITIONS

SWISS TANNER, P.C.
P.O. BOX 1749
FOUR MAIN STREET, SUITE 100
LOS ALTOS, CA 94022

In re Application of

Richard S. Bein et al
Application No. 10/796,604
Filed: March 8, 2004
Attorney Docket No. 355492-2971

DECISION ON PETITION
TO WITHDRAW
FROM RECORD

This is a decision on the Request to Withdraw as attorney or agent under 37 C.F.R. § 1.36(b) or 37 C.F.R. § 10.40 filed July 14, 2009.

The request is **APPROVED**.

A review of the file record indicates that Antoinette F. Konski: (1) does not have power of attorney in this patent application; and (2) has been employed or otherwise engaged in the proceedings in this patent application. In view of the present decision, Antoinette F. Konski has been withdrawn from the present application and may not prepare or submit papers under 37 C.F.R. § 1.34, or correspond in any manner in this application unless appointed in an acceptable power of attorney under 37 C.F.R. § 1.32(b).

There is an outstanding Office action mailed July 20, 2009 that requires a reply from the applicant.

Telephone inquires concerning this decision should be directed to Irvin Dingle at 571-272-3210.

Irvin Dingle
Petitions Examiner
Office of Petitions

cc: Antoinette F. Konski
975 Page Mill Road
Palo Alto, CA 94304-1013

APPROVED: /N.H./

IN THE UNITED STATES PATENT & TRADEMARK OFFICE

ATTORNEY DOCKET NUMBER: 200312243-1

IN RE APPLICATION OF: U.S. Patent No. 7,184,388

USPTO CONFIRMATION CODE: 1769

APPLICATION NO.: 10/796,606

FILED: Mar. 09, 2004

EXAMINER: Nabil Hindi

GROUP ART UNIT: 2627

FOR: HEATING ELEMENTS FOR A STORAGE DEVICE

37 CFR 1.322 & 37 CFR 1.323 REQUEST FOR CERTIFICATE OF CORRECTION

HONORABLE COMMISSIONER OF PATENTS & TRADEMARKS

Sir:

The following is a request for a certificate of correction in Serial Number 10/796,606, now Patent Number 7,184,388.

A certificate of correction under 35 USC 254 is respectfully requested in the above-identified patent.

☐ All errors were the fault of the USPTO, no fee required. In the event that a further fee is required, please charge the amount to Deposit Account No. 082025.

☐ All errors were the fault of the applicant and, accordingly, please charge **$100.00** to our Deposit Account No. 082025. In the event that a further fee is required, please charge the amount to the same Deposit Account.

☒ The errors were the fault of both the applicant and USPTO and, accordingly, please charge **$100.00** to our Deposit Account No. 082025. In the event that a further fee is required, please charge the amount to the same Deposit Account.

The exact locations where the errors appear in the patent and patent application are as follows:

In column 8, line 9, in Claim 15, delete "then" and insert - - than - -, therefor.
(Claims filed on Mar. 09, 2004, page 13, in Claim 15, line 4)

In column 10, line 1, in Claim 33, delete "claim 29" and insert - - claim 30 - -, therefor.
(Examiner's Amendment to claims dated Dec. 06, 2006, page 2, line 16)

In column 10, line 3, in Claim 34, delete "claim 29" and insert - - claim 30 - -, therefor.
(Examiner's Amendment to claims dated Dec. 06, 2006, page 2, line 17)

The requested corrections are attached on Form PTO 1050.

Respectfully Submitted

12/16/2008
DATE

Manisha Chakrabarti
Name: Manisha Chakrabarti
Registration No.: 41,665

Attorney/Agent of Record

HEWLETT-PACKARD COMPANY
Intellectual Property Administration
P.O. Box 272400
Fort Collins, Colorado 80527-2400

PTO/SB/44 (04-05)
Approved for use through 04/30/2007. OMB 0651-0033
U.S. Patent and Trademark Office; U.S. DEPARTMENT OF COMMERCE
Under the Paperwork Reduction Act of 1995, no persons are required to respond to a collection of information unless it displays a valid OMB control number.
(Also Form PTO-1050)

UNITED STATES PATENT AND TRADEMARK OFFICE
CERTIFICATE OF CORRECTION

PATENT NO : 7,184,388

APPLICATION NO. : 10/796,606

ISSUE DATE : Feb. 27, 2007

INVENTOR(S) : Corbin L. Champion, et al.

It is certified that an error appears or errors appear in the above-identified patent and that said Letters Patent is hereby corrected as shown below:

In column 8, line 9, in Claim 15, delete "then" and insert - - than - -, therefor.

In column 10, line 1, in Claim 33, delete "claim 29" and insert - - claim 30 - -, therefor.

In column 10, line 3, in Claim 34, delete "claim 29" and insert - - claim 30 - -, therefor.

MAILING ADDRESS OF SENDER (Please do not use customer number below):

HEWLETT-PACKARD COMPANY
Intellectual Property Administration
P. O. Box 272400
Fort Collins, Colorado 80527-2400

This collection of information is required by 37 CFR 1.322, and 1.323, and 1.324. The information is required to obtain or retain a benefit by the public which is to file (and by the USPTO to process) an application. Confidentiality is governed by 35 U.S.C 122 and 37 CFR 1.14. This collection is estimated to take 1.0 hour to complete, including gathering, preparing, and submitting the completed application form to the USPTO. Time will vary depending upon the individual case. Any comments on the amount of time you require to complete this form and/or suggestions for reducing this burden, should be sent to the Chief Information Officer, U.S. Patent and Trademark Office, U.S. Department of Commerce, P.O. Box 1450, Alexandria, VA 22313-1450. DO NOT SEND FEES OR COMPLETED FORMS TO THIS ADDRESS. SEND TO: Attention Certificate of Corrections Branch, Commissioner for Patent, P.O. Box 1450, Alexandria, VA 22313-1450.

If you need assistance in completing the form, call 1-800-PTO-9199 and select option 2.

UNITED STATES PATENT AND TRADEMARK OFFICE

UNITED STATES DEPARTMENT OF COMMERCE
United States Patent and Trademark Office
Address: COMMISSIONER FOR PATENTS
P.O. Box 1450
Alexandria, Virginia 22313-1450
www.uspto.gov

KNOBBE MARTENS OLSON & BEAR LLP
2040 MAIN STREET
FOURTEENTH FLOOR
IRVINE, CA 92614

Mail Date: 04/20/2010

Applicant	: Eiji Kato	: DECISION ON REQUEST FOR
Patent Number	: 7650959	: RECALCULATION of PATENT
Issue Date	: 01/26/2010	: TERM ADJUSTMENT IN VIEW
Appliction No	: 10/796,609	: OF WYETH AND NOTICE OF INTENT TO
Filed	: 03/09/2004	: ISSUE CERTIFICATE OF CORRECTION
		:

The Request for Recalculation is **GRANTED** to the extent indicated.

The patent term adjustment has been determined to be **386** days. The USPTO will *sua sponte* issue a certificate of correction reflecting the amount of PTA days determined by the recalculation.

Prior to the issuance of the certificate of correction, the USPTO will afford patentee an opportunity to be heard and request reconsideration. Accordingly, patentee has **one month or thirty (30) days**, whichever is longer, to file a request for reconsideration of this patent term adjustment calculation. See 35 U.S.C. 154(b)(3)(B)(ii) and 37 CFR 1.322(a)(4). No extensions of time will be granted under 37 CFR 1.136.

Patentee should use document code PET.OP if electronically filing a request for reconsideration of this patent term adjustment calculation. The patentee must also include the information required by 37 CFR 1.705(b)(2) and the fee required by 37 CFR 1.18(e). If patentee does not file a timely request for reconsideration of this patent term adjustment calculation including the information required by 37 CFR 1.705(b)(2) and the fee required by 37 CFR 1.18(e), the USPTO will issue a certificate of correction reflecting the PTA determination noted above.

Patentee should be aware that in order to preserve the right to review in the United States District Court for the District of Columbia of the USPTO patent term adjustment determination, patentee must ensure that he or she also take the steps required under 35 U.S.C. 154(b)(4)(A) in a timely manner. Nothing in the request for recalculation should be construed as providing an alternative time frame for commencing a civil action under 35 U.S.C. 154(b)(4)(A).

Any questions concerning this decision should be directed to the Office of Patent Legal Administration at 571-272-7702.

UNITED STATES PATENT AND TRADEMARK OFFICE

4-6-07

Commissioner for Patents
United States Patent and Trademark Office
P.O. Box 1450
Alexandria, VA 22313-1450
www.uspto.gov

Patent No. : 6,966,546 B2
Ser. No. : 10/796,621
Inventor(s) : Klaus-Jurgen Winter, et. al.
Issued : November 22, 2005
Title : LOWER BLOCK FOR A CABLE ACTUATOR

Re: Request for Certificate of Correction

Consideration has been given your request for the issuance of a certificate of correction for the above-identified patent under the provisions of Rule(s) 1.322.

Assignees' names and addresses (assignment data) printed in a patent, are based *solely* on information supplied in the appropriate space for identifying the assignment data, i.e., item 3 of the Issue Fee Transmittal Form PTOL-85B. Granting of a request under 37 CFR 3.81(b) is required to correct applicant's error providing ***incorrect or erroneous*** assignment data, *before* issuance of a Certificate of Correction, under 37 CFR 1.323 *(see Manual of Patent Examining Procedures (M.P.E.P) Chp.1400, sect. 1481).* This procedure is required *at any time after the issue fee is paid*, including after issuance of the patent.

In view of the foregoing, your request is hereby denied.

A request to correct the Assignee under 37 CFR 3.81(b) should include:

A. **the processing fee set forth in 37 CFR 1.117(h) (currently $130);**
B. a statement that the failure to include the correct assignee name on the PTOL-85B was inadvertent; and
C. a copy of the Notice of Recordation of Assignment Document, reflecting the reel and frame number where the assignment(s) is recorded and/or reflecting proof of *the date* the assignment was submitted for recordation.

In the Request, Applicant(s) may request that the file be forwarded to Certificates of Correction Branch, for issuance of a Certificate of Correction, if the Request is granted.

Any request under 37 CFR 3.81(b) should be directed to the following address or facsimile number:

By mail: Mail Stop PETITIONS
Commissioner for Patents
Post Office Box 1450
Alexandria, VA 22313-1450

By hand: Customer Service Window
Mail Stop Petitions
Randolph Building
401 Dulany Street
Alexandria, VA 22314

By fax: (703) 872-9306
ATTN: Office of Petitions

If a fee (currently $100) was previously submitted for consideration of a Request for Certificate of Correction, under CFR 1.323, to correct assignment data, , no additional fee is required.

Eva James
For Cecelia Newman
Decisions & Certificates
of Correction Branch
(703) **308-9390 ext. 124** or 102

Frederick S. Burkhart
Van Dyke, Gardner, Linn & Burkhart, LLP
2851 Charlevoix Dr., S.E.
Grand Rapids, MI 49588-8695

ej

SPE RESPONSE FOR CERTIFICATE OF CORRECTION

Paper No.: _____

DATE : 4-19-07

TO SPE OF : ART UNIT 4700

SUBJECT : Request for Certificate of Correction on Patent No.: 6966546 B2 (10/796621

A response is requested with respect to the accompanying request for a certificate of correction.

Please complete this form and return with file, within **7** days to:
Palm location **7580, Certificates of Correction Branch – South Tower – 9A22**
If response is for an IFW, **return to employee (named below) via PUBSCofC Team in MADRAS.**
With respect to the change(s) requested, correcting Office and/or Applicant's errors, should the patent read as shown in the certificate of correction (COCIN)? No new matter should be introduced, nor should the scope or meaning of the claims be changed.

Eva James

Please reply A/S/A/P for assignee to be granted.

Thank You For Your Assistance

Atty called today 4-19-07

Certificates of Correction Branch
Tel. No. 703-305-8309

The request for issuing the above-identified correction(s) is hereby:
Note your decision on the appropriate box.

- ☐ **Approved** — **All** changes apply.
- ☐ **Approved in Part** — Specify below which changes **do not** apply.
- ☐ **Denied** — State the reasons for denial below.

Comments:

_____

_____

_____

_____

_____

SPE _____ Art Unit _____

UNITED STATES PATENT AND TRADEMARK OFFICE

Commissioner for Patents
United States Patent and Trademark Office
P.O. Box 1450
Alexandria, VA 22313-1450
www.uspto.gov

HEWLETT-PACKARD COMPANY
INTELLECTUAL PROPERTY ADMINISTRATION
PO BOX 272400
FOR COLLINS CO 80527-2400

COPY MAILED

JUN 27 2005

OFFICE OF PETITIONS

In re Application of Paul James Broyles Application No. 10/796,627 Filed: March 9, 2004 Attorney Docket No. 200301870-2	: : : : :	DECISION ON PETITION

This is a decision on the "PETITION UNDER 37 C.F.R. § 1.181 IN RESPONSE TO NOTICE OF OMITTED ITEMS IN A NONPROVISIONAL APPLICATION", filed February 24, 2005, which is being treated as a petition under 37 C.F.R. 1.53 to accord the above-identified application a filing date of March 9, 2004, with page 7 of the specification as part of the original disclosure.

The petition is **GRANTED**.

Application papers in the above-identified application were filed on March 9, 2004. However, on January 24, 2005, the Initial Patent Examination Division mailed applicant a "Notice of Omitted Item(s) in a NonProvisional Application." Applicant was notified that the application papers had been accorded a filing date of March 9, 2004; however, page 7 of the specification appeared to have been omitted.

In response, applicant filed the instant petition. Accompanying the petition was a copy of page 7 of the specification. Applicant maintains that the application as originally filed included page 7. In support thereof, applicant submitted a postcard receipt identifying this application, itemizing "Specification: 21 Pages" as enclosed, bearing a United States

Patent and Trademark Office date-stamp of March 9, 2004, and lacking any notation of non- receipt of any item listed. A postcard receipt which itemizes and properly identifies the items which are being filed serves as *prima facie* evidence of receipt in the Office of all items listed thereon on the date stamped thereon by the Office. See MPEP 503.

Given the basis for granting the petition, no petition fee has been required, and none has been charged.

The application is being forwarded to the Office of Initial Patent Examination (OIPE) for further processing with a filing date of March 9, 2004, using the application papers received in the Office on that date and page 7 of the specification as resupplied on petition filed February 24, 2005.

Telephone inquiries related to this decision should be directed to the undersigned at 571-272-3207.

Cliff Congo
Petitions Attorney
Office of Petitions

UNITED STATES PATENT AND TRADEMARK OFFICE

UNITED STATES DEPARTMENT OF COMMERCE
United States Patent and Trademark Office
Address: COMMISSIONER FOR PATENTS
P.O. Box 1450
Alexandria, Virginia 22313-1450
www.uspto.gov

H. Michael Brucker
Suite 110
5855 Doyle Street
Emeryville, CA 94608

Mail Date: 04/21/2010

Applicant	: Percival C. Banks	: DECISION ON REQUEST FOR
Patent Number	: 7595032	: RECALCULATION of PATENT
Issue Date	: 09/29/2009	: TERM ADJUSTMENT IN VIEW
Appliction No	: 10/796,643	: OF WYETH AND NOTICE OF INTENT TO
Filed	: 03/08/2004	: ISSUE CERTIFICATE OF CORRECTION
		:

The Request for Recalculation is **GRANTED** to the extent indicated.

The patent term adjustment has been determined to be **918** days. The USPTO will *sua sponte* issue a certificate of correction reflecting the amount of PTA days determined by the recalculation.

Prior to the issuance of the certificate of correction, the USPTO will afford patentee an opportunity to be heard and request reconsideration. Accordingly, patentee has **one month or thirty (30) days**, whichever is longer, to file a request for reconsideration of this patent term adjustment calculation. See 35 U.S.C. 154(b)(3)(B)(ii) and 37 CFR 1.322(a)(4). No extensions of time will be granted under 37 CFR 1.136.

Patentee should use document code PET.OP if electronically filing a request for reconsideration of this patent term adjustment calculation. The patentee must also include the information required by 37 CFR 1.705(b)(2) and the fee required by 37 CFR 1.18(e). If patentee does not file a timely request for reconsideration of this patent term adjustment calculation including the information required by 37 CFR 1.705(b)(2) and the fee required by 37 CFR 1.18(e), the USPTO will issue a certificate of correction reflecting the PTA determination noted above.

Patentee should be aware that in order to preserve the right to review in the United States District Court for the District of Columbia of the USPTO patent term adjustment determination, patentee must ensure that he or she also take the steps required under 35 U.S.C. 154(b)(4)(A) in a timely manner. Nothing in the request for recalculation should be construed as providing an alternative time frame for commencing a civil action under 35 U.S.C. 154(b)(4)(A).

Any questions concerning this decision should be directed to the Office of Patent Legal Administration at 571-272-7702.

UNITED STATES PATENT AND TRADEMARK OFFICE

COMMISSIONER FOR PATENTS
UNITED STATES PATENT AND TRADEMARK OFFICE
P.O. BOX 1450
ALEXANDRIA, VA 22313-1450
www.uspto.gov

Robert R. Lech, Esq.
Calfee, Halter & Griswold LLP
Suite 1100
21 East State Street
Columbus, OH 43215-4243

MAIL

NOV 2 6 2004

DIRECTOR OFFICE
TECHNOLOGY CENTER 2100

In re Application of: Ernst, et al.
Application No. 10/796,648
Filed: March 9, 2004
For: SYSTEM AND METHOD FOR DETERMINING COMPONENTS OF A BLENDED PLASTIC MATERIAL

DECISION ON PETITION TO MAKE SPECIAL UNDER M.P.E.P.§708.02(V): ENVIRONMENTAL QUALITY

This is a decision on the petition, filed March 9, 2004, under 37 C.F.R. § 1.102(c) and M.P.E.P. §708.02(V): Environmental Quality, to make the above-identified application special.

The petition is **DISMISSED**.

A grantable petition to make an application special under 37 C.F.R. § 1.102 and in accordance with M.P.E.P. § 708.02, Section V, for an invention which materially enhances the quality of the environment of mankind by contributing to the restoration or maintenance of the basic life-sustaining elements, i.e. air, water and soil, must be accompanied by affidavits or declarations under 37 C.F.R. § 1.102 by the applicant or his/her attorney or agent explaining how the invention contributes to the maintenance or restoration of one of these life sustaining elements. No fee is required for such a petition.

The instant petition is accompanied by a declaration by applicant explaining that the present invention "*can* increase the use of post-consumer recycled plastics ("PCR") and reduce the volume of plastics in the waste stream (landfill)". As such, Applicant submits that the present invention "will materially enhance the quality of the environment of mankind by contributing to the restoration or maintenance of the basic life-sustaining natural elements". It is noted that the claimed invention appears to be drawn to a method, apparatus and process instructions for determining plastic components of a blended plastic material.

It is pure conjecture to assume that the instant invention will materially enhance the quality of the environment. Petitioner's invention *may* result in an increase in the use of post-consumer recycled plastics and further, may result in the reduction of the volume of plastics in the waste stream (apparently through increased recycling rates), however there is no factual evidence that the invention "**will** materially enhances the quality of the environment of mankind by

contributing to the restoration or maintenance of the basic-life sustaining natural elements" (i.e. air, water, and soil). (M.P.E.P. § 708.02, V). The contribution of petitioner's invention, does not appear to rise to the level intended by the Rule.

As a result, no advancement in the technology of Environmental Quality has been persuasively shown.

Accordingly, the petition is **DISMISSED**. The application will be returned to the examiner's docket to await examination in its proper turn based on its effective filing date.

Any request for reconsideration must be filed within TWO MONTHS of the mailing date of this decision.

It is suggested that Applicant review M.P.E.P. §708.02 regarding other grounds available for filing a petition to make special. In particular, note M.P.E.P. §708.02(VIII): Accelerated Examination, which does not place limitations on the subject matter of the application.

10/28/04

Brian L. Johnson
Special Programs Examiner
Technology Center 2100
Computer Architecture, Software, and Information Security
(571) 272-3595

UNITED STATES PATENT AND TRADEMARK OFFICE

Commissioner for Patents
United States Patent and Trademark Office
P.O. Box 1450
Alexandria, VA 22313-1450
www.uspto.gov

DAVID W. HIGHET, VP AND CHIEF IP COUNSEL
BECTON, DICKINSON AND COMPANY
1 BECTON DRIVE, MC 110
FRANKLIN LAKES NJ 07417-1880

COPY MAILED

AUG 0 4 2005

OFFICE OF PETITIONS

In re Application of
Nadeau, et al.
Application No. 10/796,661
Filed: March 8, 2004
Attorney Docket No. P-4756D4

: DECISION ON PETITION
: UNDER 37 CFR 1.78(a)(3)

This is a decision on the petition under 37 CFR 1.78(a)(3), filed November 15, 2004, to accept an unintentionally delayed claim under 35 U.S.C. §120 for the benefit of the prior-filed nonprovisional application set forth in the concurrently filed informal amendment.

The petition is **DISMISSED**.

A petition for acceptance of a claim for late priority under 37 CFR 1.78(a)(3) is only applicable to those applications filed on or after November 29, 2000. Further, the petition is appropriate only after the expiration of the period specified in 37 CFR 1.78(a)(2)(ii). In addition, the petition under 37 CFR 1.78(a)(3) must be accompanied by:

(1) the reference required by 35 U.S.C. § 120 and 37 CFR 1.78(a)(2)(i) of the prior-filed application, unless previously submitted;
(2) the surcharge set forth in § 1.17(t); and
(3) a statement that the entire delay between the date the claim was due under 37 CFR 1.78(a)(2)(ii) and the date the claim was filed was unintentional. The Commissioner may require additional information where there is a question whether the delay was unintentional.

The instant petition does not comply with item (1).

Petitioner is informed that Office records shows that application no. 09/894,796 became abandoned on December 3, 2003 for failure to respond to an Office action mailed on September 2, 2003. The present application, no. 10/796,661, was filed on March 8, 2004. There appears to be no copendency between application nos. 09/894,796 and 10/796,661.

Therefore, it would be improper to grant a petition adding a benefit claim that depends on application no. 09/894,796, even if petitioner had filed a formal amendment to the specification (petitioner has not). Application no. 09/894,796 is a necessary intermediate application between the instant application and application no. 09/590,061.

Petitioner must first file a petition to revive under 37 CFR 1.137(b) in application no. 09/894,796 in order to establish copendency between application no. 09/894,796 and the instant application.

Then petitioner must file a reconsideration petition under 37 CFR 1.78(a)(3) in the instant application with a formal amendment to the first line of the specification referencing both application no. 09/894,796, filed June 28, 2001 and application no. 09/590,061, filed June 8, 2000, indicating the relationship between each nonprovisional application in order to establish copendency throughout the entire chain of applications. In addition, it is noted that application no. 09/590, 061 matured into patent no. 6,316,200, not patent no. 6,379,888 as is stated in the petition.

37 CFR 1.78(a)(2)(i) requires that any nonprovisional application claiming the benefit of one or more prior-filed copending nonprovisional applications must contain or be amended to contain a reference to each such prior-filed application, identifying it by application number (consisting of the series code and serial number) and indicating the relationship of the applications. The relationship between the applications is whether the subject application is a continuation, divisional, or continuation-in-part of a prior-filed nonprovisional application. Also, the status of each nonprovisional parent application (if it is patented or abandoned) should also be indicated, following the filing date of the parent nonprovisional application. See MPEP Section 201.11, Rev. 2, May 2004, Reference to Prior Application.

Before any reconsideration petition under 37 CFR § 1.78(a)(3) can be granted, copendency between application no. 09/894,796 and application no. 10/796,661 must be established and then a renewed petition under 37 CFR § 1.78(a)(3) in application no. 10/796,661 and a substitute formal amendment (complying with 37 CFR 1.121) stating the relationship between each nonprovisional application in the chain is required.

Pursuant to petitioner's authorization, deposit account no. 02-1666 will be charged the required surcharge of $1,370.00, which was the amount due on November 15, 2004.

Further correspondence with respect to this matter should be addressed as follows:

By mail:

Mail Stop PETITION
Commissioner for Patents
Post Office Box 1450
Alexandria, VA 22313-1450

By hand: U.S. Patent and Trademark Office
Customer Service Window, Mail Stop Petition
Randolph Building
401 Dulany Street
Alexandria, VA 22314

By FAX after 7/15/05: (571) 273-8300 - ATTN: Office of Petitions

Any questions concerning this matter may be directed to Petitions Attorney E. Shirene Willis at (571) 272-3230.

Frances Hicks

Frances Hicks
Lead Petitions Examiner
Office of Petitions
Office of the Deputy Commissioner
for Patent Examination Policy

UNITED STATES PATENT AND TRADEMARK OFFICE

Commissioner for Patents
United States Patent and Trademark Office
P.O. Box 1450
Alexandria, VA 22313-1450
www.uspto.gov

TOWNSEND AND TOWNSEND AND CREW, LLP
TWO EMBARCADERO CENTER
EIGHTH FLOOR
SAN FRANCISCO CA 94111-3834

COPY MAILED

SEP 2 6 2005

OFFICE OF PETITIONS

In re Patent No. 6,852,633 :
Issued: February 8, 2005 :
Application No. 10/796,700 : DECISION ON PETITION
Filed: March 8, 2004 : UNDER 37 CFR 1.55(a)
Attorney Docket No. 021653-001100US :

This is a decision on the petition under 37 CFR 1.55(a), filed January 13, 2005, for entry of priority papers submitted after the date the issue fee was paid.

The petition is **DISMISSED**.

Receipt is acknowledged of papers submitted under 35 USC § 119 for Chinese Patent Application No. 02160568.8. Petitioner is advised that the rule affecting the submission of a claim for priority of a certified priority document under 37 CFR 1.55(a) was changed effective November 7, 2000. In effect, the Office will permit applicants to file a priority claim or certified priority document with the processing fee set forth in 37 CFR 1.17(i) between the date the issue fee is paid and the date a patent is issued.[1]

However, in this instance, the priority papers cannot be accepted.

It is noted that while the claim for foreign priority under 35 U.S.C. § 119(a)-(d) was acknowledged, that the certified copies of the priority documents were not of record and thus the reason for the instant petition, to perfect the claim. However, because the U.S. application was filed March 8, 2004, more than one year from the filing of the foreign application, December 30, 2002, to which priority is claimed, petitioner is not entitled to such priority and the acknowledgment was erroneous. See MPEP 201.14(c).

Due to Office error, the priority claim was acknowledged. Therefore, this decision also serves as notification to the patentee that the Office intends to issue a certificate of correction in accordance with 37 CFR 1.322(b)(4), in order to rectify the error regarding the priority claim.

Accordingly, the office intends to issue a Certificate of Correction removing the claim for priority to Chinese Patent Application No. 02160568.8.

---

[1]Since the filing of the petition, the patent has been granted (Patent No. 6,852,633 issued February 8, 2005).

Patentee is given a ONE MONTH time limit to comment on the proposed correction. See 35 U.S.C. 254 and 37 CFR 1.322. If no objection is received from patentee, the Office will issue a certificate of correction indicating that the above identified patent is not entitled to a claim of priority. This time limit is NOT extendible under 37 CFR 1.136.

Deposit Account No. 20-1430 has been charged in the amount of $130.00 for the petition.

Any inquiries concerning this decision may be directed to Senior Petitions Attorney Patricia Faison-Ball at (571) 272-3212.

Brian Hearn
Special Petitions Examiner
Office of Petitions
Office of the Deputy Commissioner
for Patent Examination Policy

UNITED STATES PATENT AND TRADEMARK OFFICE

COMMISSIONER FOR PATENTS
UNITED STATES PATENT AND TRADEMARK OFFICE
P.O. BOX 1450
ALEXANDRIA, VA 22313-1450
www.uspto.gov

MICHAEL E. MARTIN
THE TRANE COMPANY
PATENT DEPARTMENT - 12-1
3600 PAMMEL CREEK ROAD
LA CROSSE, WI 54601

COPY MAILED

JUN 12 2006

OFFICE OF PETITIONS

In re Application of :
Hancock : DECISION ON PETITION
Application No. 10/796,703 :
Filed: March 9, 2004 :
Atty. Dkt. No.: TIR 2904, 2905 :

This is a decision on the petition under 37 C.F.R. § 1.137(b), filed May 8, 2006, to revive the above-identified application.

The petition is **GRANTED**.

This application became abandoned January 20, 2006 for failure to timely reply to the non-final Office action mailed October 19, 2005. The non-final Office action set a three (3) month shortened statutory period of time for reply. No petition for extension of time in accordance with 37 C.F.R. § 1.136 was timely submitted. This decision precedes Notice of Abandonment.

A grantable petition pursuant to 37 C.F.R. § 1.137(b) must be accompanied by: (1) the required reply to the outstanding Office action or notice, unless previously filed; (2) the petition fee as set forth in 37 C.F.R. § 1.17(m); (3) a statement that the entire delay in filing the required reply from the due date for the reply until the filing of a grantable petition pursuant to 37 C.F.R. § 1.137(b) was unintentional; and (4) any terminal disclaimer (and fee set forth in 37 C.F.R. § 1.20(d)) required pursuant to 37 C.F.R. § 1.137(c).

The instant petition has been reviewed and found in compliance with the provisions of 37 C.F.R. § 1.137(b). Accordingly, the failure to timely submit a proper reply to the non-final Office action is accepted as having been unintentionally delayed.

Pursuant to 37 CFR 1.136, an extension of time must be filed prior to the expiration of the maximum period obtainable for reply to avoid abandonment. Accordingly, since the request for two month extension of time submitted herewith was filed subsequent to the maximum period obtainable for reply, this fee is unnecessary. Petitioner may request a refund of the previously submitted $1,020.00 extension of time fee by writing to the Finance Office, Refund Section. A copy of this decision should accompany any request for refund.

This application will be forwarded to Technology Center 3700 for further processing.

Telephone inquiries concerning this matter may be directed to the undersigned at (571) 272-3205.

Alesia M. Brown
Petitions Attorney
Office of Petitions

UNITED STATES PATENT AND TRADEMARK OFFICE

Commissioner for Patents
United States Patent and Trademark Office
P.O. Box 1450
Alexandria, VA 22313-1450
www.uspto.gov

MICHAEL E. MARTIN
THE TRANE COMPANY
PATENT DEPARTMENT - 12-1
3600 PAMMEL CREEK ROAD
LA CROSSE WI 54601

COPY MAILED

APR 30 2007

OFFICE OF PETITIONS

In re Application of	:
Hancock	: DECISION ON PETITION
Application No. 10/796,703	:
Filed: March 9, 2004	:
Atty. Dkt. No.: TIR 2904, 2905	:

This decision is in response to the petition under 37 CFR 1.137(b), filed March 6, 2007.

The petition under 37 CFR 1.137(b) is **GRANTED**.

This application became abandoned for failure to timely submit a proper reply to the final Office action mailed August 1, 2006. The final Office action set a three (3) month shortened statutory period of time for reply. Notice of Abandonment was mailed February 26, 2007.

A grantable petition under 37 CFR 1.137(b) must be accompanied by: (1) the required reply; (2) the petition fee as set forth in 37 CFR 1.17(m); (3) a statement that the entire delay in filing the required reply from the due date of the reply until the filing of a grantable petition was unintentional. The Commissioner may require additional information where there is a question whether the delay was unintentional; and (4) any terminal disclaimer (and fee as set forth in 37 CFR 1.20(d)) required pursuant to paragraph (d) of this section.

The instant petition has been reviewed and found in compliance with the provisions of 37 CFR 1.137(b). Accordingly, the failure to timely submit a proper reply to the final Office action is accepted as having been unintentionally delayed.

This application is being forwarded to Technology Center 3700 for further processing.

Telephone inquiries related to this decision may be directed to the undersigned at (571) 272-3205.

Alesia M. Brown
Petitions Attorney
Office of Petitions

UNITED STATES PATENT AND TRADEMARK OFFICE

Commissioner for Patents
United States Patent and Trademark Office
P.O. Box 1450
Alexandria, VA 22313-1450
www.uspto.gov

HAMRE, SCHUMANN,MUELLER & LARSON
P.O. BOX 2902-0902
MINNEAPOLIS MN 55402

COPY MAILED

FEB 13 2007

OFFICE OF PETITIONS

In re Application of :
Toru Takayama :
Application No. 10/796,704 :
Filed: March 9, 2004 :
Attorney Docket No. 10873.1414US01 :

ON PETITION

This is a decision on the petition, filed February 6, 2007, under 37 CFR 1.313(c)(2) to withdraw the above-identified application from issue after payment of the issue fee.

The petition is **GRANTED.**

The above-identified application is withdrawn from issue for consideration of a submission under 37 CFR 1.114 (request for continued examination). See 37 CFR 1.313(c)(2).

Petitioner is advised that the issue fee paid on January 30, 2007 in the above-identified application cannot be refunded. If, however, the above-identified application is again allowed, petitioner may request that it be applied towards the issue fee required by the new Notice of Allowance.[1]

Telephone inquiries should be directed to the undersigned at (571) 272-3208.

The examiner of Technology Center AU 2828 will consider the request for continued examination under 37 CFR 1.114.

Karen Creasy

Karen Creasy
Petitions Examiner
Office of Petitions

---

[1] The request to apply the issue fee to the new Notice may be satisfied by completing and returning the new Issue Fee Transmittal Form PTOL-85(b), which includes the following language thereon: "Commissioner for Patents is requested to apply the Issue Fee and Publication Fee (if any) or re-apply any previously paid issue fee to the application identified above." Petitioner is advised that, whether a fee is indicated as being due or not, the Issue Fee Transmittal Form **must** be completed and timely submitted to avoid abandonment. Note the language in bold text on the first page of the Notice of Allowance and Fee(s) Due (PTOL-85).

UNITED STATES PATENT AND TRADEMARK OFFICE

Commissioner for Patents
United States Patent and Trademark Office
P.O. Box 1450
Alexandria, VA 22313-1450
www.uspto.gov

FISH & RICHARDSON PC
P.O. BOX 1022
MINNEAPOLIS MN 55440-1022

COPY MAILED

JUN 3 0 2008

OFFICE OF PETITIONS

In re Patent No. 7,304,036 :
Issue Date: December 4, 2007 :
Application No. 10/796,719 : NOTICE
Filed: March 9, 2004 :
Attorney Docket No. 14184-043001 :

This is a notice regarding your request for acceptance of a fee deficiency submission under 37 CFR 1.28. On September 1, 1998, the Court of Appeals for the Federal Circuit held that 37 CFR 1.28(c) is the sole provision governing the time for correction of the erroneous payment of the issue fee as a small entity. **See DH Technology v. Synergystex International, Inc. 154 F.3d 1333, 47 USPQ2d 1865 (Fed. Cir. Sept. 1, 1998).**

The Office no longer investigates or rejects original or reissue applications under 37 CFR 1.56. **1098 Off. Gaz. Pat. Office 502 (January 3, 1989)**. Therefore, nothing in this Notice is intended to imply that an investigation was done.

Your fee deficiency submission under 37 CFR 1.28 is hereby **ACCEPTED**.

This application is no longer entitled to small entity status. Accordingly, all future fees paid in this application must be paid at the large entity rate.

The file does not indicate a change of address has been submitted, although the address given on the petition differs from the address of record. If appropriate, a change of address should be filed in accordance with MPEP 601.03. A courtesy copy of this decision is being mailed to the address given on the petition; however, the Office will mail all future correspondence solely to the address of record.

Inquiries related to this communication should be directed to the undersigned at (571) 272-3213.

Cheryl Gibson-Baylor
Petitions Examiner
Office of Petitions

Irvin Dingle
Petitions Examiner

cc: Fish & Richardson P.C.
225 Franklin Street
Boston, MA 02110

USPTO
RECEIPTS ACCOUNTING

2008 MAR 11 PM 2:41

IFW

Attorney's Docket No.: 14184-043001

IN THE UNITED STATES PATENT AND TRADEMARK OFFICE

RECEIVED
MAR 13 2008
OFFICE OF PETITIONS

Applicant : Mark G. Currie et al.
Serial No. : 10/796,719
Filed : March 9, 2004
Patent No. : 7,304,036
Issue Date : December 4, 2007
Title : METHODS AND COMPOSITIONS FOR THE TREATMENT OF GASTROINTESTINAL DISORDERS

Art Unit :
Examiner :
Conf. No. :

06/30/2008 CKHLOK 00000007 10796719
01 FC:1501 140.00 OP

Commissioner for Patents
P.O. Box 1450
Alexandria, VA 22313-1450

NOTIFICATION TO WITHDRAW SMALL ENTITY STATUS (37 C.F.R. §1.28(B) AND PAYMENT OF DEFICIENT FEES (37 C.F.R. §1.28(C)

Applicants hereby notify the Patent and Trademark Office that the applicant is no longer claiming small entity status as of **September 1, 2007**. The issue fee was paid in this case on October 23, 2007 at the small entity rate in error. Accordingly, Applicants submit payment (via deposit account authorization) for the deficient issue fee which should have been paid at the large entity rate.

Adjustment date: 06/30/2008 CKHLOK
10/23/2007 INTEFSW 00006535 061050 10796719
01 FC:2501 720.00 CR

The deficiency in fees owed is calculated below.

Type of Fee Paid	Fee as Large Entity	Fee Originally Paid (small)	Deficiency
Issue Fee/Publication Fee	1740.00	1020.00	720.00
Total Deficiency Owed:			720.00

03/12/2008 DALLEN 00000003 061050 10796719
01 FC:1461 720.00 DA

Adjustment date: 06/30/2008 CKHLOK
03/12/2008 DALLEN 00000003 061050 10796719
01 FC:1461 720.00 CR

CERTIFICATE OF MAILING BY EFS-WEB FILING

I hereby certify that this paper was filed with the Patent and Trademark Office using the EFS-WEB system on this date: March 6, 2008

The Office is hereby authorized to charge Deposit Account No. 06-1050 in the amount of $720. Please reference Attorney Docket No. 14184-043001.

Respectfully submitted,

Date: 5 MARCH 2008

Anita L. Meiklejohn, Ph.D.
Reg. No. 35,283

Fish & Richardson P.C.
225 Franklin Street
Boston, MA 02110
Telephone: (617) 542-5070
Facsimile: (617) 542-8906

21868272.doc

UNITED STATES PATENT AND TRADEMARK OFFICE

COMMISSIONER FOR PATENTS
UNITED STATES PATENT AND TRADEMARK OFFICE
P.O. BOX 1450
ALEXANDRIA, VA 22313-1450
www.uspto.gov

HARNESS, DICKEY & PIERCE P.L.C.
5445 CORPORATE DRIVE
SUITE 200
TROY MI 48098

COPY MAILED
MAR 16 2009
OFFICE OF PETITIONS

In re Application of	:
Byers, et al.	: DECISION ON PETITION
Application No. 10/796,727	:
Filed: March 9, 2004	:
Atty. Dkt. No: MP0787	:

This decision is in response to the petition to withdraw the holding of abandonment under 37 CFR 1.181, filed December 29, 2008

The petition under 37 CFR 1.181 to withdraw the holding of abandonment is hereby **DISMISSED**.

Any request for reconsideration of this decision must be submitted within **TWO (2) MONTHS** from mail date of this decision. Extensions of time under 37 CFR 1.136(a) are permitted. The reconsideration request should include a cover letter entitled "Renewed Petition under 37 CFR 1.181." This is not a final agency decision.

The application became abandoned July 16, 2008 for failure to timely submit a proper reply to the final Office action mailed April 15, 2008. The final Office action set a three month shortened statutory period of time for reply. Notice of Abandonment was mailed November 19, 2008.

Petitioners assert non-receipt of the final Office action. Petitioners indicate that a search of the file jacket and the docket records indicate that the final Office action was not received. Petitioners have included a copy of the docket records which purport to establish non-receipt of the final Office action.

The showing required to establish non-receipt of an Office communication must include a statement from the practitioner describing the system used for recording an Office action received at the correspondence address of record with the USPTO. The statement should establish that the docketing system is sufficiently reliable. It is expected that the record would include, but not be limited to, the application number, attorney

docket number, the mail date of the Office action and the due date for the response. Practitioner must state that the Office action was not received at the correspondence address of record, and that a search of the practitioner's record(s), including any file jacket or the equivalent, and the application contents, indicates that the Office action was not received. A copy of the record(s) used by the practitioner where the non-received Office action would have been entered had it been received is required. A copy of the practitioner's record(s) required to show non-receipt of the Office action should include the master docket for the firm. That is, if a three month period for reply was set in the non-received Office action, a copy of the master docket report showing all replies docketed for a date three months from the mail date of the non-received Office action must be submitted as documentary proof of non-receipt of the Office action. If no such master docket exists, the practitioner should so state and provide other evidence such as, but not limited to, the following: the application file jacket; incoming mail log; calendar; reminder system; or the individual docket record for the application in question.

The instant petition does not establish non-receipt of the Notice in compliance with the procedures set forth at MPEP 711.03(c). Specifically, the petition fails to describe the system used for recording an Office action received at the correspondence address of record with the USPTO. It is unclear if the copy of the docket records provided by petitioners is a "master docket." Thus, it cannot be found that practitioner's docketing system is sufficiently reliable.

Any renewed petition must establish non-receipt of the final Office action as set forth at MPEP 711.03(c).

ALTERNATE VENUE

Petitioners may wish to consider filing a petition stating that the delay was unintentional. Petitioner's attention is directed to 37 CFR 1.137(b) which provides for the revival of an "unintentionally" abandoned application without a showing that the delay in prosecution or in late payment of an issue fee was "unavoidable". An "unintentional" petition under 37 CFR 1.137(b) must be accompanied by the required petition fee and reply.

The filing of a petition under 37 CFR 1.137(b) cannot be intentionally delayed and therefore must be filed promptly. A person seeking revival due to unintentional delay cannot make a

statement that the delay was unintentional unless the entire delay, including the delay from the date it was discovered that the application was abandoned until the filing of the petition to revive under 37 CFR 1.137(b), was unintentional. A statement that the delay was unintentional is not appropriate if petitioner intentionally delayed the filing of a petition for revival under 37 CFR 1.137(b).

Further correspondence with respect to this matter should be addressed as follows:

By mail:	**Mail Stop Petition** Commissioner for Patents P.O. Box 1450 Alexandria, VA 22313-1450
By facsimile:	(571) 273-8300
By hand delivery:	U.S. Patent and Trademark Office Customer Window, **Mail Stop Petition** Randolph Building 401 Dulany Street Alexandria, VA 22314

Telephone inquiries concerning this matter may be directed to the undersigned at (571) 272-3205.

/ALESIA M. BROWN/
Alesia M. Brown
Petitions Attorney
Office of Petitions

UNITED STATES PATENT AND TRADEMARK OFFICE

COMMISSIONER FOR PATENTS
UNITED STATES PATENT AND TRADEMARK OFFICE
P.O. BOX 1450
ALEXANDRIA, VA 22313-1450
www.uspto.gov

HARNESS, DICKEY & PIERCE P.L.C.
5445 CORPORATE DRIVE
SUITE 200
TROY MI 48098

COPY MAILED
JUN 19 2009
OFFICE OF PETITIONS

In re Application of :
Byers, et al. : DECISION ON PETITION
Application No. 10/796,727 :
Filed: March 9, 2004 :
Atty. Dkt. No: MP0787 :

This decision is in response to the renewed petition to withdraw the holding of abandonment under 37 CFR 1.181, filed May 15, 2009.

The petition under 37 CFR 1.181 to withdraw the holding of abandonment is hereby **GRANTED**.

The application was held abandoned July 16, 2008 for failure to timely submit a proper reply to the final Office action mailed April 15, 2008. The final Office action set a three month shortened statutory period of time for reply. Notice of Abandonment was mailed November 19, 2008. A petition under 37 CFR 1.181 was filed December 29, 2008 and dismissed March 16, 2009.

Petitioners continue to assert non-receipt of the final Office action. Petitioners have included, *inter alia*, a copy of the master docket records which purport to establish non-receipt of the final Office action.

The showing required to establish non-receipt of an Office communication must include a statement from the practitioner describing the system used for recording an Office action received at the correspondence address of record with the USPTO. The statement should establish that the docketing system is sufficiently reliable. It is expected that the record would include, but not be limited to, the application number, attorney docket number, the mail date of the Office action and the due date for the response. Practitioner must state that the Office action was not received at the correspondence address of record, and that a search of the practitioner's record(s), including any file jacket or the equivalent, and the application contents, indicates that the Office action was not received. A copy of the record(s) used by the practitioner where the non-received Office

action would have been entered had it been received is required. A copy of the practitioner's record(s) required to show non-receipt of the Office action should include the master docket for the firm. That is, if a three month period for reply was set in the non-received Office action, a copy of the master docket report showing all replies docketed for a date three months from the mail date of the non-received Office action must be submitted as documentary proof of non-receipt of the Office action. If no such master docket exists, the practitioner should so state and provide other evidence such as, but not limited to, the following: the application file jacket; incoming mail log; calendar; reminder system; or the individual docket record for the application in question.

The instant petition has been carefully reviewed and found in compliance with the procedure for establishing non-receipt of an Office communication set forth at MPEP 711.03(c).

In view thereof, the petition is hereby GRANTED. Moreover, the holding of abandonment is withdrawn and the Notice of Abandonment is hereby vacated.

This application is being returned to Group Art Unit 2186 for re-mailing of the final Office action. The time period for reply will be set in the newly mailed final Office action.

Telephone inquiries concerning this matter may be directed to the undersigned at (571) 272-3205.

/ALESIA M. BROWN/

Alesia M. Brown
Petitions Attorney
Office of Petitions

UNITED STATES PATENT AND TRADEMARK OFFICE

Commissioner for Patents
United States Patent and Trademark Office
P.O. Box 1450
Alexandria, VA 22313-1450
www.uspto.gov

SIEMENS CORPORATION
ATTN: ELSA KELLER, LEGAL ADMINISTRATOR
INTELLECTUAL PROPERTY DEPARTMENT
170 WOOD AVENUE SOUTH
ISELIN NJ 08830

MAILED

MAY 06 2010

OFFICE OF PETITIONS

In re Application of	:	
Marcelo Gomes Oliveira et al.	:	
Application No. 10/796,735	:	ON PETITION
Filed: March 9, 2004	:	
Attorney Docket No: 2003P18623 US	:	

This is a decision on the petition filed March 27, 2009 under 37 CFR 1.137(b),[1] to revive the above-identified application.

The petition is **GRANTED**.

This application became abandoned for failure to timely reply to the non-Final Office Action mailed February 20, 2008. A shortened statutory period of three months was set for replying to the non-Final Office Action. No response having been timely filed, this application became abandoned March 21, 2008. Accordingly, a Notice of Abandonment was mailed March 2, 2009.

Additionally, however, a review of the record reveals that a five month extension of time was also filed with the instant petition, however, pursuant to 37 CFR 1.136, an extension of time must be filed prior to the expiration of the maximum period obtainable for reply to avoid abandonment. Accordingly, since the $2350.00 extension of time fee submitted with

---

[1]Effective December 1, 1997, the provisions of 37 CFR 1.137(b) now provide that where the delay in reply was unintentional, a petition may be filed to revive an abandoned application or a lapsed patent pursuant to 37 CFR 1.137(b). A grantable petition filed under the provisions of 37 CFR 1.137(b) must be accompanied by:

(1) the required reply, unless previously filed. In a nonprovisional application abandoned for failure to prosecute, the required reply may be met by the filing of a continuing application. In a nonprovisional application filed on or after June 8, 1995, and abandoned for failure to prosecute, the required reply may also be met by the filing of a request for continued examination in compliance with § 1.114. In an application or patent, abandoned or lapsed for failure to pay the issue fee or any portion thereof, the required reply must be the payment of the issue fee or any outstanding balance thereof. In an application abandoned for failure to pay the publication fee, the required reply must include payment of the publication fee.

(2) the petition fee as set forth in 37 CFR 1.17(m);

(3) a statement that the entire delay in filing the required reply from the due date for the reply until the filing of a grantable petition pursuant to 37 CFR 1.137(b) was unintentional. The Commissioner may required additional information where there is a question whether the delay was unintentional; and

(4) any terminal disclaimer (and fee as set forth in 37 CFR 1.20(d)) required pursuant to 37 CFR 1.137(c)).

the petition on March 27, 2009, was subsequent to the maximum period obtainable for reply, this fee is unnecessary and will be credit back to deposit account no. 23-1925.

This matter is being referred to Technology Center 2614 for appropriate action on the amendment filed March 27, 2009.

Telephone inquiries concerning this matter should be directed to the undersigned Petitions Attorney at (571) 272-3212.

Patricia Faison-Ball

Patricia Faison-Ball
Senior Petitions Attorney
Office of Petitions

UNITED STATES PATENT AND TRADEMARK OFFICE

UNITED STATES DEPARTMENT OF COMMERCE
United States Patent and Trademark Office
Address: COMMISSIONER FOR PATENTS
P.O. Box 1450
Alexandria, Virginia 22313-1450
www.uspto.gov

INTEL CORPORATION
c/o CPA Global
P.O. BOX 52050
MINNEAPOLIS, MN 55402

Mail Date: 04/21/2010

Applicant	: Adrian P. Stephens	: DECISION ON REQUEST FOR
Patent Number	: 7583975	: RECALCULATION of PATENT
Issue Date	: 09/01/2009	: TERM ADJUSTMENT IN VIEW
Appliction No	: 10/796,756	: OF WYETH AND NOTICE OF INTENT TO
Filed	: 03/08/2004	: ISSUE CERTIFICATE OF CORRECTION
		:

The Request for Recalculation is **GRANTED** to the extent indicated.

The patent term adjustment has been determined to be **1137** days. The USPTO will *sua sponte* issue a certificate of correction reflecting the amount of PTA days determined by the recalculation.

Prior to the issuance of the certificate of correction, the USPTO will afford patentee an opportunity to be heard and request reconsideration. Accordingly, patentee has **one month or thirty (30) days**, whichever is longer, to file a request for reconsideration of this patent term adjustment calculation. See 35 U.S.C. 154(b)(3)(B)(ii) and 37 CFR 1.322(a)(4). No extensions of time will be granted under 37 CFR 1.136.

Patentee should use document code PET.OP if electronically filing a request for reconsideration of this patent term adjustment calculation. The patentee must also include the information required by 37 CFR 1.705(b)(2) and the fee required by 37 CFR 1.18(e). If patentee does not file a timely request for reconsideration of this patent term adjustment calculation including the information required by 37 CFR 1.705(b)(2) and the fee required by 37 CFR 1.18(e), the USPTO will issue a certificate of correction reflecting the PTA determination noted above.

Patentee should be aware that in order to preserve the right to review in the United States District Court for the District of Columbia of the USPTO patent term adjustment determination, patentee must ensure that he or she also take the steps required under 35 U.S.C. 154(b)(4)(A) in a timely manner. Nothing in the request for recalculation should be construed as providing an alternative time frame for commencing a civil action under 35 U.S.C. 154(b)(4)(A).

Any questions concerning this decision should be directed to the Office of Patent Legal Administration at 571-272-7702.

UNITED STATES PATENT AND TRADEMARK OFFICE

Commissioner for Patents
United States Patent and Trademark Office
P.O. Box 1450
Alexandria, VA 22313-1450
www.uspto.gov

APPLICATION NUMBER	FILING/RECEIPT DATE	FIRST NAMED APPLICANT	ATTORNEY DOCKET NUMBER
11/796,759	04/30/2007	Tammy L. Wilson	1579071US1AP

SAND & SEBOLT
AEGIS TOWER, SUITE 1100
4940 MUNSON STREET, NW
CANTON OH 44718-3615

DATE MAILED: June 22, 2007

DECISION GRANTING PETITION UNDER 37 CFR 1.138(d)
The declaration of express abandonment is recognized

This is in response to the petition under 37 CFR 1.138(d) filed May 29, 2007, requesting for a refund of any previously paid search fee and excess claims fee in the above-identified application.

The petition is granted.

The express abandonment is recognized. Any previously paid search fee and excess claims fee are hereby refunded.

Any inquiries concerning this decision should be directed to the Pre-Grant Publication Division at (703) 605-4283.

Barbara J. Debnam
Pre-Grant Publication Division

UNITED STATES PATENT AND TRADEMARK OFFICE

Commissioner for Patents
United States Patent and Trademark Office
P.O. Box 1450
Alexandria, VA 22313-1450
www.uspto.gov

MERCHANT & GOULD P.C.
P.O. BOX 2903
MINNEAPOLIS MN 55402-0903

COPY MAILED

APR 06 2007

OFFICE OF PETITIONS

In re Application of

HAMMOND, Neal A.
Application No. 10/796,786
Filed: March 09, 2004
Attorney Docket No. **11367.1USC4**

DECISION ON PETITION
TO WITHDRAW
FROM RECORD

This is a decision on the Request to Withdraw as attorney or agent of record under 37 C.F.R. § 1.36(b), filed January 22, 2007.

The request is **APPROVED**.

A grantable request to withdraw as attorney/agent of record must be signed by every attorney/agent seeking to withdraw or contain a clear indication that one attorney is signing on behalf of another/others. A request to withdraw will not be approved unless at least 30 (thirty) days would remain between the date of approval and the later of the expiration date of a time to file a response or the expiration date of the maximum time period which can be extended under 37 C.F.R. § 1.136(a).

The request was signed by Sarah M. Monfeldt. The correspondence address of record remains unchanged.

Telephone inquiries concerning this decision should be directed to Tredelle Jackson at 571-272-2783.

Monica A. Graves
Petitions Examiner
Office of Petitions

UNITED STATES PATENT AND TRADEMARK OFFICE

Commissioner for Patents
United States Patent and Trademark Office
P.O. Box 1450
Alexandria, VA 22313-1450
www.uspto.gov
DNV 10-04

RALPH E. JOCKE
231 SOUTH BROADWAY
MEDINA OH 44256

COPY MAILED

OCT 25 2004

OFFICE OF PETITIONS

In re Application of	:	
Eastman et al.	:	
Application No. 10/796,792	:	ON PETITION
Filed: 9 March, 2004	:	
Attorney's Docket No. D-1218 R2	:	

This is a decision on the petition filed on 24 September, 2004, requesting that the above-identified application be accorded a filing date of 9 March, 2004, with Pages 2 and 3 of the specification as a part of the original disclosure.

The petition is granted.

The application was filed on 9 March, 2004.

Accordingly, on 3 September, 2004, Initial Patent Examination Division mailed a Notice to File Missing Parts of Nonprovisional Application, stating that the application had been accorded a filing date of 9 March, 2004, but that Pages 2 and 3 of the specification (description and claims) appeared to have been omitted. The statutory basic filing fee, an executed oath or declaration, and the surcharge for their late filing was also required.

In response, on 24 September, 2004, the present petition and a copy of Pages 2 and 3 of the specification were filed, along with an executed declaration and the required filing fees. Petitioners argue that Pages 2 and 3 of the specification were filed with the other application papers on 9 March, 2004, but were subsequently misplaced in the U.S. Patent and Trademark Office (Office). In support, a copy of petitioner's postcard receipt was supplied with the present petition. The postcard

receipt shows an Office date stamp of 03/09/04, the above-identified application number, and identifies the application by the first named inventor's last name, attorney docket number, and invention title and acknowledges receipt of, *inter alia*, 90 pages of specification. Petitioner requests that the application, including Pages 2 and 3 of the specification, be accorded a filing date of 9 March, 2004.

A review of the record reveals that no Pages 2 and 3 of the specification have been located among the application papers received on 9 March, 2004. However, the evidence is convincing that the application papers deposited on 9 March, 2004, included Pages 2 and 3 of the specification, which were subsequently misplaced in the Office. Therefore, the application, including Pages 2 and 3 of the specification, is entitled to a filing date of 9 March, 2004.

The "Notice" mailed on 3 September, 2004, is vacated to the extent that it stated that Pages 2 and 3 of the specification appear to have been omitted.

In view of the above, the petition is granted. No petition fee is due and none has been charged.

The application will be processed with the copy of Pages 2 and 3 supplied on 24 September, 2004, as a part of the original disclosure.

The application is being returned to Initial Patent Examination Division for further processing with a filing date of 9 March, 2004, using the application papers filed on that date, and the copy of Pages 2 and 3 of the specification supplied with the present petition.

Telephone inquiries should be directed to the undersigned at 571-272-3231.

D Wood

Douglas I. Wood
Senior Petitions Attorney
Office of Petitions

16 NOV 2004

UNITED STATES PATENT AND TRADEMARK OFFICE

COMMISSIONER FOR PATENTS
UNITED STATES PATENT AND TRADEMARK OFFICE
P.O. BOX 1450
ALEXANDRIA, VA 22313-1450
www.uspto.gov

Glenn E.J. Murphy
Henkel Corporation
Patent Law Department
2200 Renaissance Blvd., Suite 200
Gulph Mills, PA 19406

In re Application of KLAUCK, et al. Application No.: 10/796,807 PCT No.: PCT/EP02/08746 Int. Filing Date: 06 August 2002 Priority Date: 08 August 2001 Atty. Docket No.: H5333 PCT/US For: DEVICE AND METHOD FOR APPLYING A SOLID SUBSTANCE THAT CAN BE APPLIED BY THE ACTION OF HEAT	DECISION ON PETITION UNDER 37 CFR 1.137(b)

This is a decision on applicant's "Petition to Revive Abandoned International Application" originally filed 09 March 2004 and again on 01 November 2004 in the above-captioned application. The petition fee under 37 CFR 1.17(m) has been paid.

BACKGROUND

On 06 August 2002, applicant filed international application PCT/EP02/08746 which claimed a priority date of 08 August 2001. Pursuant to 37 CFR 1.495, the deadline for payment of the basic national fee in the United States was to expire 30 months from the international filing date, 08 February 2004.

On 09 March 2004, applicant filed the present petition to revive pursuant to 37 CFR 1.137(b) accompanied by a continuation application.

DISCUSSION

A petition under 37 CFR 1.137(b) requesting that the application be revived on the grounds of unintentional abandonment must be accompanied by (1) the required reply, (2) the petition fee required by law, (3) a statement that the, "entire delay in filing the required reply from the due date for the reply until the filing of a grantable petition pursuant to this paragraph was unintentional" and (4) any terminal disclaimer and fee pursuant to 37 CFR 1.137(c) (where required).

Regarding item (1), applicant has supplied the proper reply in the form of the filing of a continuation application.

As to item (2), the petition fee has been submitted.

With regard to Item (3), applicant's statement that "entire delay in filing the 35 U.S.C. 371(c) requirement from their due date until the filing of a grantable petition under 37 CFR 1.137(b) was unintentional" and the prompt filing of the petition satisfies the requirement of 37 CFR 1.137(b)(3).

As to Item (4), the terminal disclaimer is not required since this application was filed after 08 June 1995.

CONCLUSION

Applicant's petition to revive for the purposes of continuity only is **GRANTED**.

International application PCT/EP02/08746 is being revived for purposes of continuity only and since continuity has been established by this decision reviving the international application, the international application is again abandoned.

Derek A. Putonen
Attorney Advisor
Office of PCT Legal Administration
Tel: (571) 272-3294
Fax: (571) 273-0459

UNITED STATES PATENT AND TRADEMARK OFFICE

COMMISSIONER FOR PATENTS
UNITED STATES PATENT AND TRADEMARK OFFICE
P.O. BOX 1450
ALEXANDRIA, VA 22313-1450
www.uspto.gov

Paper No.

SNELL & WILMER
ONE ARIZONA CENTER
400 EAST VAN BUREN
PHOENIX, AZ 85004-0001

COPY MAILED

SEP 1 9 2005

OFFICE OF PETITIONS

In re Application of	:	
Kozicki et al.	:	DECISION ON PETITION
Application No. 10/796,808	:	
Filed: March 8, 2004	:	
Atty Docket No. 29089.4300	:	

This is a decision on the "PETITION TO ACCEPT UNINTENTIONALLY DELAYED CLAIM UNDER 35 USC 119(E) FOR BENEFIT OF PRIOR-FILED PROVISIONAL APPLICATION," filed May 25, 2005. Applicants petition for acceptance of the priority claim of the present application to Provisional Application Serial No. 60/452,648.

The petition is **DISMISSED**.

A petition under 37 CFR 1.78(a)(6), to accept an unintentionally delayed claim under 35 U.S.C. § 119(e) for the benefit of a prior filed provisional application, is only applicable to those applications filed on or after November 29, 2000. Further, the petition is appropriate only after expiration of the period specified in 37 CFR 1.78(a)(5), and must be filed during the pendency of the nonprovisional application. In addition, the petition must be accompanied by:

(1) the surcharge set forth in 37 CFR 1.17(t);

(2) a statement that the entire delay between the date the claim was due under 37 CFR 1.78(a)(5) and the date the claim was filed was unintentional; and

(3) the reference to the prior filed provisional application, supplied in an application data sheet (ADS)(37 CFR 1.76) or as an amendment in the first sentence of the specification following the title. See 35 USC 119(e) and 37 CFR 1.78(a)(5). The Director may require additional information where there is a question whether the delay was unintentional.

The instant pending nonprovisional application was filed on March 8, 2004, and the claim for priority herein is submitted after expiration of the period specified in 37 CFR 1.78(a)(5). The instant petition includes the required surcharge and the required statement of unintentional delay.

Moreover, the present application was filed on Monday, March 8, 2004, within twelve months[1] of the filing date of the prior provisional application, Application No. 60/452,648, which was filed on March 7, 2003, and for which priority is claimed. A reference to the prior provisional application has been included as an amendment to the first sentence of the specification following the title. However, the amendment is not acceptable.

Under 35 U.S.C. 119(e), as contained in Public Law 103-465, a later filed nonprovisional application under 35 U.S.C. 111(a) that is filed within twelve months of an earlier provisional application may claim priority benefits based on the earlier filed provisional application so long as both applications have at least one inventor in common. The amendment includes claims for benefit of other provisional applications under 35 U.S.C. 119(e). However, the amendment does not make clear that any nonprovisional application in the chain was filed within twelve months from the filing date of those provisional applications. The amendment does not identify the intermediate nonprovisional applications that directly claim the benefit of the provisional application and were filed within 12 months of the filing date of the provisional application. Although an application that itself directly claims the benefit of a provisional application is not required to specify the relationship to the provisional application, if the instant nonprovisional application is not filed within the 12 month period, but claims the benefit of an

[1] 37 CFR 1.7(b) provides that: If the day that is twelve months after the filing date of a provisional application under 35 U.S.C. 111(b) and § 1.53(c) falls on Saturday, Sunday, or on a Federal holiday within the District of Columbia, the period of pendency shall be extended to the next succeeding secular or business day, which is not a Saturday, Sunday, or a Federal holiday.

intermediate nonprovisional application under 35 U.S.C. 120 that was filed within 12 months from the filing date of the provisional application and claimed the benefit of the provisional application, the intermediate application must be clearly identified as claiming the benefit of the provisional application so that the Office can determine whether the intermediate nonprovisional application was filed within 12 months of the provisional application and thus, whether the claim is proper.

Where the benefit of more than one provisional application is being claimed, the intermediate nonprovisional application(s) claiming the benefit of each provisional application must be indicated. Applicant must state, for example, "this application is continuation of Application No. D, filed ---, which is a continuation-in-part of Application No. C, filed ---, Application No. D claims the benefit of provisional Application No. B, filed ---, and Application No. C claims the benefit of provisional Application No. A, filed ---." If a benefit claim to a provisional application is submitted without an indication that an intermediate application directly claims the benefit of the provisional application and the instant nonprovisional application is not filed within the 12 month period or the relationship between each nonprovisional application is not indicated, the Office will not recognize such benefit claim and will not include the benefit claim on the filing receipt.

Submission of a proper reference is required.

In view thereof, the petition must be dismissed.

As authorized, the $1,370 fee required by 37 CFR 1.78(a)(6) has been charged to petitioner's Deposit Account No. 19-2814

Further correspondence with respect to this decision should be addressed as follows:

By mail: Mail Stop Petition
Commissioner for Patents
P.O. Box 1450
Alexandria, VA 22313-1450

By fax: (571) 273-8300
ATTN: Office of Petitions

By hand: Customer Service Window
Randolph Building
401 Dulany Street
Alexandria, VA 22314

Any inquiries concerning this decision may be directed to Senior Petitions Attorney Nancy Johnson at (571) 272-3219.

Frances Hicks

Frances Hicks
Lead Petitions Examiner
Office of Petitions

UNITED STATES PATENT AND TRADEMARK OFFICE

Commissioner for Patents
United States Patent and Trademark Office
P.O. Box 1450
Alexandria, VA 22313-1450
www.uspto.gov

SNELL & WILMER
ONE ARIZONA CENTER
400 EAST VAN BUREN
PHOENIX, AZ 85004-0001

COPY MAILED
APR 12 2006
OFFICE OF PETITIONS

In re Application of :
Kozicki et al. : DECISION ON PETITION
Application No. 10/796,808 :
Filed: March 8, 2004 :
Atty Docket No. 29089.4300 :

This is a decision on the "REQUEST FOR RECONSIDERATION OF PETITION UNDER 37 C.F.R. 1.182," filed December 27, 2005, which is properly treated as a renewed petition under 37 CFR 1.78(a)(6). Applicants petition for acceptance of the priority claim of the present application to Provisional Application Serial No. 60/452,648.

The petition is **GRANTED**.

A petition under 37 CFR 1.78(a)(6), to accept an unintentionally delayed claim under 35 U.S.C. § 119(e) for the benefit of a prior filed provisional application, is only applicable to those applications filed on or after November 29, 2000. Further, the petition is appropriate only after expiration of the period specified in 37 CFR 1.78(a)(5), and must be filed during the pendency of the nonprovisional application. In addition, the petition must be accompanied by:

(1) the surcharge set forth in 37 CFR 1.17(t);

(2) a statement that the entire delay between the date the claim was due under 37 CFR 1.78(a)(5) and the date the claim was filed was unintentional; and

(3) the reference to the prior filed provisional application, supplied in an application data sheet (ADS)(37 CFR 1.76) or as an amendment in the first sentence of the specification following the title. See 35 USC 119(e) and 37 CFR 1.78(a)(5). The Director may require additional information where there is a question whether the delay was unintentional.

The instant pending nonprovisional application was filed on March 8, 2004, and the claim for priority herein is submitted after expiration of the period specified in 37 CFR 1.78(a)(5). The initial petition included the required surcharge and the required statement of unintentional delay. Moreover, the present application was filed on Monday, March 8, 2004, within twelve months[1] of the filing date of the prior provisional application, Application No. 60/452,648, which was filed on March 7, 2003, and for which priority is claimed. A reference to the prior provisional application has been included as an amendment to the first sentence of the specification following the title.

However, the petition was dismissed because the amendment was not acceptable. Submission of a proper reference, including proper identification of the intermediate applications, was required.

On instant request for reconsideration, applicants submitted an amendment to correct this deficiency. The amendment has been reviewed and found acceptable.

Accordingly, now having found that the instant petition for acceptance of an unintentionally delayed claim for the benefit of priority under 35 U.S.C. § 119(e) to the prior-filed provisional application satisfies the conditions of 37 CFR 1.78(a)(6), the petition is granted.

The granting of the petition to accept the delayed benefit claim to the prior-filed application under 37 CFR 1.78(a)(6) should not be construed as meaning that the instant application is entitled to the benefit of the prior-filed application. In

---

[1] 37 CFR 1.7(b) provides that: If the day that is twelve months after the filing date of a provisional application under 35 U.S.C. 111(b) and § 1.53(c) falls on Saturday, Sunday, or on a Federal holiday within the District of Columbia, the period of pendency shall be extended to the next succeeding secular or business day, which is not a Saturday, Sunday, or a Federal holiday.

order for the instant application to be entitled to the benefit of the prior-filed application, all other requirements under 35 U.S.C. § 119 and 37 CFR 1.78(a)(4) and (a)(5) must be met. Similarly, the fact that the corrected Filing Receipt accompanying this decision on petition includes the prior-filed application should not be construed as meaning that applicant is entitled to the claim for benefit of priority to the prior-filed application noted thereon. Accordingly, the examiner will, in due course, consider these benefit claims and determine whether the instant application is entitled to the benefit of the earlier filing date.

This application is being forwarded to Technology Center Art Unit 2823 for consideration by the Examiner of applicant's claim under 35 U.S.C. § 119, and 37 CFR 1.78(a)(5) and (6) for the benefit of priority to the prior-filed application.

Telephone inquiries concerning this matter should be directed to Senior Petitions Attorney Nancy Johnson at (571) 272-3219.

Frances Hicks

Frances Hicks
Petitions Examiner
Office of Petitions

Enclosure: Corrected Filing Receipt

UNITED STATES PATENT AND TRADEMARK OFFICE

COMMISSIONER FOR PATENTS
UNITED STATES PATENT AND TRADEMARK OFFICE
P.O. BOX 1450
ALEXANDRIA, VA 22313-1450
www.uspto.gov

QUARLES & BRADY STREICH LANG, LLP
ONE SOUTH CHURCH AVENUE
SUITE 1700
TUCSON, AZ 85701-1621

COPY MAILED

JUL 21 2005

OFFICE OF PETITIONS

In re Application of	:	
Pitts et al.	:	
Application No. 10/796,814	:	ON PETITION
Filed: March 9, 2004	:	
Attorney Docket No.	:	
111732.00012	:	

This is a decision on the Petition Under 37 CFR 1.78 to Accept an Unintentionally Delayed Domestic Priority Claim, filed May 10, 2005, to accept an unintentionally delayed claim under 35 U.S.C. § 120 for the benefit of priority to the prior-filed nonprovisional applications set forth in the amendment filed concurrently with the instant petition. The petition is properly treated under 37 CFR 1.78(a)(3).

The petition is **GRANTED**.

A petition for acceptance of a claim for late priority under 37 CFR 1.78(a)(3) is only applicable to those applications filed on or after November 29, 2000. Further, the petition is appropriate only after the expiration of the period specified in 37 CFR 1.78(a)(2)(ii). In addition, the petition under 37 CFR 1.78(a)(3) must be accompanied by:

> **(1)** the reference required by 35 U.S.C. § 120 and 37 CFR 1.78(a)(2)(i) of the prior-filed application, unless previously submitted;
> **(2)** the surcharge set forth in § 1.17(t); and
> **(3)** a statement that the entire delay between the date the claim was due under 37 CFR 1.78(a)(2)(ii) and the date the claim was filed was unintentional.
>
> The Commissioner may require additional information where there is a question whether the delay was unintentional.

The instant nonprovisional application was filed after November 29, 2000, and the claim herein for the benefit of priority to the prior-filed nonprovisional applications is submitted after

expiration of the period specified in 37 CFR 1.78(a)(2)(ii). Therefore, this is a proper petition under 37 CFR 1.78(a)(3).

The petition complies with the requirements for a grantable petition under 37 CFR 1.78(a)(3) in that (1) a reference to the prior-filed nonprovisional applications has been included in an amendment to the first sentence of the specification following the title, as provided by 37 CFR 1.78(a)(2)(iii); (2) the surcharge fee required by 37 CFR 1.17(t) has been submitted; and (3) the petition contains a proper statement of unintentional delay. Accordingly, having found that the instant petition for acceptance of an unintentionally delayed claim for the benefit of priority under 35 U.S.C. § 120 to the prior-filed nonprovisional applications satisfies the conditions of 37 CFR 1.78(a)(3), the petition is granted.

The granting of the petition to accept the delayed benefit claim to the prior-filed applications under 37 CFR 1.78(a)(3) should not be construed as meaning that the instant application is entitled to the benefit of the prior-filed applications. In order for the instant application to be entitled to the benefit of the prior-filed applications, all other requirements under 35 U.S.C. § 120 and 37 CFR 1.78(a)(1) and (a)(2) must be met. Similarly, the fact that the corrected Filing Receipt accompanying this decision on petition includes the prior-filed applications should not be construed as meaning that applicant is entitled to the claim for benefit of priority to the prior-filed applications noted thereon. Accordingly, the examiner will, in due course, consider this benefit claim and determine whether the instant application is entitled to the benefit of the earlier filing date.

A corrected Filing Receipt, which includes the priority claim to the prior-filed nonprovisional application, accompanies this decision on petition.

Any inquiries concerning this decision may be directed to Petitions Attorney Derek L. Woods at (571) 272-3232. All other inquiries concerning either the examination procedures or status of the application should be directed to the Technology Center.

This application is being referred to Technology Center Art Unit 1742 for appropriate action on the amendment filed May 10, 2005, including consideration by the examiner of applicant's entitlement to claim benefit of priority under 35 U.S.C. § 120 to the prior-filed nonprovisional applications.

Frances Hicks

Frances Hicks
Lead Petitions Examiner
Office of Petitions

Enclosure: Corrected Filing Receipt

UNITED STATES PATENT AND TRADEMARK OFFICE

Commissioner for Patents
United States Patent and Trademark Office
P.O. Box 1450
Alexandria, VA 22313-1450
www.uspto.gov

SoCAL IP LAW GROUP LLP
310 N. WESTLAKE BLVD. STE 120
WESTLAKE VILLAGE CA 91362

COPY MAILED

JUL 1 0 2006

OFFICE OF PETITIONS

In re Application of
Yuichiro Itakura, et al.
Application No. 10/796,826
Filed: March 9, 2004
Attorney Docket No. U000-P03237US

DECISION ON PETITION TO WITHDRAW FROM RECORD

This is a decision on the Request to Withdraw as attorney or agent of record under 37 C.F.R. § 1.36(b), filed July 27, 2005.

The request is **NOT APPROVED**.

A grantable request to withdraw as attorney/agent of record must be signed by every attorney/agent seeking to withdraw or contain a clear indication that one attorney is signing on behalf of another/others. A request to withdraw will not be approved unless at least 30 (thirty) days would remain between the date of approval and the later of the expiration date of a time to file a response or the expiration date of the maximum time period which can be extended under 37 C.F.R. § 1.136(a).

The request cannot be approved because the request at this time since the reasons provided do not meet any of the conditions under the mandatory or permissive categories enumerated in 37 CFR 10.40. Section 10.40 of Title 37 of the Code of Federal Regulation states, "[a] practitioner shall not withdraw from employment in a proceeding before the Office without permission from the Office.]" More specifically, 37 CFR 10.40 states, "[i]f paragraph (b) of this section is not applicable, a practitioner may not request permission to withdraw in matter pending before the Office unless such request or such withdrawal is" for one the permissive reasons listed in 37 CFR 10.40(c). The reasons set forth in the request, the application has been transferred to a different firm at the owner's instructions, do not appear to meet any of the conditions set forth in 37 CFR 10.40.

All future communications from the Office will continue to be directed to the above-listed address until otherwise notified by applicant.

Telephone inquiries concerning this decision should be directed to Cheryl Gibson-Baylor at 571-272- 3213.

Cheryl Gibson-Baylor
Petitions Examiner
Office of Petitions

Conferee:

UNITED STATES PATENT AND TRADEMARK OFFICE

Commissioner for Patents
United States Patent and Trademark Office
P.O. Box 1450
Alexandria, VA 22313-1450
www.uspto.gov

J C PATENTS, INC.
4 VENTURE, SUITE 250
IRVINE CA 92618

COPY MAILED

MAR 0 5 2007

OFFICE OF PETITIONS

In re Application of :
Itakura, et al. : DECISION ON PETITION
Application No. 10/796,826 :
Filed: March 9, 2004 :
Atty. Dkt. No.: JCLA21100 :

The above-identified application has been forwarded to the Office of Petitions for consideration of the petition to withdraw the holding of abandonment under 37 CFR 1.181 filed February 7, 2007.

The petition under 37 CFR 1.181 to withdraw the holding of abandonment is hereby **DISMISSED**.

Any request for reconsideration of this decision must be submitted within **TWO (2) MONTHS** from mail date of this decision. Extensions of time under 37 CFR 1.136(a) are permitted. The reconsideration request should include a cover letter entitled "Renewed Petition under 37 CFR 1.181." This is not a final agency decision.

This application became abandoned October 18, 2006 for failure to timely submit a proper reply to the non-final Office action mailed July 17, 2006. The non-final Office action set a three month shortened statutory period of time for reply. Notice of Abandonment was mailed February 5, 2007.

Petitioners argue non-receipt of the Office action mailed July 17, 2006. Petitioners further argue that the Office action was mailed to an incorrect change of correspondence address, a changing of correspondence address having been properly submitted.

In the absence of any irregularity in the mailing of the Office action, there is a strong presumption that the Office action was properly mailed to practitioner at the address of record. This presumption may be overcome by a showing that the Office action was not in fact received. The showing required to establish non-receipt of an Office communication must include a statement from the practitioner stating that the Office communication was not

received by the practitioner and attesting to the fact that a search of the file jacket and docket records indicates that the Office communication was not received. A copy of the docket record where the non-received Office communication would have been entered had it been received and docketed must be attached to and referenced in practitioner's statement. *See*, MPEP 711.03(c). The showing outlined above may not be sufficient if there are circumstances that point to a conclusion that the Office communication may have been lost after receipt rather than a conclusion that the Office communication was lost in the mail.

Where an application becomes abandoned as a consequence of a change of correspondence address (the Office action being mailed to the old, uncorrected address and failing to reach the applicant in sufficient time to permit a timely reply), petitioner is required to establish that due care was taken to adhere to the requirement for prompt notification in each concerned application of the change of address (See, MPEP 601.03), and must include an adequate showing that a timely notification of the change of address was filed in the application concerned, and in a manner reasonably calculated to call attention to the fact that it was a notification of a change of address. See, MPEP 711.03(c).

The non-final Office action was mailed July 17, 2006. A revocation of power of attorney was received July 20, 2006. Petitioners argue that the revocation of power of attorney bore a certificate of mailing address of July 17, 2006, the date that the non-final Office action was mailed and that as a result of the properly submitted revocation of power of attorney, the holding of abandonment should be withdrawn.

In accordance with 37 CFR 1.8(a), "[e]xcept in the situations enumerated in paragraph (a)(2) of this section or as otherwise expressly excluded in this chapter, correspondence required to be filed in the U.S. Patent and Trademark Office within a set period of time will be considered as being timely filed if the procedure described in this section is followed. **The actual date of receipt will be used for all other purposes.**" (Emphasis added.

The revocation of power of attorney was actually received on July 20, 2006. Accordingly, Office records indicate the Office communication was properly mailed to the correspondence address of record at the time of mailing. Accordingly, there was no

irregularity in mailing the Office communication on the part of the United States Patent and Trademark Office.

The specific rule for obtaining a filing date as of the date of deposit in rather than the date of receipt at the Office is 37 CFR 1.10. There is no indication that petitioners utilized the provisions of Rule 10 in submitting the revocation of power of attorney. Accordingly, the revocation of power of attorney is deemed received July 20, 2006, subsequent to the mailing of the non-final Office action.

ALTERNATE VENUE

Petitioner may wish to consider filing a petition stating that the delay was unintentional. Petitioner's attention is directed to 37 CFR 1.137(b) which provides for the revival of an "unintentionally" abandoned application without a showing that the delay in prosecution or in late payment of an issue fee was "unavoidable". An "unintentional" petition under 37 CFR 1.137(b) must be accompanied by the required petition fee and reply.

The filing of a petition under 37 CFR 1.137(b) cannot be intentionally delayed and therefore must be filed promptly. A person seeking revival due to unintentional delay cannot make a statement that the delay was unintentional unless the entire delay, including the delay from the date it was discovered that the application was abandoned until the filing of the petition to revive under 37 CFR 1.137(b), was unintentional. A statement that the delay was unintentional is not appropriate if petitioner intentionally delayed the filing of a petition for revival under 37 CFR 1.137(b).

Further correspondence with respect to this matter should be addressed as follows:

By mail:	**Mail Stop Petition** Commissioner for Patents P.O. Box 1450 Alexandria, VA 22313-1450
By facsimile:	(571) 273-8300
By hand delivery:	U.S. Patent and Trademark Office Customer Window, **Mail Stop Petition** Randolph Building 401 Dulany Street Alexandria, VA 22314

Telephone inquiries concerning this matter may be directed to the undersigned at (571) 272-3205.

Alesia M. Brown
Petitions Attorney
Office of Petitions

UNITED STATES PATENT AND TRADEMARK OFFICE

COMMISSIONER FOR PATENTS
UNITED STATES PATENT AND TRADEMARK OFFICE
P.O. BOX 1450
ALEXANDRIA, VA 22313-1450
www.uspto.gov

J C PATENTS, INC.
4 VENTURE, SUITE 250
IRVINE CA 92618

COPY MAILED

JUN 21 2007

OFFICE OF PETITIONS

In re Application of :
Itakura, et al. : DECISION ON PETITION
Application No. 10/796,826 :
Filed: March 9, 2004 :
Atty. Dkt. No.: JCLA21100 :

This decision is in response to the petition renewed under 37 CFR 1.137(b), filed April 30, 2007.

The petition is **DISMISSED**.

Any request for reconsideration of this decision must be submitted within **TWO (2) MONTHS** from mail date of this decision. Extensions of time under 37 CFR 1.136(a) are permitted. The reconsideration request should include a cover letter entitled "Renewed Petition under 37 CFR 1.137(b)." This is not a final agency decision.

This application became abandoned October 18, 2006 for failure to timely submit a proper reply to the non-final Office action mailed July 17, 2006. The non-final Office action set a three month shortened statutory period of time for reply. Notice of Abandonment was mailed February 5, 2007.

A grantable petition pursuant to 37 C.F.R. § 1.137(b) must be accompanied by: (1) the required reply to the outstanding Office action or notice, unless previously filed; (2) the petition fee as set forth in 37 C.F.R. § 1.17(m); (3) a statement that the entire delay in filing the required reply from the due date for the reply until the filing of a grantable petition pursuant to 37 C.F.R. § 1.137(b) was unintentional; and (4) any terminal disclaimer (and fee set forth in 37 C.F.R. § 1.20(d)) required pursuant to 37 C.F.R. § 1.137(c).

The instant petition fails to satisfy requirement (2) set forth above in that the petition fee has not been received. While the petition references the petition fee, no fee was received. Any renewed petition must be accompanied by the required petition fee.

Further correspondence with respect to this matter should be addressed as follows:

By mail: **Mail Stop Petition**
Commissioner for Patents
P.O. Box 1450
Alexandria, VA 22313-1450

By facsimile: (571) 273-8300

By hand delivery: U.S. Patent and Trademark Office
Customer Window, **Mail Stop Petition**
Randolph Building
401 Dulany Street
Alexandria, VA 22314

Telephone inquiries concerning this matter may be directed to the undersigned at (571) 272-3205.

Alesia M. Brown
Petitions Attorney
Office of Petitions

UNITED STATES PATENT AND TRADEMARK OFFICE

COMMISSIONER FOR PATENTS
UNITED STATES PATENT AND TRADEMARK OFFICE
P.O. BOX 1450
ALEXANDRIA, VA 22313-1450
www.uspto.gov

COPY MAILED

SEP 17 2007

OFFICE OF PETITIONS

J C PATENTS, INC.
4 VENTURE, SUITE 250
IRVINE CA 92618

In re Application of	:	
Itakura, et al.	:	DECISION ON PETITION
Application No. 10/796,826	:	
Filed: March 9, 2004	:	
Atty. Dkt. No.: JCLA21100	:	

This decision is in response to the renewed petition under 37 CFR 1.137(b), filed June 28, 2007.

The petition is **GRANTED**.

This application became abandoned October 18, 2006 for failure to timely submit a proper reply to the non-final Office action mailed July 17, 2006. The non-final Office action set a three month shortened statutory period of time for reply. Notice of Abandonment was mailed February 5, 2007.

A grantable petition pursuant to 37 C.F.R. § 1.137(b) must be accompanied by: (1) the required reply to the outstanding Office action or notice, unless previously filed; (2) the petition fee as set forth in 37 C.F.R. § 1.17(m); (3) a statement that the entire delay in filing the required reply from the due date for the reply until the filing of a grantable petition pursuant to 37 C.F.R. § 1.137(b) was unintentional; and (4) any terminal disclaimer (and fee set forth in 37 C.F.R. § 1.20(d)) required pursuant to 37 C.F.R. § 1.137(c).

The instant petition has been reviewed and found in compliance with the provisions of 37 C.F.R. § 1.137(b). Accordingly, the failure to timely submit a proper reply to the non-final Office action is accepted as having been unintentionally delayed.

This application is being forwarded to Technology Center 3600 for further processing.

Telephone inquiries concerning this matter may be directed to the undersigned at (571) 272-3205.

Alesia M. Brown
Petitions Attorney
Office of Petitions

UNITED STATES PATENT AND TRADEMARK OFFICE

Commissioner for Patents
United States Patent and Trademark Office
P.O. Box 1450
Alexandria, VA 22313-1450
www.uspto.gov

PHILIP H. ALBERT
TOWNSEND AND TOWNSEND AND CREW, LLP
TWO EMBARCADERO CENTER
EIGHTH FLOOR
SAN FRANCISCO, CA 94111-3834

MAILED

MAY 28 2009

OFFICE OF PETITIONS

In re Application of	:	
Sarukkai et al.	:	DECISION ON PETITION
Application No. 10/796,829	:	TO WITHDRAW
Filed: March 8, 2004	:	FROM RECORD
Attorney Docket No. 08226/1203350-US1	:	

This is a decision on the Request to Withdraw as attorney or agent of record under 37 C.F.R. § 1.36(b), filed August 29, 2005.

The request is **NOT APPROVED** because it is moot.

A review of the file record indicates that on February 7, 2006 the power of attorney was revoked by the assignee of the patent application. Accordingly, the request to withdraw under 37 C.F.R. § 1.36(b) is moot.

All future communications from the Office will be directed to the below-listed address until otherwise notified by applicant.

Telephone inquires concerning this decision should be directed to the undersigned at 571-272- 7751. All other inquires concerning either the examination or status of the application should be directed to the Technology Center.

Joan Olszewski

Joan Olszewski
Petitions Examiner
Office of Petitions

cc: Yahoo! Inc.
c/o Darby & Darby P.C.
P.O. Box 770
Church Street Station
New York NY 10008-0770

UNITED STATES PATENT AND TRADEMARK OFFICE

Commissioner for Patents
United States Patent and Trademark Office
P.O. Box 1450
Alexandria, VA 22313-1450
www.uspto.gov

HOLLINGSWORTH & FUNK, LLC
8009 34TH AVE S.
SUITE 125
MINNEAPOLIS MN 55425

COPY MAILED
SEP 02 2008

In re Application of	:	
Haldeman	:	
Application No. 10/796,845	:	DECISION
Filed: 9 March, 2004	:	
Attorney Docket No. GUID.023C1	:	

This is a decision on the petition filed on 14 April, 2008, considered as a petition under 37 C.F.R. §1.181 (no fee) requesting withdrawal of the holding of abandonment in the above-identified application.

The petition under 37 C.F.R. §1.181 is **GRANTED**.

As to the Request to Withdraw
the Holding of Abandonment

A proper showing (for relief under 37 C.F.R. §1.181):

- (as to non-receipt) requires at the very minimum: a statement from practitioner stating that the Office action was not received by the practitioner; a statement from the practitioner attesting to the fact that a search of the file jacket and docket records for the application indicates that the Office action was not received with a copy of those docket records; and a brief statement of the calendaring process and a copy of the due-date (calendar) docket record(s) where the nonreceived Office action would have been scheduled for reply had it been received must be attached to and referenced in the practitioner's statement; alternatively,

- (for a showing of timely and proper reply) requires a statement from practitioner stating that the reply was timely submitted by the practitioner; and copies of all papers submitted as and/or in support of that reply, with/and a copy of the date-stamped receipt card, Office FAX receipt acknowledgement (not simply Petitioner's FAX transmittal), or EFS receipt acknowledgment from the Office, along with practitioner's attestation as to the correctness/completeness of his/her records.

The showing(s) must include that of the person(s) with first-hand knowledge and an acknowledgment by the Petitioner that he/she has reviewed that information in compliance with his/her duty of candor to the Office. Petitioner has failed to make the showings of search and non-discovery with the documentary presentations discussed herein (and set forth in the footnote, *infra*, and the showings as to docketing and calendaring, again with documentary support—all in support of the averment of nonreceipt.

Petitioner's attention always is drawn to the guidance in the Commentary at MPEP §711.03(c).[1]

---

[1] The Commentary at MPEP §711.03(c) provides in pertinent part:

*****

I. PETITION TO WITHDRAW HOLDING OF ABANDONMENT

A petition to revive an abandoned application (discussed below) should not be confused with a petition from an examiner's holding of abandonment. Where an applicant contends that the application is not in fact abandoned (e.g., there is disagreement as to the sufficiency of the reply, or as to controlling dates), a petition under 37 C.F.R. 1.181(a) requesting withdrawal of the holding of abandonment is the appropriate course of action, and such petition does not require a fee. Where there is no dispute as to whether an application is abandoned (e.g., the applicant's contentions merely involve the cause of abandonment), a petition under 37 C.F.R. 1.137 (accompanied by the appropriate petition fee) is necessary to revive the abandoned application.

Two additional procedures are available for reviving an application that has become abandoned due to a failure to reply to an Office Action: (1) a petition under 37 C.F.R. 1.137(a) based on unavoidable delay; and (2) a petition under 37 C.F.R. 1.137(b) based on unintentional delay.

A. Petition To Withdraw Holding of Abandonment Based on Failure To Receive Office Action

In *Delgar v. Schulyer*, 172 USPQ 513 (D.D.C. 1971), the court decided that the Office should mail a new Notice of Allowance in view of the evidence presented in support of the contention that the applicant's representative did not receive the original Notice of Allowance. Under the reasoning of *Delgar*, an allegation that an Office action was never received may be considered in a petition to withdraw the holding of abandonment. If adequately supported, the Office may grant the petition to withdraw the holding of abandonment and remail the Office action. That is, the reasoning of *Delgar* is applicable regardless of whether an application is held abandoned for failure to timely pay the issue fee (35 U.S.C. 151) or for failure to prosecute (35 U.S.C. 133).

To minimize costs and burdens to practitioners and the Office, the Office has modified the showing required to establish nonreceipt of an Office action. The showing required to establish nonreceipt of an Office communication must include a statement from the practitioner **>describing the system used for recording an Office action received at the correspondence address of record with the USPTO. The statement should establish that the docketing system is sufficiently reliable. It is expected that the record would include, but not be limited to, the application number, attorney docket number, the mail date of the Office action and the due date for the response.

Practitioner must state that the Office action was not received at the correspondence address of record, and that a search of the practitioner's record(s), including any file jacket or the equivalent, and the application contents, indicates that the Office action was not received. A copy of the record(s) used by the practitioner where the non-received Office action would have been entered had it been received is required.

A copy of the practitioner's record(s) required to show non-receipt of the Office action should include the master docket for the firm. That is, if a three month period for reply was set in the nonreceived Office action, a copy of the master docket report showing all replies docketed for a date three months from the mail date of the nonreceived Office action must be submitted as documentary proof of nonreceipt of the Office action. If no such master docket exists, the practitioner should so state and provide other evidence such as, but not limited to, the following: the application file jacket; incoming mail log; calendar; reminder system; or the individual docket record for the application in question.<

The showing outlined above may not be sufficient if there are circumstances that point to a conclusion that the Office action may have been lost after receipt rather than a conclusion that the Office action was lost in the mail (e.g., if the practitioner has a history of not receiving Office actions).

Evidence of nonreceipt of an Office communication or action (e.g., Notice of Abandonment or an advisory action) other than that action to which reply was required to avoid abandonment would not warrant withdrawal of the holding of abandonment. Abandonment takes place by operation of law for failure to reply to an Office action or timely pay the issue fee, not by operation of the mailing of a Notice of Abandonment. See *Lorenz v. Finkl*, 333 F.2d 885, 889-90, 142 USPQ 26, 29-30 (CCPA 1964); *Krahn v. Commissioner*, 15 USPQ2d 1823, 1824 (E.D. Va 1990); *In re Application of Fischer*, 6 USPQ2d 1573, 1574 (Comm'r Pat. 1988).

Petitioner seeks to provide the documentation in compliance with the Commentary at MPEP §711.03(c)(A) and/or (B) as it is set forth on the website (and included for reference herein).

BACKGROUND

The record reflects as follows:

In response to an Office action, Petitioner chose to submit on 10 October, 2006, a terminal disclaimer in a form other than that provided and authorized by the Office.

On 3 January, 2007, the Office mailed to Petitioner a Notice that the terminal disclaimer form was disapproved and gave Petitioner one month and not less than 30 days to reply, with reply due with no indication of available extension of time on or before 3 February, 2007.

B. Petition To Withdraw Holding of Abandonment Based on Evidence That a Reply Was Timely Mailed or Filed

37 C.F.R. 1.10(c) through 1.10(e) and 1.10(g) set forth procedures for petitioning the Director of the USPTO to accord a filing date to correspondence as of the date of deposit of the correspondence as "Express Mail." A petition to withdraw the holding of abandonment relying upon a timely reply placed in "Express Mail" must include an appropriate petition under 37 C.F.R. 1.10(c), (d), (e), or (g) (see MPEP § 513). When a paper is shown to have been mailed to the Office using the "Express Mail" procedures, the paper must be entered in PALM with the "Express Mail" date.

Similarly, applicants may establish that a reply was filed with a postcard receipt that properly identifies the reply and provides *prima facie* evidence that the reply was timely filed. See MPEP § 503. For example, if the application has been held abandoned for failure to file a reply to a first Office action, and applicant has a postcard receipt showing that an amendment was timely filed in response to the Office action, then the holding of abandonment should be withdrawn upon the filing of a petition to withdraw the holding of abandonment. When the reply is shown to have been timely filed based on a postcard receipt, the reply must be entered into PALM using the date of receipt of the reply as shown on the post card receipt.

Where a certificate of mailing under 37 C.F.R. 1.8, but not a postcard receipt, is relied upon in a petition to withdraw the holding of abandonment, see 37 C.F.R. 1.8(b) and MPEP § 512. As stated in 37 C.F.R. 1.8(b)(3) the statement that attests to the previous timely mailing or transmission of the correspondence must be on a personal knowledge basis, or to the satisfaction of the Director of the USPTO. If the statement attesting to the previous timely mailing is not made by the person who signed the Certificate of Mailing (i.e., there is no personal knowledge basis), then the statement attesting to the previous timely mailing should include evidence that supports the conclusion that the correspondence was actually mailed (e.g., copies of a mailing log establishing that correspondence was mailed for that application). When the correspondence is shown to have been timely filed based on a certificate of mailing, the correspondence is entered into PALM with the actual date of receipt (i.e., the date that the duplicate copy of the papers was filed with the statement under 37 C.F.R. 1.8).

37 C.F.R. 1.8(b) also permits applicant to notify the Office of a previous mailing or transmission of correspondence and submit a statement under 37 C.F.R. 1.8(b)(3) accompanied by a duplicate copy of the correspondence when a reasonable amount of time (e.g., more than one month) has elapsed from the time of mailing or transmitting of the correspondence. Applicant does not have to wait until the application becomes abandoned before notifying the Office of the previous mailing or transmission of the correspondence. Applicant should check the private Patent Application Information Retrieval (PAIR) system for the status of the correspondence before notifying the Office. See MPEP §512.

C. Treatment of Untimely Petition To Withdraw Holding of Abandonment

37 C.F.R. 1.181(f) provides that, *inter alia*, except as otherwise provided, any petition not filed within 2 months from the action complained of may be dismissed as untimely. Therefore, any petition (under 37 C.F.R. 1.181) to withdraw the holding of abandonment not filed within 2 months of the mail date of a notice of abandonment (the action complained of) may be dismissed as untimely. 37 C.F.R. 1.181(f).
Rather than dismiss an untimely petition to withdraw the holding of abandonment under 37 C.F.R. 1.181(f), the Office may require a terminal disclaimer as a condition of granting an untimely petition to withdraw the holding of abandonment.

*****

Petitioner failed to reply timely and properly to the 3 January, 2007, Office action (Notice).

The application went abandoned by operation of law after midnight 3 February, 2007.

The Office mailed the Notice of Abandonment on 17 March, 2008.

On 14 April, 2008, Petitioner filed the instant petition averring, *inter alia*, timely filing, but provided therewith no date-stamped receipt card, USPTO FAX-receipt acknowledgement, or electronic filing system (EFS) acknowledgement receipt). However, Petitioner provides a ocpy of the terminal disclaimer filed with evidence of a certificate of mailing on a companion transmittal with/on the paper (terminal disclaimer) submitted. In so doing, Petitioner appears to evidence compliance with the Commentary at MPEP §711.03(c)(A) and/or (B) as it is set forth on the website (and included for reference herein), to wit:

> Where a certificate of mailing under 37 C.F.R. 1.8, but not a postcard receipt, is relied upon in a petition to withdraw the holding of abandonment, see 37 C.F.R. 1.8(b) and MPEP § 512. As stated in 37 C.F.R. 1.8(b)(3) the statement that attests to the previous timely mailing or transmission of the correspondence must be on a personal knowledge basis, or to the satisfaction of the Director of the USPTO.

(Petitioner also avers that the Notice of Abandonment incorrectly set forth the mail date of the Office action in question as 30 January, 2007, rather than 3 January, 2007. The Office acknowledges that averment of typographical error, however, it is not controlling.)

Out of an abundance of caution, Petitioners always are reminded that the filing of a petition under 37 C.F.R. §1.181 does not toll any periods that may be running any action by the Office and a petition seeking relief under the regulation must be filed within two (2) months of the act complained of (*see*: 37 C.F.R. §1.181(f)), and that those registered to practice and all others who make representations before the Office are reminded to inquire into the underlying facts of representations made to the Office and support averments with the appropriate documentation– since all owe to the Office the continuing duty to disclose.[2]

The availability of applications and application papers online to applicants/practitioners who diligently associate their Customer Number with the respective application(s) now provides an applicant/practitioner on-demand information as to events/transactions in an application.

---

[2] See supplement of 17 June, 1999. The Patent and Trademark Office is relying on Petitioner's duty of candor and good faith and accepting a statement made by Petitioner. See Changes to Patent Practice and Procedure, 62 Fed. Reg. at 53160 and 53178, 1203 Off. Gaz. Pat. Office at 88 and 103 (responses to comments 64 and 109)(applicant obligated under 37 C.F.R. §10.18 to inquire into the underlying facts and circumstances when providing statements to the Patent and Trademark Office).

STATUTES, REGULATIONS

Congress has authorized the Commissioner to "revive an application if the delay is shown to the satisfaction of the Commissioner to have been "unavoidable." 35 U.S.C. §133 (1994).

Allegations as to the Request to Withdraw the Holding of Abandonment

The courts have determined the construct for properly supporting a petition seeking withdrawal of a holding of abandonment.[3] (*See*, also, the commentary at MPEP §711.03(c)(I)(A) and (B).) And the regulation requires that relief be sought within two (2) months of the act complained of.

Petitioner appears to have satisfied the showing required.

CONCLUSION

Accordingly, The petition under 37 C.F.R. §1.181 is **granted** and the 17 March, 2008, Notice of Abandonment is **vacated**.

The instant application is released to Technology Center/AU 3737 for further processing in due course.

Petitioner may find it beneficial to view Private PAIR within a fortnight of the instant decision to ensure that the revival has been acknowledged by the Technology Center/AU in response to this decision—and it is noted that all inquiries with regard to that change in status should be directed to the Technology Center/AU where that change of status must be effected.

[3] See: Delgar v. Schulyer, 172 USPQ 513 (D.D.C. 1971).

UNITED STATES PATENT AND TRADEMARK OFFICE

COMMISSIONER FOR PATENTS
UNITED STATES PATENT AND TRADEMARK OFFICE
P.O. BOX 1450
ALEXANDRIA, VA 22313-1450
WWW.USPTO.GOV

Paper No. None

TOWNSEND AND TOWNSEND AND CREW, LLP
TWO EMBARCADERO CENTER
EIGHTH FLOOR
SAN FRANCISCO CA 94111-3834

COPY MAILED

OCT 3 1 2007

OFFICE OF PETITIONS

In re Application of Keith G. Lurie et al. Application No. 10/796,875 Filed: March 8, 2004 Attorney Docket Number: 016354-005213US Title: VENTILATOR AND METHODS FOR TREATING HEAD TRAUMA AND LOW BLOOD CIRCULATION	DECISION ON PETITION UNDER 37 C.F.R. § 1.137(A)

This is a decision on the petition filed September 10, 2007, pursuant to 37 C.F.R. § 1.137(a)[1], to revive the above-identified application.

Background

The above-identified application became abandoned for failure to reply within the meaning of 37 CFR § 1.113 in a timely manner to the final Office action mailed April 21, 2006, which set a shortened statutory period for reply of three months. An after-final amendment was received on June 21, 2006, and an advisory action was mailed on October 11, 2006. A second after-final response (two terminal disclaimers) was submitted on October 19, 2006, along with a three-month extension of time, and a second

1 A grantable petition pursuant to 37 C.F.R. § 1.137(a) must be accompanied by:

(1) The reply required to the outstanding Office action or notice, unless previously filed;
(2) The petition fee as set forth in 37 C.F.R. § 1.17(l);
(3) A showing to the Commissioner that the entire delay in filing the required reply from the due date for the reply until the filing of a grantable petition was unavoidable;
(4) Any terminal disclaimer (and fee as set forth in 37 C.F.R. § 1.20(d)) required pursuant to paragraph (d) of this section.

advisory action was mailed on June 14, 2007. No further responses were received, and no additional extensions of time under the provisions of 37 CFR § 1.136(a) were available. Accordingly, the above-identified application became abandoned on October 22, 2006. A notice of abandonment was mailed on August 6, 2007.

A discussion follows.

The Applicable Standard

Nonawareness of a PTO rule will not constitute unavoidable delay[2]

The burden of showing the cause of the delay is on the person seeking to revive the application[3].

"[T]he question of whether an applicant's delay in prosecuting an application was unavoidable must be decided on a case-by-case basis, taking all of the facts and circumstances into account."[4]

The general question asked by the Office is: "Did petitioner act as a reasonable and prudent person in relation to his most important business?"[5]

A delay caused by an applicant's lack of knowledge or improper application of the patent statute, rules of practice, or the MPEP is not rendered "unavoidable" due to either the applicant's reliance upon oral advice from USPTO employees or the USPTO's failure to advise the applicant to take corrective action[6].

Decisions on reviving abandoned applications on the basis of "unavoidable" delay have adopted the reasonably prudent person standard in determining if the delay was unavoidable:

> The word 'unavoidable' . . . is applicable to ordinary human affairs, and requires no more or greater care or diligence than is generally used and observed by prudent and careful men in

---

2 See Smith v. Mossinghoff, 671 F.2d 533, 538, 213 U.S.P.Q. (BNA) 977 (Fed. Cir. 1982) (citing Potter v. Dann, 201 U.S.P.Q. (BNA) 574 (D.D.C. 1978) for the proposition that counsel's nonawareness of PTO rules does not constitute "unavoidable" delay)). Although court decisions have only addressed the issue of lack of knowledge of an attorney, there is no reason to expect a different result due to lack of knowledge on the part of a pro se (one who prosecutes on his own) applicant. It would be inequitable for a court to determine that a client who spends his hard earned money on an attorney who happens not to know a specific rule should be held to a higher standard than a pro se applicant who makes (or is forced to make) the decision to file the application without the assistance of counsel. See also Donnelley v. Dickinson, 123 Fsupp2d 456, 459.

3 Id.

4 See In re Sivertz, 227 USPQ 255, 256 (Comm'r Pat. 1985).

5 See In re Mattulah, 38 App. D.C. 497 (D.C. Cir. 1912).

6 See In re Sivertz, 227 USPQ 255, 256 (Comm'r Pat. 1985).

> relation to their most important business. It permits them in the exercise of this care to rely upon the ordinary and trustworthy agencies of mail and telegraph, worthy and reliable employees, and such other means and instrumentalities as are usually employed in such important business. If unexpectedly, or through the unforeseen fault or imperfection of these agencies and instrumentalities, there occurs a failure, it may properly be said to be unavoidable, all other conditions of promptness in its rectification being present[7].

A petition cannot be granted where a petitioner has failed to meet his or her burden of establishing that the delay was "unavoidable[8]."

The Office must rely on the actions or inactions of duly authorized and voluntarily chosen representatives of the applicant, and the applicant is bound by the consequences of those actions or inactions[9]. Specifically, petitioner's delay caused by the mistakes or negligence of his voluntarily chosen representative does not constitute unavoidable delay within the meaning of 35 U.S.C. § 133[10].

The actions of the attorney are imputed to the client, for when a petitioner voluntarily chooses an attorney to represent him, the petitioner cannot later distance himself from this attorney, so as to avoid the repercussions of the actions or inactions of this selected representative, for clients are bound by the acts of their lawyers/agents, and constructively possess "notice of all facts, notice of which can be charged upon the attorney[11]."

Courts hesitate to punish a client for its lawyer's gross negligence, especially when the lawyer affirmatively misled the client," but "if the client freely chooses counsel, it should be bound to counsel's actions[12]."

In addition, decisions on revival are made on a "case-by-case basis, taking all the facts and circumstances into account[13]."

A petition cannot be granted where a petitioner has failed to meet his or her burden of establishing that the delay was "unavoidable[14]."

---

7 In re Mattullath, 38 App. D.C. at (1912)(quoting Ex parte Pratt, 1887 Dec. Comm'r Pat. 31, 32-33 (1887)); see also Winkler v. Ladd, 221 F. Supp. 550, 552, 138 USPQ 666, 167-68 (D.D.C. 1963), aff'd, 143 USPQ 172 (D.C. Cir. 1963); Ex parte Henrich, 1913 Dec. Comm'r Pat. 139, 141 (1913).
8 Haines, 673 F. Supp. at 314, 316-17; 5 USPQ2d at 1131-32.
9 Link v. Wabash, 370 U.S. 626, 633-634 (1962).
10 Haines, 673 F.Supp. at 316-17, 5 U.S.P.Q.2d at 1131-32; Smith v. Diamond, 209 USPQ 1091 (D.D.C. 1981); Potter v. Dann, 201 USPQ 574 (D.D.C. 1978); Ex parte Murray, 1891 Dec. Comm'r Pat. 103, 131 (Comm'r Pat. 1891).
11 Link at 633-634.
12 Inryco, Inc. v. Metropolitan Engineering Co., Inc., 708 F.2d 1225, 1233 (7th Cir. 1983). See also, Wei v. State of Hawaii, 763 F.2d 370, 372 (9th Cir. 1985); LeBlanc v. I.N.S., 715 F.2d 685, 694 (1st Cir. 1983).
13 Smith v. Mossinghoff, 671 F.2d at 538; 213 USPQ at 982.
14 Haines, 673 F. Supp. at 314, 316-17; 5 USPQ2d at 1131-32.

The Relevant Law and Regulations

35 U.S.C. § 133: Time for prosecuting application.

Upon failure of the applicant to prosecute the application within six months after any action therein, of which notice has been given or mailed to the applicant, or within such shorter time, not less than thirty days, as fixed by the Director in such action, the application shall be regarded as abandoned by the parties thereto, unless it be shown to the satisfaction of the Director that such delay was unavoidable.

(Amended Nov. 29, 1999, Public Law 106-113, sec. 1000(a)(9), 113 Stat. 1501A-582 (S. 1948 sec. 4732(a)(10)(A)).)

37 C.F.R. § 1.2: Business to be transacted in writing.

All business with the Patent and Trademark Office should be transacted in writing. The personal attendance of applicants or their attorneys or agents at the Patent and Trademark Office is unnecessary. The action of the Patent and Trademark Office will be based exclusively on the written record in the Office. No attention will be paid to any alleged oral promise, stipulation, or understanding in relation to which there is disagreement or doubt.

37 C.F.R. § 1.113: Final rejection or action.

(a) On the second or any subsequent examination or consideration by the examiner the rejection or other action may be made final, whereupon applicant's, or for ex parte reexaminations filed under § 1.510, patent owner's reply is limited to appeal in the case of rejection of any claim (§ 41.31 of this title), or to amendment as specified in § 1.114 or § 1.116. Petition may be taken to the Director in the case of objections or requirements not involved in the rejection of any claim (§ 1.181). Reply to a final rejection or action must comply with § 1.114 or paragraph (c) of this section. For final actions in an inter partes reexamination filed under § 1.913, see § 1.953.

(b) In making such final rejection, the examiner shall repeat or state all grounds of rejection then considered applicable to the claims in the application, clearly stating the reasons in support thereof.

(c) Reply to a final rejection or action must include cancellation of, or appeal from the rejection of, each rejected claim. If any claim stands allowed, the reply to a final rejection or action must comply with any requirements or objections as to form.

[24 FR 10332, Dec. 22, 1959; 46 FR 29182, May 29, 1981; revised, 62 FR 53131, Oct. 10, 1997, effective Dec. 1, 1997; revised, 65 FR 14865, Mar. 20, 2000, effective May 29, 2000 (adopted as final, 65 FR 50092, Aug. 16, 2000); para. (a) revised, 65 FR 76756, Dec. 7, 2000, effective Feb. 5, 2001; para. (a) revised, 68 FR 14332, Mar. 25, 2003, effective May 1, 2003; para. (a) revised, 69 FR 49959, Aug. 12, 2004, effective Sept. 13, 2004]

37 C.F.R. § 1.116 Amendments and affidavits or other evidence after final action and prior to appeal.

(a) An amendment after final action must comply with § 1.114 or this section.

(b) After a final rejection or other final action (§ 1.113) in an application or in an ex parte reexamination filed under § 1.510, or an action closing prosecution (§ 1.949) in an inter partes reexamination filed under § 1.913, but before or on the same date of filing an appeal (§ 41.31 or § 41.61 of this title):

(1) An amendment may be made canceling claims or complying with any requirement of form expressly set forth in a previous Office action;

(2) An amendment presenting rejected claims in better form for consideration on appeal may be admitted; or

(3) An amendment touching the merits of the application or patent under reexamination may be admitted upon a showing of good and sufficient reasons why the amendment is necessary and was not earlier presented.

(c) The admission of, or refusal to admit, any amendment after a final rejection, a final action, an action closing prosecution, or any related proceedings will not operate to relieve the application or reexamination proceeding from its condition as subject to appeal or to save the application from abandonment under § 1.135, or the reexamination prosecution from termination under § 1.550(d) or § 1.957(b) or limitation of further prosecution under § 1.957(c).

(d)

(1) Notwithstanding the provisions of paragraph (b) of this section, no amendment other than canceling claims, where such cancellation does not affect the scope of any other pending claim in the proceeding, can be made in an inter partes reexamination proceeding after the right of appeal notice under § 1.953 except as provided in § 1.981 or as permitted by § 41.77(b)(1) of this title.

(2) Notwithstanding the provisions of paragraph (b) of this section, an amendment made after a final rejection or other final action (§ 1.113) in an ex parte reexamination filed under §1.510, or an action closing prosecution (§ 1.949) in an inter partes reexamination filed under § 1.913 may not cancel claims where such cancellation affects the scope of any other pending claim in the reexamination proceeding except as provided in § 1.981 or as permitted by § 41.77(b)(1) of this title.

(e) An affidavit or other evidence submitted after a final rejection or other final action (§ 1.113) in an application or in an ex parte reexamination filed under § 1.510, or an action closing prosecution (§ 1.949) in an inter partes reexamination filed under § 1.913 but before or on the same date of filing an appeal (§ 41.31 or § 41.61 of this title), may be admitted upon a showing of good and sufficient reasons why the affidavit or other evidence is necessary and was not earlier presented.

(f) Notwithstanding the provisions of paragraph (e) of this section, no affidavit or other evidence can be made in an inter partes reexamination proceeding after the right of appeal notice under § 1.953 except as provided in § 1.981 or as permitted by § 41.77 (b)(1) of this title.

(g) After decision on appeal, amendments, affidavits and other evidence can only be made as provided in §§ 1.198 and 1.981, or to carry into effect a recommendation under § 41.50(c) of this title.

[24 FR 10332, Dec. 22, 1959; 46 FR 29183, May 29, 1981; para. (a) revised, 62 FR 53131, Oct. 10, 1997, effective Dec. 1, 1997; revised, 65 FR 14865, Mar. 20, 2000, effective May 29, 2000 (adopted as final, 65 FR 50092, Aug. 16, 2000); paras. (b) and (d) revised, 65 FR 76756, Dec. 7, 2000, effective Feb. 5, 2001; revised, 69 FR 49959, Aug. 12, 2004, effective Sept. 13, 2004]

37 C.F.R. § 1.135: Abandonment for failure to reply within time period.

(a) If an applicant of a patent application fails to reply within the time period provided under § 1.134 and § 1.136, the application will become abandoned unless an Office action indicates otherwise.

(b) Prosecution of an application to save it from abandonment pursuant to paragraph (a) of this section must include such complete and proper reply as the condition of the application may require. The admission of, or refusal to admit, any amendment after final rejection or any amendment not responsive to the last action, or any related proceedings, will not operate to save the application from abandonment.

(c) When reply by the applicant is a bona fide attempt to advance the application to final action, and is substantially a complete reply to the non-final Office action, but consideration of some matter or compliance with some requirement has been inadvertently omitted, applicant may be given a new time period for reply under § 1.134 to supply the omission.

[Paras. (a), (b), and (c), 47 FR 41276, Sept. 17, 1982, effective Oct. 1, 1982; para. (d) deleted, 49 FR 555, Jan. 4, 1984, effective Apr. 1, 1984; revised, 62 FR 53131, Oct. 10, 1997, effective Dec. 1, 1997]

Analysis

Petitioner received a final Office action, which rejected claim 17 under 35 U.S.C. § 112, claims 1, 3, 4, 7 through 17, and 20 under the judicially created doctrine of obviousness-type double patenting, and claims 1-24 under 35 U.S.C. § 103(a).

It is clear from rules 37 C.F.R. §§ 1.116 and 1.135 that abandonment of an application is risked when the applicant proffers an amendment after the mailing of a final Office action. The rule clearly indicates that the mere filing of an

amendment does not relieve applicant of the duty to take appropriate action to save the application from abandonment.

If steps are not taken after final to maintain pendency prior to the expiration of the maximum extendable period for reply, the application will go abandoned. Put another way, the submission of an after final amendment which fails to place the application in condition for allowance will result in the abandonment of the application, unless one of the following four items is filed prior to the maximum extendable period for reply:

- a subsequent amendment which places the application in condition for allowance:
- a Notice of Appeal:
- a Request for a Continuation Application pursuant to 37 C.F.R. § 1.53(b), if applicable:
- a Request for Continued Examination pursuant to 37 C.F.R. § 1.114, and;
- a Terminal Disclaimer, if applicable.

In response to this final rejection, Petitioner submitted an after-final amendment on June 21, 2006, and an advisory action was mailed on October 11, 2006, indicating

> the applicant has not provided a terminal disclaimer as stated in the remarks section of the after final amendment.

On October 19, 2006, Applicant submitted a terminal disclaimer, a three-month extension of time, and a one-page letter entitled "COMMUNICATION."

A second advisory action was mailed on June 14, 2007.

With the present petition, Petitioner has asserted that he did not believe that any action needed to be taken after receiving the first advisory action, other than the submission of two terminal disclaimers, due to a telephone conversation he purportedly had with the Examiner. Petitioner asserted that on October 19, 2006, he was informed over the phone that

> if the Terminal Disclaimers were submitted before October 21, 2006, that the application would not go abandoned and that Applicant would not need to file an RCE.

As such, it appears that Petitioner relied on this purported oral understanding.

37 C.F.R. §1.2 sets forth, *in toto*:

> All business with the Patent and Trademark Office should be transacted in writing. The personal attendance of applicants or their attorneys or agents at the Patent and Trademark Office is

> unnecessary. The action of the Patent and Trademark Office will be based exclusively on the written record in the Office. No attention will be paid to any alleged oral promise, stipulation, or understanding in relation to which there is disagreement or doubt.

Petitioner was in possession of a Final Rejection that set forth a plurality of rejections. The first advisory action, mailed in response to the after-final amendment, has been reviewed by the undersigned, and it does not appear to indicate that any of the previously made rejections had been overcome by said amendment. However, Petitioner appears to have discounted the majority of the rejections contained in the Final Rejection, based on an alleged oral understanding he had with the Examiner.

Pursuant to Rule § 1.2, Petitioner cannot rely on an oral assurance that was allegedly made by the Examiner, and this petition must be **DISMISSED.**

CONCLUSION

Any reply must be submitted within **TWO MONTHS** from the mail date of this decision. Extensions of time under 37 C.F.R. § 1.136(a) are permitted. The reply should include a cover letter entitled "Renewed Petition Under 37 C.F.R. § 1.137(a)". This is not a final agency action within the meaning of 5 U.S.C § 704.

NOTICE:

Thereafter, there will be no further reconsideration of this matter[15, 16].

Petitioner may wish to strongly consider filing a petition under 37 C.F.R. §1.137(b). Petitioner's only relief is a petition

---

15 For more than a century, punctuality and due diligence, equally with good faith, have been deemed essential requisites to the success of those who seek to obtain the special privileges of the patent law, and they are demanded in the interest of the public and for the protection of rival inventors. See: Porter v. Louden, 7 App.D.C. 64 (C.A.D.C. 1895), citing Wollensak v. Sargent, 151 U.S. 221, 228, 38 L. Ed. 137, 14 S. Ct. 291 (1894). An invention benefits no one unless it is made public, and the rule of diligence should be so applied as to encourage reasonable promptness in conferring this benefit upon the public. Automatic Electric Co. v. Dyson, 52 App. D.C. 82; 281 F. 586 (C.A.D.C. 1922). Generally, 35 U.S.C. §6; 37 C.F.R.§§1.181, 182, 183.

16 If, on renewed petition, Petitioner fails to satisfy the showings burden required: (a) the resulting decision may be one viewed as final agency action; and (b) provisions for reconsideration, such as those at 37 C.F.R. § 1.137(e), will **not** apply to that decision.

under 37 C.F.R. §1.137(b), and - having been made aware of this reality - any delay in promptly seeking relief under 37 C.F.R. § 1.137(b) may be considered evidence of intentional delay and an absolute bar to revival.

Any response to this decision should indicate in a prominent manner that the attorney handling this matter is Paul Shanoski, and may be submitted by mail[17], hand-delivery[18], or facsimile[19]. Registered users of EFS-Web may alternatively submit a response to this decision via EFS-Web[20].

If responding by mail, Petitioner is advised not to place the undersigned's name on the envelope. Only the information that appears in the footnote should be included - adding anything else to the address will delay the delivery of the response to the undersigned.

Telephone inquiries regarding *this decision* should be directed to the undersigned at (571) 272-3225[21]. All other inquiries concerning examination procedures or status of the application should be directed to the Technology Center.

It is noted that the address listed on the petition differs from the address of record. The application file does not indicate a change of correspondence address has been filed in this case, although the address given on the petition differs from the address of record. If Petitioner desires to receive future correspondence regarding this application, the change of correspondence address must be submitted. A courtesy copy of this decision will be mailed to Petitioner. However, all future correspondence will be directed to the address of record until such time as appropriate instructions are received to the contrary. Petitioner will not receive future correspondence related to this application unless Change of Correspondence Address, Patent Form (PTO/SB/122) is submitted for the above-identified application. For Petitioner's convenience, a blank

---

17 Mail Stop Petition, Commissioner for Patents, United States Patent and Trademark Office, P.O. Box 1450, Alexandria, VA, 22313-1450.
18 Customer Window, Randolph Building, 401 Dulaney Street, Alexandria, VA, 22314.
19 (571) 273-8300- please note this is a central facsimile number.
20 https://sportal.uspto.gov/authenticate/authenticateuserlocalepf.html
21 Petitioner will note that all practice before the Office should be in writing, and the action of the Office will be based exclusively on the written record in the Office. See 37 C.F.R. § 1.2. As such, Petitioner is reminded that no telephone discussion may be controlling or considered authority for any further action(s) of Petitioner.

Change of Correspondence Address, Patent Form (PTO/SB/122), may be found at http://www.uspto.gov/web/forms/sb0122.pdf.

Paul Shanoski
Senior Attorney
Office of Petitions
United States Patent and Trademark Office

cc: Darin J. Gibby
1200 17th Street, Suite 2700
Denver, Colorado 80202

UNITED STATES PATENT AND TRADEMARK OFFICE

COMMISSIONER FOR PATENTS
UNITED STATES PATENT AND TRADEMARK OFFICE
P.O. BOX 1450
ALEXANDRIA, VA 22313-1450
WWW.USPTO.GOV

Paper No.

TOWNSEND AND TOWNSEND AND CREW, LLP
TWO EMBARCADERO CENTER
EIGHTH FLOOR
SAN FRANCISCO CA 94111-3834

COPY MAILED

SEP 15 2008

OFFICE OF PETITIONS

In re Application of Keith G. Lurie et al. Application No. 10/796,875 Filed: March 8, 2004 Attorney Docket Number: 016354-005213US Title: VENTILATOR AND METHODS FOR TREATING HEAD TRAUMA AND LOW BLOOD CIRCULATION	:	DECISION ON PETITION PURSUANT TO 37 C.F.R. § 1.137(B)

This is a decision on the petition filed November 12, 2007, pursuant to 37 C.F.R. § 1.137(b), to revive the above-identified application.

This petition is **DISMISSED**.

BACKGROUND AND PROCEDURAL HISTORY

The above-identified application became abandoned for failure to reply within the meaning of 37 CFR § 1.113 in a timely manner to the final Office action mailed April 21, 2006, which set a shortened statutory period for reply of three months. An after-final amendment was received on June 21, 2006, and an advisory action was mailed on October 11, 2006. A second after-final response (two terminal disclaimers) was submitted on October 19, 2006, along with a three-month extension of time, and a second advisory action was mailed on June 14, 2007. No further responses were received, and no additional extensions of time

under the provisions of 37 CFR § 1.136(a) were available. Accordingly, the above-identified application became abandoned on October 22, 2006. A notice of abandonment was mailed on August 6, 2007.

A petition pursuant to 37 C.F.R. § 1.137(a) was filed on September 10, 2007, and was dismissed in a decision mailed on October 31, 2007.

A grantable petition pursuant to 37 C.F.R. § 1.137(b) must be accompanied by:

(1) The reply required to the outstanding Office action or notice, unless previously filed;
(2) The petition fee as set forth in 37 C.F.R. § 1.17(m);
(3) A statement that the entire delay in filing the required reply from the due date for the reply until the filing of a grantable petition pursuant to this paragraph was unintentional. The Commissioner may require additional information where there is a question whether the delay was unintentional, and;
(4) Any terminal disclaimer (and fee as set forth in 37 C.F.R. § 1.20(d)) required pursuant to paragraph (d) of this section.

ANALYSIS

37 C.F.R. § 1.137(b)(3) requires a statement that the entire delay in filing the required reply from the due date for the reply until the filing of a grantable petition pursuant to 37 C.F.R. § 1.137(b) was unintentional. Since the statement contained in this petition varies from the language required by 37 C.F.R. § 1.137(b)(3), the statement contained in this petition is being construed as the statement required by 37 C.F.R. § 1.137(b)(3) and Petitioner must notify the Office if this is not a correct interpretation of the statement contained in this petition.

With this petition, Petitioner has included the petition fee and a statement that is being construed as the proper statement of unintentional delay. Requirements (2) and (3) of Rule 1.137(b) have been met. The fourth requirement of Rule 1.137(b) is not applicable, as a terminal disclaimer is not required.

Regarding the first requirement or Rule 1.137(b), the requirement has not been satisfied because Petitioner did not submit the required reply to the Office action. The required reply is the reply sufficient to have avoided abandonment, had such reply been timely filed.[1] In order for the application to be revived, petitioner must submit a reply which satisfies 37 C.F.R. § 1.137(b)(1) (i.e., a Notice of Appeal (and fee required by law); an amendment that *prima facie* places the application in condition for allowance; a continuing application under 37 C.F.R. §1.53(b); a request for continuing examination under 37 C.F.R. §1.114, if applicable; or a 37 C.F.R. §1.129(a) submission, if applicable). **The petition was not accompanied by any of these replies.**

CONCLUSION

Any reply must be submitted within **TWO MONTHS** from the mail date of this decision. Extensions of time under 37 C.F.R. § 1.136(a) are permitted. The reply should include a cover letter entitled "Renewed Petition pursuant to 37 C.F.R. § 1.137(b)". This is not a final agency action within the meaning of 5 U.S.C § 704.

Any response to this decision should indicate in a prominent manner that the attorney handling this matter is Paul Shanoski, and may be submitted by mail,[2] hand-delivery,[3] or facsimile.[4] Registered users of EFS-Web may alternatively submit a response to this decision via EFS-Web.[5]

If responding by mail, Petitioner is advised not to place the undersigned's name on the envelope. Only the information that appears in the footnote should be included - adding anything else to the address will delay the delivery of the response to the undersigned.

Telephone inquiries regarding *this decision* should be directed to the undersigned at (571) 272-3225.[6] All other inquiries

1 See MPEP § 711.03(c).

2 Mail Stop Petition, Commissioner for Patents, United States Patent and Trademark Office, P.O. Box 1450, Alexandria, VA, 22313-1450.
3 Customer Window, Randolph Building, 401 Dulaney Street, Alexandria, VA, 22314.
4 (571) 273-8300- please note this is a central facsimile number.
5 https://sportal.uspto.gov/authenticate/authenticateuserlocalepf.html
6 Petitioner will note that all practice before the Office should be in writing, and the action of the Office will be based exclusively on the written record in the Office. See 37 C.F.R. § 1.2. As such, Petitioner is reminded that no telephone discussion may be controlling or considered authority for any further action(s) of Petitioner.

concerning examination procedures should be directed to the Technology Center.

/Paul Shanoski/
Paul Shanoski
Senior Attorney
Office of Petitions

UNITED STATES PATENT AND TRADEMARK OFFICE

COMMISSIONER FOR PATENTS
UNITED STATES PATENT AND TRADEMARK OFFICE
P.O. BOX 1450
ALEXANDRIA, VA 22313-1450
WWW.USPTO.GOV

COPY MAILED

Paper No.

JUN 15 2009

OFFICE OF PETITIONS

TOWNSEND AND TOWNSEND AND CREW, LLP
TWO EMBARCADERO CENTER
EIGHTH FLOOR
SAN FRANCISCO CA 94111-3834

In re Application of Keith G. Lurie et al. Application No. 10/796,875 Filed: March 8, 2004 Attorney Docket Number: 016354-005213US Title: VENTILATOR AND METHODS FOR TREATING HEAD TRAUMA AND LOW BLOOD CIRCULATION	DECISION ON RENEWED PETITION PURSUANT TO 37 C.F.R. § 1.137(B)

This is a decision on the renewed petition pursuant to 37 C.F.R. § 1.137(b), filed on October 1, 2008, to revive the above-identified application.

This renewed petition pursuant to 37 C.F.R. § 1.137(b) is **GRANTED**.

The above-identified application became abandoned for failure to reply within the meaning of 37 CFR § 1.113 in a timely manner to the final Office action mailed April 21, 2006, which set a shortened statutory period for reply of three months. An after-final amendment was received on June 21, 2006, and an advisory action was mailed on October 11, 2006. A second after-final response (two terminal disclaimers) was submitted on October 19, 2006, along with a three-month extension of time, and a second advisory action was mailed on June 14, 2007. No further responses were received, and no additional extensions of time under the provisions of 37 CFR § 1.136(a) were available. Accordingly, the above-identified application became abandoned on

October 22, 2006. A notice of abandonment was mailed on August 6, 2007.

A petition pursuant to 37 C.F.R. § 1.137(a) was filed on September 10, 2007, and was dismissed in a decision mailed on October 31, 2007.

An original petition pursuant to 37 C.F.R. § 1.137(b) was filed on November 12, 2007, and was dismissed in a decision mailed on September 15, 2008.

A grantable petition pursuant to 37 C.F.R. § 1.137(b) must be accompanied by:

(1) The reply required to the outstanding Office action or notice, unless previously filed;
(2) The petition fee as set forth in 37 C.F.R. § 1.17(m);
(3) A statement that the entire delay in filing the required reply from the due date for the reply until the filing of a grantable petition pursuant to this paragraph was unintentional. The Commissioner may require additional information where there is a question whether the delay was unintentional, and;
(4) Any terminal disclaimer (and fee as set forth in 37 C.F.R. § 1.20(d)) required pursuant to paragraph (d) of this section.

The petition fee was received on November 12, 2007.

With this renewed petition, Petitioner submitted the proper statement of unintentional delay. Petitioner further submitted a Request for Continued Examination (RCE) under 37 C.F.R. § 1.114, including a request for consideration of a concurrently submitted amendment and a terminal disclaimer, and payment of the RCE fee. The RCE has been accepted as the required reply under 37 C.F.R. § 1.137(b)(1).

As such, the first three requirements of Rule 1.137(b) have been met. The fourth requirement of Rule 1.137(b) is not applicable, as a terminal disclaimer is not required.[1]

The Technology Center will be notified of this decision. The Technology Center's support staff will notify the Examiner of this decision, so that the submission under 37 C.F.R. § 1.114 -

1 See Rule 1.137(d).

the amendment and the terminal disclaimer that were concurrently submitted on October 1, 2008 - can be processed.

Petitioner may find it beneficial to view Private PAIR within a fortnight of the present decision to ensure that the revival has been acknowledged by the Technology Center in response to this decision. It is noted that all inquiries with regard to any failure of that change in status should be directed to the Technology Center where that change of status must be effected - **the Office of Petitions cannot effectuate a change of status.**

Telephone inquiries regarding *this decision* should be directed to the undersigned at (571) 272-3225.[2] All other inquiries concerning examination procedures or status of the application should be directed to the Technology Center.

Paul Shanoski
Senior Attorney
Office of Petitions

2 Petitioner will note that all practice before the Office should be in writing, and the action of the Office will be based exclusively on the written record in the Office. See 37 C.F.R. § 1.2. As such, Petitioner is reminded that no telephone discussion may be controlling or considered authority for Petitioner's further action(s).

UNITED STATES PATENT AND TRADEMARK OFFICE

Commissioner for Patents
United States Patent and Trademark Office
P.O. Box 1450
Alexandria, VA 22313-1450
www.uspto.gov

Orum & Roth LLC
53 W. Jackson Boulevard
Chicago IL 60604-3606

COPY MAILED
OCT 13 2006
OFFICE OF PETITIONS

In re Application of	:	
WESOLEK	:	
Application No. 10/796,876	:	DECISION ON PETITION
Filed: March 08, 2004	:	TO WITHDRAW
Attorney Docket No. 13721	:	FROM RECORD
	:	

This is a decision on the Request to Withdraw as attorney or agent of record under 37 C.F.R. § 1.36(b), filed July 16, 2006.

The request is **APPROVED**.

A grantable request to withdraw as attorney/agent of record must be signed by every attorney/agent seeking to withdraw or contain a clear indication that one attorney is signing on behalf of another/others. A request to withdraw will not be approved unless at least 30 (thirty) days would remain between the date of approval and the later of the expiration date of a time to file a response or the expiration date of the maximum time period which can be extended under 37 C.F.R. § 1.136(a).

The request was signed by Catherine L. Gemrich.

Catherine L. Gemrich has been withdrawn as attorney or agent of record; all other attorneys remain of record.

The correspondence address of record remains unchanged.

A Review of the file discloses that a non-final Office action was mailed on April 05, 2006, which set forth a three month shortened statutory period for reply. Extensions of time under 37 CFR 1.136(a) were available. To date, there is no indication that a reply to the Office action of April 05, 2006 has been received.

Telephone inquiries concerning this decision should be directed to Patricia Volpe at 571-272-6825.

David Bucci
Petitions Examiner
Office of Petitions

UNITED STATES PATENT AND TRADEMARK OFFICE

Commissioner for Patents
United States Patent and Trademark Office
P.O. Box 1450
Alexandria, VA 22313-1450
www.uspto.gov

MICROSOFT CORPORATION
C/O LYON & HARR, LLP
300 ESPLANADE DRIVE
SUITE 800
OXNARD CA 93036

COPY MAILED

APR 0 9 2009

OFFICE OF PETITIONS

In re Application of Yuan et al. Application No. 10/796,879 Filed: March 9, 2004 Attorney Docket No. MCS-084A-03 (306713.01)	: : : : :	ON PETITION

This is a decision on the petition under 37 C.F.R. § 1.137(b), filed January 7, 2009, to revive the above-identified application.

The petition is **GRANTED**.

The petition satisfies the requirements of 37 CFR 1.137(b) in that petitioner has supplied (1) the reply in the form of the Issue Fee Transmittal with payment of the issue and publication fees (previously submitted on November 26, 2008), (2) the petition fee, and (3) a proper statement of unintentional delay.

Telephone inquiries concerning this decision should be directed to the undersigned at (571) 272-3206.

This matter is being referred to the Office of Data Management for processing into a patent.

Liana Walsh
Petitions Examiner
Office of Petitions

UNITED STATES PATENT AND TRADEMARK OFFICE

COMMISSIONER FOR PATENTS
UNITED STATES PATENT AND TRADEMARK OFFICE
WASHINGTON, DC 20231
www.uspto.gov

MICROSOFT CORPORATION
c/o LYON & HARR, LLP
300 ESPLANADE DRIVE
SUITE 800
OXNARD, CA 93036

MAIL

MAY 01 2008

DIRECTOR'S OFFICE
TECHNOLOGY CENTER 2600

In re Application of	:	
Po Yuan *et al.*	:	
Serial No.: 10/796,880	:	DECISION ON PETITION
Filed: March 9, 2004	:	*ACCEPTANCE OF COLOR DRAWINGS*
For: SYSTEM AND PROCESS FOR AUTOMATIC	:	
EXPOSURE CORRECTION IN AN IMAGE	:	

This is a decision on the petition under 37 CFR §1.84(a)(2) filed March 9, 2004 requesting acceptance of color drawings.

The petition requests that the color drawings identified in Figures 2(a), 2(b), 4(a) and 4(b) be accepted in lieu of black and white drawings.

A grantable petition under 37 C.F.R. §1.84(a)(2) must be accompanied by a fee set forth under 37 C.F.R. § 1.17(h); 3 (three) sets of the color drawings in question, and the specification must contain, or be amended to contain, the following language as the first paragraph in that portion of the specification relating to the brief description of the drawings:

"The file of this patent contains at least one drawing executed in color. Copies of this patent with color drawing(s) will be provided by the Patent and Trademark Office upon request and payment of the necessary fee."

The petition is **GRANTED**.

Krista Zele
Quality Assurance Specialist
Technology Center 2600
Communications

UNITED STATES PATENT AND TRADEMARK OFFICE

Commissioner for Patents
United States Patent and Trademark Office
P.O. Box 1450
Alexandria, VA 22313-1450
www.uspto.gov

OCT 26 2004

YOUNG & THOMPSON
745 SOUTH 23RD STREET
2ND FLOOR
ARLINGTON VA 22202

In re Application of	:
Gabriele Breviglieri et al	:
Serial No.: 10/796,886	: PETITION TO MAKE SPECIAL
Filed: February 3, 2004	:
Attorney Docket No.: 2503-1078	:

This is in response to applicants' petition filed September 8, 2004, to make the above-identified application special under the provisions of 37 CFR 1.102(d).

Applicant has satisfied the provisions set forth in M.P.E.P. 708.02, VIII. Therefor the petition is **GRANTED**.

The following condition applies to the grant of this petition: If, upon examination, it is determined that a restriction requirement is necessary because of multiple inventions being claimed, applicant will be required to make an election without traverse of a single invention to be prosecuted. Failure to make an election without traverse will void the special status accorded in this decision.

The application will be forwarded the examiner for action on the merits commensurate with this decision.

Should there be any questions with regard to this letter please contact William R. Dixon, Jr. by letter addressed to the Director, Technology Center 1600, P.O. Box 1450, Alexandria, VA 22313-1450, or by telephone at 571-272-0519 or by facsimile transmission at the general Office facsimile number, (703) 872-9306.

William R. Dixon, Jr.
Special Program Examiner
Technology Center 1600

UNITED STATES PATENT AND TRADEMARK OFFICE

Commissioner for Patents
United States Patent and Trademark Office
P.O. Box 1450
Alexandria, VA 22313-1450
www.uspto.gov

MAR 16 2007

OSTROLENK FABER GERB & SOFFEN
1180 AVENUE OF THE AMERICAS
NEW YORK NY 10036-8403

In re Application of	:
Han-Chung Wu et al	:
Serial No.: 10/796,892	: PETITION DECISION
Filed: March 9, 2004	:
Attorney Docket No.: P/741-177	:

This is a decision on the PETITION FOR ACCEPTANCE OF COLOR DRAWINGS UNDER 37 CFR 1.84(a)(2). The petition was filed August 29, 2006. Entry of color drawings requires: 1) three sets of the color drawings, 2) a proper amendment to the specification indicating color photographs or drawings are present in the file, and 3) the required fee under 37 CFR 1.17(h).

A review of the application record indicates that the petition meets all of the requirements for acceptance of color drawings. This is not to be construed that all of the drawings are accepted, only that the color drawings are acceptable.

The petition is **GRANTED**.

Should there be any questions with respect to this decision, please contact William R. Dixon, Jr., by mail addressed to: Director, Technology Center 1600, at the address listed above, or by telephone at 571-272-0519 or by facsimile transmission at 571-273-8300.

William R. Dixon, Jr.
Special Program Examiner
Technology Center 1600

UNITED STATES PATENT AND TRADEMARK OFFICE

Commissioner for Patents
United States Patent and Trademark Office
P.O. Box 1450
Alexandria, VA 22313-1450
www.uspto.gov

MILES & STOCKBRIDGE PC
1751 PINNACLE DRIVE
SUITE 500
MCLEAN VA 22102-3833

COPY MAILED
JUN 23 2008

In re Application of	:
BRUGGER et al.	:
Application No. 10/796,899	: DECISION ON PETITION
Filed: March 8, 2004	: UNDER 37 CFR 1.78(a)(3)
Attorney Docket No. 53951-121	:

This is a decision on the petition under 37 CFR 1.78(a)(3), filed January 4, 2008, to accept an unintentionally delayed claim under 35 U.S.C. § 120 for the benefit of priority to the prior-filed non-provisional applications set forth in the amendment filed with the petition.

The petition is **DISMISSED**.

A petition for acceptance of a claim for late priority under 37 CFR 1.78(a)(3) is only applicable to those applications filed on or after November 29, 2000. Further, the petition is appropriate only after the expiration of the period specified in 37 CFR 1.78(a)(2)(ii). In addition, the petition under 37 CFR 1.78(a)(3) must be accompanied by:

(1) the reference required by 35 U.S.C. § 120 and 37 CFR 1.78(a)(2)(i) of the prior-filed application, unless previously submitted;
(2) the surcharge set forth in § 1.17(t); and
(3) a statement that the entire delay between the date the claim was due under 37 CFR 1.78(a)(2)(ii) and the date the claim was filed was unintentional. The Director may require additional information where there is a question whether the delay was unintentional.

The petition does not satisfy item (1) above.

The reference to add the above-noted, prior-filed applications in the first sentence of the specification on page one following the title is not acceptable as drafted since it improperly incorporates by reference the prior-filed applications. An incorporation by reference statement added after an application's filing date is not effective because no new matter can be added to an

application after its filing date (*see* 35 U.S.C. § 132(a)). If an incorporation by reference statement is included in an amendment to the specification to add a benefit claim under 35 U.S.C. § 120 after the filing date of the application, the amendment would not be proper. When a benefit claim under 35 U.S.C. § 120 is submitted after the filing of an application, the reference to the prior application cannot include an incorporation by reference statement of the prior application. *See* Dart Industries v. Banner, 636 F.2d 684, 207 USPQ 273 (C.A.D.C. 1980). *Note* MPEP §§ 201.06(c) and 608.04(b).

If reconsideration of this decision is desired, a renewed petition under 37 CFR § 1.78(a)(3) and an Application Data Sheet or an amendment (complying with the provisions of 37 CFR 1.121 and 37 CFR 1.76(b)(5)) to correct the above matters are required.

Further correspondence with respect to this matter should be addressed as follows:

By mail: Mail Stop PETITIONS
Commissioner for Patents
Post Office Box 1450
Alexandria, VA 22313-1450

By hand: Customer Service Window
Mail Stop Petitions
Randolph Building
401 Dulany Street
Alexandria, VA 22314

By fax: (571) 273-8300
ATTN: Office of Petitions

Any questions concerning this matter may be directed to Ramesh Krishnamurthy at (571) 272 - 4914.

David Bucci
Petitions Examiner
Office of Petitions

UNITED STATES PATENT AND TRADEMARK OFFICE

Commissioner for Patents
United States Patent and Trademark Office
P.O. Box 1450
Alexandria, VA 22313-1450
www.uspto.gov

MILES & STOCKBRIDGE PC
1751 PINNACLE DRIVE
SUITE 500
MCLEAN VA 22102-3833

COPY MAILED
SEP 05 2008

In re Application of	:
BRUGGER et al.	:
Application No. 10/796,899	: DECISION ON PETITION
Filed: March 8, 2004	: UNDER 37 CFR 1.78(a)(3)
Attorney Docket No. T4342-14198US21	:

This is a decision on the renewed petition under 37 CFR 1.78(a)(3), filed July 16, 2008, to accept an unintentionally delayed claim under 35 U.S.C. § 120 for the benefit of priority to the prior-filed non-provisional applications set forth in the amendment filed with the petition.

The petition is **GRANTED**.

A petition for acceptance of a claim for late priority under 37 CFR 1.78(a)(3) is only applicable to those applications filed on or after November 29, 2000. Further, the petition is appropriate only after the expiration of the period specified in 37 CFR 1.78(a)(2)(ii). In addition, the petition under 37 CFR 1.78(a)(3) must be accompanied by:

(1) the reference required by 35 U.S.C. § 120 and 37 CFR 1.78(a)(2)(i) of the prior-filed application, unless previously submitted;
(2) the surcharge set forth in § 1.17(t); and
(3) a statement that the entire delay between the date the claim was due under 37 CFR 1.78(a)(2)(ii) and the date the claim was filed was unintentional. The Director may require additional information where there is a question whether the delay was unintentional.

All of the above requirements having been satisfied, the late claim for priority under 35 U.S.C. § 120 is accepted as being unintentionally delayed.

The granting of the petition to accept the delayed benefit claim to the prior-filed applications under 37 CFR 1.78(a)(3) should not be construed as meaning that this application is entitled

to the benefit of the prior-filed applications. In order for this application to be entitled to the benefit of the prior-filed applications, all other requirements under 35 U.S.C. § 120 and 37 CFR 1.78(a)(1) and (a)(2) must be met. Similarly, the fact that the corrected Filing Receipt accompanying this decision on petition includes the prior-filed applications should not be construed as meaning that applicant is entitled to the claim for benefit of priority to the prior-filed applications noted thereon. Accordingly, the examiner will, in due course, consider this benefit claim and determine whether the application is entitled to the benefit of the earlier filing date.

A corrected Filing Receipt, which includes the priority claim to the prior-filed nonprovisional applications, accompanies this decision on petition.

Any inquiries concerning this decision may be directed to Ramesh Krishnamurthy at (571) 272-4914. All other inquiries concerning either the examination procedures or status of the application should be directed to the Technology Center.

This application is being forwarded to Technology Center Art Unit 3772 for consideration by the examiner of applicant's entitlement to claim benefit of priority under 35 U.S.C. § 120 to the prior-filed applications.

David Bucci
Petitions Examiner
Office of Petitions

UNITED STATES PATENT AND TRADEMARK OFFICE

UNITED STATES DEPARTMENT OF COMMERCE
United States Patent and Trademark Office
Address: COMMISSIONER FOR PATENTS
P.O. Box 1450
Alexandria, Virginia 22313-1450
www.uspto.gov

APPLICATION NUMBER	FILING or 371(c) DATE	GRP ART UNIT	FIL FEE REC'D	ATTY.DOCKET.NO	TOT CLAIMS	IND CLAIMS
10/796,899	03/08/2004	3772	450	T4342-14198US21	12	3

CONFIRMATION NO. 1653

CORRECTED FILING RECEIPT

181
MILES & STOCKBRIDGE PC
1751 PINNACLE DRIVE
SUITE 500
MCLEAN, VA 22102-3833

OC000000031887344

Date Mailed: 09/04/2008

Receipt is acknowledged of this non-provisional patent application. The application will be taken up for examination in due course. Applicant will be notified as to the results of the examination. Any correspondence concerning the application must include the following identification information: the U.S. APPLICATION NUMBER, FILING DATE, NAME OF APPLICANT, and TITLE OF INVENTION. Fees transmitted by check or draft are subject to collection. Please verify the accuracy of the data presented on this receipt. **If an error is noted on this Filing Receipt, please submit a written request for a Filing Receipt Correction. Please provide a copy of this Filing Receipt with the changes noted thereon. If you received a "Notice to File Missing Parts" for this application, please submit any corrections to this Filing Receipt with your reply to the Notice. When the USPTO processes the reply to the Notice, the USPTO will generate another Filing Receipt incorporating the requested corrections**

Applicant(s)

James M. Brugger, Newburyport, MA;
Jeffrey H. Burbank, Boxford, MA;
Dennis M. Treu, Bedford, NH;

Power of Attorney: The patent practitioners associated with Customer Number 000181

Domestic Priority data as claimed by applicant

This application is a DIV of 09/865,905 05/24/2001 PAT 6,852,090
which is a CON of 09/513,773 02/25/2000 PAT 6,579,253
which is a DIV of 09/451,238 11/29/1999 ABN

Foreign Applications

If Required, Foreign Filing License Granted: 05/29/2004

The country code and number of your priority application, to be used for filing abroad under the Paris Convention, is **US 10/796,899**

Projected Publication Date: Not Applicable

Non-Publication Request: No

Early Publication Request: No
**** SMALL ENTITY ****

Title

Blood flow control in a blood treatment device

Preliminary Class

604

PROTECTING YOUR INVENTION OUTSIDE THE UNITED STATES

Since the rights granted by a U.S. patent extend only throughout the territory of the United States and have no effect in a foreign country, an inventor who wishes patent protection in another country must apply for a patent in a specific country or in regional patent offices. Applicants may wish to consider the filing of an international application under the Patent Cooperation Treaty (PCT). An international (PCT) application generally has the same effect as a regular national patent application in each PCT-member country. The PCT process **simplifies** the filing of patent applications on the same invention in member countries, but **does not result** in a grant of "an international patent" and does not eliminate the need of applicants to file additional documents and fees in countries where patent protection is desired.

Almost every country has its own patent law, and a person desiring a patent in a particular country must make an application for patent in that country in accordance with its particular laws. Since the laws of many countries differ in various respects from the patent law of the United States, applicants are advised to seek guidance from specific foreign countries to ensure that patent rights are not lost prematurely.

Applicants also are advised that in the case of inventions made in the United States, the Director of the USPTO must issue a license before applicants can apply for a patent in a foreign country. The filing of a U.S. patent application serves as a request for a foreign filing license. The application's filing receipt contains further information and guidance as to the status of applicant's license for foreign filing.

Applicants may wish to consult the USPTO booklet, "General Information Concerning Patents" (specifically, the section entitled "Treaties and Foreign Patents") for more information on timeframes and deadlines for filing foreign patent applications. The guide is available either by contacting the USPTO Contact Center at 800-786-9199, or it can be viewed on the USPTO website at http://www.uspto.gov/web/offices/pac/doc/general/index.html.

For information on preventing theft of your intellectual property (patents, trademarks and copyrights), you may wish to consult the U.S. Government website, http://www.stopfakes.gov. Part of a Department of Commerce initiative, this website includes self-help "toolkits" giving innovators guidance on how to protect intellectual property in specific countries such as China, Korea and Mexico. For questions regarding patent enforcement issues, applicants may call the U.S. Government hotline at 1-866-999-HALT (1-866-999-4158).

LICENSE FOR FOREIGN FILING UNDER

Title 35, United States Code, Section 184

Title 37, Code of Federal Regulations, 5.11 & 5.15

GRANTED

The applicant has been granted a license under 35 U.S.C. 184, if the phrase "IF REQUIRED, FOREIGN FILING LICENSE GRANTED" followed by a date appears on this form. Such licenses are issued in all applications where the conditions for issuance of a license have been met, regardless of whether or not a license may be required as

set forth in 37 CFR 5.15. The scope and limitations of this license are set forth in 37 CFR 5.15(a) unless an earlier license has been issued under 37 CFR 5.15(b). The license is subject to revocation upon written notification. The date indicated is the effective date of the license, unless an earlier license of similar scope has been granted under 37 CFR 5.13 or 5.14.

This license is to be retained by the licensee and may be used at any time on or after the effective date thereof unless it is revoked. This license is automatically transferred to any related applications(s) filed under 37 CFR 1.53(d). This license is not retroactive.

The grant of a license does not in any way lessen the responsibility of a licensee for the security of the subject matter as imposed by any Government contract or the provisions of existing laws relating to espionage and the national security or the export of technical data. Licensees should apprise themselves of current regulations especially with respect to certain countries, of other agencies, particularly the Office of Defense Trade Controls, Department of State (with respect to Arms, Munitions and Implements of War (22 CFR 121-128)); the Bureau of Industry and Security, Department of Commerce (15 CFR parts 730-774); the Office of Foreign AssetsControl, Department of Treasury (31 CFR Parts 500+) and the Department of Energy.

NOT GRANTED

No license under 35 U.S.C. 184 has been granted at this time, if the phrase "IF REQUIRED, FOREIGN FILING LICENSE GRANTED" DOES NOT appear on this form. Applicant may still petition for a license under 37 CFR 5.12, if a license is desired before the expiration of 6 months from the filing date of the application. If 6 months has lapsed from the filing date of this application and the licensee has not received any indication of a secrecy order under 35 U.S.C. 181, the licensee may foreign file the application pursuant to 37 CFR 5.15(b).

PTO/SB/63 (08-08)
Approved for use through 08/31/2008. OMB 0651-0031
U.S. Patent and Trademark Office; U.S. DEPARTMENT OF COMMERCE
Under the Paperwork Reduction Act of 1995, no persons are required to a collection of information unless it displays a valid OMB control number.

TERMINAL DISCLAIMER TO ACCOMPANY PETITION	Docket Number (Optional)

In re Application of:

Name:

Application Number:

Filed:

For:

The owner*, _____ of _____ percent interest in the above-identified application hereby disclaims a terminal part of the term of any patent granted the above-identified application equivalent to: (1) if the above-identified application is a design application, the period of abandonment of the above-identified application, and (2) if the above-identified application is a utility or plant application, the lesser of: (a) the period of abandonment of the application; or (b) the period extending beyond twenty years from the date on which the above-identified application was filed in the United States or, if the application contains a specific reference to an earlier filed application(s) under 35 U.S.C. 120, 121, or 365(c), from the date on which the earliest such application was filed. This disclaimer also applies to any patent granted on a utility or plant application filed before June 8, 1995, or a design application, that contains a specific reference under 35 U.S.C. 120, 121, or 365(c) to the above-identified application. This disclaimer is binding upon the grantee, and its successors or assigns.

Check either box 1 or 2 below, if appropriate.

1. ☐ For submissions on behalf of an organization (e.g., corporation, partnership, university, government agency, etc.), the undersigned is empowered to act on behalf of the organization.
2. ☐ The undersigned is an attorney or agent of record. Registration Number_____.

_____	_____
Signature	Date
_____	_____
Typed or Printed Name	Telephone Number

☐ Terminal disclaimer fee under 37 CFR 1.20(d) included.

WARNING: Information on this form may become public. Credit card information should not be included on this form. Provide credit card information and authorization on PTO-2038.

* Statement under 37 CFR 3.73(b) is required if terminal disclaimer is signed by the assignee (owner). Form PTO/SB/96 may be used for making this certification. See MPEP § 324.

This collection of information is required by 37 CFR 1.137. The information is required to obtain or retain a benefit by the public which is to file (and by the USPTO to process) an application. Confidentiality is governed by 35 U.S.C. 122 and 37 CFR 1.11 and 1.14. This collection is estimated to take 12 minutes to complete, including gathering, preparing, and submitting the completed application form to the USPTO. Time will vary depending upon the individual case. Any comments on the amount of time you require to complete this form and/or suggestions for reducing this burden, should be sent to the Chief Information Officer, U.S. Patent and Trademark Office, U.S. Department of Commerce, P.O. Box 1450, Alexandria, VA 22313-1450. DO NOT SEND FEES OR COMPLETED FORMS TO THIS ADDRESS. SEND TO: **Commissioner for Patents, P.O. Box 1450, Alexandria, VA 22313-1450.**

If you need assistance in completing the form, call 1-800-PTO-9199 and select option 2.

Privacy Act Statement

The **Privacy Act of 1974 (P.L. 93-579)** requires that you be given certain information in connection with your submission of the attached form related to a patent application or patent. Accordingly, pursuant to the requirements of the Act, please be advised that: (1) the general authority for the collection of this information is 35 U.S.C. 2(b)(2); (2) furnishing of the information solicited is voluntary; and (3) the principal purpose for which the information is used by the U.S. Patent and Trademark Office is to process and/or examine your submission related to a patent application or patent. If you do not furnish the requested information, the U.S. Patent and Trademark Office may not be able to process and/or examine your submission, which may result in termination of proceedings or abandonment of the application or expiration of the patent.

The information provided by you in this form will be subject to the following routine uses:

1. The information on this form will be treated confidentially to the extent allowed under the Freedom of Information Act (5 U.S.C. 552) and the Privacy Act (5 U.S.C 552a). Records from this system of records may be disclosed to the Department of Justice to determine whether disclosure of these records is required by the Freedom of Information Act.
2. A record from this system of records may be disclosed, as a routine use, in the course of presenting evidence to a court, magistrate, or administrative tribunal, including disclosures to opposing counsel in the course of settlement negotiations.
3. A record in this system of records may be disclosed, as a routine use, to a Member of Congress submitting a request involving an individual, to whom the record pertains, when the individual has requested assistance from the Member with respect to the subject matter of the record.
4. A record in this system of records may be disclosed, as a routine use, to a contractor of the Agency having need for the information in order to perform a contract. Recipients of information shall be required to comply with the requirements of the Privacy Act of 1974, as amended, pursuant to 5 U.S.C. 552a(m).
5. A record related to an International Application filed under the Patent Cooperation Treaty in this system of records may be disclosed, as a routine use, to the International Bureau of the World Intellectual Property Organization, pursuant to the Patent Cooperation Treaty.
6. A record in this system of records may be disclosed, as a routine use, to another federal agency for purposes of National Security review (35 U.S.C. 181) and for review pursuant to the Atomic Energy Act (42 U.S.C. 218(c)).
7. A record from this system of records may be disclosed, as a routine use, to the Administrator, General Services, or his/her designee, during an inspection of records conducted by GSA as part of that agency's responsibility to recommend improvements in records management practices and programs, under authority of 44 U.S.C. 2904 and 2906. Such disclosure shall be made in accordance with the GSA regulations governing inspection of records for this purpose, and any other relevant (*i.e.*, GSA or Commerce) directive. Such disclosure shall not be used to make determinations about individuals.
8. A record from this system of records may be disclosed, as a routine use, to the public after either publication of the application pursuant to 35 U.S.C. 122(b) or issuance of a patent pursuant to 35 U.S.C. 151. Further, a record may be disclosed, subject to the limitations of 37 CFR 1.14, as a routine use, to the public if the record was filed in an application which became abandoned or in which the proceedings were terminated and which application is referenced by either a published application, an application open to public inspection or an issued patent.
9. A record from this system of records may be disclosed, as a routine use, to a Federal, State, or local law enforcement agency, if the USPTO becomes aware of a violation or potential violation of law or regulation.

PTO/SB/122 (01-06)
Approved for use through 12/31/2008. OMB 0651-0035
U.S. Patent and Trademark Office; U.S. DEPARTMENT OF COMMERCE
Under the Paperwork Reduction Act of 1995, no persons are required to respond to a collection of information unless it displays a valid OMB control number.

CHANGE OF CORRESPONDENCE ADDRESS
Application

Address to:
Commissioner for Patents
P.O. Box 1450
Alexandria, VA 22313-1450

Application Number	
Filing Date	
First Named Inventor	
Art Unit	
Examiner Name	
Attorney Docket Number	

Please change the Correspondence Address for the above-identified patent application to:

☐ The address associated with Customer Number: [ ]

OR

☐ Firm or Individual Name

Address

City	State	Zip

Country

Telephone	Email

This form cannot be used to change the data associated with a Customer Number. To change the data associated with an existing Customer Number use "Request for Customer Number Data Change" (PTO/SB/124).

I am the:

☐ Applicant/Inventor

☐ Assignee of record of the entire interest.
Statement under 37 CFR 3.73(b) is enclosed. (Form PTO/SB/96).

☐ Attorney or agent of record. Registration Number _____.

☐ Registered practitioner named in the application transmittal letter in an application without an executed oath or declaration. See 37 CFR 1.33(a)(1). Registration Number_____.

Signature

Typed or Printed Name

Date	Telephone

NOTE: Signatures of all the inventors or assignees of record of the entire interest or their representative(s) are required. Submit multiple forms if more than one signature is required, see below*.

☐ *Total of _____forms are submitted.

This collection of information is required by 37 CFR 1.33. The information is required to obtain or retain a benefit by the public which is to file (and by the USPTO to process) an application. Confidentiality is governed by 35 U.S.C. 122 and 37 CFR 1.11 and 1.14. This collection is estimated to take 3 minutes to complete, including gathering, preparing, and submitting the completed application form to the USPTO. Time will vary depending upon the individual case. Any comments on the amount of time you require to complete this form and/or suggestions for reducing this burden, should be sent to the Chief Information Officer, U.S. Patent and Trademark Office, U.S. Department of Commerce, P.O. Box 1450, Alexandria, VA 22313-1450. DO NOT SEND FEES OR COMPLETED FORMS TO THIS ADDRESS. SEND TO: **Commissioner for Patents, P.O. Box 1450, Alexandria, VA 22313-1450.**

If you need assistance in completing the form, call 1-800-PTO-9199 and select option 2.

Privacy Act Statement

The **Privacy Act of 1974 (P.L. 93-579)** requires that you be given certain information in connection with your submission of the attached form related to a patent application or patent. Accordingly, pursuant to the requirements of the Act, please be advised that: (1) the general authority for the collection of this information is 35 U.S.C. 2(b)(2); (2) furnishing of the information solicited is voluntary; and (3) the principal purpose for which the information is used by the U.S. Patent and Trademark Office is to process and/or examine your submission related to a patent application or patent. If you do not furnish the requested information, the U.S. Patent and Trademark Office may not be able to process and/or examine your submission, which may result in termination of proceedings or abandonment of the application or expiration of the patent.

The information provided by you in this form will be subject to the following routine uses:

1. The information on this form will be treated confidentially to the extent allowed under the Freedom of Information Act (5 U.S.C. 552) and the Privacy Act (5 U.S.C 552a). Records from this system of records may be disclosed to the Department of Justice to determine whether disclosure of these records is required by the Freedom of Information Act.
2. A record from this system of records may be disclosed, as a routine use, in the course of presenting evidence to a court, magistrate, or administrative tribunal, including disclosures to opposing counsel in the course of settlement negotiations.
3. A record in this system of records may be disclosed, as a routine use, to a Member of Congress submitting a request involving an individual, to whom the record pertains, when the individual has requested assistance from the Member with respect to the subject matter of the record.
4. A record in this system of records may be disclosed, as a routine use, to a contractor of the Agency having need for the information in order to perform a contract. Recipients of information shall be required to comply with the requirements of the Privacy Act of 1974, as amended, pursuant to 5 U.S.C. 552a(m).
5. A record related to an International Application filed under the Patent Cooperation Treaty in this system of records may be disclosed, as a routine use, to the International Bureau of the World Intellectual Property Organization, pursuant to the Patent Cooperation Treaty.
6. A record in this system of records may be disclosed, as a routine use, to another federal agency for purposes of National Security review (35 U.S.C. 181) and for review pursuant to the Atomic Energy Act (42 U.S.C. 218(c)).
7. A record from this system of records may be disclosed, as a routine use, to the Administrator, General Services, or his/her designee, during an inspection of records conducted by GSA as part of that agency's responsibility to recommend improvements in records management practices and programs, under authority of 44 U.S.C. 2904 and 2906. Such disclosure shall be made in accordance with the GSA regulations governing inspection of records for this purpose, and any other relevant (*i.e.*, GSA or Commerce) directive. Such disclosure shall not be used to make determinations about individuals.
8. A record from this system of records may be disclosed, as a routine use, to the public after either publication of the application pursuant to 35 U.S.C. 122(b) or issuance of a patent pursuant to 35 U.S.C. 151. Further, a record may be disclosed, subject to the limitations of 37 CFR 1.14, as a routine use, to the public if the record was filed in an application which became abandoned or in which the proceedings were terminated and which application is referenced by either a published application, an application open to public inspection or an issued patent.
9. A record from this system of records may be disclosed, as a routine use, to a Federal, State, or local law enforcement agency, if the USPTO becomes aware of a violation or potential violation of law or regulation.

Attorney Docket No. T4342-14198US21

IN THE UNITED STATES PATENT AND TRADEMARK OFFICE

In re Patent Application of:

First Named Inventor: BRUGGER, James M. **Art Unit: 3772**

Appln. No.: 10/796,899 **Examiner: Bianco, Patricia**

Filed: March 8, 2004 **Confirmation No.: 1653**

For: BLOOD FLOW CONTROL IN A BLOOD TREATMENT DEVICE

* * *

RENEWED PETITION UNDER 37 C.F.R. § 1.78(a)(3)

Commissioner for Patents
P.O. Box 1450
Alexandria, VA 22313-1450

Sir:

This is a petition for a request to accept an unintentionally delayed claim under 35 U.S.C. 120 for the benefit of prior-filed U.S. Patent Application No. 09/451,238, filed November 29, 1999.

The petition is accompanied by an Amendment, submitted herewith, to amend the specification to include the reference required by 35 U.S.C. 120 and paragraph (a)(2) of 37 C.F.R. 1.78.

Applicants acknowledge that the entire delay between the date the claim was due under paragraph (a)(2)(ii) of 37 C.F.R. 1.78 and the date the claim was filed was unintentional.

The Commissioner is hereby authorized to charge Deposit Account No. 50-1165 (53951-121) for the required surcharge set forth in Sec. 1.17(t). If any extension of time is

required in connection with the filing of this paper and has not been separately requested, such extension is hereby requested.

Respectfully submitted,

Date: 7/16/08

By: _____
Mark A. Catan
Reg. No. 38,720

Miles & Stockbridge, P.C.
1751 Pinnacle Drive
Suite 500
McLean, Virginia 22102-3833
(703) 903-9000

Amendments to the Specification:

Page 1:

Please substitute the following replacement paragraph for the paragraph after the heading RELATED APPLICATIONS.

This application is a divisional and claims benefit of U.S. Serial No. 09/865,905, filed on May 24, 2001, now U.S. Patent No. 6,852,090, which is a continuation of U.S. Serial No. 09/513,773, now U.S. Patent No. 6,579,253, which is a divisional of U.S. Serial No. 09/451,238, filed on November 29, 1999, now abandoned. ~~the contents of each of which is hereby incorporated by reference herein.~~

UNITED STATES PATENT AND TRADEMARK OFFICE

Commissioner for Patents
United States Patent and Trademark Office
P.O. Box 1450
Alexandria, VA 22313-1450
www.uspto.gov

David Newman Chartered
P.O. Box 956
Indian Head, MD 20640

COPY MAILED

APR 0 4 2007

OFFICE OF PETITIONS

In re Application of
David Baran et al.
Application No. 10/796,909
Filed: March 10, 2004
Attorney Docket No. GBTV02US

DECISION ON PETITION
TO WITHDRAW
FROM RECORD

This is a decision on the Request to Withdraw as attorney or agent of record under 37 C.F.R. § 1.36(b), filed January 30, 2007.

The request is **NOT APPROVED**.

A grantable request to withdraw as attorney/agent of record must be signed by every attorney/agent seeking to withdraw or contain a clear indication that one attorney is signing on behalf of another/others. A request to withdraw will not be approved unless at least 30 (thirty) days would remain between the date of approval and the later of the expiration date of a time to file a response or the expiration date of the maximum time period which can be extended under 37 C.F.R. § 1.136(a).

The Office cannot approve the request at this time since the reasons provided do not meet any of the conditions under the mandatory or permissive categories enumerated in 37 CFR 10.40. Section 10.40 of Title 37 of the Code of Federal Regulation states, "[a] practitioner shall not withdraw from employment in a proceeding before the Office without permission from the Office[.]" More specifically, 37 CFR 10.40 states, "[i]f paragraph (b) of this section is not applicable, a practitioner may not request permission to withdraw in matter pending before the Office unless such request or such withdrawal is" for one the permissive reasons listed in 37 CFR 10.40(c). The reason set forth in the request, "[t]he undersigned attorney is retiring from the practice of law," does not meet any of the conditions set forth in 37 CFR 10.40.

A courtesy copy of this decision is being mailed to applicant.

All future communications from the Office will continue to be directed to the above-listed address until otherwise notified by applicant.

There are no pending office actions at this time.

Telephone inquiries concerning this decision should be directed to Kimberly Inabinet at 571-272- 4618.

Frances Hicks
Petitions Examiner
Office of Petitions

cc: David Baran
97 Mount Vernon Lane
Atherton, CA 94027

cc: David Baran
GOBACKTV, Inc.
937 Hamilton Avenue
Menlo Park, CA 94025

UNITED STATES PATENT AND TRADEMARK OFFICE

Commissioner for Patents
United States Patent and Trademark Office
P.O. Box 1450
Alexandria, VA 22313-1450
www.uspto.gov

MILES & STOCKBRIDGE PC
1751 PINNACLE DRIVE
SUITE 500
MCLEAN VA 22102-3833

COPY MAILED

MAR 28 2008

OFFICE OF PETITIONS

In re Application of
Brugger et al.
Application No. 10/796913
Filing Date: 03/08/2004
Attorney Docket No. T4342-14198US18

DECISION ON PETITION
UNDER 37 CFR 1.78(a)(3)

This is a decision on the "Petition Under 37 CFR 1.78(a)(3)," filed January 16, 2008, to accept an unintentionally delayed claim under 35 U.S.C. §120 for the benefit of priority to the prior-filed nonprovisional applications set forth in the concurrently filed Amendment.

The petition is **DISMISSED.**

A petition for acceptance of a claim for late priority under 37 CFR 1.78(a)(3) is only applicable to those applications filed on or after November 29, 2000. Further, the petition is appropriate only after the expiration of the period specified in 37 CFR 1.78(a)(2)(ii). In addition, the petition under 37 CFR 1.78(a)(3) must be accompanied by:

(1) the reference required by 35 U.S.C. § 120 and 37 CFR 1.78(a)(2)(i) of the prior-filed application, unless previously submitted;
(2) the surcharge set forth in § 1.17(t); and
(3) a statement that the entire delay between the date the claim was due under 37 CFR 1.78(a)(2)(ii) and the date the claim was filed was unintentional. The Director may require additional information where there is a question whether the delay was unintentional.

The petition does not comply with items **(1)** and **(3)**.

As to item **(1)**, the reference to add the above-noted, prior-filed application, no. 09/061,647, on page one following the first sentence of the specification is not acceptable as drafted since it improperly incorporates by reference the prior-filed application(s). An incorporation by reference statement added after an application's filing date is not effective because no new matter can be added to an application after its filing date (*see* 35 U.S.C. § 132(a)). If an incorporation by reference statement is included in an amendment to the specification to add a benefit claim under 35 U.S.C. § 120 after the filing date of the application, the amendment would

not be proper. When a benefit claim under 35 U.S.C. § 120 is submitted after the filing of an application, the reference to the prior application cannot include an incorporation by reference statement of the prior application. *See* Dart Industries v. Banner, 636 F.2d 684, 207 USPQ 273 (C.A.D.C. 1980). *Note* MPEP §§ 201.06(c) and 608.04(b).

As to item (**3**), the priority claim was due within four months of filing the application or within 16 months of the earliest priority date claimed. Thereafter, a petition for acceptance of a delayed priority claim requires a statement that the entire delay between the date the claim was due under 37 CFR 1.78(a)(5)(ii), and the date the claim was filed was unintentional. The present petition is filed by a party, Petitioner herein, that became of record in the application on March 12, 2008, by virtue of a Power of Attorney executed by the assignee, NxStage Medical, Inc. Petitioner herein was not of record for the entire period between the date the claim was due under 37 CFR 1.78(a)(5)(ii), and the date the claim was filed. Moreover, the assignee of record, NxStage Medical, Inc., became the assignee by virtue of an assignment executed August 24, 2004, more than five (5) months after the filing date of the present application[1]. As such, the Assignee is not in a position to know whether the entire period between the date the claim was due under 37 CFR 1.78(a)(5)(ii), and the date the claim was filed he date the claim was filed was unintentional. In view of the foregoing, there is a question whether Petitioner herein is in a position to know whether the entire delay between the date the claim was due and the date the claim was filed was unintentional.

Before the petition under 37 CFR § 1.78(a)(3) can be granted, a renewed petition and either an Application Data Sheet or a substitute amendment (complying with the provisions of 37 CFR 1.121 and 37 CFR 1.76(b)(5)), to correct the above matter, and a statement from a proper party, that the entire delay between the date the claim was due under paragraph (a)(2)(ii) of this section and the date the claim was filed was unintentional, are required.

Further correspondence with respect to this matter should be addressed as follows:

By mail: Mail Stop PETITIONS
Director for Patents
Post Office Box 1450
Alexandria, VA 22313-1450

By hand: Customer Service Window
Mail Stop Petitions
Randolph Building
401 Dulany Street
Alexandria, VA 22314

[1] The Assignment was recorded in this Office on September 23, 2004.

By hand: Customer Service Window
Mail Stop Petitions
Randolph Building
401 Dulany Street
Alexandria, VA 22314

By fax: (571) 273-8300
ATTN: Office of Petitions

Any questions concerning this matter may be directed to attorney Derek Woods at (571) 272-3232.

Anthony Knight
Supervisor
Office of Petitions

UNITED STATES PATENT AND TRADEMARK OFFICE

Commissioner for Patents
United States Patent and Trademark Office
P.O. Box 1450
Alexandria, VA 22313-1450
www.uspto.gov

MILES & STOCKBRIDGE PC
1751 PINNACLE DRIVE
SUITE 500
MCLEAN VA 22102-3833

COPY MAILED
SEP 29 2008

In re Application of	:	
Brugger et al.	:	
Application No. 10/796913	:	DECISION ON PETITION
Filing Date: 03/08/2004	:	UNDER 37 CFR 1.78(a)(3)
Attorney Docket No. T4342-14198US18	:	

This is a decision on the Renewed Petition under 37 C.F.R. § 1.78(a)(3), filed August 20, 2008, to accept an unintentionally delayed claim under 35 U.S.C. § 120 for the benefit of priority to the prior-filed nonprovisional application set forth in the amendment filed with the petition.

The petition is **GRANTED**.

A petition for acceptance of a claim for late priority under 37 CFR 1.78(a)(3) is only applicable to those applications filed on or after November 29, 2000. Further, the petition is appropriate only after the expiration of the period specified in 37 CFR 1.78(a)(2)(ii). In addition, the petition under 37 CFR 1.78(a)(3) must be accompanied by:

(1) the reference required by 35 U.S.C. § 120 and 37 CFR 1.78(a)(2)(i) of the prior-filed application, unless previously submitted;
(2) the surcharge set forth in § 1.17(t); and
(3) a statement that the entire delay between the date the claim was due under 37 CFR 1.78(a)(2)(ii) and the date the claim was filed was unintentional. The Director may require additional information where there is a question whether the delay was unintentional.

All of the above requirements having been satisfied, the late claim for priority under 35 U.S.C. § 120 is accepted as being unintentionally delayed.

The granting of the petition to accept the delayed benefit claim to the prior-filed application under 37 CFR 1.78(a)(3) should not be construed as meaning that this application is entitled to the benefit of the prior-filed application. In order for this application to be entitled to the benefit of the prior-filed application, all other requirements under 35 U.S.C. § 120 and 37 CFR 1.78(a)(1) and (a)(2) must be met. Similarly, the fact that the corrected Filing Receipt accompanying this decision on petition includes the prior-filed application should not be

construed as meaning that applicant is entitled to the claim for benefit of priority to the prior-filed application noted thereon. Accordingly, the examiner will, in due course, consider this benefit claim and determine whether the application is entitled to the benefit of the earlier filing date.

A corrected Filing Receipt, which includes the priority claim to the prior-filed nonprovisional application, accompanies this decision on petition.

Any inquiries concerning this decision may be directed to Derek Woods at (571) 272-3232. All other inquiries concerning either the examination procedures or status of the application should be directed to the Technology Center.

This application is being forwarded to Technology Center Art Unit 3761 for consideration by the examiner of applicant's entitlement to claim benefit of priority under 35 U.S.C. § 120 to the prior-filed application.

Anthony Knight
Supervisor
Office of Petitions

ATTACHMENT: Corrected Filing Receipt

UNITED STATES PATENT AND TRADEMARK OFFICE

UNITED STATES DEPARTMENT OF COMMERCE
United States Patent and Trademark Office
Address: COMMISSIONER FOR PATENTS
P.O. Box 1450
Alexandria, Virginia 22313-1450
www.uspto.gov

APPLICATION NUMBER	FILING or 371(c) DATE	GRP ART UNIT	FIL FEE REC'D	ATTY.DOCKET.NO	TOT CLAIMS	IND CLAIMS
10/796,913	03/08/2004	3761	493	T4342-14198US18	15	4

CONFIRMATION NO. 1674

CORRECTED FILING RECEIPT

181
MILES & STOCKBRIDGE PC
1751 PINNACLE DRIVE
SUITE 500
MCLEAN, VA 22102-3833

OC000000032200138

Date Mailed: 09/22/2008

Receipt is acknowledged of this non-provisional patent application. The application will be taken up for examination in due course. Applicant will be notified as to the results of the examination. Any correspondence concerning the application must include the following identification information: the U.S. APPLICATION NUMBER, FILING DATE, NAME OF APPLICANT, and TITLE OF INVENTION. Fees transmitted by check or draft are subject to collection. Please verify the accuracy of the data presented on this receipt. **If an error is noted on this Filing Receipt, please submit a written request for a Filing Receipt Correction. Please provide a copy of this Filing Receipt with the changes noted thereon. If you received a "Notice to File Missing Parts" for this application, please submit any corrections to this Filing Receipt with your reply to the Notice. When the USPTO processes the reply to the Notice, the USPTO will generate another Filing Receipt incorporating the requested corrections**

Applicant(s)

James M. Brugger, Newburyport, MA;
Jeffrey H. Burbank, Boxford, MA;
Dennis M. Treu, Bedford, NH;

Power of Attorney: The patent practitioners associated with Customer Number 000181

Domestic Priority data as claimed by applicant

This application is a DIV of 09/865,905 05/24/2001 PAT 6,852,090
which is a CON of 09/513,773 02/25/2000 PAT 6,579,253
which is a DIV of 09/451,238 11/29/1999 ABN

Foreign Applications

If Required, Foreign Filing License Granted: 05/28/2004

The country code and number of your priority application, to be used for filing abroad under the Paris Convention, is **US 10/796,913**

Projected Publication Date: Not Applicable

Non-Publication Request: No

Early Publication Request: No
**** SMALL ENTITY ****

Title

Registration of fluid circuit components in a blood treatment device

Preliminary Class

604

PROTECTING YOUR INVENTION OUTSIDE THE UNITED STATES

Since the rights granted by a U.S. patent extend only throughout the territory of the United States and have no effect in a foreign country, an inventor who wishes patent protection in another country must apply for a patent in a specific country or in regional patent offices. Applicants may wish to consider the filing of an international application under the Patent Cooperation Treaty (PCT). An international (PCT) application generally has the same effect as a regular national patent application in each PCT-member country. The PCT process **simplifies** the filing of patent applications on the same invention in member countries, but **does not result** in a grant of "an international patent" and does not eliminate the need of applicants to file additional documents and fees in countries where patent protection is desired.

Almost every country has its own patent law, and a person desiring a patent in a particular country must make an application for patent in that country in accordance with its particular laws. Since the laws of many countries differ in various respects from the patent law of the United States, applicants are advised to seek guidance from specific foreign countries to ensure that patent rights are not lost prematurely.

Applicants also are advised that in the case of inventions made in the United States, the Director of the USPTO must issue a license before applicants can apply for a patent in a foreign country. The filing of a U.S. patent application serves as a request for a foreign filing license. The application's filing receipt contains further information and guidance as to the status of applicant's license for foreign filing.

Applicants may wish to consult the USPTO booklet, "General Information Concerning Patents" (specifically, the section entitled "Treaties and Foreign Patents") for more information on timeframes and deadlines for filing foreign patent applications. The guide is available either by contacting the USPTO Contact Center at 800-786-9199, or it can be viewed on the USPTO website at http://www.uspto.gov/web/offices/pac/doc/general/index.html.

For information on preventing theft of your intellectual property (patents, trademarks and copyrights), you may wish to consult the U.S. Government website, http://www.stopfakes.gov. Part of a Department of Commerce initiative, this website includes self-help "toolkits" giving innovators guidance on how to protect intellectual property in specific countries such as China, Korea and Mexico. For questions regarding patent enforcement issues, applicants may call the U.S. Government hotline at 1-866-999-HALT (1-866-999-4158).

LICENSE FOR FOREIGN FILING UNDER

Title 35, United States Code, Section 184

Title 37, Code of Federal Regulations, 5.11 & 5.15

GRANTED

The applicant has been granted a license under 35 U.S.C. 184, if the phrase "IF REQUIRED, FOREIGN FILING LICENSE GRANTED" followed by a date appears on this form. Such licenses are issued in all applications where the conditions for issuance of a license have been met, regardless of whether or not a license may be required as

set forth in 37 CFR 5.15. The scope and limitations of this license are set forth in 37 CFR 5.15(a) unless an earlier license has been issued under 37 CFR 5.15(b). The license is subject to revocation upon written notification. The date indicated is the effective date of the license, unless an earlier license of similar scope has been granted under 37 CFR 5.13 or 5.14.

This license is to be retained by the licensee and may be used at any time on or after the effective date thereof unless it is revoked. This license is automatically transferred to any related applications(s) filed under 37 CFR 1.53(d). This license is not retroactive.

The grant of a license does not in any way lessen the responsibility of a licensee for the security of the subject matter as imposed by any Government contract or the provisions of existing laws relating to espionage and the national security or the export of technical data. Licensees should apprise themselves of current regulations especially with respect to certain countries, of other agencies, particularly the Office of Defense Trade Controls, Department of State (with respect to Arms, Munitions and Implements of War (22 CFR 121-128)); the Bureau of Industry and Security, Department of Commerce (15 CFR parts 730-774); the Office of Foreign AssetsControl, Department of Treasury (31 CFR Parts 500+) and the Department of Energy.

NOT GRANTED

No license under 35 U.S.C. 184 has been granted at this time, if the phrase "IF REQUIRED, FOREIGN FILING LICENSE GRANTED" DOES NOT appear on this form. Applicant may still petition for a license under 37 CFR 5.12, if a license is desired before the expiration of 6 months from the filing date of the application. If 6 months has lapsed from the filing date of this application and the licensee has not received any indication of a secrecy order under 35 U.S.C. 181, the licensee may foreign file the application pursuant to 37 CFR 5.15(b).

SPE RESPONSE FOR CERTIFICATE OF CORRECTION

Paper No.: _____

DATE : March 20, 2007

TO SPE OF : ART UNIT 3651

SUBJECT : Request for Certificate of Correction for Appl. No. 10/796917 patent No.: 7124876

Please respond to this request for a certificate of correction within 7 days.

Please review the requested changes/corrections as shown in the **COCIN** document(s) in the IFW application image. No new matter should be introduced, nor should the scope or meaning of the claims be changed.

Please complete the response (see below) and forward the completed response to scanning using document code **COCX**.

Magdalene Talley

Certificates of Correction Branch

703-308-9390 ext. 116

Thank You For Your Assistance

The request for issuing the above-identified correction(s) is hereby:

Note your decision on the appropriate box.

- ☑ **Approved** — **All** changes apply.
- ☐ **Approved in Part** — Specify below which changes **do not** apply.
- ☐ **Denied** — State the reasons for denial below.

Comments: _____

GENE O. CRAWFORD
SUPERVISORY PATENT EXAMINER

SPE

3651
Art Unit

UNITED STATES PATENT AND TRADEMARK OFFICE

Commissioner for Patents
United States Patent and Trademark Office
P.O. Box 1450
Alexandria, VA 22313-1450
www.uspto.gov

Hickman Palermo Truong & Becker, LLP
2055 Gateway Place
Suite 550
San Jose, CA 95110

COPY MAILED

AUG 16 2007

OFFICE OF PETITIONS

In re Application of	:	
Akio Sakamoto et al.	:	
Application No. 10/796,932	:	DECISION ON PETITION
Filed: March 9, 2004	:	TO WITHDRAW
Attorney Docket No. 60054-0016	:	FROM RECORD
	:	

This is a decision on the Request to Withdraw as attorney or agent of record under 37 C.F.R. § 1.36(b), filed March 27, 2007.

The request is **NOT APPROVED** as moot.

A review of the file record indicates that the power of attorney to Hickman Palermo Truong & Becker, LLP has been revoked by the assignee of the patent application on July 25, 2007. Accordingly, the request to withdraw under 37 C.F.R. § 1.36(b) is moot.

All future communications from the Office will continue to be directed to the below-listed address until otherwise notified by applicant.

Telephone inquires concerning this decision should be directed to Terri Williams at 571-272-2991.

T. Williams
Terri Williams
Petitions Examiner
Office of Petitions

cc: **Beyer Weaver LLP**
P.O. Box 70250
Oakland, CA 94612-0250

UNITED STATES PATENT AND TRADEMARK OFFICE

Commissioner for Patents
United States Patent and Trademark Office
P.O. Box 1450
Alexandria, VA 22313-1450
www.uspto.gov

TAREK N. FAHMI
APPLIED MATERIALS, INC.
PATENT COUNSEL
SANTA CLARA, CA 95052

COPY MAILED

AUG 1 0 2005

OFFICE OF PETITIONS

In re Application of	:	
Naftali, Ron	:	
Application No. 10/796,938	:	ON PETITION
Filed: March 9, 2004	:	
Attorney Docket No. 6317P024	:	

This is a decision on the petition under 37 C.F.R. § 1.137(b), filed July 15, 2005, to revive the above-identified application.

The petition is **DISMISSED AS MOOT.**

A Notice to File Missing Parts of Application (Notice) was mailed February 15, 2005. The Notice set a period for reply of two (2) months from the mail date of the Notice. Extensions of time under the provisions of 37 CFR 1.136(a) are permitted. Although the two-month reply period expired on April 16, 2005, extensions of time are acceptable until September 15, 2005.

Petitioner is still within the extendable period for reply. Accordingly, since the petition fee is unnecessary in view of the dismissal, $1020.00 of the $1500.00 petition fee will be transferred to a three-month extension of time to extend the period for reply to July 15, 2005. The remaining $480.00 will be credited to the deposit account as authorized.

This matter is being referred to the Office of Initial Patent Examination for further processing.

Telephone inquiries regarding this decision should be directed to the undersigned at (571) 272-3282.

Liana Chase
Petitions Examiner
Office of Petitions
Office of the Deputy Commissioner
for Patent Examination Policy

UNITED STATES PATENT & TRADEMARK OFFICE
Washington, D.C. 20231

REQUEST FOR PATENT FEE REFUND

1 Date of Request: 8/9/05 | 2 Serial/Patent # 10796938

	3 Please refund the following fee(s):	4 PAPER NUMBER	5 DATE FILED	6 AMOUNT
	Filing			$
	Amendment			$
	Extension of Time			$
	Notice of Appeal/Appeal			$
✓	Petition	Pet.	7/15/05	$ 480.00
	Issue			$
	Cert of Correction/Terminal Disc.			$
	Maintenance			$
	Assignment			$
	Other			$

7 TOTAL AMOUNT OF REFUND $ 480.00

8 TO BE REFUNDED BY:

	Treasury Check
✓	Credit Deposit A/C #:

9 02--2666

10 REASON:

	Overpayment
	Duplicate Payment
✓	No Fee Due (Explanation):

* Petition was unnecessary as appl. was not abandoned – money was transferred to a 3-mo. EOT.

11 REFUND REQUESTED BY:

TYPED/PRINTED NAME: Liana Chase TITLE: Pets. Examiner

SIGNATURE: Liana Chase PHONE: 272-3206

OFFICE: Petitions

****

THIS SPACE RESERVED FOR FINANCE USE ONLY:

APPROVED: Alicia Kelly DATE: 8/10/05

Instructions for completion of this form appear on the back. After completion, attach white and yellow copies to the official file and mail or hand-carry to:

Office of Finance
Refund Branch
Crystal Park One, Room 802B

FORM PTO 1577
(01/90)

UNITED STATES PATENT AND TRADEMARK OFFICE

Commissioner for Patents
United States Patent and Trademark Office
P.O. Box 1450
Alexandria, VA 22313-1450
www.uspto.gov

WEYERHAEUSER COMPANY
INTELLECTUAL PROPERTY DEPT., CH 1J27
P.O. BOX 9777
FEDERAL WAY WA 98063

COPY MAILED

MAR 1 5 2005

OFFICE OF PETITIONS

In re Application of	:	
David Kent	:	
Application No. 10/796,944	:	ON PETITION
Filed: March 9, 2004	:	
Attorney Docket No. 24756B	:	

This is a decision on the petition under 37 CFR 1.137(b), filed October 5, 2004, to revive the above-identified application.

The petition is **GRANTED**.

The above-identified application became abandoned for failure to submit the issue fee in a timely manner in reply to the Notice of Allowance mailed July 2, 2004, which set a statutory period for reply of three (3) months. Accordingly, the above-identified application became abandoned on October 4, 2004.

Telephone inquiries concerning this decision should be directed to the undersigned at (571) 272-3208.

This matter is being referred to Patent Publication.

Karen Creasy

Karen Creasy
Petitions Examiner
Office of Petitions
Office of the Deputy Commissioner
for Patent Examination Policy

UNITED STATES PATENT AND TRADEMARK OFFICE

Commissioner for Patents
United States Patent and Trademark Office
P.O. Box 1450
Alexandria, VA 22313-1450
www.uspto.gov

WILMERHALE/BOSTON
60 STATE STREET
BOSTON MA 02109

COPY MAILED

MAY 1 4 2008

OFFICE OF PETITIONS

In re Application of
Cook et al.
Application No.10/796,949
Filed: March 10, 2004
Attorney Docket Number: 71239

DECISION

This is in response to the petition under 37 CFR 1.47(a), filed March 5, 2008.[1] In the alternative, petitioner has requested treatment under 37 CFR 1.183.

In response to the September 13, 2007 non-final Office Action, petitioner has submitted a petition under 37 CFR 1.47. The non-final Office action required a new oath or declaration because a date was not provided next to the signature of Henry Steinberg on the March 10, 2004 declaration. Petitioner states that inventor Henry Steinberg has refused to execute a supplemental declaration.

A review of the March 10, 2004 declaration shows that the executed declaration does not contain a date. However, a date is no longer required on a declaration. Pursuant to MPEP 602.05:

> The Office no longer checks the date of execution of the oath or declaration and the Office will no longer require a newly executed oath or declaration based on an oath or declaration being stale (that is when the date of execution is more than 3 months prior to the filing date of the application) or where the date of execution has been omitted. However, applicants are reminded that they have a continuing duty of disclosure under 37 CFR 1.56

[1]Once an application has received a properly executed oath or declaration and such has been placed on the files for examination, the provisions of 37 CFR 1.47 no longer apply. Rather, the remedy for treating an inventor's refusal to also sign a supplemental oath or declaration is waiver of 37 CFR 1.67. See MPEP 603.

Accordingly, the petitions are **Dismissed As Moot**

Deposit account 08-0219 will be refunded the $200.00 petition fee.

This application is being referred to Technology Center AU 2136 for appropriate action by the Examiner in the normal course of business on the reply received

Telephone inquiries related to this decision may be directed to the undersigned at (571) 272-3215.

Charlema R. Grant
Petitions Attorney
Office of Petitions

UNITED STATES PATENT AND TRADEMARK OFFICE

Commissioner for Patents
United States Patent and Trademark Office
P.O. Box 1450
Alexandria, VA 22313-1450
www.uspto.gov
DIW 10-04

PATTON BOGGS LLP
ATTORNEYS AT LAW
2550 M STREET, NW
WASHINGTON DC 20037-1350

COPY MAILED

OCT 29 2004

OFFICE OF PETITIONS

In re Application of	:	
Baughn, Baughn, and Oakey	:	
Application No. 10/796,969	:	DECISION REFUSING STATUS
Filed: 11 March, 2004	:	UNDER 37 CFR 1.47(a)
Atty Dkt No. 021200.0101PTUS	:	

This is in response to the petition filed under 37 CFR 1.47(a)[1] on 1 October, 2004.

The petition is **DISMISSED**.

Rule 47 applicant is given TWO MONTHS from the mailing date of this decision to reply, correcting the below-noted deficiencies. Any reply should be entitled "Request for Reconsideration of Petition Under 37 CFR 1.47(a)," and should only address the deficiencies noted below, except that the reply may include an oath or declaration executed by the non-signing inventor. **FAILURE TO RESPOND WILL RESULT IN ABANDONMENT OF THE APPLICATION.** Extensions of time may be obtained in accordance with 37 CFR 1.136(a).

The above-identified application was filed on 11 March, 2004, without an executed oath or declaration.

Accordingly, on 1 June, 2004, Initial Patent Examination Division mailed a Notice to File Missing Parts of Nonprovisional Application, requiring an executed oath or declaration and a surcharge for its late filing. A two (2) month period for reply was set.

[1] A petition under 37 CFR 1.47(b) is inappropriate in this instance since one of the inventors has signed the declaration. A petition under 37 CFR 1.47(b) is only appropriate where none of the inventors will sign. Accordingly, the petition will be treated as a petition under 37 CFR 1.47(a).

In response, on 1 October, 2004, petitioners filed the present petition, accompanied by a two (2) month extension of time and fee, the surcharge, and a declaration naming Antony L. Baughn, Timothy S. Baughn, and Douglas Oakey as joint inventors and signed by all inventors except Oakey on behalf of themselves and joint inventor Oakey.

Petitioners assert that a letter was mailed to the non-signing inventor, but was returned as undeliverable. A copy of the letter and the envelope showing it was returned as undeliverable have been included with the present petition.

A grantable petition under 37 CFR 1.47(a) requires:

(1) proof that the non-signing inventor cannot be reached or located, notwithstanding diligent effort, or refuses to sign the oath or declaration after having been presented with the application papers (specification, claims and drawings);

(2) an acceptable oath or declaration in compliance with 35 U.S.C. §§ 115 and 116;

(3) the petition fee;

(4) a surcharge of $130 or $65 (small entity) if the petition and/or declaration is not filed at the time of filing the application, and

(5) a statement of the last known address of the non-signing inventor.

The petition lacks item (2).

With regard to item (2), the declaration present with the present petition is defective in that it lacks the residence, mailing address, and citizenship of non-signing inventor Oakey. The oath or declaration must identify the mailing address, and the residence if an inventor lives at a location which is different from where the inventor customarily receives mail, of each inventor.[2] Further, a statement of the inventor's citizenship is a statutory requirement and cannot be waived.[3] Petitioners must submit a new oath or declaration in compliance with 37 CFR 1.63 and 1.67, signed by all of the signing inventors on behalf of themselves and the non-signing inventor.

Further correspondence with respect to this matter should be addressed as follows:

---

[2] 37 CFR 1.63(c).

[3] 35 U.S.C. § 115, MPEP 605.01.

By mail: Mail Stop Petition
Commissioner for Patents
P.O. Box 1450
Alexandria, VA 22313-1450

By FAX: (703) 872-9306
Attn: Office of Petitions

By hand: U.S. Patent and Trademark Office
220 20th Street, S.
Customer Window, Mail Stop Petitions
Crystal Plaza 2, Lobby, Room 1B03
Arlington, VA 22202

Telephone inquiries related to this decision should be directed to the undersigned at 571-272-3231.

D Wood

Douglas I. Wood
Senior Petitions Attorney
Office of Petitions

UNITED STATES PATENT AND TRADEMARK OFFICE

Commissioner for Patents
United States Patent and Trademark Office
P.O. Box 1450
Alexandria, VA 22313-1450
www.uspto.gov
DIW 01-05

PATTON BOGGS LLP
ATTORNEYS AT LAW
2550 M STREET, NW
WASHINGTON DC 20037-1350

COPY MAILED

JAN 07 2005

OFFICE OF PETITIONS

In re Application of	:	
Baughn, Baughn, and Oakey	:	
Application No. 10/796,969	:	DECISION ACCORDING STATUS
Filed: 11 March, 2004	:	UNDER 37 CFR 1.47(a)
Atty Dkt No. 021200.0101PTUS	:	

This is in response to the renewed petition filed under 37 CFR 1.47(a) on 10 November, 2004.

The petition is **GRANTED**.

Petitioners have shown that non-signing inventor Douglas Oakey cannot be found. Specifically, petitioners have shown that a letter was sent via first class mail to the last known addresses of the non-signing joint inventor was returned by the U.S. Post Office as undeliverable. Despite diligent efforts on the part of petitioners, the inventor could not be located.

This application and papers have been reviewed and found in compliance with 37 CFR 1.47(a). This application is hereby accorded Rule 1.47(a) status.

As provided in Rule 1.47(c), this Office will forward notice of this application's filing to the non-signing inventor at the address given in the Declaration. Notice of the filing of this application will also be published in the *Official Gazette*.

The application is being referred to Technology Center 3635 for examination in due course.

Telephone inquiries related to this decision should be directed to the undersigned at 571-272-3231.

DWood

Douglas I. Wood
Senior Petitions Attorney
Office of Petitions

UNITED STATES PATENT AND TRADEMARK OFFICE

Commissioner for Patents
United States Patent and Trademark Office
P.O. Box 1450
Alexandria, VA 22313-1450
www.uspto.gov
OIW 01-05

Douglas Oakey
3371 Crestview Lane
Gulf Breeze FL 32563

COPY MAILED

JAN 07 2005

OFFICE OF PETITIONS

In re Application of
Baughn et al.
Application No. 10/796,969
Filed: 11 March, 2004
For: INTEGRATED STORM SHUTTER

Dear Mr. Oakey:

You are named as a joint inventor in the above identified United States patent application, filed under the provisions of 35 U.S.C. 116 (United States Code), and 37 CFR 1.47(a), Rules of Practice in Patent Cases. Should a patent be granted on the application you will be designated therein as a joint inventor.

As a named inventor you are entitled to inspect any paper in the file wrapper of the application, order copies of all or any part thereof (at a prepaid cost per 37 CFR 1.19) or make your position of record in the application. Alternatively, you may arrange to do any of the preceding through a registered patent attorney or agent presenting written authorization from you. If you care to join the application, counsel of record (see below) would presumably assist you. Joining in the application would entail the filing of an appropriate oath or declaration by you pursuant to 37 CFR 1.63.

Telephone inquiries regarding this communication should be directed to the undersigned at 571/272-3231. Requests for information regarding your application should be directed to the File Information Unit at 703/308-2733. Information regarding how to pay for and order a copy of the application, or a specific paper in the application, should be directed to Certification Division at 703/308-9726 or 1-800-972-6382 (outside the Washington D.C. area).

Douglas I. Wood
Senior Petitions Attorney
Office of Petitions

PATTON BOGGS LLP
ATTORNEYS AT LAW
2550 M STREET NW
WASHINGTON DC 20037-1350

UNITED STATES PATENT AND TRADEMARK OFFICE

Commissioner for Patents
United States Patent and Trademark Office
P.O. Box 1450
Alexandria, VA 22313-1450
www.uspto.gov

FINNEGAN, HENDERSON, FARABOW, GARRETT & DUNNER LLP
901 NEW YORK AVENUE, NW
WASHINGTON DC 20001-4413

COPY MAILED
JUN 20 2008

In re Application of	:	
Xavier BLIN et al.	:	
Application No. 10/796,979	:	DECISION ON PETITION
Filed: March 11, 2004	:	
Attorney Docket No. **05725.1343-00**	:	

This is a decision on the petition under the unintentional provisions of 37 CFR 1.137(b), filed May 08, 2008, to revive the above-identified application.

The petition is **GRANTED**.

The two-month period for filing an appeal brief under 37 CFR 41.37 (accompanied by the fee required by 37 CFR 41.20(b)(2)), runs from the date of this decision.

This application became abandoned for failure to timely file a reply within the meaning of 37 CFR 1.113 to the final Office action of November 01, 2007. The proposed reply required for consideration of a petition to revive must be a Notice of Appeal (and appeal fee required by 37 CFR 41.20(b)(2)), an amendment that *prima facie* places the application in condition for allowance, a Request for Continued Examination (RCE) and submission (37 CFR 1.114), or the filing of a continuing application under 37 CFR 1.53(b). See MPEP 711.03(c)(III)(A)(2). A one-month extension of time pursuant to the provisions of 37 CFR 1.136(a) was obtained. Accordingly, the date of abandonment of this application is March 02, 2008.

The petition satisfies the requirements of 37 CFR 1.137(b) in that petitioner has supplied (1) the reply in the form of a Notice of Appeal; (2) the petition fee of $1540; and (3) a proper statement of unintentional delay. Accordingly, the reply to the final Office Action of November 01, 2007 is accepted as having been unintentionally delayed.

An extension of time under 37 CFR 1.136 must be filed prior to the expiration of the maximum extendable period for reply. See In re Application of S., 8 USPQ2d 1630, 1631 (Comm'r Pats.

1988). Since the $120 extension of time fee submitted with the petition on May 08, 2008 was subsequent to the maximum extendable period for reply, petitioner may request a refund of this fee by writing to the following address: Mail Stop 16, Commissioner for Patents, P. O. Box 1450, Alexandria, VA 22313-1450. A copy of this decision should accompany petitioner's request.

Telephone inquiries concerning this decision should be directed to Tredelle Jackson at (571) 272-2783.

This application is being referred to Technology Center AU 1614 to await the filing of an appeal brief or for such other appropriate reply as may be submitted to continue prosecution of the application.

Ramesh Krishnamurthy

Ramesh Krishnamurthy
Petitions Examiner
Office of Petitions

UNITED STATES PATENT AND TRADEMARK OFFICE

COMMISSIONER FOR PATENTS
UNITED STATES PATENT AND TRADEMARK OFFICE
P.O. BOX 1450
ALEXANDRIA, VA 22313-1450
www.uspto.gov

FINNEGAN, HENDERSON, FARABOW, GARRETT & DUNNER
LLP
901 NEW YORK AVENUE, NW
WASHINGTON DC 20001-4413

COPY MAILED

JUL 19 2005

OFFICE OF PETITIONS

Applicant: Ramin et al.
Appl. No.: 10/796,987
Filing Date: March 11, 2004
Title: NAIL MAKE-UP COMPOSITION WITH A MIRROR EFFECT
Attorney Docket No.: 08048.0047
Pub. No.: US 2004/0241423 A1
Pub. Date: December 2, 2004

This is a decision on the request for a corrected patent application publication under 37 CFR 1.221(b), filed on February 1, 2005, for the above-identified application.

The request is granted.

Inquiries relating to this matter may be directed to Mark Polutta at (571) 272-7709 (voice).

Mark O. Polutta
Office of Patent Legal Administration
Office of the Deputy Commissioner
for Patent Examination Policy

UNITED STATES PATENT AND TRADEMARK OFFICE

COMMISSIONER FOR PATENTS
UNITED STATES PATENT AND TRADEMARK OFFICE
P.O. BOX 1450
ALEXANDRIA, VA 22313-1450
www.uspto.gov

FOLEY AND LARDNER LLP
SUITE 500
3000 K STREET NW
WASHINGTON, DC 20007

COPY MAILED

FEB 14 2006

OFFICE OF PETITIONS

In re Application of
Hitoshi Irino
Application No. 10/796,999
Filed: March 11, 2004
Attorney Docket No.: 045054-0158

ON PETITION

This is a decision on the petition, filed January 30, 2006, under 37 CFR 1.313(c)(2) to withdraw the above-identified application from issue after payment of the issue fee.

The petition is **GRANTED**.

The above-identified application is withdrawn from issue for consideration of a submission under 37 CFR 1.114 (request for continued examination). See 37 CFR 1.313(c)(2).

Petitioner is advised that the issue fee paid on January 19, 2006, in the above-identified application cannot be refunded. If, however, the above-identified application is again allowed, petitioner may request that it be applied towards the issue fee required by the new Notice of Allowance. [1]

Telephone inquiries relating to this decision should be directed to the undersigned at (571) 272-3204.

The application is being referred to Technology Center AU 2818 for further processing of the request for continued examination under 37 CFR 1.114.

Sherry D. Brinkley
Petitions Examiner
Office of Petitions

[1] The request to apply the issue fee to the new Notice may be satisfied by completing and returning the new Issue Fee Transmittal Form PTOL-85(b), which includes the following language thereon: "Commissioner for Patents is requested to apply the Issue Fee and Publication Fee (if any) or re-apply any previously paid issue fee to the application identified above." Petitioner is advised that, whether a fee is indicated as being due or not, the Issue Fee Transmittal Form **must** be completed and timely submitted to avoid abandonment. Note the language in bold text on the first page of the Notice of Allowance and Fee(s) Due (PTOL-85).

UNITED STATES PATENT AND TRADEMARK OFFICE

COMMISSIONER FOR PATENTS
UNITED STATES PATENT AND TRADEMARK OFFICE
P.O. BOX 1450
ALEXANDRIA, VA 22313-1450
www.uspto.gov

MANELLI DENISON & SELTER
2000 M STREET NW SUITE 700
WASHINGTON, DC 20036-3307

COPY MAILED

SEP 16 2004

OFFICE OF PETITIONS

In re Application of
Saville, et al.
Application No. 10/797,019
Filed: March 11, 2004
Atty. Dkt. No.: 27462
For: ENHANCEMENT OF ENZYME ACTIVITY BY SELECTIVE PURIFICATION

DECISION REFUSING STATUS UNDER 37 CFR 1.47(a)

This decision is in response to the petition under 37 CFR 1.47(a), filed August 17, 2004.

The petition is **DISMISSED**.

Rule 47 applicant is given TWO MONTHS from the mailing date of this decision to reply, correcting the below-noted deficiencies. Any reply should be entitled "Request for Reconsideration of Petition Under 37 CFR 1.47(a)," and should only address the deficiencies noted below, except that the reply may include an oath or declaration executed by the non-signing inventor. Failure to respond will result in abandonment of the application. Any extensions of time will be governed by 37 CFR 1.136(a).

The above-identified application was filed March 11, 2004 without an executed oath or declaration. Accordingly, a Notice to File Missing Parts of Nonprovisional Application was mailed June 1, 2004 requiring, *inter alia*, an executed oath or declaration and a surcharge.

A grantable petition under 37 CFR 1.47(a) requires: (1) proof that the non-signing inventor cannot be reached or refuses to sign the oath or declaration after having been presented with the application papers (specification, claims and drawings); (2) an acceptable oath or declaration in compliance with 35 U.S.C. §§ 115 and 116; (3) the petition fee; and (4) a statement of the last known address of the non-signing inventor.

The instant petition lacks item (1) set forth above. Petitioners have failed to establish that the inventor cannot be reached or refused to sign the oath or declaration after having been presented with the application papers (specification, claims, drawings, and oath or declaration).

Petitioner has provided no evidence that the non-signing inventor received a complete copy of the application papers (**specification, claims, drawings, and oath or declaration**) and thereafter refused to execute the oath or declaration. The affidavit of Andrew Desparats indicates that the applications papers were not mailed to the non-signing inventor. Declarant further indicates that the non-signing inventor on more than one occasion requested he be mailed a copy of the application papers for his review. Declarant also states efforts to schedule a meeting with the non-signing inventor at a location determined by declarant acting on behalf of assignee was unsuccessful.

The fact that the non-signing inventor has not made himself available at the request of petitioners to review the application papers at a location determined by petitioners <u>does not</u> establish a refusal to sign the oath or declaration.

Before a refusal to sign an oath or declaration can be alleged, it must be demonstrated that a *bona fide* effort has been made to present a copy of the application papers (specification, including claims, drawings, and oath or declaration) to the non-signing inventor. Petitioner has failed to establish that the non-signing inventor received a copy of the application papers (specification, claims, drawings, and oath or declaration) and thereafter refused to execute the oath or declaration.

Any renewed petition should be accompanied by evidence to establish that the non-signing inventor was sent a complete copy of the application papers (specification, claims, drawings, and oath or declaration) and thereafter refused to execute the declaration. Petitioner may wish to provide the Office copies of letters sent to the inventor indicating the enclosure of the application papers (specification, claims, drawings, and oath or declaration). If after the inventor receives the application papers and requests to execute the oath or declaration are refused, these facts should be set forth in a statement of facts signed by the person to whom the refusals were made and detailing with specificity the exact manner of the refusals. If a written refusal has been made, a copy of the written refusal should be included on renewed petition.

Further correspondence with respect to this matter should be addressed as follows:

By mail: Mail Stop Petition
Commissioner for Patents
P.O. Box 1450
Alexandria, VA 22313-1450

By facsimile: (703) 872-9306

By hand: Office of Petitions
2201 South Clark Place
Crystal Plaza 4, Suite 3C23
Arlington, VA 22202

Telephone inquiries regarding this decision should be directed to the undersigned at (703) 305-0310. Telephone inquires after September 27, 2004 should be directed to the undersigned at (571) 272-3205.

Alesia M. Brown
Petitions Attorney
Office of Petitions

UNITED STATES PATENT AND TRADEMARK OFFICE

COMMISSIONER FOR PATENTS
UNITED STATES PATENT AND TRADEMARK OFFICE
P.O. BOX 1450
ALEXANDRIA, VA 22313-1450
www.uspto.gov

MANELLI DENISON & SELTER
2000 M STREET NW SUITE 700
WASHINGTON, DC 20036-3307

COPY MAILED

NOV 18 2004

OFFICE OF PETITIONS

In re Application of
Saville, et al.
Application No. 10/797,019
Filed: March 11, 2004
Atty. Dkt. No.: 27462
For: ENHANCEMENT OF ENZYME ACTIVITY BY SELECTIVE PURIFICATION

DECISION GRANTING STATUS UNDER 37 CFR 1.47(a)

This decision is in response to the renewed petition under 37 CFR 1.47(a), filed October 27, 2004.

The petition is **GRANTED**.

Petitioner has shown that inventor Mikhail I. Khavkine has refused to execute the declaration for the above-identified application after having been presented with the application papers.

The above-identified application and papers have been reviewed and found in compliance with 37 CFR 1.47(a). This application is hereby accorded Rule 1.47(a) status.

As provided in Rule 1.47(c), this Office will forward notice of this application's filing to the non-signing inventors at the addresses given in the petition. Notice of the filing of this application will also be published in the Official Gazette.

After this decision is mailed, the above-identified application will be returned to the Office of Initial Patent Examination for further processing.

Telephone inquiries regarding this decision should be directed to the undersigned at (703) 305-0310. Telephone inquires after September 27, 2004 should be directed to the undersigned at (571) 272-3205.

Alesia M. Brown
Petitions Attorney
Office of Petitions

UNITED STATES PATENT AND TRADEMARK OFFICE

COMMISSIONER FOR PATENTS
UNITED STATES PATENT AND TRADEMARK OFFICE
P.O. BOX 1450
ALEXANDRIA, VA 22313-1450
www.uspto.gov

MANELLI DENISON & SELTER
2000 M STREET NW SUITE 700
WASHINGTON, DC 20036-3307

COPY MAILED

OCT 0 7 2004

OFFICE OF PETITIONS

In re Application of	:
Saville, et al.	: DECISION REFUSING STATUS
Application No. 10/797,020	: UNDER 37 CFR 1.47(a)
Filed: March 11, 2004	:
Atty. Dkt. No.: 95772-1440	:
For: ENHANCEMENT OF ENZYME	:
ACTIVITY THROUGH PURIFICATION	:
AND IMMOBILIZATION	:

This decision is in response to the petition under 37 CFR 1.47(a), filed August 17, 2004.

The petition is **DISMISSED**.

Rule 47 applicant is given TWO MONTHS from the mailing date of this decision to reply, correcting the below-noted deficiencies. Any reply should be entitled "Request for Reconsideration of Petition Under 37 CFR 1.47(a)," and should only address the deficiencies noted below, except that the reply may include an oath or declaration executed by the non-signing inventor. Failure to respond will result in abandonment of the application. Any extensions of time will be governed by 37 CFR 1.136(a).

The above-identified application was filed March 11, 2004 without an executed oath or declaration. Accordingly, a Notice to File Missing Parts of Nonprovisional Application was mailed June 1, 2004 requiring an executed oath or declaration and a surcharge.

A grantable petition under 37 CFR 1.47(a) requires: (1) proof that the non-signing inventor cannot be reached or refuses to sign the oath or declaration after having been presented with the application papers (specification, claims and drawings); (2) an acceptable oath or declaration in compliance with 35 U.S.C. §§ 115 and 116; (3) the petition fee; and (4) a statement of the last known address of the non-signing inventor.

The instant petition lacks requirements (1), and (2) set forth above.

As to item (1) set forth above. Petitioners have failed to establish that the non-signing inventor received the application papers (specification, including claims, drawings, and oath or declaration) and thereafter refused requests to execute the declaration. Petitioners allege that the non-signing inventor requested that a copy of the application papers be mailed to him for his review. The petition further indicates that, despite the inventor's request that the application papers be mailed to him, the inventor was required to appear before an Immodazyme employee to review and sign the application papers.

Petitioners are reminded that before a refusal to sign an oath or declaration can be alleged, it must be demonstrated that a *bona fide* effort has been made to present a complete copy of the application papers (specification, including claims, drawings, and oath or declaration) to the non-signing inventor.

Where a refusal of the inventor to sign the application papers is alleged, the circumstances of the presentation of the application papers and of the refusal must be specified in a statement of facts by the person who presented the inventor with the application papers and/or to whom the refusal was made. Proof that a bona fide attempt was made to present a copy of the application papers (specification, including claims, drawings, and oath or declaration) to the non-signing inventor for signature, but the inventor refused to accept delivery of the papers or expressly stated that the application papers should not be sent, may be sufficient.

Petitioners have failed to establish that an attempt was made to present to the non-signing paper a copy of the complete application papers (specification, including claims, drawings, and oath or declaration). Instead, petitioners have refused to mail a copy of the application papers to the inventor for his review and execution.

Any renewed petition should be accompanied by evidence to establish that the non-signing inventor was sent a complete copy of the application papers (specification, claims, drawings, and oath or declaration) and thereafter refused to execute the declaration. Petitioner may wish to provide the Office copies of letters sent to the inventors indicating the enclosure of the application papers (specification, claims, drawings, and oath or declaration). If after the non-signing inventor receives the application papers or refuses to accept the application papers, and requests to execute the oath or declaration are refused,

these facts should be set forth in a statement of facts signed by the person to whom the refusals were made and detailing with specificity the exact manner of the refusals. Petitioners' attention is directed to MPEP 409.03(d) for further guidance.

Further correspondence with respect to this matter should be addressed as follows:

By mail: Mail Stop Petition
Commissioner for Patents
P.O. Box 1450
Alexandria, VA 22313-1450

By facsimile: (703) 308-6916

By hand: U.S. Patent and Trademark Office
2011 South Clark Place
Customer Window, Mail Stop Petition
Crystal Plaza Two, Lobby, Room 1B03
Arlington, VA 22202

Telephone inquiries regarding this decision should be directed to the undersigned at (571) 272-3205.

Alesia M. Brown
Petitions Attorney
Office of Petitions

UNITED STATES PATENT AND TRADEMARK OFFICE

COMMISSIONER FOR PATENTS
UNITED STATES PATENT AND TRADEMARK OFFICE
P.O. BOX 1450
ALEXANDRIA, VA 22313-1450
www.uspto.gov

COPY MAILED

NOV 18 2004

OFFICE OF PETITIONS

MANELLI DENISON & SELTER
2000 M STREET NW SUITE 700
WASHINGTON, DC 20036-3307

In re Application of	:
Saville, et al.	: DECISION GRANTING STATUS
Application No. 10/797,020	: UNDER 37 CFR 1.47(a)
Filed: March 11, 2004	:
Atty. Dkt. No.: 95772-1440	:
For: ENHANCEMENT OF ENZYME	:
ACTIVITY THROUGH PURIFICATION	:
AND IMMOBILIZATION	:

This decision is in response to the renewed petition under 37 CFR 1.47(a), filed October 27, 2004.

The petition is **GRANTED**.

Petitioner has shown that inventor Mikhail I. Khavkine has refused to execute the declaration for the above-identified application after having been presented with the application papers.

The above-identified application and papers have been reviewed and found in compliance with 37 CFR 1.47(a). This application is hereby accorded Rule 1.47(a) status.

As provided in Rule 1.47(c), this Office will forward notice of this application's filing to the non-signing inventors at the addresses given in the petition. Notice of the filing of this application will also be published in the Official Gazette.

After this decision is mailed, the above-identified application will be returned to the Office of Initial Patent Examination for further processing.

Telephone inquiries regarding this decision should be directed to the undersigned at (703) 305-0310. Telephone inquires after September 27, 2004 should be directed to the undersigned at (571) 272-3205.

Alesia M. Brown
Petitions Attorney
Office of Petitions

UNITED STATES PATENT AND TRADEMARK OFFICE

Commissioner for Patents
United States Patent and Trademark Office
P.O. Box 1450
Alexandria, VA 22313-1450
www.uspto.gov

Joseph W. Berenato, III
Liniak, Berenato & White, LLC
6550 Rock Spring Drive, Suite 240
Bethesda MD 20817

COPY MAILED
AUG 22 2006
OFFICE OF PETITIONS

In re Application of	:	
Bernd **LOIBL**	:	
Application No. 10/797,024	:	DECISION ON PETITION
Filed: March 11, 2004	:	TO WITHDRAW
Attorney Docket No. 26240.140	:	FROM RECORD
	:	

This is a decision on the Request to Withdraw as attorney or agent of record under 37 C.F.R. § 1.36(b), filed January 5, 2006.

The request is **APPROVED**.

A grantable request to withdraw as attorney/agent of record must be signed by every attorney/agent seeking to withdraw or contain a clear indication that one attorney is signing on behalf of another/others. A request to withdraw will not be approved unless at least 30 (thirty) days would remain between the date of approval and the later of the expiration date of a time to file a response or the expiration date of the maximum time period which can be extended under 37 C.F.R. § 1.136(a).

The request was signed by Thomas P. Liniak. Thomas P. Liniak has been withdrawn as attorney or agent of record; all other attorneys remain of record. Applicant is reminded that there is no attorney of record at this time. The correspondence address of record remains unchanged.

Telephone inquiries concerning this decision should be directed to Monica A. Graves at 571-272-7253.

David Bucci
Petitions Examiner
Office of Petitions

UNITED STATES PATENT AND TRADEMARK OFFICE

Commissioner for Patents
United States Patent and Trademark Office
P.O. Box 1450
Alexandria, VA 22313-1450
www.uspto.gov

Liniak, Berenato & White
6550 Rock Spring Drive
Suite 240
Bethesda, MD 20817

COPY MAILED
MAY 15 2006
OFFICE OF PETITIONS

In re Application of	:	
Akito Takegawa	:	
Application No. 10/797,025	:	DECISION ON PETITION
Filed: March 11, 2004	:	TO WITHDRAW
Attorney Docket No. 01203.081	:	FROM RECORD
	:	

This is a decision on the Request to Withdraw as attorney or agent of record under 37 C.F.R. § 1.36(b), filed January 5, 2006.

The request is **APPROVED**.

A grantable request to withdraw as attorney/agent of record must be signed by every attorney/agent seeking to withdraw or contain a clear indication that one attorney is signing on behalf of another/others. A request to withdraw will not be approved unless at least 30 (thirty) days would remain between the date of approval and the later of the expiration date of a time to file a response or the expiration date of the maximum time period which can be extended under 37 C.F.R. § 1.136(a).

Thomas P. Liniak has been withdrawn as attorney or agent; all other attorney remain of record.

Telephone inquiries concerning this decision should be directed to Cheryl Gibson-Baylor at (571)272-3213.

Cheryl Gibson-Baylor
Petitions Examiner
Office of Petitions

Conferee: Denise Pothier

UNITED STATES PATENT AND TRADEMARK OFFICE

COMMISSIONER FOR PATENTS
UNITED STATES PATENT AND TRADEMARK OFFICE
P.O. BOX 1450
ALEXANDRIA, VA 22313-1450
www.uspto.gov

MAIL

JUL 13 2005

DIRECTOR OFFICE
TECHNOLOGY CENTER 2100

MATTINGLY, STANGER, MALUR & BRUNDIDGE, P.C.
1800 DIAGONAL ROAD
SUITE 370
ALEXANDRIA VA 22314

In re Application of: ACHIWA
Application No. 10/797,052
Filed: March 11, 2004
For: CONTROL METHOD FOR STORAGE SYSTEM, STORAGE SYSTEM, AND STORAGE DEVICE

DECISION ON PETITION
TO MAKE SPECIAL
(ACCELERATED EXAMINATION)
UNDER M.P.E.P. §708.02 (VIII)

This is a response to the petition filed 13 April 2005 and supplemented by the further submission of 10 June 2005 under 37 C.F.R. §1.102(d) and M.P.E.P. §708.02 (VIII): Accelerated Examination, to make the above-identified application special.

The Petition is **DISMISSED**.

M.P.E.P. §708.02, Section VIII which sets out the prerequisites for a grantable petition for Accelerated Examination under 37 C.F.R. §1.102(d) states in relevant part:

A new application (one which has not received any examination by the examiner) may be granted special status provided that applicant (and this term includes applicant's attorney or agent) complies with each of the following items:

(a) Submits a petition to make special accompanied by the fee set forth in **37 CFR 1.17(h)**;

(b) Presents all claims directed to a single invention, or if the Office determines that all the claims presented are not obviously directed to a single invention, will make an election without traverse as a prerequisite to the grant of special status;

(c) Submits a statement(s) that a pre-examination search was made, listing the field of search by class and subclass, publication, Chemical Abstracts, foreign patents, etc. The pre-examination search must be directed to the invention as claimed in the application for which special status is requested. A search made by a foreign patent office satisfies this requirement;

(d) Submits one copy each of the references deemed most closely related to the subject matter encompassed by the claims if said references are not already of record; and

(e) Submits a detailed discussion of the references, which discussion points out, with the particularity required by 37 CFR 1.111 (b) and (c), how the claimed subject matter is patentable over the references.

In those instances where the request for this special status does not meet all the prerequisites set forth above, **applicant will be notified and the defects in the request will be stated**. The application will remain in the status of a new application awaiting action in its regular turn. In those instances where a request is defective in one or more respects, applicant will be given one opportunity to perfect the request in a renewed petition to make special. If perfected, the request will then be granted. If not perfected in the first renewed petition, any additional renewed petitions to make special may or may not be considered at the discretion of the Technology Center (TC) Special Program Examiner.

The petition filed 13 April 2005 and supplemented on 10 June 2005 fails to adequately meet requirement (e) of the criteria set forth above. The discussion of the references does not point out with the particularity required by 37 CFR 1.111(b) and (c) how the claimed subject matter is patentable over the references.

The petition identifies a feature of each independent claim (i.e., a first feature of independent claim 1, . . ., a fourth feature of independent claim 18). However, in identifying this feature, the discussion states that the references "fail to disclose or suggest [the identified feature] *in combination* with the other limitations recited in the claims" (emphasis added). It is also stated in the discussion of each reference that the reference "does not disclose or suggest" the identified feature for each independent claim "*in combination* with the other limitations recited in each of the independent claims". (emphasis added). In effect, the discussion states that the *entirety* of the four independent claims is not disclosed by the eight references purported to be most closely related. Such a statement is not a sufficient detailed description. Applicants may wish to consider deleting the portions of the discussion that indicate that the identified features *in combination* with the other limitations are not disclosed by the references. Also, it is suggested that if the identical statement is being made to distinguish each reference from the claims, as in the supplemental petition, then the statement should simply be made once in the petition. (E.g., "None of the references disclose . . . .")

The discussion also states that, for seven of the eight references deemed most closely related, the reference fails to disclose "that a second storage device requests first information from a first storage device indicating that a replication of data written in the first storage area has not yet been transmitted to a second storage area when notice of failover is received from a second information processing device." However, it is unclear what is intended by the discussion of this particular feature when this feature does not even appear in any of the independent claims. (All of the independent claims specify that the replication of data has not yet been transmitted to a second storage *device* rather than a second storage area. Claims 8, 15, and 18 refer to a "channel controller" rather than a "second storage device". Claims 15 and 18 refer to "the other storage device" rather than "the first storage device". Claim 18 contains additional inconsistencies.)

Petition to Make Special **DISMISSED**.

Petitioner is given one opportunity to perfect the petition. Any request for reconsideration must be filed within TWO MONTHS of the mail date of this decision.

Until the renewed petition is submitted, the application will be returned to the examiner's docket to await treatment on the merits in the normal order of examination.

Pinchus M. Laufer
Special Program Examiner
Technology Center 2100
Computer Architecture, Software and Information Security
571-272-3599

ds

UNITED STATES PATENT AND TRADEMARK OFFICE

COMMISSIONER FOR PATENTS
UNITED STATES PATENT AND TRADEMARK OFFICE
P.O. BOX 1450
ALEXANDRIA, VA 22313-1450
www.uspto.gov

MAILED

NOV - 8 2005

Technology Center 2100

MATTINGLY, STANGER, MALUR & BRUNDIDGE, P.C.
1800 DIAGONAL ROAD
SUITE 370
ALEXANDRIA VA 22314

In re Application of: ACHIWA
Application No. 10/797,052
Filed: March 11, 2004
For: CONTROL METHOD FOR STORAGE SYSTEM, STORAGE SYSTEM, AND STORAGE DEVICE

DECISION ON PETITION
TO MAKE SPECIAL
(ACCELERATED EXAMINATION)
UNDER M.P.E.P. §708.02 (VIII)

This is a response to the renewed petition filed 24 August 2005, under 37 C.F.R. §1.102(d) and M.P.E.P. §708.02 (VIII): Accelerated Examination, to make the above-identified application special.

The renewed petition was filed in response to a dismissal of the original petition filed 13 April 2005 and supplemented by the further submission of 10 June 2005. The petition was dismissed for failure to provide a detailed discussion of the references, which discussion points out with the particularity required by 37 CFR 1.111(b) and (c), how the claimed subject matter is patentable over the references.

Applicants' submission filed 24 August 2005 corrects the deficiency noted in the original decision. The combined submissions meet all the criteria set out above. Accordingly, the petition is **GRANTED**.

The application file is being forwarded to the Examiner of Record for accelerated examination according to the procedures set forth in MPEP § 708.02, Section VIII.

Pinchus M. Laufer
Special Program Examiner
Technology Center 2100
Computer Architecture, Software and Information Security
571-272-3599

ds

UNITED STATES PATENT AND TRADEMARK OFFICE

Commissioner for Patents
United States Patent and Trademark Office
P.O. Box 1450
Alexandria, VA 22313-1450
www.uspto.gov

Davidson Berquist Klima & Jackson, LLP
4501 North Fairfax Drive
Suite 920
Arlington, VA 22313-1450

MAILED

OCT 01 2004

Technology Center 2100

In re Application of:
Bruno SCHIAVI, et al.
Application No. 10/797,058
Filed: March 11, 2004
For: A DEVICE FOR CHECKING THE POSITION OF A SPINDLE IN A MACHINE TOOL

DECISION ON REQUEST TO WITHDRAW AS ATTORNEY OR AGENT

This is a decision on the Request to Withdraw from Representation filed July 21, 2004.

A grantable request to withdraw as attorney of record should indicate thereon the present mailing addresses of the attorney(s) who is/are withdrawing from the record and of the applicant. The request for withdrawal must be signed by every attorney seeking to withdraw or contain a clear indication that one attorney is signing on behalf of another/others. A request to withdraw will not be approved unless at least 30 (thirty) days would remain between the date of approval and the later of the expiration date of a time to file a response or the expiration date of the maximum time period which can be extended under 37 C.F.R. § 1.136(a). The effective date of withdrawal being the date of decision and not the date of request. See M.P.E.P. § 402.06. 37 C.F.R. § 1.36 further requires that the applicant or patent owner be notified of the withdrawal of the attorney or agent.

The request is **GRANTED.**

All future communications from the Office will be directed to the below-listed address until otherwise notified by applicant. This correspondence address is provided by the withdrawn attorney(s). Applicant is reminded of the obligation to promptly notify the Patent and Trademark Office (Office) of any change in correspondence address to ensure receipt of all communications from the Office.

for Vincent N. Trans
Special Program Examiner
Technology Center 2100
Computer Architecture, Software, and
Information Security
703-305-9750

cc: Timothy J. Klima, Esq.
Harbin King & Klima
500 Ninth Street SE
Washington DC 20003

UNITED STATES PATENT AND TRADEMARK OFFICE

Commissioner for Patents
United States Patent and Trademark Office
P.O. Box 1450
Alexandria, VA 22313-1450
www.uspto.gov

G. Link Co., Ltd
3550 Bell Road
Minooka, IL 60447

COPY MAILED

FEB 27 2007

OFFICE OF PETITIONS

In re Application of Tzu-Chen Yu :
Application No. 10/797,067 : Letter
Filing Date: March 11, 2004 :
For: Glue Tape Cutter :

This is a reply to the letter filed September 5, 2006, requesting correction of the spelling of the inventor's name.

The request is granted.

The spelling of the inventor's name is now shown correctly in Office records Tzu-Chen Yu.

The Office of Publications will be informed the inventor's name has been corrected and will issue the instant application as a patent in due course.

Telephone inquiries regarding this communication should be directed to Petitions Attorney Steven Brantley at (571) 272-3203.

Charles Steven Brantley
Senior Petitions Attorney
Office of Petitions

UNITED STATES PATENT AND TRADEMARK OFFICE

Commissioner for Patents
United States Patent and Trademark Office
P.O. Box 1450
Alexandria, VA 22313-1450
www.uspto.gov

JEFFREY M. MEASURES
BORDEN LADNER GERVAIS LLP
WORLD EXCHANGE PLAZA
100 QUEEN STREET, SUITE 1100
OTTAWA, ONTARIO, KIP I-J9
CANADA

COPY MAILED

SEP 20 2007

OFFICE OF PETITIONS

In re Application of	:	
Dominic John GOODWILL, et al	:	
Application No. 10/797,071	:	DECISION ON PETITION
Filed: March 11, 2004	:	
Attorney Docket No. PAT 3178-2	:	

This is a decision on the petition under the unintentional provisions of 37 CFR 1.137(b), filed July 10, 2007, to revive the above-identified application.

The petition is **GRANTED**.

This application became abandoned for failure to timely pay the issue and publication fees on or before June 28, 2007, as required by the Notice of Allowance and Fee(s) Due, mailed March 28, 2007. Accordingly, the date of abandonment of this application is June 29, 2007 .

The petition satisfies the requirements of 37 CFR 1.137(b) in that petitioner has supplied (1) the reply in the form of payment of the issue fee of $1,400, (2) the petition fee of $1,500; and (3) a proper statement of unintentional delay.

Telephone inquiries concerning this decision should be directed to Diane Goodwyn at (571) 272-6732.

This application is being referred to Publishing Division for processing into a patent.

April Wise
Petitions Examiner
Office of Petitions

UNITED STATES PATENT AND TRADEMARK OFFICE

Commissioner for Patents
United States Patent and Trademark Office
P.O. Box 1450
Alexandria, VA 22313-1450
www.uspto.gov

7-20-07

wk

In re Application of	:	
Chen et al.	:	
Serial Number: 10/797,111	:	DECISION
Filed: March 11, 2004	:	ON
For: Inter Layers For Perpendicular Recording Media	:	PETITION

This is in response to the request filed March 30, 2007, requesting permission for withdrawal as attorney from the above-identified application.

The Commissioner of Patents and Trademarks requires that there be at least 30 days between approval of withdrawal and the later of the expiration date of a time period for reply or the expiration date of the period which can be obtained by a petition and fee for extension of time under 37 CFR 1.136(a). This is so that the applicant will have sufficient time to obtain other representation or take other action. If a period has been set for reply and the period may be extended without a showing of cause pursuant to 37 CFR 1.136(a) by filing a petition for extension of time and fee, the practitioner will not be required to seek such extension of time for withdrawal to be approved. In such a situation, however, withdrawal will not be approved unless at least 30 days would remain between the date of approval and the last date on which such a petition for extension of time and fee could properly be filed.

In this case there is less than thirty days between approval of withdrawal of the current attorney of record and the expiration date of a time response period.

The Request is **Denied**.

Jacqueline M. Stone

Jacqueline Stone, Director
Technology Center 1700
Chemical and Materials Engineering

Peter J. Davis
MORRISON & FOERSTER LLP
1650 TYSONS BOULEVARD
SUITE 400
MCLEAN VA 22102

UNITED STATES PATENT AND TRADEMARK OFFICE

Commissioner for Patents
United States Patent and Trademark Office
P.O. Box 1450
Alexandria, VA 22313-1450
www.uspto.gov
DIW Dec-05

SHLESINGER, ARKWRIGHT & GARVEY LLP
1420 KING STREET
SUITE 600
ALEXANDRIA VA 22314

COPY MAILED

DEC 13 2005

OFFICE OF PETITIONS

In re Application of	:	
Robert G. McGuiness	:	DECISION ON PETITION
Application No. 10/797,120	:	TO WITHDRAW
Filed: 11 March, 2004	:	HOLDING OF ABANDONMENT
Atty Docket No. 7049-1	:	

This is a decision on the petition filed 19 January, 2005, requesting withdraw the holding of abandonment of the above-identified application.

The Office apologizes for the delay in responding to the present petition.

This application was held abandoned for failure to respond in a timely manner to the non-final Office action mailed 29 June, 2004. Notice of Abandonment was mailed on 12 January, 2005.

Petitioner asserts that a proper response was timely filed. In support of the petition, petitioner submits a copy of a postcard receipt date-stamped 29 December, 2004, acknowledging receipt of a response (4 pages) and a check in the amount of $510.00 (the small entity fee for a three (3) month extension of time). A copy of the amendment is included with the present petition.

A review of the record reveals that the response, a request for reconsideration of the non-final rejection and three (3) month extension of time fee, both received on 29 December, 2004, is located therein. As such, the showing is that a response was timely filed, and that the Notice of Abandonment was mailed in error.

For the reasons stated above, the Notice of Abandonment is hereby vacated and the holding of abandonment withdrawn.

The petition is **GRANTED**.

The application file will be referred to Technology Center Art Unit 3722 technical support staff for entry of the response. Thereafter, the application file will be forwarded to the examiner for action in due course.

Telephone inquiries concerning this matter may be directed to the undersigned at (571)272-3231.

Douglas I. Wood
Senior Petitions Attorney
Office of Petitions